GENERAL NOTES

1. Pavement contraction joints shall be extended through the concrete shoulder in the gore areas.

(2) Shoulder corrugations shall be omitted in this area.

(3) Any required additional length of L above the 600′ minimum shall be added to the length of this parallel lane segment. (Example: required L = 700′ then this parallel lane segment length = 400′)

4. See tables on Standard Drawing E 401-REBS-04.

5. See Standard Drawing E 401-REBS-03 for Section B-B.

CURVE DATA

△ = 3° 00′ 00″
R = 2864.79′
T = 75.02′
L = 150.0′
E = 0.98′

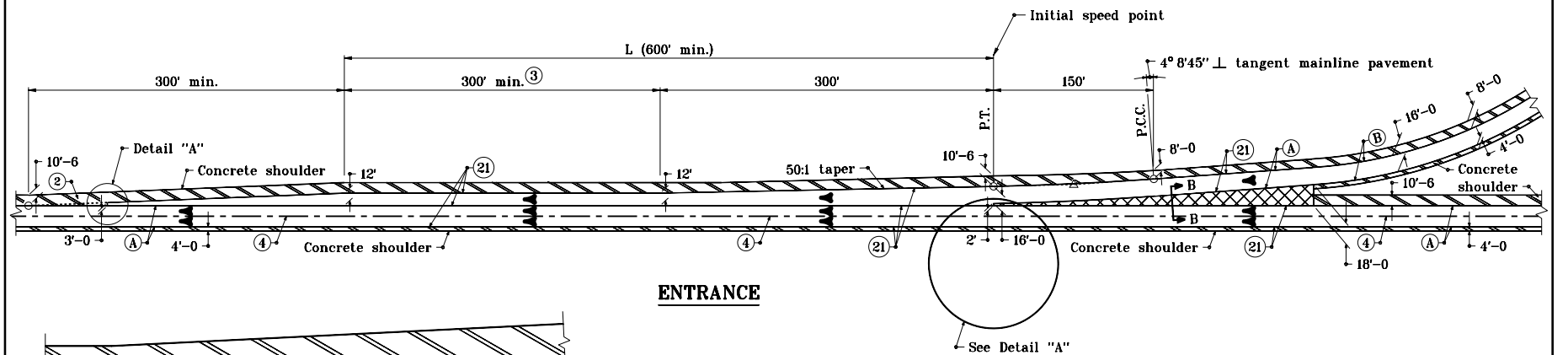

ENTRANCE

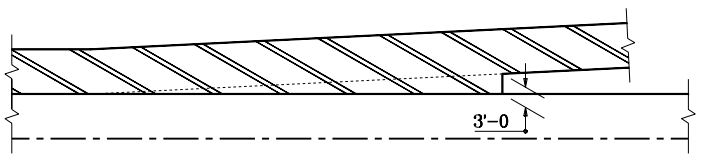

DETAIL "A"

LEGEND

(A) Pavement type and thickness as specified for the mainline.
(B) Pavement type and thickness as specified for ramps.
(4) Longitudinal joint
(21) Longitudinal construction joint
Concrete shoulder (Thickness of mainline pavement)
Concrete shoulder (Thickness as specified on Typical Sections)

INDIANA DEPARTMENT OF TRANSPORTATION

RAMP ENTRANCE TERMINAL CONCRETE SHOULDER

SEPTEMBER 2000

STANDARD DRAWING NO. **E 501-RECS-01**

ANTHONY L. UREMOVICH REGISTERED No. 18095 STATE OF INDIANA PROFESSIONAL ENGINEER
DESIGN STANDARDS ENGINEER

/s/ Anthony L. Uremovich 9-01-00
DESIGN STANDARDS ENGINEER DATE

/s/ Firooz Zandi 9-01-00
CHIEF HIGHWAY ENGINEER DATE