GENERAL NOTES

(1) Required additional length of L above the 600′ minimum shall be added to the length of this parallel lane segment. (Example: If required L = 720′, then this parallel lane segment length = 420′). See tables on Standard Drawing E 401-REBS-04.

(2) Ear construction type A: 2 lines of #5 bars required (Est. weight = 255 lb). Transverse sawed and sealed joint, in line with pavement contraction joint, shall extend through ear construction. The #5 bars shall be discontinued at such joints. See Detail B-B.

3. See Standard Drawing E 401-REBS-03 for Section B-B.

CURVE DATA

R = 2864.79′
△ = 3°00′00″
T = 75.02′
L = 150′
E = 0.98′

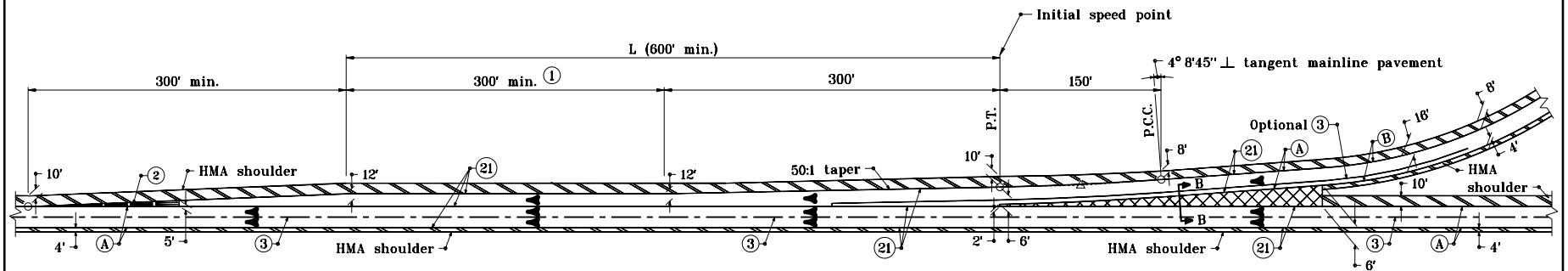

ENTRANCE

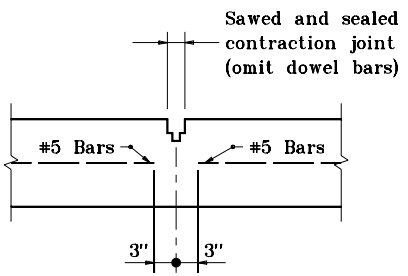

DETAIL B-B

LEGEND

(A) Pavement type and thickness as specified for the mainline.
(B) Pavement type and thickness as specified for ramps.
(3) Longitudinal joint
(21) Longitudinal construction joint
HMA shoulder (Thickness of mainline pavement)
HMA shoulder (Thickness as specified on Typical Sections)

INDIANA DEPARTMENT OF TRANSPORTATION

RAMP ENTRANCE TERMINAL HMA SHOULDER

SEPTEMBER 1999

STANDARD DRAWING NO. **E 401-REBS-01**

ANTHONY L. UREMOVICH REGISTERED No. 18095 STATE OF INDIANA PROFESSIONAL ENGINEER

DESIGN STANDARDS ENGINEER

DETAILS PLACED IN THIS FORMAT	11-15-99
/s/ Anthony L. Uremovich DESIGN STANDARDS ENGINEER	11-15-99 DATE
/s/ Firooz Zandi CHIEF HIGHWAY ENGINEER	11-15-99 DATE
ORIGINALLY APPROVED	9-01-99