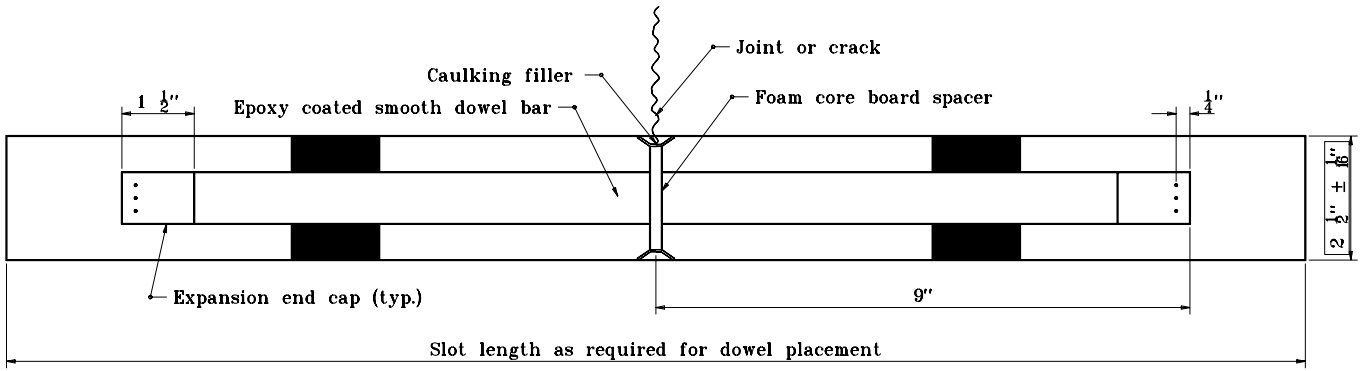

PLAN

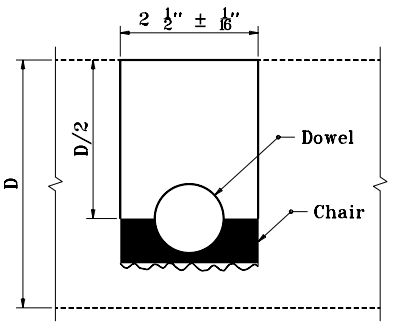

SECTION A–A

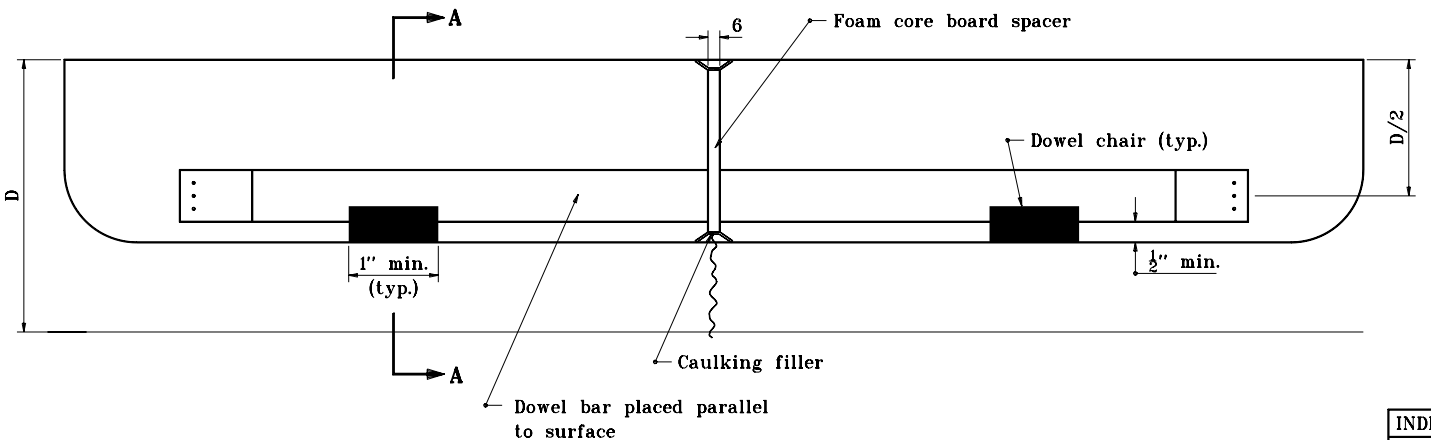

ELEVATION

NOTES:

1. For dowel slot layout requirements, see Standard Drawing E 305–RLTC–02.

DOWEL BAR SIZES	
Pavement Thickness D	Minimum Dowel Bar Diameter
Less than 12"	1 1/4"
Greater than or equal to 12"	1 1/2"

DOWEL SLOT DETAILS

INDIANA DEPARTMENT OF TRANSPORTATION

RETROFIT LOAD TRANSFER FOR PCCP

SEPTEMBER 1999

STANDARD DRAWING NO. **E 305–RLTC–01**

ANTHONY L. UREMOVICH REGISTERED No. 18095 STATE OF INDIANA PROFESSIONAL ENGINEER

DESIGN STANDARDS ENGINEER

/s/ Anthony L. Uremovich 9–01–99
DESIGN STANDARDS ENGINEER DATE

/s/ Donald W. Lucas 9–01–99
CHIEF HIGHWAY ENGINEER DATE