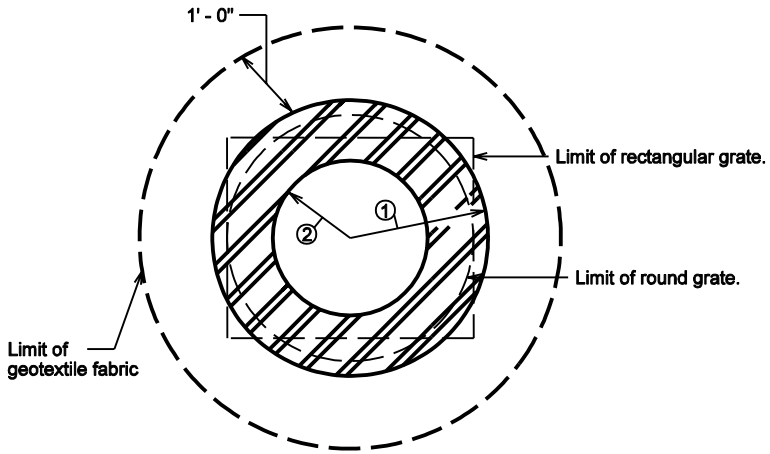

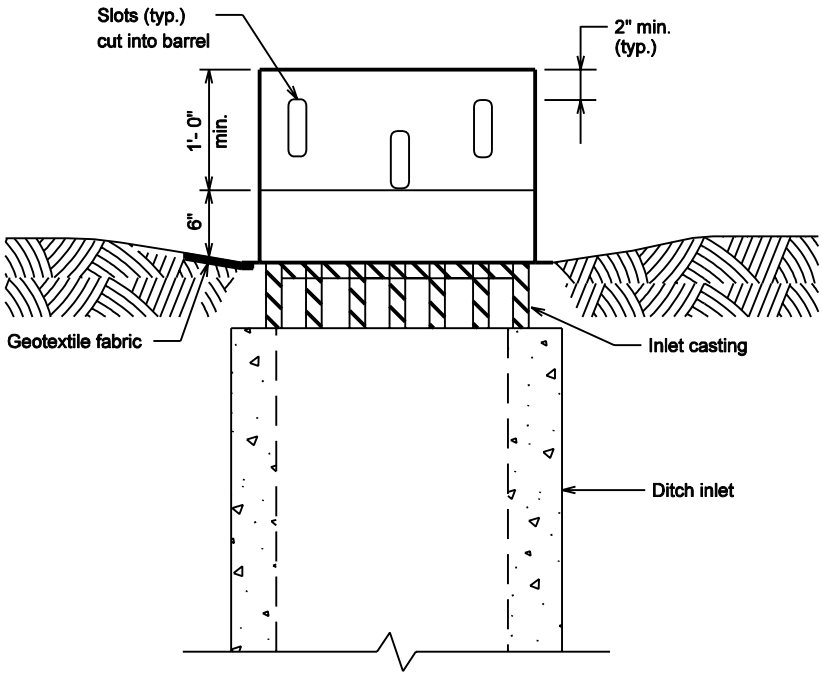

GENERAL NOTES

① Radius shall be equal to or greater than that of a round casting grate, or equal to, or greater than half of the longer length of a rectangular grate.

② Distance shall be greater than half of the radius of a round grate, or greater than one-quarter of the shorter length of a rectangular grate.

3 Slots shall be 5" min. height by 1" min. width.

INDIANA DEPARTMENT OF TRANSPORTATION

TEMPORARY DITCH INLET PROTECTION SLOTTED BARREL

MARCH 2002

STANDARD DRAWING NO. E 205-TECI-03

RICHARD L. VanCLEAVE REGISTERED No. 9750 STATE OF INDIANA PROFESSIONAL ENGINEER

DESIGN STANDARDS ENGINEER

/s/ Richard L. VanCleave — DESIGN STANDARDS ENGINEER — 3-01-02 DATE

/s/ Richard K. Smutzer — CHIEF HIGHWAY ENGINEER — 3-01-02 DATE