NOTES:

1. The frame shall be wrapped with one continuous piece of geotextile fabric, and a 2'–0 overlap shall be provided.

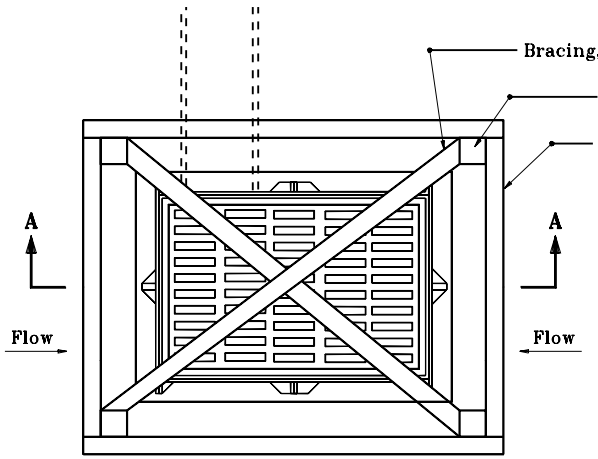

PLAN VIEW

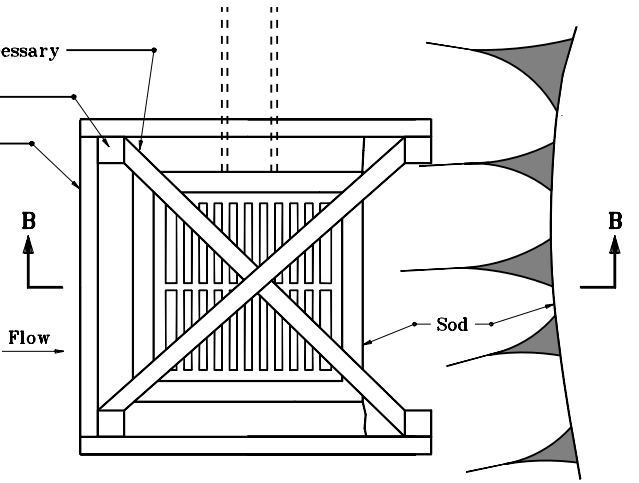

PLAN VIEW

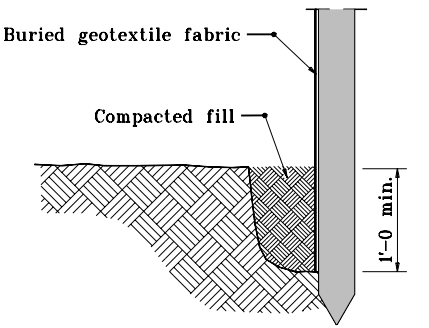

TRENCH DETAIL

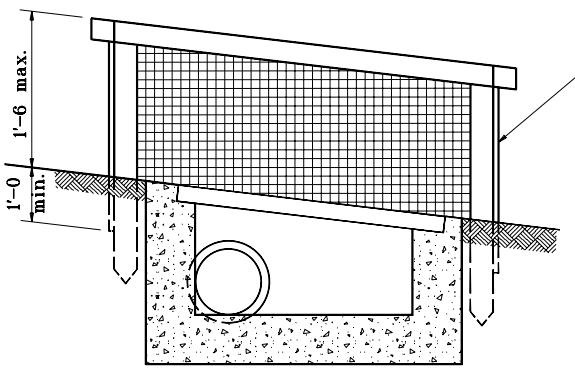

SECTION A–A

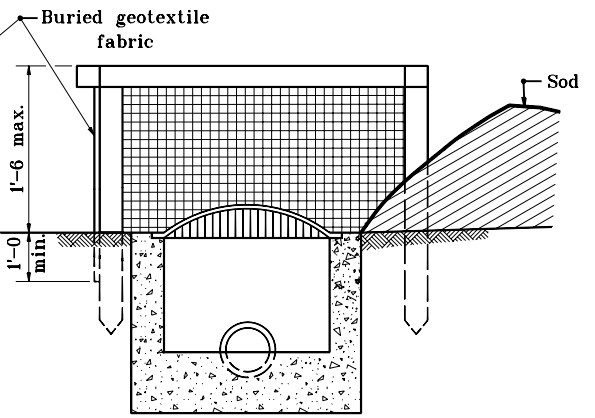

SECTION B–B

INDIANA DEPARTMENT OF TRANSPORTATION

TEMPORARY DITCH INLET PROTECTION, GEOTEXTILE BOX

MARCH 2002

STANDARD DRAWING NO. **E 205–TECI–02**

RICHARD L. VanCLEAVE REGISTERED No. 9750 STATE OF INDIANA PROFESSIONAL ENGINEER

DESIGN STANDARDS ENGINEER

/s/ Richard L. VanCleave — DESIGN STANDARDS ENGINEER — 3–01–02 DATE

/s/ Richard Smutzer — CHIEF HIGHWAY ENGINEER — 3–01–02 DATE