IDEM

INDIANA DEPARTMENT OF ENVIRONMENTAL MANAGEMENT

We Protect Hoosiers and Our Environment.

Mitchell E. Daniels Jr.
Governor

Thomas W. Easterly
Commissioner

100 North Senate Avenue
Indianapolis, Indiana 46204
(317) 232-8603
Toll Free (800) 451-6027
www.idem.IN.gov

September 6, 2012

VIA CERTIFIED MAIL 91 7190 0005 2710 0023 2564

Mr. William L. G. Etzler,
Vice President and General Manager
Utility Center, Inc. d/b/a Aqua Indiana, Inc.
1111 West Hamilton Road South
Fort Wayne, Indiana 46814

Dear Mr. Etzler:

Re: 327 IAC 3 Construction Permit Application
Plans and Specifications for Braemar Pump Station & Force Main and Aboite Diversion Force Main
Permit Approval No. 20451
Fort Wayne, Indiana
Allen County

The application, plans and specifications, and supporting documents for the above-referenced project have been reviewed and processed in accordance with rules adopted under 327 IAC 3. Enclosed is the Construction Permit (Approval No. 20451), which applies to the construction of the above-referenced proposed sanitary sewer system to be located in Allen County. A new sanitary sewer lift station will be constructed along the west side of Braemar Drive approximately 2,800 feet north of its intersection with Covington Road. A new sanitary sewer force main will be constructed along the west side of Braemar Drive starting from the new lift station and ending along the north side of Covington Road approximately 900 feet west of its intersection with Eggeman Road. A second sanitary sewer force main will be constructed starting near the existing Sycamore Hills Sanitary Sewer Lift Station located along the north side of Covington Road approximately 900 feet west of its intersection with Eggeman Road and ending at the Utility Center, Inc, - Midwest Semipublic Wastewater Treatment Plant located at 6811 Engle Road.

Please review the enclosed permit carefully and become familiar with its terms and conditions. In addition, it is imperative that the applicant, consulting architect/engineer (A/E), inspector, and contractor are aware of these terms, conditions, and reporting and testing requirements.

It should be noted that any person affected or aggrieved by the agency's decision in authorizing the construction of the above-referenced facility may, within fifteen (15) days from date of mailing, appeal this permit by filing a request with the Office of Environmental Adjudication for an adjudicatory hearing in accordance with IC 4-21.5-3-7 and IC 13-15-6. The procedure for appeal is outlined in more detail in Part III of the attached construction permit.

Plans and specifications were prepared by DLZ Indiana, certified by Mr. Casey M. Erwin, P.E., and submitted for review on July 3, 2012 with additional information submitted on August 21, August 24 and August 28, 2012.

Any questions concerning this permit may be addressed to Mr. Mike Miles, P.E., of our staff, at 317/232-6548. Questions concerning appeal procedures should be addressed to the Office of Environmental Adjudication, at 317/232-8591.

Sincerely,

Dale T. Schnaith, Chief
Facility Construction and
Engineering Support Section
Office of Water Quality

Project No. SP-1413
Enclosures
cc: Allen County Health Department
Allen County Commissioner
DLZ Indiana

INDIANA DEPARTMENT OF ENVIRONMENTAL MANAGEMENT
AUTHORIZATION FOR CONSTRUCTION OF
SANITARY SEWER SYSTEM
UNDER 327 IAC 3

DECISION OF APPROVAL

Utility Center, Inc. d/b/a Aqua Indiana, Inc. in accordance with the provisions of IC 13-15 and 327 IAC 3 is hereby issued a permit to construct the sanitary sewer system to be located in Allen County. A new sanitary sewer lift station will be constructed along the west side of Braemar Drive approximately 2,800 feet north of its intersection with Covington Road. A new sanitary sewer force main will be constructed along the west side of Braemar Drive starting from the new lift station and ending along the north side of Covington Road approximately 900 feet west of its intersection with Eggeman Road. A second sanitary sewer force main will be constructed starting near the existing Sycamore Hills Sanitary Sewer Lift Station located along the north side of Covington Road approximately 900 feet west of its intersection with Eggeman Road and ending at the Utility Center, Inc, - Midwest Semipublic Wastewater Treatment Plant located at 6811 Engle Road. The permittee is required to comply with requirements set forth in Parts I, II and III hereof. The permit is effective pursuant to IC 4-21.5-3-4(d). If a petition for review and a petition for stay of effectiveness are filed pursuant to IC 13-15-6, an Environmental Law Judge may be appointed for an adjudicatory hearing. The force and effect of any contested permit provision may be stayed at that time.

NOTICE OF EXPIRATION DATE

This permit and the authorization to initiate construction of this sanitary sewer system shall expire at midnight October 1, 2013. In order to receive authorization to begin construction beyond the date of expiration, the permittee shall submit such information and forms as are required by the Indiana Department of Environmental Management at least sixty (60) days prior to the expiration date.

Signed this 6th day of September, 2012, for the Indiana Department of Environmental Management.

Dale T. Schnaith, Chief
Facility Construction and
Engineering Support Section
Office of Water Quality

SANITARY SEWER SYSTEM DESCRIPTION

The proposed project shall consist of approximately 29 feet of 21-inch diameter PVC ASTM F679 sanitary sewer and one (1) new sanitary sewer lift station located near the west side of Braemar Drive approximately 2,800 feet north of its intersection with Covington Road. The new Braemar Drive Lift Station shall consist of two (2) submersible pumps each with an expected capacity of 1,400 GPM at approximately 145 feet of total dynamic head (TDH). The expected combined capacity of two (2) pumps running together in parallel at the new lift station is 1,850 GPM at 174 feet of TDH. The existing average daily wastewater flow that will be diverted into the new 29-inch diameter sanitary sewer and into the new Braemar Drive Lift Station is approximately 396,000 GPD.

The proposed project shall also consist of:

- Approximately 3,346 feet of 12-inch diameter PVC (AWWA C900 DR-18) sanitary sewer force main to be installed by open cut.

- Approximately 620 feet of 12-inch diameter PVC ((AWWA C900 DR-18 (made with thermal butt fused joints)) sanitary sewer force main to be installed by horizontal directional drilling which is approved as an alternative to the State Technical Standards per the State Rule 327 IAC 3-6-32.

- Approximately 23,339 feet of 18-inch diameter PVC (AWWA C905 DR-21) sanitary sewer force main to be installed by open cut.

- Approximately 1,215 feet of 18-inch diameter PVC ((AWWA C905 DR-21 (made with fused joints)) sanitary sewer force main to be installed by horizontal directional drilling which is approved as alternative to the State Technical Standards per the State Rule 327 IAC 3-6-32.

- A Vortex Flow Structure to be connected to the terminal discharge end of the new 18-inch diameter force main. The Vortex Flow Structure will be located near the headworks of the Midwest Semipublic Wastewater Treatment Plant and it has a design flow range of 0.50 MGD to 4.0 MGD.

The new 12-inch diameter PVC sanitary sewer force main will extend south from the new lift station along the west side of Braemar Drive to the intersection with Covington Road and then extend east along the north side of Covington Road. The new

12-inch diameter force main will end near the existing Sycamore Hills Sanitary Sewer Lift Station that is located approximately 900 feet west of its intersection with Eggeman Road. The existing Sycamore Hills Lift Station does not have the capacity for the additional peak wastewater flow from the new Braemar Drive Lift Station. The new Braemar Drive Lift Station will be connected to the new 18-inch diameter PVC sanitary sewer force main along the north side of Covington Road next to the existing Sycamore Hills Lift Station.

The existing Sycamore Hills Lift Station will be re-connected to the new 18-inch diameter force main. The existing 8-inch diameter force main that is connected to the Sycamore Hills Lift Station will be plugged and abandoned in place upon project completion. The two (2) existing submersible pumps at the Sycamore Hill Lift Station will remain in service and will each have an expected capacity of 1,750 GPM at approximately 116 feet of TDH based on their connection to the new 18-inch diameter force main.

Simultaneous operation of both lift stations is possible and can include a maximum of two (2) pumps at the new Braemar Drive Lift Station and one (1) pump at the existing Sycamore Hills Lift Station. The expected combined capacity of two (2) pumps running together in parallel at the new Braemar Drive Lift Station is 1,500 GPM at 185 feet of TDH when there is one (1) pump in operation at the existing Sycamore Hills Lift Station. The expected capacity of the one (1) pump in operation at the existing Sycamore Hills Lift Station is 1,150 GPM at 136 feet of TDH when there are two (2) pumps in operation at the Braemar Drive Lift Station.

The new 18-inch diameter PVC sanitary sewer force main will begin near the existing Sycamore Hills Lift Station and extend east along the north side of Covington Road to the intersection with Eggeman Road, south along the existing right-of-way (ROW) of Eggeman Road to the intersection with the Aboite Center Road, east along the ROW of Aboite Center Road to the intersection with West Jefferson Boulevard, cross under West Jefferson Boulevard to Engle Road and then extend east along the ROW of Engle Road to the Midwest Semipublic Wastewater Treatment Plant. The new 18-inch diameter PVC force main will be installed by jack and bore under I-69 at the Aboite Center Road Overpass and encased in a 36-inch diameter steel casing.

Inspection during the construction and installation of the new sanitary sewer, sanitary sewer lift station and sanitary sewer force mains will be provided by Utility Center, Inc. d/b/a Aqua Indiana, Inc. Maintenance after completion of construction will be provided by Utility Center, Inc. d/b/a Aqua Indiana, Inc. Wastewater treatment will be provided by Utility Center, Inc. d/b/a Aqua Indiana, Inc. at the Midwest Semipublic Waste\water Treatment Plant located at 6811 Engle Road.

CONDITIONS AND LIMITATIONS TO THE AUTHORIZATION FOR CONSTRUCTION OF SANITARY SEWERS

During the period beginning on the effective date of this permit and extending until the expiration date, the permittee is authorized to construct the above described sanitary sewer system. Such construction shall conform to all provisions of State Rule 327 IAC 3 and the following specific provisions:

PART I

SPECIFIC CONDITIONS AND LIMITATIONS TO THE CONSTRUCTION PERMIT

Unless specific authorization is otherwise provided under the permit, the permittee shall comply with the following conditions:

1. All local permits shall be obtained before construction is begun on this project.

2. If pollution or nuisance conditions are created, immediate corrective action will be taken by the permittee.

3. The separation of sanitary sewers from water mains and drinking water wells must comply with 327 IAC 3-6-9.

4. All gravity sewer pipe must be leak tested using either a hydrostatic test or air test in accordance with 327 IAC 3-6-19(d). If using a hydrostatic test, the rate of exfiltration or infiltration shall not exceed 200 gallons per inch of pipe diameter per linear mile per day. Air test shall be as prescribed.

5. The results of the gravity sewer leakage test and/or force main leakage test on the completed sewer shall be submitted to this office within three months of completion of construction.

6. Deflection tests must be performed on all flexible* pipe after the final backfill has been in place at least 30 days. No pipe shall exceed a vertical deflection of 5%. Deflection test results shall be submitted with the infiltration/exfiltration test results. (*The following are considered nonflexible pipes: vitrified clay pipe, concrete pipe, ductile iron pipe, cast iron pipe, asbestos cement pipe.)

7. Manholes shall be air tested in accordance with ASTM C1244-93, Standard Test Method for Concrete Sewer Manholes by the Negative Air

Pressure (Vacuum) Test. The manhole test results shall be submitted with the gravity sewer leakage test results.

8. A drop pipe must be provided for all sewers entering a manhole at an elevation of 24 inches or more above the manhole invert.

9. An audio-visual alarm shall be installed for the proposed lift station.

10. Air relief valves shall be installed at high points in the force main.

11. All force mains must be pressure and leak tested in accordance with 327 IAC 3-6-19(e).

Failure to submit test results within the allotted time period or failure to meet guidelines as set forth in the above conditions could be subject to enforcement proceedings as provided by 327 IAC 3-5-3.

PART II

GENERAL CONDITIONS

1. No significant or material changes in the scope of the plans or construction of this project shall be made unless the following provisions are met:

   a. Request for permit modification is made 60 days in advance of the proposed significant or material changes in the scope of the plans or construction;

   b. Submit a detailed statement of such proposed changes;

   c. Submit revised plans and specifications including a revised design summary; and

   d. Obtain a revised construction permit from this agency.

2. This permit may be modified, suspended, or revoked for cause including, but not limited to the following:

   a. Violation of any term or conditions of this permit:

   b. Obtaining this permit by misrepresentation or failure to disclose fully all relevant facts.

3. Nothing herein shall be construed as guaranteeing that the proposed sanitary sewer system shall meet standards, limitations or requirements of this or any other agency of state or federal government, as this agency has no direct control over the actual construction and/or operation of the proposed project.

PART III

APPEALS PROCEDURE

Anyone wishing to challenge this agency's decision for authorizing the construction of this facility may do so, provided that a petition for administrative review is filed as required by IC 4-21.5-3-7. The petition must be submitted within fifteen (15) days of the date of mailing of this permit notification. The petition must include facts demonstrating that you are either the applicant, a person aggrieved or adversely affected by this decision, or otherwise entitled to review by law. Additionally, IC 13-15-6-2 requires that your petition include:

1. The name and address of the person making the request;

2. The interest of the person making the request;

3. Identification of any persons represented by the person making the request;

4. The reasons, with particularity, for the request;

5. The issues, with particularity, proposed for consideration at the hearing; and

6. Identification of the permit terms and conditions which, in the judgement of the person making the request, would be appropriate in the case in question to satisfy the requirements of the law governing permits of the type granted or denied by the Assistant Commissioner's action.

7. Pursuant to IC 4-21.5-3-1(f), any document serving as a petition for review or review and stay must be filed with the Office of Environmental Adjudication. Filing of such a document is complete on the earliest of the following dates:

    a. The date on which the petition is delivered to the Office of Environmental Adjudication, Indiana Government Center North, 100 North Senate Avenue, Room 501, Indianapolis, Indiana 46204;

    b. The date of the postmark on the envelope containing the petition, if the petition is mailed by United States mail; or

    c. The date on which the petition is deposited with a private carrier, as shown by a receipt issued by the carrier, if the petition is sent by private carrier.

PROJECT NO.
SP-1413

INTRA-OFFICE MEMO

FROM: 327 IAC Construction Permit Coordinator
Engineering Plan Review Section
Office of Water Management

TO: MM

SUBJECT: Project: Braemar Pump Station & Force Main and Aboite Diversion F.M.
Location: Fort Wayne, Allen County
Units: Existing flows
Design Flow: 792,000 gpd
Received On: 7/3/12
Connection To: ? Midwest Semi Public WWTP MM
Wastewater Treatment By: Utility Center, Inc dba Aqua Indiana, Inc. /Midwest
Maintenance Provided By: Utility Center, Inc. dba Aqua Indiana, Inc.

Wasteload Allocation Checklist -Required only if additional loading (flow) to treatment plant	✓	New one needed if more than 1 year old - it may need to include maintenance and inspection information.
Sanitary Sewer Design Summary ---------- Existing Sewer size & location	✓ 8/21/2012 MM	Should be completely filled out, and match submitted WLA.
$ Check ----------	✓	Not required for State or Federal projects.
Signed Application ----------	✓	If signed by mayor or other official of Municipality or Semi-public entity, then WLA letter may not be required.
Plans and Specifications ----------	✓	Each page must be signed or sealed by Indiana P.E., A.I.A. or L.S. (If no lift station work is being done) PLAN VIEW, PROFILE VIEW, DETAILS, SPECIFICATIONS (ASTM, SDR, Bedding, Separation, etc.)
Potentially ~~Affected~~ Person List -------- Form	✓ 8/21/2012 MM	Names and addresses.
Certification Letter of P.E. or L.S.------	✓	The supervising P.E. or L.S.

APPLICATION FOR SANITARY SEWER CONSTRUCTION PERMIT PER 327 IAC 3

STATE FORM 53159 (R2 / 9-08)

Indiana Department of Environmental Management
Office of Water Quality – Mail Code 65-42
Facilities Construction Section
100 North Senate Avenue, room N1255
Indianapolis, IN 46204-2251

INSTRUCTIONS:

1. *This form must be filled out completely.*
2. *Additional pages (attachments following this form) are part of this application form and must be filled out completely.*
3. *Submission of plans and specifications are part of the application.*
4. *Submit the application form, additional pages, plans and specifications to the above address.*
5. *If you have any questions regarding this application, call IDEM's Office of Water Quality at (317) 232-8670.*

APPLICANT	APPLICANT'S ENGINEER OR LAND SURVEYOR
Name William L. G. Etzler	Name Casey Erwin
Company Name Utility Center, Inc. dba Aqua Indiana, Inc.	Company Name DLZ Indiana
Address 1111 W. Hamilton Road S	Address 111 W. Columbia Street, Suite 100
Address Fort Wayne, IN 46814	Address Fort Wayne, IN 46802
Telephone number 260-625-4700	Telephone number 260-420-3114

NAME AND LOCATION OF PROPOSED FACILTY	ATTACHMENT CHECKLIST
Name: Braemar Pump Station and Force Main; Aboite Diversion Force Main	A. Sanitary Sewer Design Summary Form: ☒ Yes
Location (*Referenced to two existing streets*) Braemar, Covington, Eggeman, Aboite Center, Engle	B. Capacity Certification/Allocation Letter: ☒ Yes
Location: Braemar Pump Station and Force Main 3,966 LF of force main along Braemar & Covington	C. Certification of Registered Engineer or Land Surveyor Letter: ☒ Yes
Location: Aboite Diversion Force Main; 24,554 LF of force main along Covington, Eggeman, Aboite Center, Engle	D. Plans and Specifications: ☒Yes
City Fort Wayne	E. Identification of Potentially Affected Persons (*see note below*): ☒Yes
County Allen	F. Mailing Labels for Potentially Affected Persons: ☒Yes
	Note Regarding item (E) above: *Fully identify all persons, by name and address, who may be potentially affected by the issuance of this permit, such as adjoining landowners, persons with a propriety interest, and/or persons who have complained or submitted comments about your facility.* ***Under IC 4-21.5-3-4, IDEM is required to notify potentially affected persons of its permit decision.***

PERMIT APPLICATION FOR CONSTRUCTION, EXPANSION, OR MODIFICATION OF (*Check all that apply*)	FUNDING
A. Municipal Collection Facility: ☒Yes	SRF Funding: ☐Yes ☒No
B. Semipublic Collection Facility: ☐Yes	
C. New facility: ☒Yes	
D. Expansion or modification of existing facility: ☐Yes	

CERTIFICATION AND SIGNATURE

Application is hereby made for a Permit to authorize the activities described herein. I certify that I am familiar with the information contained in this application and to the best of my knowledge and belief such information is true, complete and accurate.

Printed name of person signing William L. G. Etzler	Title Vice President and General Manager
Signature of Applicant	Date application signed *(month, day, year)*

Please refer to IC 13-30-10 for penalties of submission of false information

AQUA

Aqua Indiana, Inc.
1111 W. Hamilton Road S
Fort Wayne, IN 46814

T: 260.625.4700
F: 260.625.4436
www.aquaindiana.com

June 27, 2012

Indiana Department of Environmental Management
Office of Water Quality – Mail Code 65-42
Facility Construction Section
Attn: Don Worley
100 North Senate Avenue, room N1255
Indianapolis, IN 46204-2251

2012 JUL -3 A 10: 23
IDEM
OFFICE OF
WATER QUALITY

Re: Braemar Pump Station and Force Main

Dear Mr. Worley,

One (1) set of plans and specifications showing details of a sanitary sewer extension design for the above captioned project to be connected to existing infrastructure.

These plans and specifications were prepared and certified by: DLZ Indiana, 111 W. Columbia Street, Suite 100, Fort Wayne, IN 46802.

The developer is: Aqua Indiana, 1111 W. Hamilton Road S., Fort Wayne, IN 46814

Line Size	Line Material	Approximate Length
21"	PVC ASTM F679, SDR 26, Joints ASTM D3212, Bedding Class I or II per ASTM D 2321	29 ± L.F.
12"	PVC ASTM D2241, SDR 21 (200 PSI), Joints ASTM F477/D3139	3,346 ± L.F.
12"	PVC AWWA C900, DR 18 (235 PSI) fused joints	620 ± L.F.
18"	PVC AWWA 905, DR 21 (200 PSI), Joints ASTM F477/D3139	24,554 ± L.F.

The facilities are to be connected to existing lines as indicated on the set of plans and are to be served by Aqua Indiana, Aboite System.

Aqua Indiana has approved the sanitary sewer system design and will provide service to this area, contingent on the developer meeting all the requirements of the local, state and federal regulatory agencies for developmental and contractual agreements with the servicing utilities.

We appreciate you reviewing the plans and look forward to your approval and/or comments.

Sincerely,

William L.G. Etzler
Vice President & Regional Mgr

Cc: DLZ

SANITARY SEWER DESIGN SUMMARY

Design Flow			
Number of units			
	1 bedroom apartments	200 gpd/unit	gpd
	2 bedroom apartments	300 gpd/unit	gpd
	Single family homes	310 gpd/unit	gpd
	Commercial lots		gpd
Existing flow to Braemar PS	diverted from 21" Sewer Main		396,000 gpd
Existing flow to Sycamore Hills	PS		396,000 gpd
		Total average flow	792,000 gpd
Peaking factor	x4	**Peak flow**	3,168,000 gpd

Sewer	
ft.	8-inch _____ (sewer type)
ft.	10-inch _____
29 ft.	21" PVC, ASTM F679, SDR 26, Joints ASTM D3212, Bedding Class I or II per ASTM D 2321
ft.	
ft.	
29 ft.	Total length of sewer

The new sewer will be connected to ~~an existing _____ inch diameter sanitary sewer at _____ (referenced to two existing streets)~~ the new Braemar PS wet well. **Connection points described at end of this DESIGN SUMMARY.**

CASEY M. ERWIN REGISTERED No. 10001102 STATE OF INDIANA PROFESSIONAL ENGINEER

8-15-12

(P.E. or L.S. stamp, signature and date)

New Braemar Road Lift Station 1,100 GPM Req'd				
Type	submersible		(wet/dry, submersible, wet-well mounted, etc.)	
Number of pumps	2			
Capacity of pumps	1,400 gpm	TDH 147	RPM 1775	85 HP
Back-up power source	☐ Yes ☒ No; Hook-up for portable generator			
Average wet-well detention time	5 minutes			
Audio/visual alarm with self-contained power supply or telemetry system			Audio/visual with telemetry	
Force Main	Open cut: 3,346 LF of 12-inch PVC AWWA C900 DR-18 (235 psi), Joints ASTM F477/D3139 HDD: 620 LF of 12-inch PVC AWWA C900, DR-18 (235 psi), fused joints			
Force main discharge elevation	Inv Elev at WWTP 750.5' (high point on new Aboite force main 849')			

Existing Sycamore Hills Lift Station 1,100 GPM Req'd				
Type	submersible		(wet/dry, submersible, wet-well mounted, etc.)	
Number of pumps	2			
Capacity of pumps	1,750 gpm	TDH 116	1750 RPM	75 HP
Back-up power source	☐ Yes ☒ No; Hook-up for portable generator			
Average wet-well detention time	5 minutes			
Audio/visual alarm with self-contained power supply or telemetry system			Audio/visual with telemetry	
Existing Sycamore Hills Force Main	30 feet of 8-inch (*type*) PVC			
New Aboite Diversion Force Main	Open cut: 23,339 LF of 18" PVC AWWA C905, DR-21 (200 psi), Joints ASTM F477/D3139 HDD: 1,215 LF of 18" PVC AWWA C905 DR-21 (200 psi), fused joints			
Force main discharge elevation	Inv Elev at WWTP 750.5' (high point on new Aboite force main 849')			

Waste Treatment	
Wastewater treatment will be provided by	Utility Center, Inc. dba Aqua Indiana, Inc. (at Midwest WWTP)

Inspection/Maintenance	
Inspection during construction will be provided by	Utility Center, Inc. dba Aqua Indiana, Inc.
Maintenance after completion will be provided by	Utility Center, Inc. dba Aqua Indiana, Inc.

DESCRIPTION OF CONNECTION POINTS

- An existing 21" diameter gravity sewer will be diverted to the proposed Braemar Pump Station.
- The Braemar 12" diameter force main will discharge to the proposed 18" diameter Aboite Diversion force main.
- The existing Sycamore Hills 8" diameter force main will discharge to the proposed 18" diameter Aboite Diversion force main.
- The proposed 18" diameter Aboite Diversion force main will discharge to the Midwest Wastewater Treatment Plant.

PART OF STATE FORM 53159 (R2/9-08)

SANITARY SEWER DESIGN SUMMARY

Design Flow			
Number of units			
	1 bedroom apartments	200 gpd/unit	gpd
	2 bedroom apartments	300 gpd/unit	gpd
	Single family homes	310 gpd/unit	gpd
	Commercial lots		gpd
Existing flow to Braemar PS	diverted from 21" Sewer Main		396,000 gpd
Existing flow to Sycamore Hills	PS		396,000 gpd
		Total average flow	792,000 gpd
Peaking factor	x4	**Peak flow**	3,168,000 gpd

Sewer	
ft.	8-inch _____ (sewer type)
ft.	10-inch _____
29 ft.	21" PVC, ASTM F679, SDR 26, Joints ASTM D3212, Bedding Class I or II per ASTM D 2321
ft.	
ft.	
29 ft.	Total length of sewer

The new sewer will be connected to ~~an existing _____ inch diameter sanitary sewer at _____ (referenced to two existing streets)~~ the new Braemar PS wet well

CASEY M. ERWIN REGISTERED No. 10001102 STATE OF INDIANA PROFESSIONAL ENGINEER

6-26-12

(P.E. or L.S. stamp, signature and date)

New Braemar Road Lift Station				
Type	submersible		(wet/dry, submersible, wet-well mounted, etc.)	
Number of pumps	2			
Capacity of pumps	1,100 gpm	TDH 144	RPM 1775	85 HP
Back-up power source	☐ Yes ☒ No; Hook-up for portable generator			
Average wet-well detention time	5 minutes			
Audio/visual alarm with self-contained power supply or telemetry system			Audio/visual with telemetry	
Force Main	For open cut: 3,346 feet of 12-inch PVC ASTM D2241, SDR 21 (200 psi), Joints ASTM F477/D3139 For HDD: 620 feet of 12-inch PVC AWWA C900, DR 18 (235 psi), fused joints			
Force main discharge elevation	Inv Elev at WWTP 750.5' (high point on new Aboite force main 849')			

Existing Sycamore Hills Lift Station				
Type	submersible		(wet/dry, submersible, wet-well mounted, etc.)	
Number of pumps	2			
Capacity of pumps	1,100 gpm	TDH 111	1750 RPM	75 HP
Back-up power source	☐ Yes ☒ No; Hook-up for portable generator			
Average wet-well detention time	5 minutes			
Audio/visual alarm with self-contained power supply or telemetry system			Audio/visual with	
Existing Sycamore Hills Force Main	30 feet of 8-inch (*type*) PVC			
New Aboite Diversion Force Main	24,554 feet of 18-inch (*type*) PVC AWWA C905, DR 21 (200 p			
Force main discharge elevation	Inv Elev at WWTP 750.5' (high point on new Aboite force			

Deficient Original

JUL 03 2012

Waste Treatment	
Wastewater treatment will be provided by	Utility Center, Inc. dba Aqua Indiana, Inc. (at Midwest WWTP)

Inspection/Maintenance	
Inspection during construction will be provided by	Utility Center, Inc. dba Aqua Indiana, Inc.
Maintenance after completion will be provided by	Utility Center, Inc. dba Aqua Indiana, Inc.

JUL 03 2012

Summary of System Operating Cases

Flow (GPM)					
	Case 1	**Case 2**	**Case 3**	**Case 4**	**Case 5**
18" Aboite FM	1750	1400	2475	1850	2650
12" Braemar FM	NA	1400	1100	1850	1500
8" Sycamore FM	1750	NA	1375	NA	1150

Velocity (FPS)					
	Case 1	**Case 2**	**Case 3**	**Case 4**	**Case 5**
18" Aboite FM	2.33	1.86	3.29	2.46	3.52
12" Braemar FM	NA	4.21	3.31	5.57	4.51
8" Sycamore FM	11.17	NA	8.78	NA	7.34

TDH (FT)					
	Case 1	**Case 2**	**Case 3**	**Case 4**	**Case 5**
18" Aboite FM	83.25	75.03	105.14	85.88	111.37
12" Braemar FM	NA	69.52	59.55	88.29	73.30
8" Sycamore FM	32.98	NA	27.29	NA	24.52

TDH (FT)					
	Case 1	**Case 2**	**Case 3**	**Case 4**	**Case 5**
Braemar	NA	144.55	164.69	174.17	184.67
Sycamore	116.23	NA	132.43	NA	135.89

	Sycamore	**Braemar**
Case 1: Sycamore Hills Pump Station operating independently.		
Case 2: Braemar Pump Station operating independently (one pump only).		
Case 3: Both pump stations operating simultaneously (one pump from each).		
Case 4: Braemar Pump Station operating independently (two pumps in parallel).		
Case 5: Both pump stations operating simultaneously (one pump from Sycamore Hills and two pumps from Braemar).		

Sycamore Hills Pump Station:
One pump and one backup pump.

Braemar Pump Station:
Two pumps set to work independently or in parallel.

Technical Standard Alternative – Directional Drilling

As part of the force main design we are requesting an alternative to the technical standard per 327 IAC 3-6-32 for the use of the directional drilling method of installing the force main piping. We wish to specify that the force main be installed using the following standard pipe:

AWWA C900 Standard for Polyvinyl Chloride (PVC), Pressure Pipe, 4 in. through 12 in. for water distribution.
AWWA C905 Standard for Polyvinyl Chloride (PVC) Water Transmission Pipe, Nominal Diameters 14 in. through 36 in.

The directional drilling method shall be a two step process with step one consisting of a pilot hole and the second step consisting of enlarging the pilot hole to convey the soil cuttings to the surface for disposal. The contractor shall be required to maintain uniform grade and the depth of bore of the pipelines shall be a minimum of 5 feet.

M:\Proj\1166\5135 - Aqua Indiana\Final Design\Permits\IDEM Sanitary\TECH STD ALT .doc

JUL 03 2012

DLZ
ENGINEERS · ARCHITECTS · SCIENTISTS
PLANNERS · SURVEYORS

IDEM
OFFICE OF
WATER QUALITY
2012 AUG 21 A 9:49

Founded in 1916
OVER 90 YEARS
DESIGN
EXCELLENCE

August 15, 2012

Mr. Mike Miles
Indiana Department of Environmental Management
Office of Water Quality
Facility Construction Permit Section
100 North Senate Avenue
Indianapolis, Indiana 46204

Subject: Address Deficiency Notice for Construction Permit Application
Braemar Pump Station & Force Main and Aboite Diversion Force Main
Project No. SP-1413

Dear Mr. Miles:

The following items are enclosed:

1. Revised Sanitary Sewer Design Summary Form, re-signed and re-dated.
2. Identification of Potentially Affected Persons form signed and dated.
3. Summary of System Operating Cases
4. Revised Pump Curve for Braemar Pump Station.
5. Revised Pump Curve for existing Sycamore Hills Pump Station.
6. System Operating Curves.
7. Revised hydraulic calculations using a C factor of 120. (12 sheets; one for each force main segment/flow case)
8. Revised plan sheets 10 and 11 from Braemar Pump Station and Force Main Drawings.
9. Revised plan sheets 4, 6, 16, 26, 28, 32, 33 and 38 from Aboite Diversion Force Main Drawings.

I. ADMINISTRATIVE EVALUATION

1. A description of connection points has been added to the Sanitary Sewer Design Summary. Please see revised Sanitary Sewer Design Summary enclosed.

2. The Identification of Potentially Affected Persons form, signed and dated is enclosed.

II. TECHNICAL REVIEW

1. If the Braemar Force Main was connected to the Sycamore Hills Pump Station wet well, the Sycamore Pump Station would be overwhelmed during periods of wet weather flow and likely incur more sanitary overflows. Currently, the

DLZ
ENGINEERS · ARCHITECTS · SCIENTISTS
PLANNERS · SURVEYORS

Founded in 1916
OVER 90 YEARS
DESIGN
EXCELLENCE

August 15, 2012

Mr. Don Worley
IDEM OWQ Construction Permits Section

Sycamore Hills Pump Station controls do not allow for both of the pumps to operate simultaneously due to the limiting 8-inch diameter force main from the pump station. This may be a consideration in a future project in which the pump station discharge piping would be changed out from 8-inch diameter to larger.

2. The Braemar Pump Station and the Sycamore Hills Pump Station will operate simultaneously or independently. Please refer to pump operating curves enclosed.

3. The Sanitary Sewer Design Summary gpm and TDH for the Braemar Pump Station have been changed to reflect the revised pump capacity analysis. With this pumping system, the gpm pump capacity and TDH are as follows:
   a. 1,400 gpm at 145 TDH with one pump at Braemar operating. (Case 2)
   b. 1,100 gpm at 165 TDH with one pump at Braemar and one pump at Sycamore Hills operating. (Case 3)

   - Please refer to the System Operating Curves enclosed.
     - Case 1: Sycamore Hills Only (one pump total)
     - Case 2: Braemar Only (one pump total)
     - Case 3: Sycamore Hills Simultaneous Operation (one pump from each pump station-two pumps total)
     - Case 3: Braemar Simultaneous Operation (one pump from each pump station-two pumps total)
     - Case 4: Braemar Only (two pumps total pumping in parallel)
     - Case 5: Sycamore Hills simultaneous Operation (one pump from Sycamore Hills and two pumps from Braemar-three pumps total)
     - Case 5: Braemar simultaneous Operation (one pump from Sycamore Hills and two pumps from Braemar-three pumps total)
   - Please refer to the revised hydraulic calculation sheets enclosed that reflect the various pumping cases. A "C factor" of 120 has been used in the calculations.
   - There is one pumping case, Case 2, when only one pump at the Braemar Pump Station is operating, that the velocity in the 18-inch Aboite Diversion force main is below 2 feet per second. It is 1.86 feet per second. Typically, the Sycamore Hill Pump Station will be operating and maintain the scouring velocity in the 18-inch force main. If the Sycamore Hill Pump Station is not operating, due to maintenance for example, then both pumps at Braemar Pump Station can be operated simultaneously to maintain the scour velocity in the 18-inch force main. For all other

DLZ
ENGINEERS · ARCHITECTS · SCIENTISTS
PLANNERS · SURVEYORS

Founded in 1916
OVER 90 YEARS
DESIGN
EXCELLENCE

August 15, 2012

Mr. Don Worley
IDEM OWQ Construction Permits Section

pumping cases, a velocity of at least 2 feet per second is maintained at design pumping rates. Please refer to the revised calculation sheets enclosed.

- A minimum velocity of 2 feet per second or above will be maintained in the 18-inch diameter force main with one pump operating at Sycamore Hill Pump Station. Simultaneous pump station operation is not required to have the minimum scouring velocity of 2 feet per second.

4. The Sanitary Sewer Design Summary gpm and TDH for the Sycamore Hills Pump Station have been changed to reflect the revised pump capacity analysis. With this pumping system, the gpm pump capacity and TDH are as follows:
   a. 1,750 gpm at 116 TDH with one pump at Sycamore operating. (Case 1)
   b. 1,375 gpm at 132 TDH with one pump at Sycamore Hills and one pump at Braemar operating. (Case 3)
   - Please refer to the System Operating Curves and revised hydraulic calculation sheets enclosed.

5. The expected design flows in the 18-inch diameter force main have been re-evaluated for several pumping scenarios including simultaneous operation of both pump stations. Please refer to the revised pump curves, system operating curves and hydraulic calculation sheets enclosed.

6. The design of the vortex flow insert is based on the manufacturer's recommendations. The vortex flow range is 0.5 – 4.0 MGD. Peak design flow rate of 3.56 MGD (2,475 gpm, simultaneous operation of one pump at Braemar and one pump at Sycamore Hills pump stations.) This data is part of the specifications for the Vortex Flow Insert. This data has been placed on plan sheet No. 38 for clarification. Please refer to revised plan sheet No. 38 enclosed.

7. For Directional Drilling:
   - This is confirming that approximately 620 LF of 12-inch diameter PVC (AWWA C900/restrained joint DR-18) and/or 12-inch diameter PVC (AWWA fusible C900 DR-18 (made with thermal butt fused joints)) will be installed by directional drilling.
   - This is confirming that approximately 1,215 LF of 18-inch diameter PVC (AWWA fusible C905 DR-21 (made with thermal butt fused joints)) will be installed by horizontal directional drilling. Please refer to the revised

DLZ
ENGINEERS · ARCHITECTS · SCIENTISTS
PLANNERS · SURVEYORS

Founded in 1916
OVER 90 YEARS
DESIGN EXCELLENCE

August 15, 2012

Mr. Don Worley
IDEM OWQ Construction Permits Section

Sanitary Sewer Design Summary enclosed for clarification of the length of directional drilling.

8. Notation has been added to the Braemar Pump Station and Force Main plan sheets Nos. 10 and 11 and to the Aboite Diversion Force Main plan sheets Nos. 4, 6, 16, 26, 32 and 33 to show ASTM and/or AWWA specifications for the sections proposed for installation by horizontal directional drilling.

Should you have any questions, do not hesitate to contact me.

Sincerely,

DLZ Indiana, LLC

Casey Erwin, P.E.
Project Engineer

Enclosures

cc: William L.G. Etzler, Aqua Indiana, Inc.

M:\Proj\1166\5135 - Aqua Indiana\Docs\Letters\2012 -8-15 LOT Address Deficiency .docx

111 West Columbia Street ♦ Suite 100 ♦ Fort Wayne, Indiana 46802 ♦ (260) 420-3114 ♦ FAX (260) 420-0240
With Offices Throughout The Midwest
www.dlz.com

MILES, MIKE

From: Diana L.Toth [dltoth@dlz.com]
Sent: Tuesday, August 28, 2012 2:52 PM
To: MILES, MIKE
Cc: Casey M. Erwin; David Lutz; 'Callahan, Patrick W.'
Subject: Aqua IN construction Permit
Attachments: (4) Summary-Pump Curves-System Curves.pdf

Mike,
The Braemar Pump Station pumps to 3,346 LF of 12" force main that discharges to the 18" Aboite Diversion force main.
The Sycamore Hills Pump Station pumps to 30 LF of 8" force main that discharges to the 18" Aboite Diversion force main.
The Braemar pumps and the Sycamore pumps pump against different TDHs because they are at different points in the pump system.
The TDH that these pumps encounter for each pumping case is shown on the attached sheet under TDH.
At the connection point at the start of the 18" Aboite Diversion Force Main, the TDH is the same for both the Braemar FM and for the Sycamore Hills FM. The TDH for Case 5 is equal to 111.37' at the point of connection.

If you have further questions or comments please call.
Diana

Diana L.Toth | Civil Engineer

260-420-3114 x6610 (office)
dltoth@dlz.com | www.dlz.com

DLZ
ENGINEERS • ARCHITECTS • SCIENTISTS
PLANNERS • SURVEYORS

Innovative Thinking
Exceptional Design
Unmatched Client Service

Please consider the environment before printing this e-mail

Flow (GPM)					
	Case 1	**Case 2**	**Case 3**	**Case 4**	**Case 5**
18" Aboite FM	1750	1400	2475	1850	2650
12" Braemar FM	NA	1400	1100	1850	1500
8" Sycamore FM	1750	NA	1375	NA	1150

Velocity (FPS)					
	Case 1	**Case 2**	**Case 3**	**Case 4**	**Case 5**
18" Aboite FM	2.33	1.86	3.29	2.46	3.52
12" Braemar FM	NA	4.21	3.31	5.57	4.51
8" Sycamore FM	11.17	NA	8.78	NA	7.34

TDH (FT)					
	Case 1	**Case 2**	**Case 3**	**Case 4**	**Case 5**
18" Aboite FM	83.25	75.03	105.14	85.88	111.37
12" Braemar FM	NA	69.52	59.55	88.29	73.30
8" Sycamore FM	32.98	NA	27.29	NA	24.52

TDH (FT)					
	Case 1	**Case 2**	**Case 3**	**Case 4**	**Case 5**
Braemar	NA	144.55	164.69	174.17	184.67
Sycamore	116.23	NA	132.43	NA	135.89

MILES, MIKE

From: Diana L.Toth [dltoth@dlz.com]
Sent: Tuesday, August 28, 2012 12:11 PM
To: MILES, MIKE
Cc: Casey M. Erwin; SCHNAITH, DALE
Subject: RE: Aqua IN IDEM Constr Permit for Braemar & Aboite Diversion Projects
Attachments: Braemar PS 08-28.pdf; Sycamore PS 08-28.pdf

Mike,
Attached are the pump curve graphs that you wanted.
Full size revised plan sheets will be put into the mail to you.
Let me know if you have further questions or comments.
Diana

From: MILES, MIKE [mailto:MMILES@idem.IN.gov]
Sent: Tuesday, August 28, 2012 10:58 AM
To: Diana L.Toth
Cc: Casey M. Erwin; SCHNAITH, DALE
Subject: RE: Aqua IN IDEM Constr Permit for Braemar & Aboite Diversion Projects

Casey & Diana,

The pdf attachment shows combined pump performance curves for two(2) & three (3) pumps running together in parallel with superimposed TDH system curves. The attached analysis conforms to the procedure described in pump handbooks. I was looking for a similar graphical analysis on this project (IDEM # SP-1413). Please furnish a similar graphical analysis for this project.

The pump curves that you sent me show single pumps in operation with superimposed system TDH curves that appear to be divided between multiple operating pumps. This does not conform to the recommended procedure that is described in the handbooks.

The revised plan sheets with the PE stamp, Signature & Date that you sent in a pdf attachment to the August 24, 2012 E-mail are acceptable. Please send full size copies of the revised plan sheets.

Please do not hesitate to contact me if you have questions.

Mike Miles, P.E.
Project Engineer
IDEM Facility Construction Section
317 / 232 - 6548

From: Diana L.Toth [mailto:dltoth@dlz.com]
Sent: Friday, August 24, 2012 11:30 AM
To: MILES, MIKE
Cc: Casey M. Erwin; David Lutz; 'Callahan, Patrick W.'
Subject: Aqua IN IDEM Constr Permit for Braemar & Aboite Diversion Projects

Mike,
Attached is the additional information that you requested for the construction permit review for the subject projects.
Diana

Diana L.Toth | Civil Engineer

260-420-3114 x6610 (office)
dltoth@dlz.com | www.dlz.com

DLZ
ENGINEERS • ARCHITECTS • SCIENTISTS
PLANNERS • SURVEYORS

Innovative Thinking
Exceptional Design
Unmatched Client Service

Please consider the environment before printing this e-mail

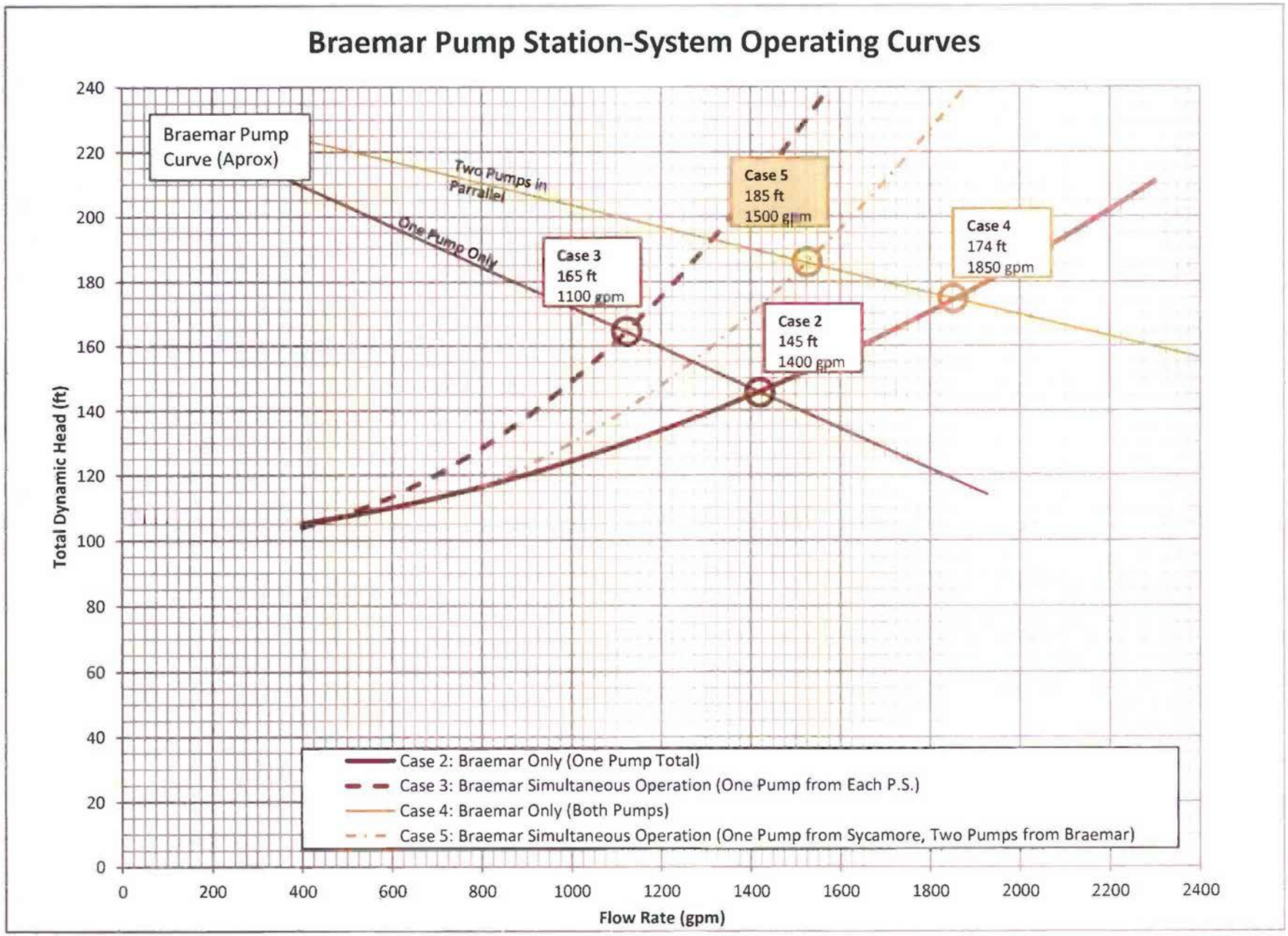
Braemar Pump Station-System Operating Curves
Braemar Pump Curve (Aprox)
Two Pumps in Parrallel
One Pump Only
Case 5
185 ft
1500 gpm
Case 3
165 ft
1100 gpm
Case 4
174 ft
1850 gpm
Case 2
145 ft
1400 gpm
Case 2: Braemar Only (One Pump Total)
Case 3: Braemar Simultaneous Operation (One Pump from Each P.S.)
Case 4: Braemar Only (Both Pumps)
Case 5: Braemar Simultaneous Operation (One Pump from Sycamore, Two Pumps from Braemar)
Total Dynamic Head (ft)
Flow Rate (gpm)
0
20
40
60
80
100
120
140
160
180
200
220
240
0
200
400
600
800
1000
1200
1400
1600
1800
2000
2200
2400

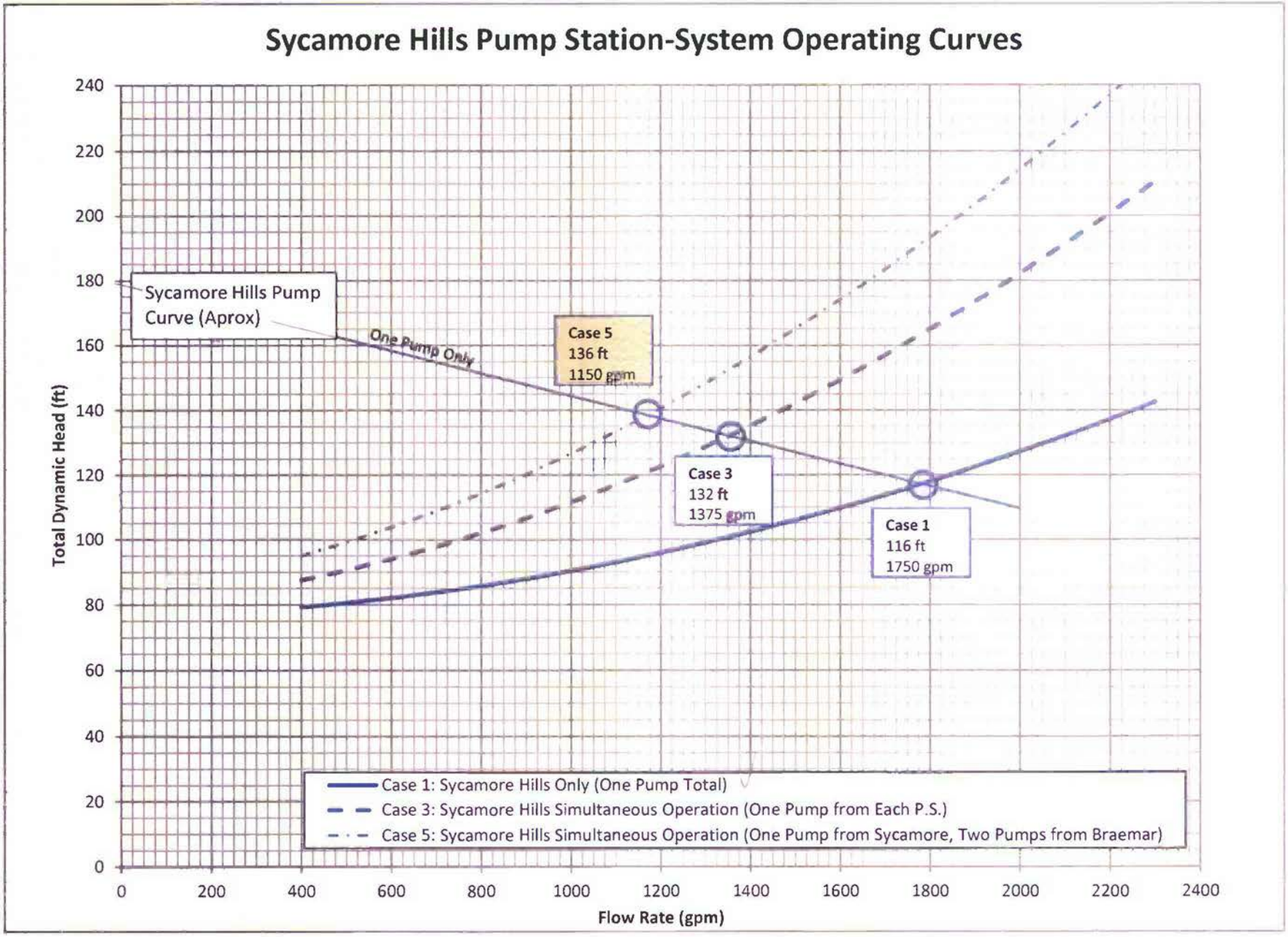
Sycamore Hills Pump Station-System Operating Curves
Total Dynamic Head (ft)
Flow Rate (gpm)
0
20
40
60
80
100
120
140
160
180
200
220
240
0
200
400
600
800
1000
1200
1400
1600
1800
2000
2200
2400
Sycamore Hills Pump Curve (Aprox)
One Pump Only
Case 5
136 ft
1150 gpm
Case 3
132 ft
1375 gpm
Case 1
116 ft
1750 gpm
Case 1: Sycamore Hills Only (One Pump Total)
Case 3: Sycamore Hills Simultaneous Operation (One Pump from Each P.S.)
Case 5: Sycamore Hills Simultaneous Operation (One Pump from Sycamore, Two Pumps from Braemar)

MILES, MIKE

From: Diana L.Toth [dltoth@dlz.com]
Sent: Friday, August 24, 2012 11:30 AM
To: MILES, MIKE
Cc: Casey M. Erwin; David Lutz; 'Callahan, Patrick W.'
Subject: Aqua IN IDEM Constr Permit for Braemar & Aboite Diversion Projects
Attachments: 2012-8-24 combined submittal to MMiles.pdf

Mike,
Attached is the additional information that you requested for the construction permit review for the subject projects.
Diana

Diana L.Toth | Civil Engineer

260-420-3114 x6610 (office)
dltoth@dlz.com | www.dlz.com

DLZ
ENGINEERS • ARCHITECTS • SCIENTISTS
PLANNERS • SURVEYORS

Innovative Thinking
Exceptional Design
Unmatched Client Service

Please consider the environment before printing this e-mail

DLZ
ENGINEERS • ARCHITECTS • SCIENTISTS
PLANNERS • SURVEYORS

Founded in 1916
OVER 90 YEARS
DESIGN
EXCELLENCE

August 24, 2012

Mr. Mike Miles
Indiana Department of Environmental Management
Office of Water Quality
Facility Construction Permit Section
100 North Senate Avenue
Indianapolis, Indiana 46204

Subject: Address Deficiency Notice for Construction Permit Application
Braemar Pump Station & Force Main and Aboite Diversion Force Main
Project No. SP-1413

Dear Mr. Miles:
This letter serves to address the additional comment items per the telephone conversation and follow-up email with Diana Toth on August 23, 2012.

Comments:
Item 1. Yes, please provide revised plan sheets with a PE stamp, signature & date.

Item 2. Yes, please provide a combined pump curve for both pumps at the new Braemar Lift (Pump) Station showing parallel operation along with a superimposed system TDH curve (i.e., Case # 4). This information is necessary to verify the stated combined pump capacity of 1,850 GPM at approximately 174 feet of TDH.

Item 3. Yes, please provide additional combined pump curve(s) that show the proposed addition of the existing Sycamore Hills Lift Station when one (1) pump at the Braemar Lift Station is operating (Case # 3) & also when both pumps at the Braemar Lift Station are in operation (Case # 5). Please include (if possible) superimposed system TDH curves on the combined pump curves in order to verify the combined pump capacities.

Item 4. Yes, I noticed that the shutoff head for the existing Sycamore Hills Lift Station Pumps is approximately 180 feet. The shutoff head of 180 feet is nearly equal to the 174 feet of TDH at 1,850 GPM when both of the Braemar Lift Station pumps are in operation (Case # 4). Please verify that the existing Sycamore Hills Lift Station can pump the stated peak influent flow of 1,100 GPM (per the Design Summary) when the new Braemar Lift Station is in operation.

The following items are enclosed:

1. Revised plan sheets with PE stamp, signature and date
   - 10 and 11 from Braemar Pump Station and Force Main Drawings
   - 4, 6, 16, 26, 28, 32, 33 and 38 from Aboite Diversion Force Main Drawings.
2. Braemar Pump Station combined pump curve for both pumps operating (Case 4).

DLZ
ENGINEERS · ARCHITECTS · SCIENTISTS
PLANNERS · SURVEYORS

Founded in 1916
OVER 90 YEARS
DESIGN
EXCELLENCE

August 24, 2012

Mr. Mike Miles
IDEM OWQ Construction Permits Section

3. Sycamore Hills Pump Station and Braemar Pump Station pump curves for one pump from each PS operating (Case 3).
4. Sycamore Hills Pump Station and Braemar Pump Station pump curves for one pump from Sycamore Hills and both pumps from Braemar operating (Case 5).

Per our pump system operating evaluation, the highest TDH that the Sycamore Hills Pump Station will encounter is in Case 5, where the TDH is 136 feet. The corresponding TDH encountered at the Braemar Pump Station for Case 5 is 185 feet.

The Sycamore Hills Pump Station will be able to pump the peak influent flow of 1,100 gpm in all pumping cases.

Should you have any questions, do not hesitate to contact me.

Sincerely,

DLZ Indiana, LLC

Casey Erwin, P.E.
Project Engineer

Enclosures

cc: William L.G. Etzler, Aqua Indiana, Inc.

M:\Proj\1166\5135 - Aqua Indiana\Docs\Letters\2012 -8-24 LOT Address Deficiency .docx

111 West Columbia Street ♦ Suite 100 ♦ Fort Wayne, Indiana 46802 ♦ (260) 420-3114 ♦ FAX (260) 420-0240
With Offices Throughout The Midwest
www.dlz.com

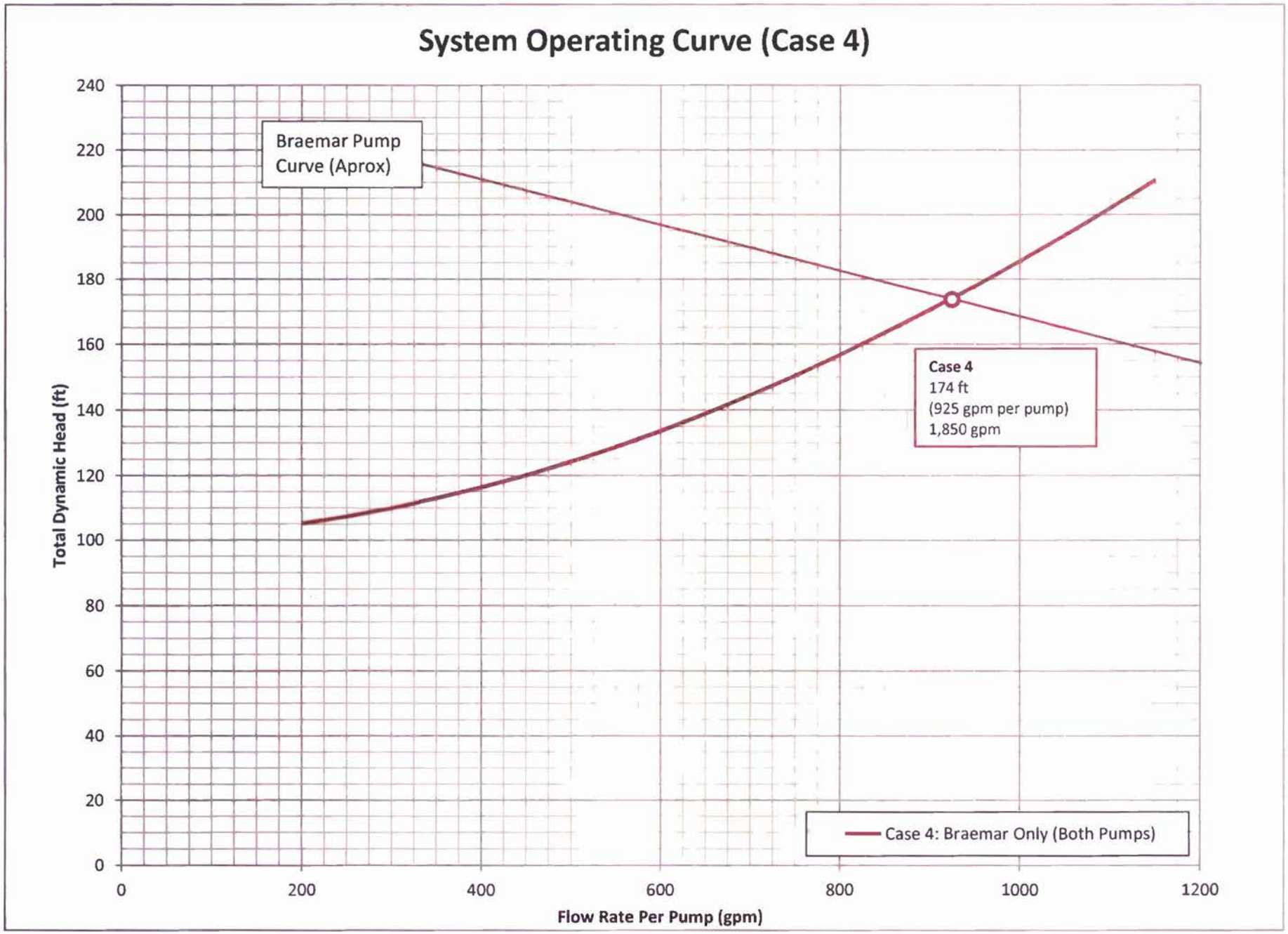
System Operating Curve (Case 4)
Braemar Pump Curve (Aprox)
Case 4
174 ft
(925 gpm per pump)
1,850 gpm
Case 4: Braemar Only (Both Pumps)
Total Dynamic Head (ft)
Flow Rate Per Pump (gpm)
0
20
40
60
80
100
120
140
160
180
200
220
240
0
200
400
600
800
1000
1200

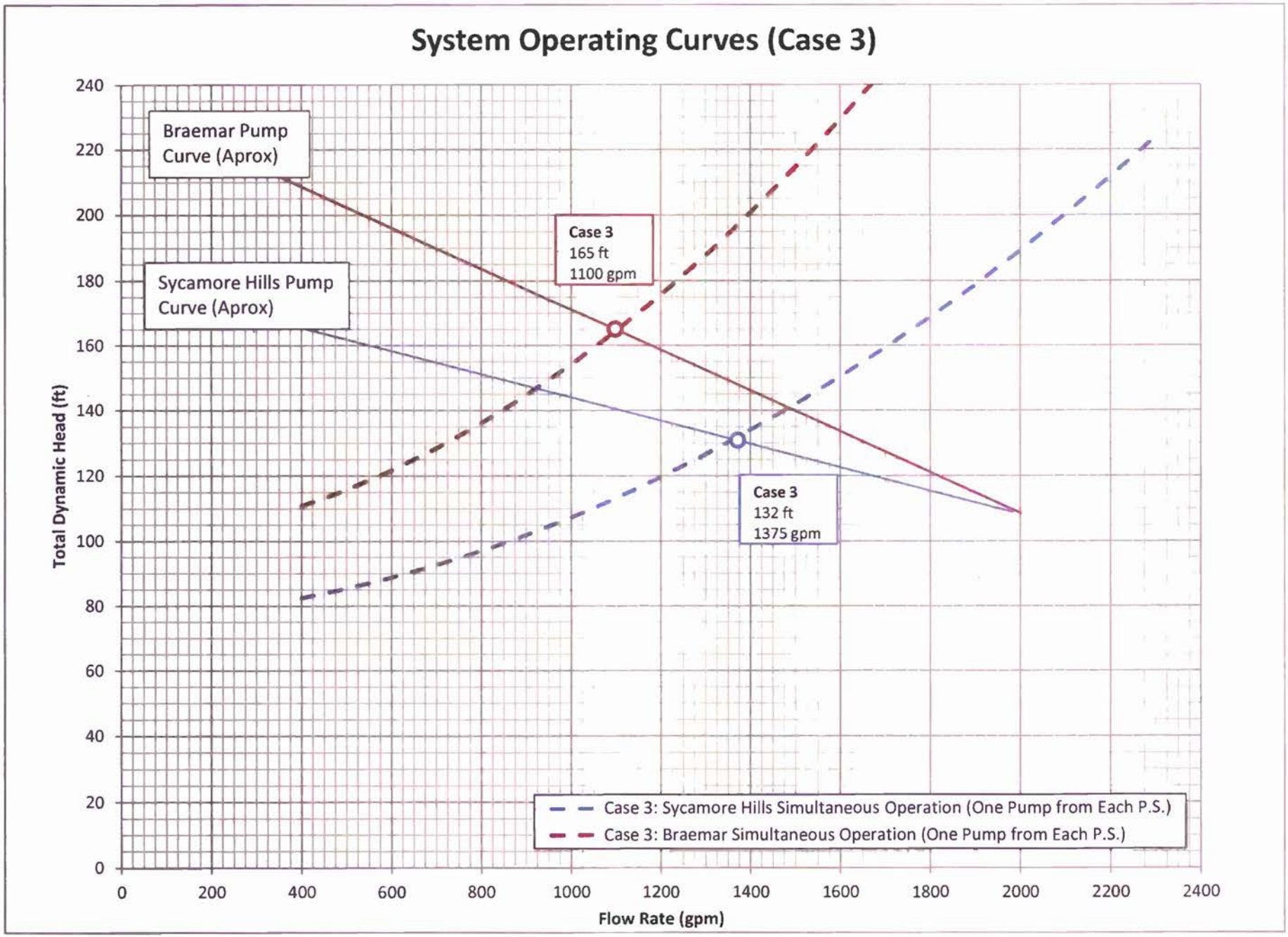
System Operating Curves (Case 3)
Braemar Pump Curve (Aprox)
Sycamore Hills Pump Curve (Aprox)
Case 3
165 ft
1100 gpm
Case 3
132 ft
1375 gpm
Case 3: Sycamore Hills Simultaneous Operation (One Pump from Each P.S.)
Case 3: Braemar Simultaneous Operation (One Pump from Each P.S.)
Total Dynamic Head (ft)
Flow Rate (gpm)
0
20
40
60
80
100
120
140
160
180
200
220
240
0
200
400
600
800
1000
1200
1400
1600
1800
2000
2200
2400

xylem
Let's Solve Water

Braemar
Pump Station

NP 3301 HT 3~ 464

Technical specification

FLYGT

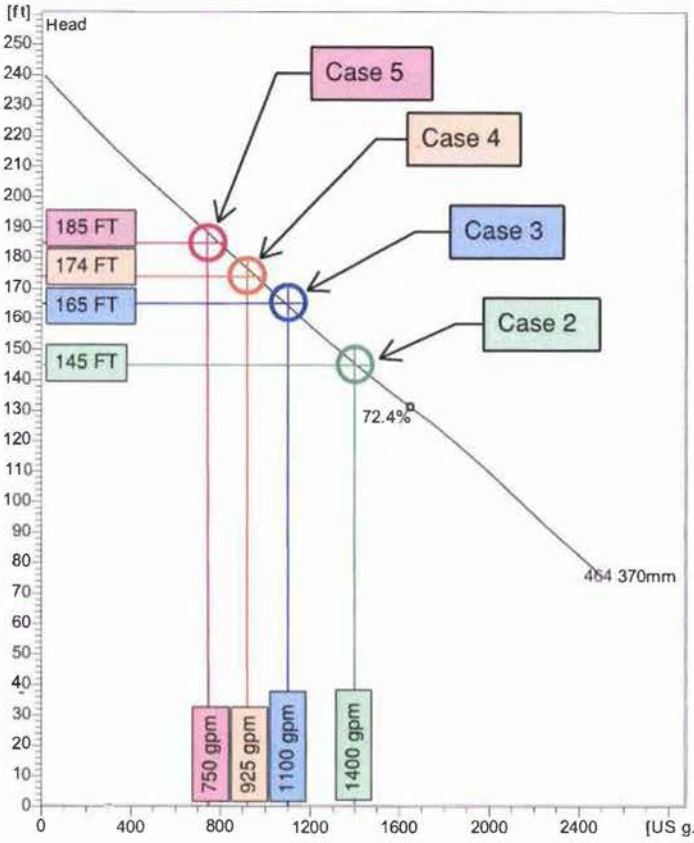

Curve according to: ISO 9906

Note: Picture might not correspond to the current configuration.

General

Patented self cleaning semi-open channel impeller, ideal for pumping in waste water applications. Possible to be upgraded with Guide-pin® for even better clogging resistance. Modular based design with high adaptation grade.

Impeller

Impeller material	Grey cast iron
Outlet width	150 mm
Inlet diameter	150 mm
Impeller diameter	370 mm
Number of blades	2

Motor

Motor #	N3301.180 35-25-4AA-W 85hp
Stator variant	
Frequency	60 Hz
Rated voltage	460 V
Number of poles	4
Phases	3~
Rated power	85 hp
Rated current	101 A
Starting current	490 A
Rated speed	1775 1/min
Power factor	
1/1 Load	0.85
3/4 Load	0.82
1/2 Load	0.74
Efficiency	
1/1 Load	92.5 %
3/4 Load	93.5 %
1/2 Load	93.5 %

Configuration

Installation: P - Semi permanent, Wet

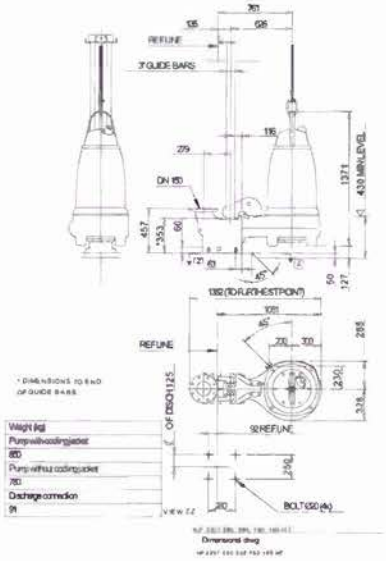

Project	Project ID	Created by	Created on	Last update
			2012-05-23	

Sycamore Hills Pump Station

PERFORMANCE CURVE

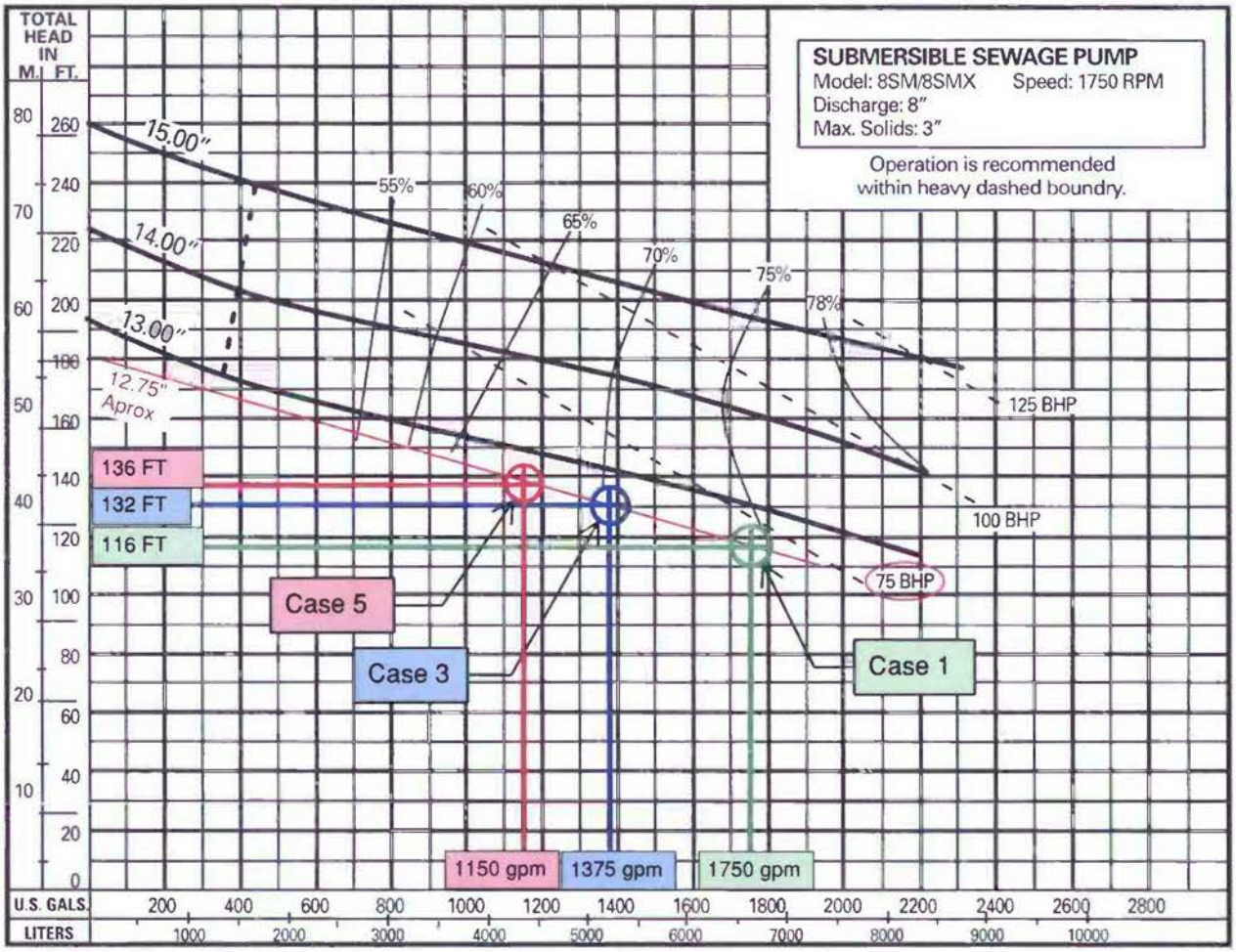

Available Models		Motor Electrical Data												
Standard	Explosion Proof	HP	Volts	Phase	Hz	Start Amps	Run Amps	Service Factor Amps	Run KW	Service Factor KW	Start KVA	Run KVA	NEC Code Letter	Service Factor
8SM750M4-43	8SMX750M4-43	75	460	3	60	540	101.8	122.2	64.2	77.0	430	81.0	G	1.2
8SM750M4-53	8SMX750M4-53	75	575	3	60	432	81.4	97.8	64.2	77.0	430	81.0	G	1.2
8SM1000M4-43	8SMX1000M4-43	100	460	3	60	725	129.0	155.0	85.7	103.0	578	103.0	G	1.2
8SM1000M4-53	8SMX1000M4-53	100	575	3	60	580	103.2	124.0	85.7	103.0	578	103.0	G	1.2
8SM1250M4-43	8SMX1250M4-43	125	460	3	60	725	165.0	175.0	108.0	115.0	578	131.0	G	1.1
8SM1250M4-53	8SMX1250M4-53	125	575	3	60	580	132.0	140.0	108.0	115.0	578	131.0	G	1.1

Motor Efficiencies and Power Factor									
		Motor Efficiency %				Power Factor %			
HP	Phase	Service Factor Load	100% Load	75% Load	50% Load	Service Factor Load	100% Load	75% Load	50% Load
75	3	87.1	87.1	87.3	83.5	79.1	79.2	79.1	79
100	3	87.0	88.0	87.0	84.0	83.4	83.4	79.2	77
125	3	86.0	86.3	88.0	87.0	82.5	82.0	80.0	78

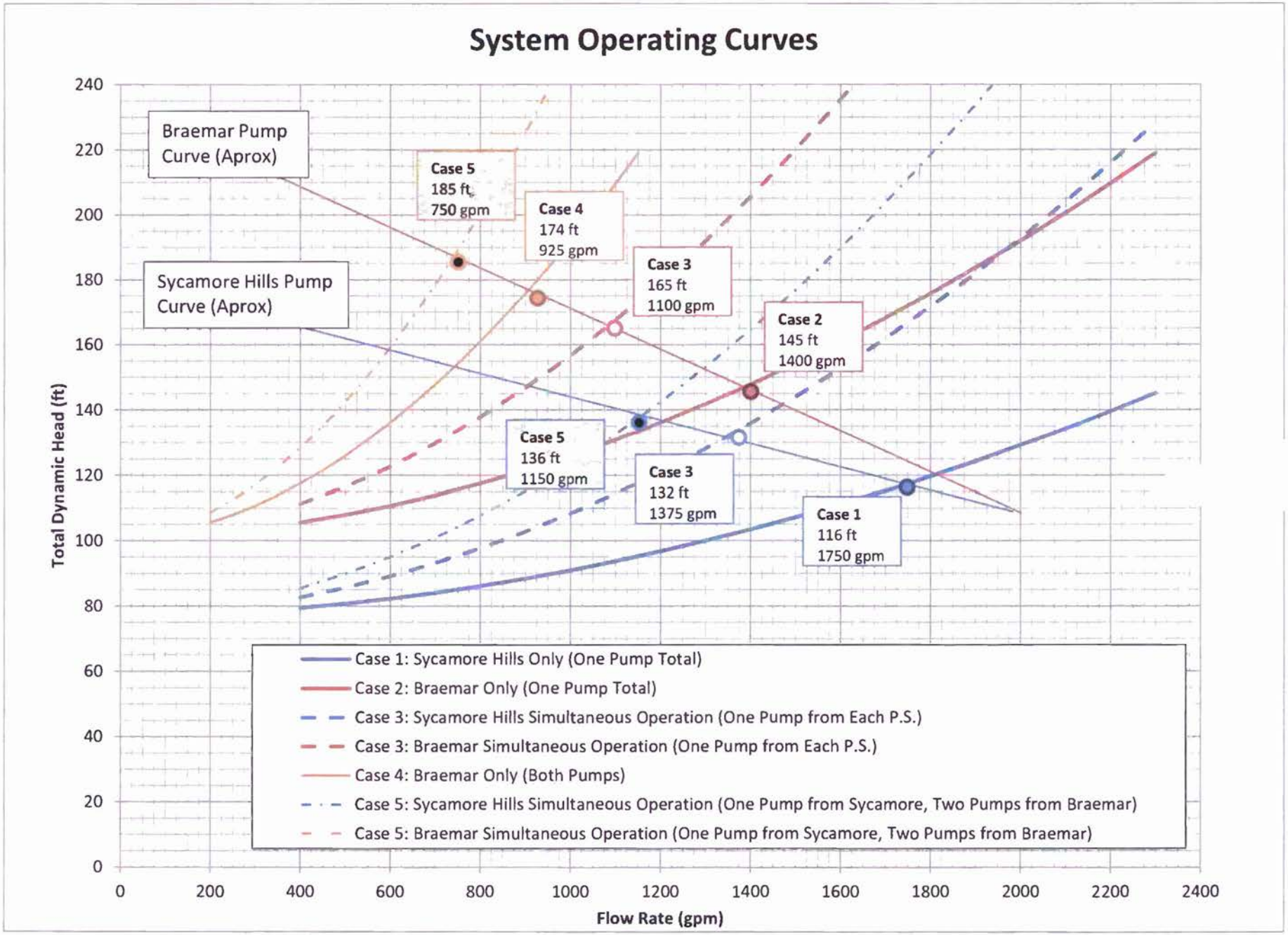
System Operating Curves
Braemar Pump Curve (Aprox)
Sycamore Hills Pump Curve (Aprox)
Case 5
185 ft
750 gpm
Case 4
174 ft
925 gpm
Case 3
165 ft
1100 gpm
Case 2
145 ft
1400 gpm
Case 5
136 ft
1150 gpm
Case 3
132 ft
1375 gpm
Case 1
116 ft
1750 gpm
Case 1: Sycamore Hills Only (One Pump Total)
Case 2: Braemar Only (One Pump Total)
Case 3: Sycamore Hills Simultaneous Operation (One Pump from Each P.S.)
Case 3: Braemar Simultaneous Operation (One Pump from Each P.S.)
Case 4: Braemar Only (Both Pumps)
Case 5: Sycamore Hills Simultaneous Operation (One Pump from Sycamore, Two Pumps from Braemar)
Case 5: Braemar Simultaneous Operation (One Pump from Sycamore, Two Pumps from Braemar)
Total Dynamic Head (ft)
Flow Rate (gpm)
0
20
40
60
80
100
120
140
160
180
200
220
240
0
200
400
600
800
1000
1200
1400
1600
1800
2000
2200
2400

PIPELINE HEADLOSS CALCULATIONS

PROJECT: Sycamore Hills PS force main to new 18" force main — Case 1

DATE: Aug-12

CALCULATION BASIS: MANNING'S EQN. FOR GRAVITY LINES AND HAZEN WILLIAMS FOR FORCE MAINS

INSTRUCTIONS:
1. Fill in pipeline description, basic information and number of fittings in misc. losses.
2. Fill in items in red only (text color on screen)
3. To print this worksheet, select Print_Area1 range, then hit print icon.

PIPELINE DESCRIPTION:

BASIC INFORMATION:

PIPE SIZE (INCHES):	8
PIPE LENGTH (FEET):	30
PIPE MATERIAL:	PVC
PIPELINE TYPE (GRAVITY=1 OR FORCEMAIN=2):	2
PUMP RATE (GPM)	1750

PIPELINE HEAD LOSS:

CALCULATED VELOCITY (FPS):	11.17	C=120
HEAD LOSS (FEET):		1.79

MISCELLANEOUS LOSSES (based on K factors)

VALVES	K FACTOR	QTY	TOTAL
GATE	0.11	0	0.00
ANGLE	0.77	0	0.00
GLOBE	4.80	0	0.00
CHECK	1.40	1	1.40
BUTTERFLY	0.63	0	0.00
PLUG	0.25	1	0.25
DIAPHRAGM	2.30	0	0.00
BENDS			
90 DEG STD	0.36	5	1.80
45 DEG STD	0.19	2	0.38
22.5 DEG STD	0.11	0	0.00
TEES			
RUN OF TEE	0.28	1	0.28
SIDE OUTLET	0.84	2	1.68
SUDDEN CONTRACTION			
Pipe Entrance	0.78	1	0.78
d/D=0.25	0.42	0	0.00
d/D=0.50	0.33	0	0.00
d/D=0.75	0.19	0	0.00
SUDDEN ENLARGEMENT			
Pipe Exit	1.00	0	0.00
d/D=0.25	0.92	0	0.00
d/D=0.50	0.56	0	0.00
d/D=0.75	0.19	0	0.00
		TOTAL K=	6.57

HEAD LOSS (FEET): 12.72

MISCELLANEOUS LOSSES (BASED ON VELOCITY):

					NUMBER	
INCREASERS	FROM(IN)	8	TO(IN):	18	1	0.47
DECREASERS	FROM(IN)	6	TO(IN):	4	0	0.00
MAG METERS	SIZE(IN):	6			0	0.00

MISCELLANEOUS LOSSES:

	NUMBER	
MANHOLES	0	0.00

			C=120
TOTAL HEADLOSS (FEET)=			14.98
	Elevations		
	High Point	Pump Off	
Static Head	790.00	779.00	11.00
Head Losses Due to Header and Suction Piping			7.00
TDH			32.98

PIPELINE HEADLOSS CALCULATIONS

PROJECT: New Aboite FM from tie-in at Sycamore Hills PS to Midwest WWTP **Case 1**

DATE: Aug-12

CALCULATION BASIS: MANNING'S EQN. FOR GRAVITY LINES AND HAZEN WILLIAMS FOR FORCE MAINS

INSTRUCTIONS:
1. Fill in pipeline description, basic information and number of fittings in misc. losses.
2. Fill in items in red only (text color on screen).
3. To print this worksheet, select Print_Area1 range, then hit print icon.

PIPELINE DESCRIPTION:

BASIC INFORMATION:

PIPE SIZE (INCHES):	17.53 18" PVC	
PIPE LENGTH (FEET):	18090 to high pt	24554 total length
PIPE MATERIAL:	PVC C905 DR 21	
PIPELINE TYPE (GRAVITY=1 OR FORCEMAIN=2):	2	
PUMP RATE (GPM)	1750	

PIPELINE HEAD LOSS:

CALCULATED VELOCITY (FPS):	2.33	C=120
HEAD LOSS (FEET):		23.63

MISCELLANEOUS LOSSES (based on K factors)

VALVES	K FACTOR	QTY	TOTAL
GATE	0.11	0	0.00
ANGLE	0.77	0	0.00
GLOBE	4.80	0	0.00
CHECK	1.40	1	1.40
BUTTERFLY	0.63	0	0.00
PLUG	0.25	1	0.25
DIAPHRAGM	2.30	0	0.00
BENDS			
90 DEG STD	0.36	0	0.00
45 DEG STD	0.19	12	2.28
22.5 DEG STD	0.11	12	1.32
TEES			
RUN OF TEE	0.28	1	0.28
SIDE OUTLET	0.84	0	0.00
SUDDEN CONTRACTION			
Pipe Entrance	0.78	1	0.78
d/D=0.25	0.42	0	0.00
d/D=0.50	0.33	0	0.00
d/D=0.75	0.19	0	0.00
SUDDEN ENLARGEMENT			
Pipe Exit	1.00	1	1.00
d/D=0.25	0.92	0	0.00
d/D=0.50	0.56	0	0.00
d/D=0.75	0.19	0	0.00
		TOTAL K=	7.31

HEAD LOSS (FEET): 0.61

MISCELLANEOUS LOSSES (BASED ON VELOCITY):

					NUMBER	
INCREASERS	FROM(IN)	8	TO(IN):	18	0	0.00
DECREASERS	FROM(IN)	6	TO(IN):	4	0	0.00
MAG METERS	SIZE(IN):	6			0	0.00

MISCELLANEOUS LOSSES:

	NUMBER	
MANHOLES	0	0.00

			C=120
TOTAL HEADLOSS (FEET)=			24.25
	Elevations		
	High Point	Start	
Static Head	849.00	790.00	59.00
Head Losses Due to Header and Suction Piping			0.00
TDH			83.25

PIPELINE HEADLOSS CALCULATIONS

PROJECT: Braemar PS force main to Tie-In **Case 2**

DATE: Aug-12

CALCULATION BASIS: MANNING'S EQN. FOR GRAVITY LINES AND HAZEN WILLIAMS FOR FORCE MAINS

INSTRUCTIONS:
1. Fill in pipeline description, basic information and number of fittings in misc. losses.
2. Fill in items in red only (text color on screen)
3. To print this worksheet, select Print_Area1 range, then hit print icon.

PIPELINE DESCRIPTION:

BASIC INFORMATION:

PIPE SIZE (INCHES):	11.65	12" PVC
PIPE LENGTH (FEET):	3966	
PIPE MATERIAL:	PVC	C900 DR18
PIPELINE TYPE (GRAVITY=1 OR FORCEMAIN=2):	2	
PUMP RATE (GPM)	1400	

PIPELINE HEAD LOSS:

CALCULATED VELOCITY (FPS):	4.21	C=120
HEAD LOSS (FEET):		25.08

MISCELLANEOUS LOSSES (based on K factors)

VALVES	K FACTOR	QTY	TOTAL
GATE	0.11	0	0.00
ANGLE	0.77	0	0.00
GLOBE	4.80	0	0.00
CHECK	1.40	2	2.80
BUTTERFLY	0.63	0	0.00
PLUG	0.25	1	0.25
DIAPHRAGM	2.30	0	0.00
BENDS			
90 DEG STD	0.36	2	0.72
45 DEG STD	0.19	13	2.47
22.5 DEG STD	0.11	10	1.10
TEES			
RUN OF TEE	0.28	2	0.56
SIDE OUTLET	0.84	0	0.00
SUDDEN CONTRACTION			
Pipe Entrance	0.78	1	0.78
d/D=0.25	0.42	0	0.00
d/D=0.50	0.33	0	0.00
d/D=0.75	0.19	0	0.00
SUDDEN ENLARGEMENT			
Pipe Exit	1.00	0	0.00
d/D=0.25	0.92	0	0.00
d/D=0.50	0.56	0	0.00
d/D=0.75	0.19	0	0.00
		TOTAL K=	8.68

HEAD LOSS (FEET): 2.39

MISCELLANEOUS LOSSES (BASED ON VELOCITY):

					NUMBER	
INCREASERS	FROM(IN)	12	TO(IN):	18	1	0.05
DECREASERS	FROM(IN)	6	TO(IN):	4	0	0.00
MAG METERS	SIZE(IN):	6			0	0.00

MISCELLANEOUS LOSSES:

	NUMBER	
MANHOLES	0	0.00

			C=120
TOTAL HEADLOSS (FEET)=			27.52
	Elevations		
	High Point	Pump Off	
Static Head	827.00	790.00	37.00
Head Losses Due to Header and Suction Piping			5.00
TDH			69.52

PIPELINE HEADLOSS CALCULATIONS

PROJECT: New Aboite FM from tie-in at Sycamore Hills PS to Midwest WWTP **Case 2**

DATE: Aug-12

CALCULATION BASIS: MANNING'S EQN. FOR GRAVITY LINES AND HAZEN WILLIAMS FOR FORCE MAINS

INSTRUCTIONS:
1. Fill in pipeline description, basic information and number of fittings in misc. losses.
2. Fill in items in red only (text color on screen)
3. To print this worksheet, select Print_Area1 range, then hit print icon.

PIPELINE DESCRIPTION:

BASIC INFORMATION:

PIPE SIZE (INCHES):	17.53	18" PVC
PIPE LENGTH (FEET):	18090	to high pt 24554 total length
PIPE MATERIAL:	PVC	C905 DR 21
PIPELINE TYPE (GRAVITY=1 OR FORCEMAIN=2):	2	
PUMP RATE (GPM)	1400	

PIPELINE HEAD LOSS:

CALCULATED VELOCITY (FPS):	1.86	C=120
HEAD LOSS (FEET):		15.63

MISCELLANEOUS LOSSES (based on K factors)

VALVES	K FACTOR	QTY	TOTAL
GATE	0.11	0	0.00
ANGLE	0.77	0	0.00
GLOBE	4.80	0	0.00
CHECK	1.40	1	1.40
BUTTERFLY	0.63	0	0.00
PLUG	0.25	1	0.25
DIAPHRAGM	2.30	0	0.00
BENDS			
90 DEG STD	0.36	0	0.00
45 DEG STD	0.19	12	2.28
22.5 DEG STD	0.11	12	1.32
TEES			
RUN OF TEE	0.28	1	0.28
SIDE OUTLET	0.84	0	0.00
SUDDEN CONTRACTION			
Pipe Entrance	0.78	1	0.78
d/D=0.25	0.42	0	0.00
d/D=0.50	0.33	0	0.00
d/D=0.75	0.19	0	0.00
SUDDEN ENLARGEMENT			
Pipe Exit	1.00	1	1.00
d/D=0.25	0.92	0	0.00
d/D=0.50	0.56	0	0.00
d/D=0.75	0.19	0	0.00
		TOTAL K=	7.31

HEAD LOSS (FEET): 0.39

MISCELLANEOUS LOSSES (BASED ON VELOCITY):

					NUMBER	
INCREASERS	FROM(IN)	8	TO(IN):	18	0	0.00
DECREASERS	FROM(IN)	6	TO(IN):	4	0	0.00
MAG METERS	SIZE(IN):	6			0	0.00

MISCELLANEOUS LOSSES:

	NUMBER	
MANHOLES	0	0.00

			C=120
TOTAL HEADLOSS (FEET)=			16.03
	Elevations		
	High Point	Start	
Static Head	849.00	790.00	59.00
Head Losses Due to Header and Suction Piping			0.00
TDH			75.03

PIPELINE HEADLOSS CALCULATIONS

PROJECT: Sycamore Hills PS force main to new 18" force main **Case 3**

DATE: Aug-12

CALCULATION BASIS: MANNING'S EQN. FOR GRAVITY LINES AND HAZEN WILLIAMS FOR FORCE MAINS

INSTRUCTIONS:
1. Fill in pipeline description, basic information and number of fittings in misc. losses.
2. Fill in items in red only (text color on screen)
3. To print this worksheet, select Print_Area1 range, then hit print icon.

PIPELINE DESCRIPTION:

BASIC INFORMATION:

PIPE SIZE (INCHES):	8
PIPE LENGTH (FEET):	30
PIPE MATERIAL:	PVC
PIPELINE TYPE (GRAVITY=1 OR FORCEMAIN=2):	2
PUMP RATE (GPM)	1375

PIPELINE HEAD LOSS:

CALCULATED VELOCITY (FPS):	8.78	C=120
HEAD LOSS (FEET):		1.14

MISCELLANEOUS LOSSES (based on K factors)

VALVES	K FACTOR	QTY	TOTAL
GATE	0.11	0	0.00
ANGLE	0.77	0	0.00
GLOBE	4.80	0	0.00
CHECK	1.40	1	1.40
BUTTERFLY	0.63	0	0.00
PLUG	0.25	1	0.25
DIAPHRAGM	2.30	0	0.00
BENDS			
90 DEG STD	0.36	5	1.80
45 DEG STD	0.19	2	0.38
22.5 DEG STD	0.11	0	0.00
TEES			
RUN OF TEE	0.28	1	0.28
SIDE OUTLET	0.84	2	1.68
SUDDEN CONTRACTION			
Pipe Entrance	0.78	1	0.78
d/D=0.25	0.42	0	0.00
d/D=0.50	0.33	0	0.00
d/D=0.75	0.19	0	0.00
SUDDEN ENLARGEMENT			
Pipe Exit	1.00	0	0.00
d/D=0.25	0.92	0	0.00
d/D=0.50	0.56	0	0.00
d/D=0.75	0.19	0	0.00
		TOTAL K=	6.57

HEAD LOSS (FEET): 7.86

MISCELLANEOUS LOSSES (BASED ON VELOCITY):

					NUMBER	
INCREASERS	FROM(IN)	8	TO(IN):	18	1	0.29
DECREASERS	FROM(IN)	6	TO(IN):	4	0	0.00
MAG METERS	SIZE(IN):	6			0	0.00

MISCELLANEOUS LOSSES:

	NUMBER	
MANHOLES	0	0.00

C=120

TOTAL HEADLOSS (FEET)= 9.29

	Elevations		
	High Point	Pump Off	
Static Head	790.00	779.00	11.00
Head Losses Due to Header and Suction Piping			7.00
TDH			27.29

PIPELINE HEADLOSS CALCULATIONS

PROJECT: Braemar PS force main to Tie-In — Case 3

DATE: Aug-12

CALCULATION BASIS: MANNING'S EQN. FOR GRAVITY LINES AND HAZEN WILLIAMS FOR FORCE MAINS

INSTRUCTIONS:
1. Fill in pipeline description, basic information and number of fittings in misc. losses.
2. Fill in items in red only (text color on screen)
3. To print this worksheet, select Print_Area1 range, then hit print icon.

PIPELINE DESCRIPTION:

BASIC INFORMATION:

PIPE SIZE (INCHES):	11.65	12" PVC
PIPE LENGTH (FEET):	3966	
PIPE MATERIAL:	PVC	C900 DR18
PIPELINE TYPE (GRAVITY=1 OR FORCEMAIN=2):	2	
PUMP RATE (GPM)	1100	

PIPELINE HEAD LOSS:

CALCULATED VELOCITY (FPS):	3.31	C=120
HEAD LOSS (FEET):		16.05

MISCELLANEOUS LOSSES (based on K factors)

VALVES	K FACTOR	QTY	TOTAL
GATE	0.11	0	0.00
ANGLE	0.77	0	0.00
GLOBE	4.80	0	0.00
CHECK	1.40	2	2.80
BUTTERFLY	0.63	0	0.00
PLUG	0.25	1	0.25
DIAPHRAGM	2.30	0	0.00
BENDS			
90 DEG STD	0.36	2	0.72
45 DEG STD	0.19	13	2.47
22.5 DEG STD	0.11	10	1.10
TEES			
RUN OF TEE	0.28	2	0.56
SIDE OUTLET	0.84	0	0.00
SUDDEN CONTRACTION			
Pipe Entrance	0.78	1	0.78
d/D=0.25	0.42	0	0.00
d/D=0.50	0.33	0	0.00
d/D=0.75	0.19	0	0.00
SUDDEN ENLARGEMENT			
Pipe Exit	1.00	0	0.00
d/D=0.25	0.92	0	0.00
d/D=0.50	0.56	0	0.00
d/D=0.75	0.19	0	0.00
		TOTAL K=	8.68

HEAD LOSS (FEET): 1.48

MISCELLANEOUS LOSSES (BASED ON VELOCITY):

					NUMBER	
INCREASERS	FROM(IN)	12	TO(IN):	18	1	0.03
DECREASERS	FROM(IN)	6	TO(IN):	4	0	0.00
MAG METERS	SIZE(IN):	6			0	0.00

MISCELLANEOUS LOSSES:

	NUMBER	
MANHOLES	0	0.00

			C=120
TOTAL HEADLOSS (FEET)=			17.55
	Elevations		
	High Point	Pump Off	
Static Head	827.00	790.00	37.00
Head Losses Due to Header and Suction Piping			5.00
TDH			59.55

PIPELINE HEADLOSS CALCULATIONS

PROJECT: New Aboite FM from tie-in at Sycamore Hills PS to Midwest WWTP **Case 3**

DATE: Aug-12

CALCULATION BASIS: MANNING'S EQN. FOR GRAVITY LINES AND HAZEN WILLIAMS FOR FORCE MAINS

INSTRUCTIONS:
1. Fill in pipeline description, basic information and number of fittings in misc. losses.
2. Fill in items in red only (text color on screen)
3. To print this worksheet, select Print_Area1 range, then hit print icon.

PIPELINE DESCRIPTION:

BASIC INFORMATION:

PIPE SIZE (INCHES):	17.53	18" PVC
PIPE LENGTH (FEET):	18090	to high pt 24554 total length
PIPE MATERIAL:	PVC	C905 DR 21
PIPELINE TYPE (GRAVITY=1 OR FORCEMAIN=2):	2	
PUMP RATE (GPM)	2475	

PIPELINE HEAD LOSS:

CALCULATED VELOCITY (FPS):	3.29	C=120
HEAD LOSS (FEET):		44.91

MISCELLANEOUS LOSSES (based on K factors)

VALVES	K FACTOR	QTY	TOTAL
GATE	0.11	0	0.00
ANGLE	0.77	0	0.00
GLOBE	4.80	0	0.00
CHECK	1.40	1	1.40
BUTTERFLY	0.63	0	0.00
PLUG	0.25	1	0.25
DIAPHRAGM	2.30	0	0.00
BENDS			
90 DEG STD	0.36	0	0.00
45 DEG STD	0.19	12	2.28
22.5 DEG STD	0.11	12	1.32
TEES			
RUN OF TEE	0.28	1	0.28
SIDE OUTLET	0.84	0	0.00
SUDDEN CONTRACTION			
Pipe Entrance	0.78	1	0.78
d/D=0.25	0.42	0	0.00
d/D=0.50	0.33	0	0.00
d/D=0.75	0.19	0	0.00
SUDDEN ENLARGEMENT			
Pipe Exit	1.00	1	1.00
d/D=0.25	0.92	0	0.00
d/D=0.50	0.56	0	0.00
d/D=0.75	0.19	0	0.00
		TOTAL K=	7.31

HEAD LOSS (FEET): 1.23

MISCELLANEOUS LOSSES (BASED ON VELOCITY):

					NUMBER	
INCREASERS	FROM(IN)	8	TO(IN):	18	0	0.00
DECREASERS	FROM(IN)	6	TO(IN):	4	0	0.00
MAG METERS	SIZE(IN):	6			0	0.00

MISCELLANEOUS LOSSES:

	NUMBER	
MANHOLES	0	0.00

C=120

TOTAL HEADLOSS (FEET)= 46.14

	Elevations High Point	Start	
Static Head	849.00	790.00	59.00
Head Losses Due to Header and Suction Piping			0.00
TDH			105.14

PIPELINE HEADLOSS CALCULATIONS

PROJECT: Braemar PS force main to Tie-In — Case 4

DATE: Aug-12

CALCULATION BASIS: MANNING'S EQN. FOR GRAVITY LINES AND HAZEN WILLIAMS FOR FORCE MAINS

INSTRUCTIONS:
1. Fill in pipeline description, basic information and number of fittings in misc. losses.
2. Fill in items in red only (text color on screen)
3. To print this worksheet, select Print_Area1 range, then hit print icon.

PIPELINE DESCRIPTION:

BASIC INFORMATION:

PIPE SIZE (INCHES):	11.65	12" PVC
PIPE LENGTH (FEET):	3966	
PIPE MATERIAL:	PVC	C900 DR18
PIPELINE TYPE (GRAVITY=1 OR FORCEMAIN=2):	2	
PUMP RATE (GPM)	1850	

PIPELINE HEAD LOSS:

CALCULATED VELOCITY (FPS):	5.57	C=120
HEAD LOSS (FEET):		42.03

MISCELLANEOUS LOSSES (based on K factors)

VALVES	K FACTOR	QTY	TOTAL
GATE	0.11	0	0.00
ANGLE	0.77	0	0.00
GLOBE	4.80	0	0.00
CHECK	1.40	2	2.80
BUTTERFLY	0.63	0	0.00
PLUG	0.25	1	0.25
DIAPHRAGM	2.30	0	0.00
BENDS			
90 DEG STD	0.36	2	0.72
45 DEG STD	0.19	13	2.47
22.5 DEG STD	0.11	10	1.10
TEES			
RUN OF TEE	0.28	2	0.56
SIDE OUTLET	0.84	0	0.00
SUDDEN CONTRACTION			
Pipe Entrance	0.78	1	0.78
d/D=0.25	0.42	0	0.00
d/D=0.50	0.33	0	0.00
d/D=0.75	0.19	0	0.00
SUDDEN ENLARGEMENT			
Pipe Exit	1.00	0	0.00
d/D=0.25	0.92	0	0.00
d/D=0.50	0.56	0	0.00
d/D=0.75	0.19	0	0.00
		TOTAL K=	8.68

HEAD LOSS (FEET): 4.18

MISCELLANEOUS LOSSES (BASED ON VELOCITY):

					NUMBER	
INCREASERS	FROM(IN)	12	TO(IN):	18	1	0.09
DECREASERS	FROM(IN)	6	TO(IN):	4	0	0.00
MAG METERS	SIZE(IN):	6			0	0.00

MISCELLANEOUS LOSSES:

	NUMBER	
MANHOLES	0	0.00

			C=120
TOTAL HEADLOSS (FEET)=			46.29
	Elevations		
	High Point	Pump Off	
Static Head	827.00	790.00	37.00
Head Losses Due to Header and Suction Piping			5.00
TDH			88.29

PIPELINE HEADLOSS CALCULATIONS

PROJECT: New Abolte FM from tie-in at Sycamore Hills PS to Midwest WWTP **Case 4**

DATE: Aug-12

CALCULATION BASIS: MANNING'S EQN. FOR GRAVITY LINES AND HAZEN WILLIAMS FOR FORCE MAINS

INSTRUCTIONS:
1. Fill in pipeline description, basic information and number of fittings in misc. losses.
2. Fill in items in red only (text color on screen)
3. To print this worksheet, select Print_Area1 range, then hit print icon.

PIPELINE DESCRIPTION:

BASIC INFORMATION:

PIPE SIZE (INCHES):	17.53	18" PVC
PIPE LENGTH (FEET):	18090	to high pt 24554 total length
PIPE MATERIAL:	PVC	C905 DR 21
PIPELINE TYPE (GRAVITY=1 OR FORCEMAIN=2):	2	
PUMP RATE (GPM)	1850	

PIPELINE HEAD LOSS:

CALCULATED VELOCITY (FPS):	2.46	C=120
HEAD LOSS (FEET):		26.20

MISCELLANEOUS LOSSES (based on K factors)

	K FACTOR	QTY	TOTAL
VALVES			
GATE	0.11	0	0.00
ANGLE	0.77	0	0.00
GLOBE	4.80	0	0.00
CHECK	1.40	1	1.40
BUTTERFLY	0.63	0	0.00
PLUG	0.25	1	0.25
DIAPHRAGM	2.30	0	0.00
BENDS			
90 DEG STD	0.36	0	0.00
45 DEG STD	0.19	12	2.28
22.5 DEG STD	0.11	12	1.32
TEES			
RUN OF TEE	0.28	1	0.28
SIDE OUTLET	0.84	0	0.00
SUDDEN CONTRACTION			
Pipe Entrance	0.78	1	0.78
d/D=0.25	0.42	0	0.00
d/D=0.50	0.33	0	0.00
d/D=0.75	0.19	0	0.00
SUDDEN ENLARGEMENT			
Pipe Exit	1.00	1	1.00
d/D=0.25	0.92	0	0.00
d/D=0.50	0.56	0	0.00
d/D=0.75	0.19	0	0.00
		TOTAL K=	7.31

HEAD LOSS (FEET): 0.69

MISCELLANEOUS LOSSES (BASED ON VELOCITY):

					NUMBER	
INCREASERS	FROM(IN)	8	TO(IN):	18	0	0.00
DECREASERS	FROM(IN)	6	TO(IN):	4	0	0.00
MAG METERS	SIZE(IN):	6			0	0.00

MISCELLANEOUS LOSSES:

	NUMBER	
MANHOLES	0	0.00

			C=120
TOTAL HEADLOSS (FEET)=			26.88
	Elevations		
	High Point	Start	
Static Head	849.00	790.00	59.00
Head Losses Due to Header and Suction Piping			0.00
TDH			85.88

PIPELINE HEADLOSS CALCULATIONS

PROJECT: Sycamore Hills PS force main to new 18" force main — Case 5

DATE: Aug-12

CALCULATION BASIS: MANNING'S EQN. FOR GRAVITY LINES AND HAZEN WILLIAMS FOR FORCE MAINS

INSTRUCTIONS:
1. Fill in pipeline description, basic information and number of fittings in misc. losses.
2. Fill in items in red only (text color on screen)
3. To print this worksheet, select Print_Area1 range, then hit print icon.

PIPELINE DESCRIPTION:

BASIC INFORMATION:

PIPE SIZE (INCHES):	8
PIPE LENGTH (FEET):	30
PIPE MATERIAL:	PVC
PIPELINE TYPE (GRAVITY=1 OR FORCEMAIN=2):	2
PUMP RATE (GPM)	1150

PIPELINE HEAD LOSS:

CALCULATED VELOCITY (FPS):	7.34	C=120
HEAD LOSS (FEET):		0.82

MISCELLANEOUS LOSSES (based on K factors)

		K FACTOR	QTY	TOTAL
VALVES				
	GATE	0.11	0	0.00
	ANGLE	0.77	0	0.00
	GLOBE	4.80	0	0.00
	CHECK	1.40	1	1.40
	BUTTERFLY	0.63	0	0.00
	PLUG	0.25	1	0.25
	DIAPHRAGM	2.30	0	0.00
BENDS				
	90 DEG STD	0.36	5	1.80
	45 DEG STD	0.19	2	0.38
	22.5 DEG STD	0.11	0	0.00
TEES				
	RUN OF TEE	0.28	1	0.28
	SIDE OUTLET	0.84	2	1.68
SUDDEN CONTRACTION				
	Pipe Entrance	0.78	1	0.78
	d/D=0.25	0.42	0	0.00
	d/D=0.50	0.33	0	0.00
	d/D=0.75	0.19	0	0.00
SUDDEN ENLARGEMENT				
	Pipe Exit	1.00	0	0.00
	d/D=0.25	0.92	0	0.00
	d/D=0.50	0.56	0	0.00
	d/D=0.75	0.19	0	0.00
			TOTAL K=	6.57

HEAD LOSS (FEET): 5.49

MISCELLANEOUS LOSSES (BASED ON VELOCITY):

					NUMBER	
INCREASERS	FROM(IN)	8	TO(IN):	18	1	0.20
DECREASERS	FROM(IN)	6	TO(IN):	4	0	0.00
MAG METERS	SIZE(IN):	6			0	0.00

MISCELLANEOUS LOSSES:

	NUMBER	
MANHOLES	0	0.00

			C=120
TOTAL HEADLOSS (FEET)=			6.52
	Elevations		
	High Point	Pump Off	
Static Head	790.00	779.00	11.00
Head Losses Due to Header and Suction Piping			7.00
TDH			24.52

PIPELINE HEADLOSS CALCULATIONS

PROJECT: Braemar PS force main to Tie-In — Case 5

DATE: Aug-12

CALCULATION BASIS: MANNING'S EQN. FOR GRAVITY LINES AND HAZEN WILLIAMS FOR FORCE MAINS

INSTRUCTIONS:
1. Fill in pipeline description, basic information and number of fittings in misc. losses.
2. Fill in items in red only (text color on screen)
3. To print this worksheet, select Print_Area1 range, then hit print icon.

PIPELINE DESCRIPTION:

BASIC INFORMATION:

PIPE SIZE (INCHES):	11.65	12" PVC
PIPE LENGTH (FEET):	3966	
PIPE MATERIAL:	PVC	C900 DR18
PIPELINE TYPE (GRAVITY=1 OR FORCEMAIN=2):	2	
PUMP RATE (GPM)	1500	

PIPELINE HEAD LOSS:

CALCULATED VELOCITY (FPS):	4.51	C=120
HEAD LOSS (FEET):		28.50

MISCELLANEOUS LOSSES (based on K factors)

		K FACTOR	QTY	TOTAL
VALVES				
	GATE	0.11	0	0.00
	ANGLE	0.77	0	0.00
	GLOBE	4.80	0	0.00
	CHECK	1.40	2	2.80
	BUTTERFLY	0.63	0	0.00
	PLUG	0.25	1	0.25
	DIAPHRAGM	2.30	0	0.00
BENDS				
	90 DEG STD	0.36	2	0.72
	45 DEG STD	0.19	13	2.47
	22.5 DEG STD	0.11	10	1.10
TEES				
	RUN OF TEE	0.28	2	0.56
	SIDE OUTLET	0.84	0	0.00
SUDDEN CONTRACTION				
	Pipe Entrance	0.78	1	0.78
	d/D=0.25	0.42	0	0.00
	d/D=0.50	0.33	0	0.00
	d/D=0.75	0.19	0	0.00
SUDDEN ENLARGEMENT				
	Pipe Exit	1.00	0	0.00
	d/D=0.25	0.92	0	0.00
	d/D=0.50	0.56	0	0.00
	d/D=0.75	0.19	0	0.00
			TOTAL K=	8.68

HEAD LOSS (FEET): 2.75

MISCELLANEOUS LOSSES (BASED ON VELOCITY):

					NUMBER	
INCREASERS	FROM(IN)	12	TO(IN):	18	1	0.06
DECREASERS	FROM(IN)	6	TO(IN):	4	0	0.00
MAG METERS	SIZE(IN):	6			0	0.00

MISCELLANEOUS LOSSES:

	NUMBER	
MANHOLES	0	0.00

			C=120
TOTAL HEADLOSS (FEET)=			31.30
	Elevations		
	High Point	Pump Off	
Static Head	827.00	790.00	37.00
Head Losses Due to Header and Suction Piping			5.00
TDH			73.30

PIPELINE HEADLOSS CALCULATIONS

PROJECT: New Aboite FM from tie-in at Sycamore Hills PS to Midwest WWTP **Case 5**

DATE: Aug-12

CALCULATION BASIS: MANNING'S EQN. FOR GRAVITY LINES AND HAZEN WILLIAMS FOR FORCE MAINS

INSTRUCTIONS:
1. Fill in pipeline description, basic information and number of fittings in misc. losses.
2. Fill in items in red only (text color on screen)
3. To print this worksheet, select Print_Area1 range, then hit print icon.

PIPELINE DESCRIPTION:

BASIC INFORMATION:

PIPE SIZE (INCHES):	17.53	18" PVC
PIPE LENGTH (FEET):	18090	to high pt 24554 total length
PIPE MATERIAL:	PVC	C905 DR 21
PIPELINE TYPE (GRAVITY=1 OR FORCEMAIN=2):	2	
PUMP RATE (GPM)	2650	

PIPELINE HEAD LOSS:

CALCULATED VELOCITY (FPS):	3.52	C=120
HEAD LOSS (FEET):		50.97

MISCELLANEOUS LOSSES (based on K factors)

VALVES	K FACTOR	QTY	TOTAL
GATE	0.11	0	0.00
ANGLE	0.77	0	0.00
GLOBE	4.80	0	0.00
CHECK	1.40	1	1.40
BUTTERFLY	0.63	0	0.00
PLUG	0.25	1	0.25
DIAPHRAGM	2.30	0	0.00
BENDS			
90 DEG STD	0.36	0	0.00
45 DEG STD	0.19	12	2.28
22.5 DEG STD	0.11	12	1.32
TEES			
RUN OF TEE	0.28	1	0.28
SIDE OUTLET	0.84	0	0.00
SUDDEN CONTRACTION			
Pipe Entrance	0.78	1	0.78
d/D=0.25	0.42	0	0.00
d/D=0.50	0.33	0	0.00
d/D=0.75	0.19	0	0.00
SUDDEN ENLARGEMENT			
Pipe Exit	1.00	1	1.00
d/D=0.25	0.92	0	0.00
d/D=0.50	0.56	0	0.00
d/D=0.75	0.19	0	0.00
		TOTAL K=	7.31

HEAD LOSS (FEET): 1.41

MISCELLANEOUS LOSSES (BASED ON VELOCITY):

					NUMBER	
INCREASERS	FROM(IN)	8	TO(IN):	18	0	0.00
DECREASERS	FROM(IN)	6	TO(IN):	4	0	0.00
MAG METERS	SIZE(IN):	6			0	0.00

MISCELLANEOUS LOSSES:

	NUMBER	
MANHOLES	0	0.00

			C=120
TOTAL HEADLOSS (FEET)=			52.37
	Elevations		
	High Point	Start	
Static Head	849.00	790.00	59.00
Head Losses Due to Header and Suction Piping			0.00
TDH			111.37

xylem
Let's Solve Water

NP 3301 HT 3~ 464
Technical specification

Braemar Pump Curve

FLYGT

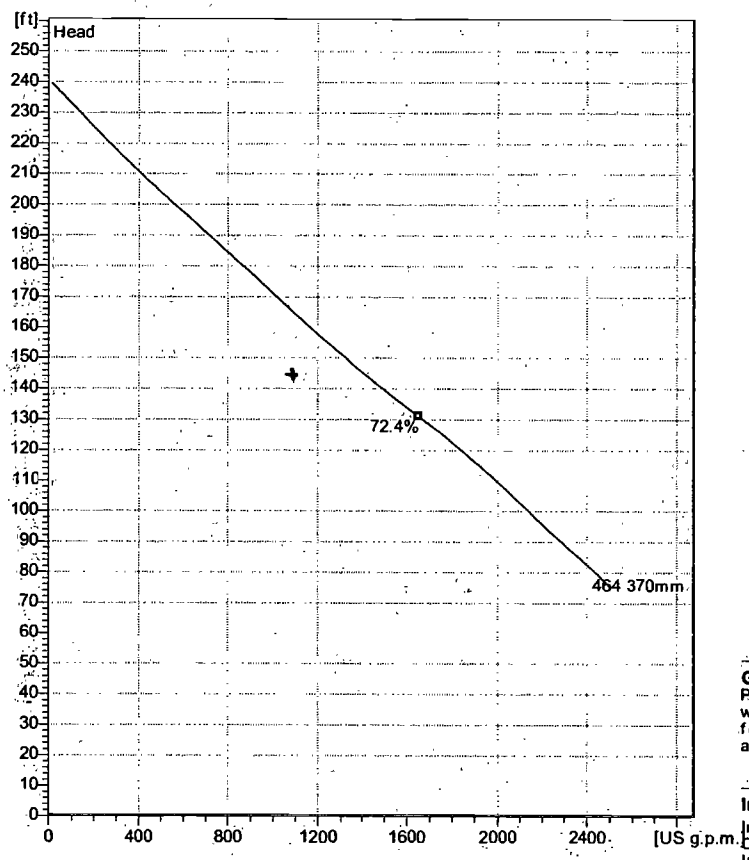

Curve according to: ISO 9906

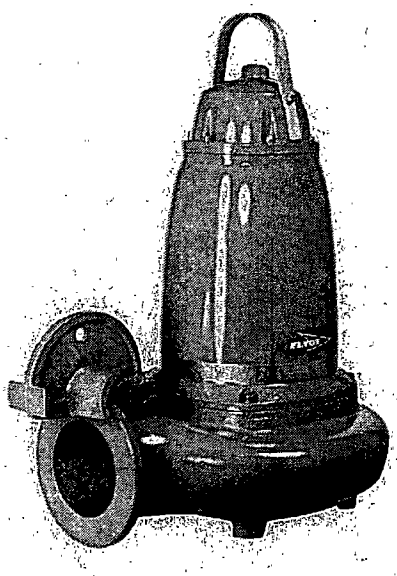

Note: Picture might not correspond to the current configuration.

General
Patented self cleaning semi-open channel impeller, ideal for pumping in waste water applications. Possible to be upgraded with Guide-pin® for even better clogging resistance. Modular based design with high adaptation grade.

Impeller

Impeller material	Grey cast iron
Outlet width	150 mm
Inlet diameter	150 mm
Impeller diameter	370 mm
Number of blades	2

Installation: P - Semi permanent, Wet

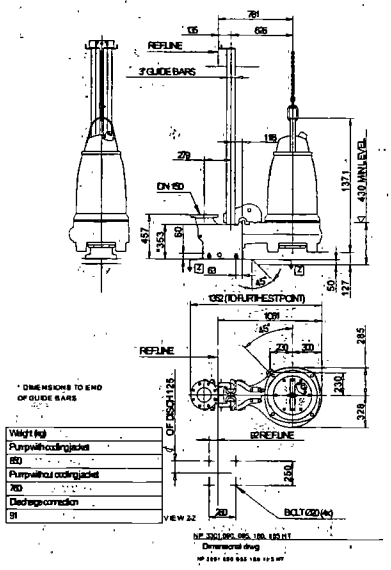

Motor

Motor #	N3301.180 35-25-4AA-W 85hp
Stator variant	
Frequency	60 Hz
Rated voltage	460 V
Number of poles	4
Phases	3~
Rated power	85 hp
Rated current	101 A
Starting current	490 A
Rated speed	1775 1/min
Power factor	
1/1 Load	0.85
3/4 Load	0.82
1/2 Load	0.74
Efficiency	
1/1 Load	92.5 %
3/4 Load	93.5 %
1/2 Load	93.5 %

Configuration

Aqua IN - Abolite Diversion

Project	Project ID	Created by	Created on	Last update
Braemar Rd			2012-05-23	

850 gpm at 150'
1100 gpm at 137'

SYCAMORE HILLS PUMP STATION (EXISTING)

PERFORMANCE CURVE

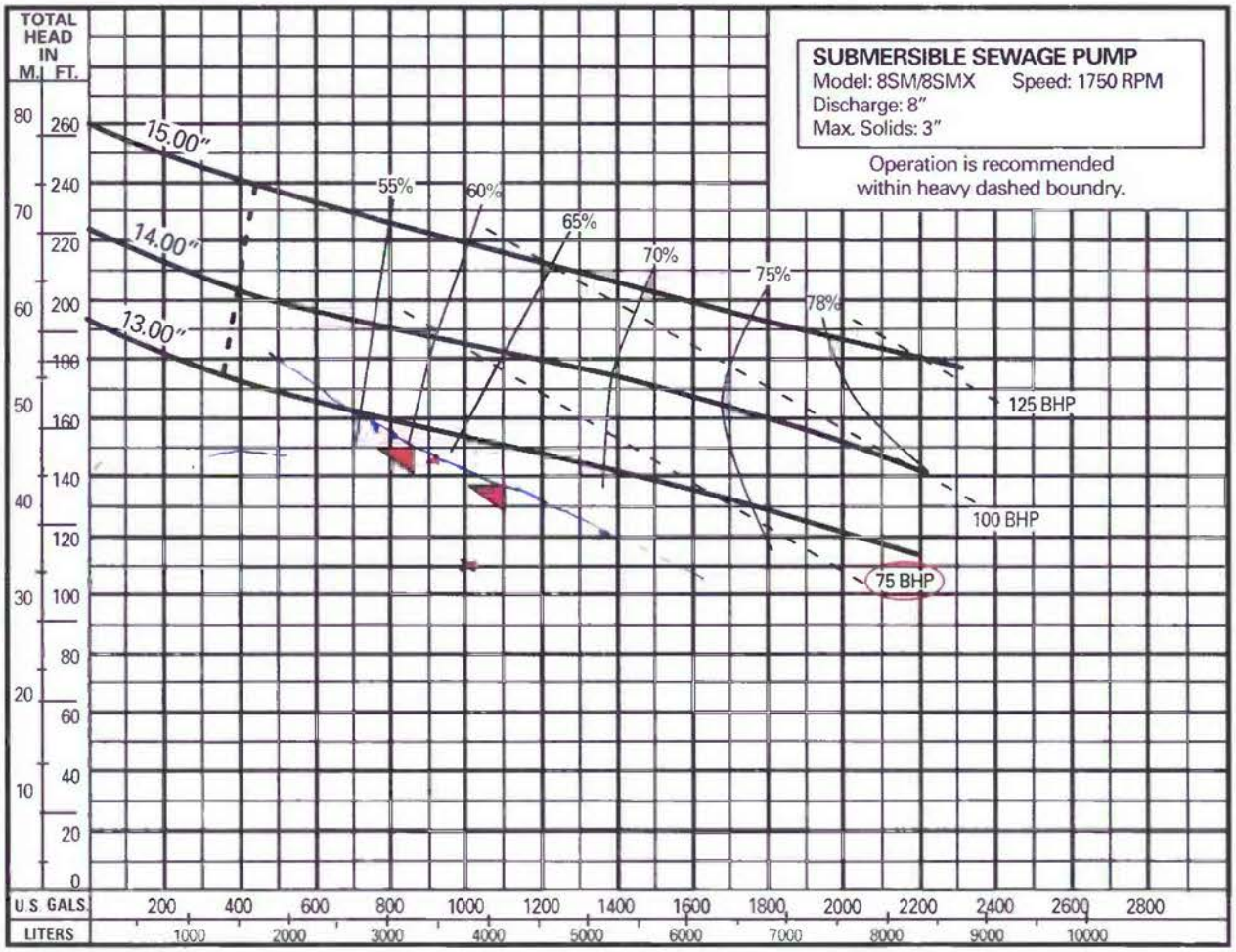

Available Models		Motor Electrical Data												
Standard	Explosion Proof	HP	Volts	Phase	Hz	Start Amps	Run Amps	Service Factor Amps	Run KW	Service Factor KW	Start KVA	Run KVA	NEC Code Letter	Service Factor
8SM750M4-43	8SMX750M4-43	75	460	3	60	540	101.8	122.2	64.2	77.0	430	81.0	G	1.2
8SM750M4-53	8SMX750M4-53	75	575	3	60	432	81.4	97.6	64.2	77.0	430	81.0	G	1.2
8SM1000M4-43	8SMX1000M4-43	100	460	3	60	725	129.0	155.0	85.7	103.0	578	103.0	G	1.2
8SM1000M4-53	8SMX1000M4-53	100	575	3	60	580	103.2	124.0	85.7	103.0	578	103.0	G	1.2
8SM1250M4-43	8SMX1250M4-43	125	460	3	60	725	165.0	175.0	108.0	115.0	578	131.0	G	1.1
8SM1250M4-53	8SMX1250M4-53	125	575	3	60	580	132.0	140.0	108.0	115.0	578	131.0	G	1.1

Motor Efficiencies and Power Factor									
		Motor Efficiency %				Power Factor %			
HP	Phase	Service Factor Load	100% Load	75% Load	50% Load	Service Factor Load	100% Load	75% Load	50% Load
75	3	87.1	87.1	87.3	83.5	79.1	79.2	79.1	79
100	3	87.0	88.0	87.0	84.0	83.4	83.4	79.2	77
125	3	86.0	86.3	88.0	87.0	82.5	82.0	80.0	78

INDIANA DEPARTMENT OF ENVIRONMENTAL MANAGEMENT
We Protect Hoosiers and Our Environment.

Mitchell E. Daniels, Jr.
Governor

Thomas W. Easterly
Commissioner

100 North Senate Avenue
Indianapolis, Indiana 46204
(317) 232-8603
Toll Free (800) 451-6027
www.idem.IN.gov

February 25, 2009

VIA CERTIFIED MAIL 7002 0510 0002 7965 5139

Mr. William Etzler, Vice President
Utility Center, Inc.
2200 West Cook Road
Fort Wayne, Indiana 46804

Dear Mr. Etzler:

Re: Final NPDES Permit No. IN0042391
Utility Center, Inc. – Midwest
Wastewater Treatment Plant
Allen County

Your application for a National Pollutant Discharge Elimination System (NPDES) permit has been processed in accordance with Sections 402 and 405 of the Federal Water Pollution Control Act as amended, (33 U.S.C. 1251, et seq.), and IDEM's permitting authority under IC 13-15. The enclosed NPDES permit covers your discharges to Graham McCulloch Ditch. All discharges from this facility shall be consistent with the terms and conditions of this permit.

One condition of your permit requires monthly reporting of several effluent parameters. Reporting is to be done on the Monthly Report of Operation (MRO) form. This form is available on the internet at the following web site:

http://www.in.gov/idem/5104.htm

You should duplicate this form as needed for future reporting.

Another condition which needs to be clearly understood concerns violation of the effluent limitations in the permit. Exceeding the limitations constitutes a violation of the permit and may bring criminal or civil penalties upon the permittee. (See Part II.A.1 and II.A.11 of this permit). It is very important that your office and treatment operator understand this part of the permit.

Please note that this permit issuance can be appealed. An appeal must be filed under procedures outlined in IC 13-15-6, IC 4-21.5, and the enclosed public notice. The appeal must be initiated by you within 18 days from the date this letter is postmarked, by filing a request for an adjudicatory hearing with the Office of Environmental Adjudication (OEA), at the following address:

Office of Environmental Adjudication
Indiana Government Center North
100 North Senate Avenue, Room 501
Indianapolis, IN 46204

Please send a copy of any such appeal to me at IDEM, Office of Water Quality-Mail Code 65-42, 100 North Senate Avenue, Indianapolis, Indiana 46204-2251.

The permit should be read and studied. It requires certain action at specific times by you, the discharger, or your authorized representative. One copy of this permit is also being sent to your operator to be kept at the treatment facility. You may wish to call this permit to the attention of your consulting engineer and/or attorney.

If you have any questions concerning your NPDES permit, please contact Jason House at 317/233-0470. Questions concerning appeal procedures should be directed to the Office of Environmental Adjudication, at 317/232-8591.

Sincerely,

Bruno Pigott
Assistant Commissioner
Office of Water Quality

Enclosures
cc: Allen County Health Department
Mark W. Aurich, Certified Operator
U.S. EPA, Region 5

STATE OF INDIANA

DEPARTMENT OF ENVIRONMENTAL MANAGEMENT

AUTHORIZATION TO DISCHARGE UNDER THE

NATIONAL POLLUTANT DISCHARGE ELIMINATION SYSTEM

In compliance with the provisions of the Federal Water Pollution Control Act, as amended, (33 U.S.C. 1251 et seq., the "Act"), Title 13 of the Indiana Code, and regulations adopted by the Water Pollution Control Board, the Indiana Department of Environmental Management (IDEM) is issuing this permit to

UTILITY CENTER, INC.

hereinafter referred to as "the permittee." The permittee owns and/or operates the **Utility Center, Inc. – Midwest Wastewater Treatment Plant**, a major semi-public wastewater treatment plant located at 6811 Engle Road, Fort Wayne, Indiana, Allen County. The permittee is hereby authorized to discharge from the outfalls identified in Part I of this permit to receiving waters named Graham McCulloch Ditch in accordance with the effluent limitations, monitoring requirements, and other conditions set forth in the permit. This permit may be revoked for the nonpayment of applicable fees in accordance with IC 13-18-20.

Effective Date: June 1, 2009.

Expiration Date: May 31, 2014.

In order to receive authorization to discharge beyond the date of expiration, the permittee shall submit such information and application forms as are required by the Indiana Department of Environmental Management. The application shall be submitted to IDEM at least 180 days prior to the expiration date of this permit, unless a later date is allowed by the Commissioner in accordance with 327 IAC 5-3-2 and Part II.A.4 of this permit.

Issued on February 25, 2009, for the Indiana Department of Environmental Management.

Bruno Pigott
Assistant Commissioner
Office of Water Quality

TREATMENT FACILITY DESCRIPTION

The permittee currently operates a Class III, 1.25 MGD (rated at 1.7 MGD as the design flow in accordance with the January 12, 2006 Joint Stipulation for Stay and Agreed Entry between IDEM and Utility Center, Inc.) activated sludge treatment facility consisting of fine screening, single stage nitrification biological treatment, two final clarifiers, post aeration, and ultraviolet light disinfection. Waste sludge is stored in aerated sludge holding tanks and a belt filter press is used to dewater solids prior to disposal.

The mass limitations included in this permit are based upon item 3, Page 2 of 4 of the January 12, 2006, Joint Stipulation for Stay and Agreed Entry between IDEM and Utility Center, Inc.

The collection system is comprised of 100% separate sanitary sewers by design with one overflow point (Outfall 003). Please note that all sanitary sewer overflows are strictly prohibited. Please refer to Attachment A of this permit for sanitary sewer overflow requirements.

PART I

A. EFFLUENT LIMITATIONS AND MONITORING REQUIREMENTS

The permittee is authorized to discharge from the outfall listed below in accordance with the terms and conditions of this permit. The permittee shall take samples and measurements at a location representative of each discharge to determine whether the effluent limitations have been met. Refer to Part I.B of this permit for additional monitoring and reporting requirements.

1. Beginning on the effective date of this permit, the permittee is authorized to discharge from Outfall 001, which is located at Latitude: 41° 02' 24", Longitude: 85° 13' 57". The discharge is subject to the following requirements:

TABLE 1

	Quantity or Loading			Quality or Concentration			Monitoring Requirements	
Parameter	Monthly Average	Weekly Average	Units	Monthly Average	Weekly Average	Units	Measurement Frequency	Sample Type
Flow [1]	Report	Report	MGD	----	----	----	Daily	24-Hr. Total
$CBOD_5$	333.6	500.4	lbs/day	10	15	mg/l	5 X Weekly	24-Hr. Composite
TSS	333.6	500.4	lbs/day	10	15	mg/l	5 X Weekly	24-Hr. Composite
Ammonia-nitrogen								
Summer [2]	50.0	76.7	lbs/day	1.5	2.3	mg/l	5 X Weekly	24-Hr. Composite
Winter [3]	73.4	110.1	lbs/day	2.2	3.3	mg/l	5 X Weekly	24-Hr. Composite

ATTACHMENT A

Sanitary Sewer Overflows (SSOs)

Overflows in the sanitary sewer system or in a sanitary portion of a combined sewer system are expressly **prohibited** from discharging at any time. Should any release from the sanitary sewer system occur, the permittee is required to notify the Compliance Evaluation Section of the Office of Water Quality orally within twenty-four (24) hours and in writing within five (5) days of the event in accordance with the requirements in Part II.C.3.d of this permit. The correspondence shall include the duration and cause of discharge as well as the remedial action taken to eliminate it. The overflow duration and estimated flow shall also be reported on the Monthly Report of Operation form.

The following SSO point has been identified as being present in the collection system:

SSO #	Location	Receiving Stream
003	Briarwood Hills Lift Station Latitude: 41° 3' 9" Longitude: 85° 14' 7"	Unnamed tributary to Moorman Ditch

mapquest

Map of:
6811 Engle Rd
Fort Wayne, IN 46804-2225

Notes
Midwest Semi-Public
WWTP

MM

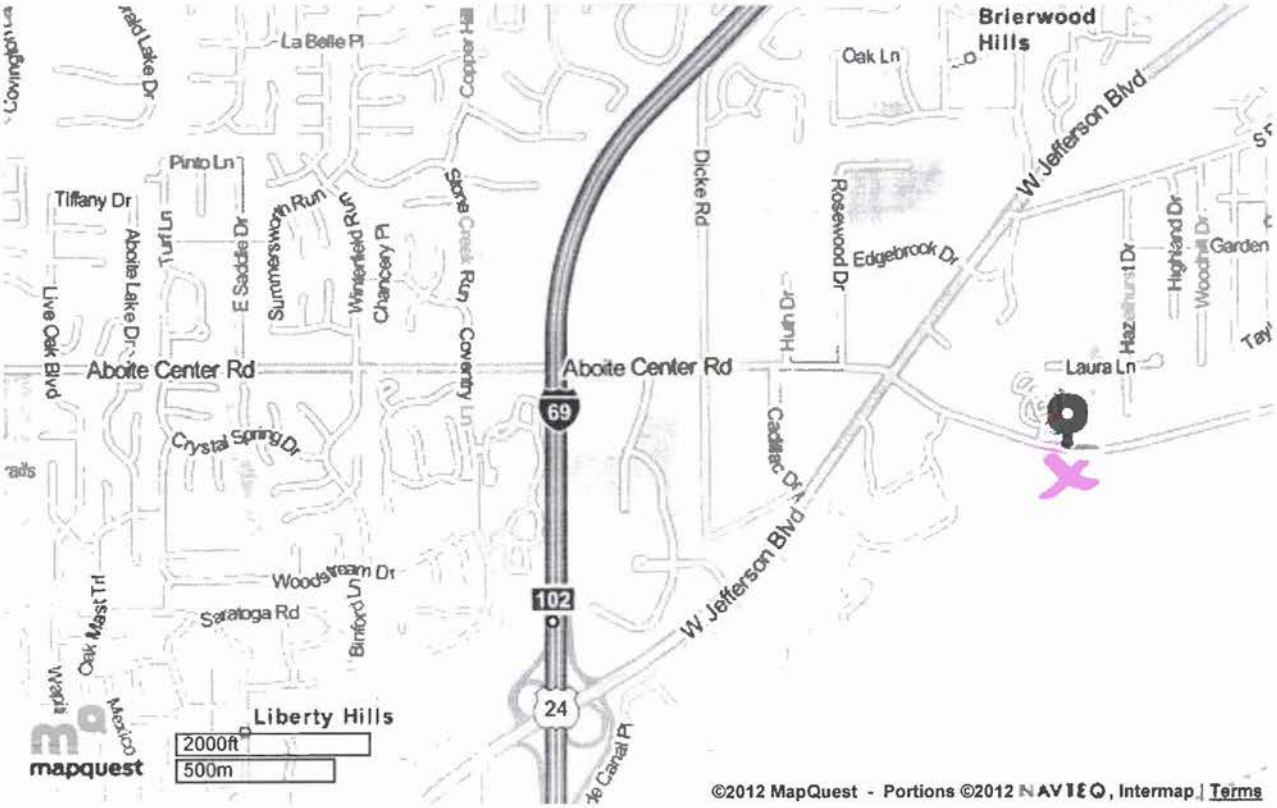

©2011 MapQuest, Inc. Use of directions and maps is subject to the MapQuest Terms of Use. We make no guarantee of the accuracy of their content, road conditions or route usability. You assume all risk of use. View Terms of Use

CAPACITY CERTIFICATION/ALLOCATION LETTER

This form must be filled-out in its entirety.

Name of applicant: Utility Center, Inc. dba Aqua Indiana, Inc.
Name of owner: Utility Center, Inc. dba Aqua Indiana, Inc.
Name of project: Braemar Pump Station and Force Main; Aboite Diversion Force Main

CERTIFICATION

I, William L.G. Etzler (Name of individual), representing the Utility Center Inc. dba Aqua Indiana, Inc. (Name of city or town), in my capacity as Vice President, Regional Manager (Title) have the authority to act on behalf of the Utility Center, Inc. dba Aqua Indiana. Inc. (Name of city or town)

certify that I have reviewed and understand the requirements of 327 IAC 3 and that the sanitary collection system proposed, with the submission of this application, plans and specifications, meets all requirements of 327 IAC 3. I certify that the daily flow generated in the area that will be collected by the project system will not cause overflowing or bypassing in the collection system other than NPDES authorized discharge points and that there is sufficient capacity in the receiving water pollution treatment/control facility to treat the additional daily flow and remain in compliance with applicable NPDES permit effluent limitations. I certify that the proposed average flow will not result in hydraulic or organic overload. I certify that the proposed collection system does not include new combined sewers or a combined sewer extension to existing combined sewers. I certify that the ability for this collection system to comply with 327 IAC 3 is not contingent on water pollution/control facility construction that has not been completed and put into operation. I certify that the project meets all local rules or laws, regulations and ordinances. The information submitted is true, accurate, and complete, to the best of my knowledge and belief. I am aware that there are significant penalties for submitting false information, including the possibility of fine and imprisonment.

Gallons per day (Total Average Flow for Project)	792,000
Wastewater treatment plant (Name of WWTP)	Midwest WWTP
Sewers (Owners of sewers)	Utility Center, Inc. dba Aqua Indiana, Inc.
Signature	Date Signed *(month, day, year)* 06 / 27 / 2012

(Please refer to IC 13-30-10 for penalties of submission of false information.

JUL 13

CERTIFICATION OF REGISTERED PROFESSIONAL ENGINEER OR LAND SURVEYOR LETTER

This form must be filled-out in its entirety.

Name of applicant: Utility Center, Inc. dba Aqua Indiana, Inc.
Name of owner: Utility Center, Inc. dba Aqua Indiana, Inc.
Name of project: Braemar Pump Station and Force Main; Aboite Diversion Force Main

CERTIFICATION

I, Casey M. Erwin (Name of individual), representing the project applicant, in my capacity as a registered professional (Name of city or town) Engineer (Engineer or Land Surveyor), 10001102 (Indiana registration number) certify the following under penalty of law: The design of this project has been performed under my direction or supervision to assure conformance with 327 IAC 3 and the plans and specifications require the construction of said project to be performed in conformance with 327 IAC 3-6. The peak daily flow rates, in accordance with 327 IAC 3-6-11 generated from within the specific area that will be collected by the proposed collection system that is the subject of the application, plans, and specifications (when functioning as designed and properly installed), will not cause overflowing or bypassing in the same specific area serviced by the proposed collection system other than from NPDES authorized discharge points. The proposed collection system does not include new combined sewers (serving new areas) or a combined sewer extension to existing combined sewers. The sewer at the point of connection is physically in existence and operational. Based upon information provided by the owner of the Wastewater System, the ability for this collection system to comply with 327 IAC 3 is not contingent on downstream water pollution/control facility construction that has not been completed and put into operation. The design of the proposed project meets applicable local rules or laws, regulations and ordinances. The information submitted is true, accurate, and complete, to the best of my knowledge and belief. I am aware that there are significant penalties for submitting false information, including the possibility of fine and imprisonment.

Gallons per day (Total Average Flow for Project)	792,000
Wastewater treatment plant (Name of WWTP)	Midwest WWTP
Sewers (Owners of sewers)	Aqua Indiana, Inc.
Signature	Date Signed *(month, day, year)* 6/26/12

(Please refer to IC 13-30-10 for penalties of submission of false information.

CASEY M. ERWIN REGISTERED No. 10001102 STATE OF INDIANA PROFESSIONAL ENGINEER

JUL 03 2012

IDENTIFICATION OF POTENTIALLY AFFECTED PERSONS

Please list any and all persons whom you have reason to believe have a substantial or proprietary interest in this matter, or could otherwise be considered to be potentially affected under law. Failure to notify a person who is later determined to be potentially affected could result in voiding our decision on procedural grounds. To ensure conformance with Administrative Orders and Procedures Act (AOPA), please list all such parties. The letter on the opposite side of this form will further explain the requirements under the AOPA. Attach additional names and addresses on a separate sheet of paper, as needed. **SEE ATTACHED LIST**

Name	
Address (*number and street*)	
City	
State	ZIP

Name	
Address (*number and street*)	
City	
State	ZIP

Name	
Address (*number and street*)	
City	
State	ZIP

Name	
Address (*number and street*)	
City	
State	ZIP

Name	
Address (*number and street*)	
City	
State	ZIP

Name	
Address (*number and street*)	
City	
State	ZIP

Name	
Address (*number and street*)	
City	
State	ZIP

Name	
Address (*number and street*)	
City	
State	ZIP

CERTIFICATION

I certify that to the best of my knowledge I have listed all potentially affected parties, as defined by IC 4-21.5-3-4.

Proposed facility name Braemar Pump Station and Force Main; Aboite Diversion Force Main	Printed Name William L. G. Etzler
City Fort Wayne	Signature William L. G. Etzler
County Allen	Date (*month, day, year*) 08 / 15 / 2012

IDENTIFICATION OF POTENTIALLY AFFECTED PERSONS

Please list any and all persons whom you have reason to believe have a substantial or proprietary interest in this matter, or could otherwise be considered to be potentially affected under law. Failure to notify a person who is later determined to be potentially affected could result in voiding our decision on procedural grounds. To ensure conformance with Administrative Orders and Procedures Act (AOPA), please list all such parties. The letter on the opposite side of this form will further explain the requirements under the AOPA. Attach additional names and addresses on a separate sheet of paper, as needed. **SEE ATTACHED LIST**

Name	
Address (*number and street*)	
City	
State	ZIP

Name	
Address (*number and street*)	
City	
State	ZIP

Name	
Address (*number and street*)	
City	
State	ZIP

Name	
Address (*number and street*)	
City	
State	ZIP

Name	
Address (*number and street*)	
City	
State	ZIP

Name	
Address (*number and street*)	
City	
State	ZIP

Name	
Address (*number and street*)	
City	
State	ZIP

Name	
Address (*number and street*)	
City	
State	ZIP

CERTIFICATION

JUL 03 2012

I certify that to the best of my knowledge I have listed all potentially affected parties, as defined by IC 4-21.5-3-4.

Proposed facility name	Printed Name
City	Signature
County	Date (*month, day, year*) / /

POTENTIALLY AFFECTED PARTIES
AQUA INDIANA, INC.
ABOITE DIVERSION FORCE MAIN

NAME	ADDRESS	CITY	STATE	ZIP
Keith Busse	11522 W Sycamore Hills Drive	Fort Wayne	IN	46814
Katherine Probst	11430 Covington Road	Fort Wayne	IN	46804
Gary Probst	12207 Illinois Road	Fort Wayne	IN	46804
John & Leslie Williams	3104 Eggeman Road	Fort Wayne	IN	46804
Christopher & Angela Weidler	3130 Eggeman Road	Fort Wayne	IN	46804
Robert & Stephanie Robinson	3126 Labalme Trail	Fort Wayne	IN	46804
Stephen & Margaret Coats	12202 Sylvan Meadows Drive	Fort Wayne	IN	46804
Panduranga & Jyothi Reddy	3170 Eggemann Road	Fort Wayne	IN	46814
Dennis & Maureen Kearney	3623 Eggemann Road	Fort Wayne	IN	46814
Keith & Linda Robinson	3808 Eggemann Road	Fort Wayne	IN	46814
Scott & Robin Lougheed	3633 Eggemann Road	Fort Wayne	IN	46804
Andrew & Janet Katz	11207 Chestnut Ridge Court	Fort Wayne	IN	46814
Charles & Georgia Dwyer	3907 Eggemann Road	Fort Wayne	IN	46804
Charles & Lynn Kingdon	3909 Eggemann Road	Fort Wayne	IN	46814
Bruce & Lisa Cole	3927 Eggemann	Fort Wayne	IN	46814
Charles & Susan Chambers	5885 S 960 E	Wolcottville	IN	46795
Frederick & Marcia Bruggeman	PO Box 11529	Fort Wayne	IN	46859
Jesus & Christyn Unzueta	3902 Eggemann Road	Fort Wayne	IN	46814
Joann Woodward	11615 Aboite Center Road	Fort Wayne	IN	46804
Aboite Township	11321 Aboite Center Road	Fort Wayne	IN	46804
Southwest Allen County Schools	4510 Homestead Road	Fort Wayne	IN	46804
Douglas Witte	11226 Aboite Center Road	Fort Wayne	IN	46804
Jeffrey Hahn	120 Pasito Terrace Apt 319	Sunnyvale	CA	94086
Moberg Properties LLC	9633 Saratoga Road	Fort Wayne	IN	46804
Coventry Baptist Church Inc.	10926 Aboite Center Road	Fort Wayne	IN	46804
Whitley County REMC c/o Northeastern REMC	4901 E Park 30 Drive	Columbia City	IN	46725
Aqua Indiana	1111 West Hamilton Road	Fort Wayne	IN	46814
Allen County Board of Commissioners	200 East Berry Street Ste 410	Fort Wayne	IN	46802
Jefferson Place Condominiums	5717 W Jefferson Boulevard	Fort Wayne	IN	46804
Opthalmology Real Estate	7232 Engle Road	Fort Wayne	IN	46804
Jefferson Medical Park c/o Shephard Group	7230 Engle Road Ste 330	Fort Wayne	IN	46804
Ridgewood Medical Park LLC	3838 N Washington Street	Fort Wayne	IN	468074
Rita Terry	4124 Rosewood Drive	Fort Wayne	IN	46804

POTENTIALLY AFFECTED PARTIES
AQUA INDIANA, INC.
ABOITE DIVERSION FORCE MAIN

NAME	ADDRESS	CITY	STATE	ZIP
Darrell & Karol Adams	7620 Aboite Center Road	Fort Wayne	IN	46804
Milton & Pamela King	7624 Aboite Center Road	Fort Wayne	IN	46804
Donald & Anna Wenger	7630 Aboite Center Road	Fort Wayne	IN	46804
Lawrence Finkel	10220 Circlewood Drive	Fort Wayne	IN	46804
Ted Stanley	7716 Aboite Center Road	Fort Wayne	IN	46804
Jack & Ann Degrandchamp	7722 Aboite Center Road	Fort Wayne	IN	46804
Christopher & Angela Harouff	7730 Aboite Center Road	Fort Wayne	IN	46804
Daniel & Lynn Knee	7820 Aboite Center Road	Fort Wayne	IN	46804
Southwest Allen High School Corp c/o City Sec	116 E Berry Street Suite 1000	Fort Wayne	IN	46802
YMCA	1020 Barr Street	Fort Wayne	IN	46802
Alford & Renee Moore	4204 Live Oak Boulevard	Fort Wayne	IN	46804
Roy & Linda Johnson	4209 Live Oak Boulevard	Fort Wayne	IN	46804
Verizon North Tax Department	PO Box 152206	Irving	TX	75015
Frederick & Ann Warner	15309 Longview Cove	Fort Wayne	IN	46804
Mathew & Angela Doehrman	9931 Aboite Center Road	Fort Wayne	IN	46804
Big Yellow House LLC	16 Nizhoni Court	Sandia Park	NM	87047
Eugene Hoffman	4220 Aboite Lake Drive	Fort Wayne	IN	46804
Alexander Florence	4211 Aboite Lake Drive	Fort Wayne	IN	46804
Scott & Michelle Gray	9820 Trevina Court	Fort Wayne	IN	46804
David Swartz	9810 Trevina Court	Fort Wayne	IN	46804
Ricky & Laura Rohr	2454 E 800 S	Columbia City	IN	46725
Marshall Butler	9634 Wolf River Place	Fort Wayne	IN	46804
Keith & Susan Hood	9624 Wolf River Place	Fort Wayne	IN	46804
David & Marianne Raatz	9614 Wolf River Place	Fort Wayne	IN	46804
Douglas & Denise DeFay	9604 Wolf River Place	Fort Wayne	IN	46804
Michael Combs & Lorna McMillan	9530 Wolf River Place	Fort Wayne	IN	46804
Derrick & Amelia Robertson	9522 Wolf River Place	Fort Wayne	IN	46804
Jane Hicks	9512 Wolf River Place	Fort Wayne	IN	46804
Jeffrey & Kathryn Baehl	9506 Wolf River Place	Fort Wayne	IN	46804
Kelly Fairchild	4212 Holly Tree Place	Fort Wayne	IN	46804
Michael Hey	1414 Chestnut Street	Auburn	IN	46706
Nathan Moore	4209 Holly Tree	Fort Wayne	IN	46804
Park Avenue LLC	921 Dupont Road Suite 882	Fort Wayne	IN	46825

POTENTIALLY AFFECTED PARTIES
AQUA INDIANA, INC.
ABOITE DIVERSION FORCE MAIN

NAME	ADDRESS	CITY	STATE	ZIP
Peach United Church of Christ	9123 Aboite Center Road	Fort Wayne	IN	46804
Haverhill Community Association	PO Box 11423	Fort Wayne	IN	46858
Karau Family Trust	6626 Quail Ridge Lane	Fort Wayne	IN	46804
Leamon & Joyce Williams	2131 West County Line Road S	Fort Wayne	IN	46804
David & Ann O'Briant	PO Box 613	Roanoke	IN	46783
Chun Wong	18 Emerald Lane	Norwich	CT	06360
Gary & Janet Baltzell	8833 Aboite Center Road	Fort Wayne	IN	46804
Larry & Patricia Holderbaum	8730 Voyager Drive	Fort Wayne	IN	46804
Dennis & Stephanie Huber	8722 Voyager Drive	Fort Wayne	IN	46804
Derek Mann	8712 Voyager Drive	Fort Wayne	IN	46804
John Barrett	8706 Voyager Drive	Fort Wayne	IN	46804
Jennifer Steward	8702 Voyager Drive	Fort Wayne	IN	46804
Phillip & Christina Kurut	8613 Aboite Center Road	Fort Wayne	IN	46804
Sec-Willows LLC	10703 J Street Suite 104	Omaha	NE	68154
IOM Health Systems	PO Box 8040	Fort Wayne	IN	46898
Daniel Wathen	7933 Aboite Center Road	Fort Wayne	IN	46804
David & Joretta Miller	9634 Saratoga Road	Fort Wayne	IN	46804
Paul & Dorothy Epple	7817 Aboite Center Road	Fort Wayne	IN	46804
John & Diann Cartwright	7807 Aboite Center Road	Fort Wayne	IN	46804
Robert & Lynette Stahl	7721 Aboite Center Road	Fort Wayne	IN	46804
Marysia Klus	7639 Aboite Center Road	Fort Wayne	IN	46804
Tom & Roxanna Carpenter	6711 Mohican Trail	Fort Wayne	IN	46804
John & Judith Schultheis	7625 Aboite Center Road	Fort Wayne	IN	46804
John & Pamela Bolyard	7619 Aboite Center Road	Fort Wayne	IN	46804
Daystar Development, Inc.	15016 Indian Creek Road	Fort Wayne	IN	46814
Federal National Mortgage Association	14221 Dallas Parkway Suite 1000	Dallas	TX	75254
Williams Properties	7513 W Jefferson Boulevard	Fort Wayne	IN	46804
Midwestern Office Park	7221 Engle Road	Fort Wayne	IN	46804
Allen County Farm Bureau	7217 Engle Road	Fort Wayne	IN	46804
Susan Ueber & Mark Freidrich	6210 Beaver Creek	Fort Wayne	IN	46814
Bussick Properties LLC	7207 Engle Road	Fort Wayne	IN	46804
TMRE LLC	7205 Engle Road	Fort Wayne	IN	46804
Sauer Land Surveying	14033 Illinois Road Suite C	Fort Wayne	IN	46814

POTENTIALLY AFFECTED PARTIES
AQUA INDIANA, INC.
ABOITE DIVERSION FORCE MAIN

NAME	ADDRESS	CITY	STATE	ZIP
HDS LLC	7201 Engle Road	Fort Wayne	IN	46804
Ash Realty Group LLC	7609 W Jefferson Boulevard	Fort Wayne	IN	46804
Steininger Real Estate	6914 Woodcroft Drive	Fort Wayne	IN	46804
Henry Sutorius & Laura McDevitt	8336 Aboite Center Road	Fort Wayne	IN	46804
Robert & Carol McDevitt	3912 Dicke Road	Fort Wayne	IN	46804
Walter Recht c/o Brad Recht	PO Box 468	Avilla	IN	46710
Jairia Dee Holtzinger	4135 Coventry Lane	Fort Wayne	IN	46804
AWS Foundation	8515 Bluffton Road	Fort Wayne	IN	46809
John Browning	4821 Lynnwood Street	Woodburn	IN	46797
New Hope Baptist Church	8832 Aboite Center Road	Fort Wayne	IN	46804
Randy & Mary Schmidt	4129 Winterfield Run	Fort Wayne	IN	46804
Kevin & Debra Smith	4126 Winterfield Run	Fort Wayne	IN	46804
C & A Retirement Communities	PO Box 13645	Fort Wayne	IN	46865
John & Norene Roth	9406 Aboite Center Road	Fort Wayne	IN	46804
Walter & Phyllis Zent	4127 E Saddle Drive	Fort Wayne	IN	46804
Daniel & Tami Sheridan	9512 Aboite Center Road	Fort Wayne	IN	46804
Barbara Peters	952 Aboite Center Road	Fort Wayne	IN	46804
Elbert Lindsey	8626 Summerset Place	Fort Wayne	IN	46825
Donald & Lisa Edwards	5436 Woodhurst Boulevard	Fort Wayne	IN	46807
Robert & Joann Fiedler	PO Box 40193	Fort Wayne	IN	46804
Jacqueline Mutchler & Don Krane	3013 Brier Brooklyn	Fort Wayne	IN	46804
Fred Orr	116 East Berry Street Suite 1535	Fort Wayne	IN	46802
Wayne Shellhouse	4123 Aboite Lake Drive	Fort Wayne	IN	46804
Ralph & Suellen Odell	4130 Aboite Lake Drive	Fort Wayne	IN	46804
Kerry French	9925 Rainer Pass	Fort Wayne	IN	46804
Arthur & Rita Heathcliff	9929 Rainer Pass	Fort Wayne	IN	46804
Aspen Village Community	PO Box 40108	Fort Wayne	IN	46804
Robert & Lee Hoppe	4121 Live Oak Boulevard	Fort Wayne	IN	46804
Chad Lee & Amy Dunham	4120 Live Oak Boulevard	Fort Wayne	IN	46804
Aboite Lutheran Church	10312 Aboite Center Road	Fort Wayne	IN	46804
Diocese of Fort Wayne South Bend	1103 S Calhoun	Fort Wayne	IN	46801
Dean & Sheila Elzey	2110 Braemer Drive	Fort Wayne	IN	46814
John & Karen Fisher	2122 Braemer Drive	Fort Wayne	IN	46814

POTENTIALLY AFFECTED PARTIES
AQUA INDIANA, INC.
ABOITE DIVERSION FORCE MAIN

NAME	ADDRESS	CITY	STATE	ZIP
Michael & Kathleen Gilkey	2202 Braemer Drive	Fort Wayne	IN	46814
William & Stacey Johnson	2208 Braemer Drive	Fort Wayne	IN	46814
David & Mary Cornwell	2214 Braemer Drive	Fort Wayne	IN	46814
J. Robert Ball II	12124 Blairmore Court	Fort Wayne	IN	46814
Scott & Molly Denning	12123 Blairmore Court	Fort Wayne	IN	46814
Dee Geoffrey Paddock	3744 S Washington Road	Fort Wayne	IN	46802
Mark & Lori Whitaker	12121 Sunningdale Court	Fort Wayne	IN	46814
Dwight & Lizabeth Jewett	2530 Braemer Drive	Fort Wayne	IN	46814
Robert & Lori Eddy	12204 Covington Road	Fort Wayne	IN	46814
Sycamore Hills Community Association	1511 Sycamore Hills Drive	Fort Wayne	IN	46814
Thomas & Negron Morales	12023 Sycamore Lakes Court	Fort Wayne	IN	46814
SMCM LLC	12015 Sycamore Lakes Court	Fort Wayne	IN	46814
Ronald Flickinger & Kare Undiv	12007 Sycamore Lakes Court	Fort Wayne	IN	46814
Sycamore Hills Golf Club LLC	11836 Covington Road	Fort Wayne	IN	46814

Shipment Request Form PBMS State of Indiana

Z900000276834

Agency IDEM

From:

Name: Charnell Carter
Department: OWQ
Phone: 317/233-0468

ECertified: True

EReturn Receipt: True

To:

Ship To 1: MR WILLIAM L. G. ETZLER
Ship To 2: UTILITY CENTER, INC. d/b/a AQUA INDIANA
Address: 1111 W Hamilton Rd S

Fort Wayne, IN 46814-9105

Country: US

Special Instructions:

Mailed 9/6/12
PA #20451

Reference:

Requested Date: 9/5/2012 9:07:58 AM

To print this form:

1) Click the Print button. (Print two copies, one to attach to your package and one to keep for your records.)

2) Place the form in a waybill pouch or attach it to your shipment so that the barcode portion of the page can be read and scanned.

3) If ECertified cover letter was selected , place letter contents along with eCertified cover letter in special certified enevelope so that Certified Bar code shows through window.

Print | Close

Form (1 of 1)

Carter, Charnell

From: DoNotReply@pb.com
Sent: Monday, September 10, 2012 11:46 PM
To: Carter, Charnell
Subject: Package Delivery Notification: Carrier = POST, TrackingNr = 9171900005271000232564

This delivery notification is to alert you that a package was delivered to:

MR WILLIAM L. G. ETZLER
Attn: UTILITY CENTER, INC. d/b/a AQUA IND
1111 W Hamilton Rd S

Fort Wayne , IN 468149105 US

The package was delivery on 9/10/2012 12:37:00 PM

Package Detail:

TrackingNr: 9171900005271000232564
Service: 2PM
Weight: 0.143
Pieces: 1
BillNr: Z900000276834

Your package can be tracked from URL:
http://trkcnfrm1.smi.usps.com/PTSInternetWeb/InterLabelInquiry.do?origTrackNum=9171900005271000232564

INDIANA DEPARTMENT OF ENVIRONMENTAL MANAGEMENT
We Protect Hoosiers and Our Environment.

Mitchell E. Daniels Jr.
Governor

Thomas W. Easterly
Commissioner

100 North Senate Avenue
Indianapolis, Indiana 46204
(317) 232-8603
Toll Free (800) 451-6027
www.idem.IN.gov

September 6, 2012

VIA CERTIFIED MAIL 91 7190 0005 2710 0023 2564

Mr. William L. G. Etzler,
Vice President and General Manager
Utility Center, Inc. d/b/a Aqua Indiana, Inc.
1111 West Hamilton Road South
Fort Wayne, Indiana 46814

Dear Mr. Etzler:

Re: 327 IAC 3 Construction Permit Application
Plans and Specifications for Braemar Pump Station & Force Main and Aboite Diversion Force Main
Permit Approval No. 20451
Fort Wayne, Indiana
Allen County

The application, plans and specifications, and supporting documents for the above-referenced project have been reviewed and processed in accordance with rules adopted under 327 IAC 3. Enclosed is the Construction Permit (Approval No. 20451), which applies to the construction of the above-referenced proposed sanitary sewer system to be located in Allen County. A new sanitary sewer lift station will be constructed along the west side of Braemar Drive approximately 2,800 feet north of its intersection with Covington Road. A new sanitary sewer force main will be constructed along the west side of Braemar Drive starting from the new lift station and ending along the north side of Covington Road approximately 900 feet west of its intersection with Eggeman Road. A second sanitary sewer force main will be constructed starting near the existing Sycamore Hills Sanitary Sewer Lift Station located along the north side of Covington Road approximately 900 feet west of its intersection with Eggeman Road and ending at the Utility Center, Inc, - Midwest Semipublic Wastewater Treatment Plant located at 6811 Engle Road.

Please review the enclosed permit carefully and become familiar with its terms and conditions. In addition, it is imperative that the applicant, consulting architect/engineer (A/E), inspector, and contractor are aware of these terms, conditions, and reporting and testing requirements.

It should be noted that any person affected or aggrieved by the agency's decision in authorizing the construction of the above-referenced facility may, within fifteen (15) days from date of mailing, appeal this permit by filing a request with the Office of Environmental Adjudication for an adjudicatory hearing in accordance with IC 4-21.5-3-7 and IC 13-15-6. The procedure for appeal is outlined in more detail in Part III of the attached construction permit.

Plans and specifications were prepared by DLZ Indiana, certified by Mr. Casey M. Erwin, P.E., and submitted for review on July 3, 2012 with additional information submitted on August 21, August 24 and August 28, 2012.

Any questions concerning this permit may be addressed to Mr. Mike Miles, P.E., of our staff, at 317/232-6548. Questions concerning appeal procedures should be addressed to the Office of Environmental Adjudication, at 317/232-8591.

Sincerely,

Dale T. Schnaith, Chief
Facility Construction and
Engineering Support Section
Office of Water Quality

Project No. SP-1413
Enclosures
cc: Allen County Health Department
Allen County Commissioner
DLZ Indiana

INDIANA DEPARTMENT OF ENVIRONMENTAL MANAGEMENT
AUTHORIZATION FOR CONSTRUCTION OF
SANITARY SEWER SYSTEM
UNDER 327 IAC 3

DECISION OF APPROVAL

Utility Center, Inc. d/b/a Aqua Indiana, Inc. in accordance with the provisions of IC 13-15 and 327 IAC 3 is hereby issued a permit to construct the sanitary sewer system to be located in Allen County. A new sanitary sewer lift station will be constructed along the west side of Braemar Drive approximately 2,800 feet north of its intersection with Covington Road. A new sanitary sewer force main will be constructed along the west side of Braemar Drive starting from the new lift station and ending along the north side of Covington Road approximately 900 feet west of its intersection with Eggeman Road. A second sanitary sewer force main will be constructed starting near the existing Sycamore Hills Sanitary Sewer Lift Station located along the north side of Covington Road approximately 900 feet west of its intersection with Eggeman Road and ending at the Utility Center, Inc, - Midwest Semipublic Wastewater Treatment Plant located at 6811 Engle Road. The permittee is required to comply with requirements set forth in Parts I, II and III hereof. The permit is effective pursuant to IC 4-21.5-3-4(d). If a petition for review and a petition for stay of effectiveness are filed pursuant to IC 13-15-6, an Environmental Law Judge may be appointed for an adjudicatory hearing. The force and effect of any contested permit provision may be stayed at that time.

NOTICE OF EXPIRATION DATE

This permit and the authorization to initiate construction of this sanitary sewer system shall expire at midnight October 1, 2013. In order to receive authorization to begin construction beyond the date of expiration, the permittee shall submit such information and forms as are required by the Indiana Department of Environmental Management at least sixty (60) days prior to the expiration date.

Signed this 6th day of September, 2012, for the Indiana Department of Environmental Management.

Dale T. Schnaith, Chief
Facility Construction and
Engineering Support Section
Office of Water Quality

SANITARY SEWER SYSTEM DESCRIPTION

The proposed project shall consist of approximately 29 feet of 21-inch diameter PVC ASTM F679 sanitary sewer and one (1) new sanitary sewer lift station located near the west side of Braemar Drive approximately 2,800 feet north of its intersection with Covington Road. The new Braemar Drive Lift Station shall consist of two (2) submersible pumps each with an expected capacity of 1,400 GPM at approximately 145 feet of total dynamic head (TDH). The expected combined capacity of two (2) pumps running together in parallel at the new lift station is 1,850 GPM at 174 feet of TDH. The existing average daily wastewater flow that will be diverted into the new 29-inch diameter sanitary sewer and into the new Braemar Drive Lift Station is approximately 396,000 GPD.

The proposed project shall also consist of:

- Approximately 3,346 feet of 12-inch diameter PVC (AWWA C900 DR-18) sanitary sewer force main to be installed by open cut.
- Approximately 620 feet of 12-inch diameter PVC ((AWWA C900 DR-18 (made with thermal butt fused joints)) sanitary sewer force main to be installed by horizontal directional drilling which is approved as an alternative to the State Technical Standards per the State Rule 327 IAC 3-6-32.
- Approximately 23,339 feet of 18-inch diameter PVC (AWWA C905 DR-21) sanitary sewer force main to be installed by open cut.
- Approximately 1,215 feet of 18-inch diameter PVC ((AWWA C905 DR-21 (made with fused joints)) sanitary sewer force main to be installed by horizontal directional drilling which is approved as alternative to the State Technical Standards per the State Rule 327 IAC 3-6-32.
- A Vortex Flow Structure to be connected to the terminal discharge end of the new 18-inch diameter force main. The Vortex Flow Structure will be located near the headworks of the Midwest Semipublic Wastewater Treatment Plant and it has a design flow range of 0.50 MGD to 4.0 MGD.

The new 12-inch diameter PVC sanitary sewer force main will extend south from the new lift station along the west side of Braemar Drive to the intersection with Covington Road and then extend east along the north side of Covington Road. The new

12-inch diameter force main will end near the existing Sycamore Hills Sanitary Sewer Lift Station that is located approximately 900 feet west of its intersection with Eggeman Road. The existing Sycamore Hills Lift Station does not have the capacity for the additional peak wastewater flow from the new Braemar Drive Lift Station. The new Braemar Drive Lift Station will be connected to the new 18-inch diameter PVC sanitary sewer force main along the north side of Covington Road next to the existing Sycamore Hills Lift Station.

The existing Sycamore Hills Lift Station will be re-connected to the new 18-inch diameter force main. The existing 8-inch diameter force main that is connected to the Sycamore Hills Lift Station will be plugged and abandoned in place upon project completion. The two (2) existing submersible pumps at the Sycamore Hill Lift Station will remain in service and will each have an expected capacity of 1,750 GPM at approximately 116 feet of TDH based on their connection to the new 18-inch diameter force main.

Simultaneous operation of both lift stations is possible and can include a maximum of two (2) pumps at the new Braemar Drive Lift Station and one (1) pump at the existing Sycamore Hills Lift Station. The expected combined capacity of two (2) pumps running together in parallel at the new Braemar Drive Lift Station is 1,500 GPM at 185 feet of TDH when there is one (1) pump in operation at the existing Sycamore Hills Lift Station. The expected capacity of the one (1) pump in operation at the existing Sycamore Hills Lift Station is 1,150 GPM at 136 feet of TDH when there are two (2) pumps in operation at the Braemar Drive Lift Station.

The new 18-inch diameter PVC sanitary sewer force main will begin near the existing Sycamore Hills Lift Station and extend east along the north side of Covington Road to the intersection with Eggeman Road, south along the existing right-of-way (ROW) of Eggeman Road to the intersection with the Aboite Center Road, east along the ROW of Aboite Center Road to the intersection with West Jefferson Boulevard, cross under West Jefferson Boulevard to Engle Road and then extend east along the ROW of Engle Road to the Midwest Semipublic Wastewater Treatment Plant. The new 18-inch diameter PVC force main will be installed by jack and bore under I-69 at the Aboite Center Road Overpass and encased in a 36-inch diameter steel casing.

Inspection during the construction and installation of the new sanitary sewer, sanitary sewer lift station and sanitary sewer force mains will be provided by Utility Center, Inc. d/b/a Aqua Indiana, Inc. Maintenance after completion of construction will be provided by Utility Center, Inc. d/b/a Aqua Indiana, Inc. Wastewater treatment will be provided by Utility Center, Inc. d/b/a Aqua Indiana, Inc. at the Midwest Semipublic Waste\water Treatment Plant located at 6811 Engle Road.

CONDITIONS AND LIMITATIONS TO THE AUTHORIZATION FOR CONSTRUCTION OF SANITARY SEWERS

During the period beginning on the effective date of this permit and extending until the expiration date, the permittee is authorized to construct the above described sanitary sewer system. Such construction shall conform to all provisions of State Rule 327 IAC 3 and the following specific provisions:

PART I

SPECIFIC CONDITIONS AND LIMITATIONS TO THE CONSTRUCTION PERMIT

Unless specific authorization is otherwise provided under the permit, the permittee shall comply with the following conditions:

1. All local permits shall be obtained before construction is begun on this project.

2. If pollution or nuisance conditions are created, immediate corrective action will be taken by the permittee.

3. The separation of sanitary sewers from water mains and drinking water wells must comply with 327 IAC 3-6-9.

4. All gravity sewer pipe must be leak tested using either a hydrostatic test or air test in accordance with 327 IAC 3-6-19(d). If using a hydrostatic test, the rate of exfiltration or infiltration shall not exceed 200 gallons per inch of pipe diameter per linear mile per day. Air test shall be as prescribed.

5. The results of the gravity sewer leakage test and/or force main leakage test on the completed sewer shall be submitted to this office within three months of completion of construction.

6. Deflection tests must be performed on all flexible* pipe after the final backfill has been in place at least 30 days. No pipe shall exceed a vertical deflection of 5%. Deflection test results shall be submitted with the infiltration/exfiltration test results. (*The following are considered nonflexible pipes: vitrified clay pipe, concrete pipe, ductile iron pipe, cast iron pipe, asbestos cement pipe.)

7. Manholes shall be air tested in accordance with ASTM C1244-93, Standard Test Method for Concrete Sewer Manholes by the Negative Air

Pressure (Vacuum) Test. The manhole test results shall be submitted with the gravity sewer leakage test results.

8. A drop pipe must be provided for all sewers entering a manhole at an elevation of 24 inches or more above the manhole invert.

9. An audio-visual alarm shall be installed for the proposed lift station.

10. Air relief valves shall be installed at high points in the force main.

11. All force mains must be pressure and leak tested in accordance with 327 IAC 3-6-19(e).

Failure to submit test results within the allotted time period or failure to meet guidelines as set forth in the above conditions could be subject to enforcement proceedings as provided by 327 IAC 3-5-3.

PART II

GENERAL CONDITIONS

1. No significant or material changes in the scope of the plans or construction of this project shall be made unless the following provisions are met:

   a. Request for permit modification is made 60 days in advance of the proposed significant or material changes in the scope of the plans or construction;

   b. Submit a detailed statement of such proposed changes;

   c. Submit revised plans and specifications including a revised design summary; and

   d. Obtain a revised construction permit from this agency.

2. This permit may be modified, suspended, or revoked for cause including, but not limited to the following:

   a. Violation of any term or conditions of this permit:

   b. Obtaining this permit by misrepresentation or failure to disclose fully all relevant facts.

3. Nothing herein shall be construed as guaranteeing that the proposed sanitary sewer system shall meet standards, limitations or requirements of this or any other agency of state or federal government, as this agency has no direct control over the actual construction and/or operation of the proposed project.

PART III

APPEALS PROCEDURE

Anyone wishing to challenge this agency's decision for authorizing the construction of this facility may do so, provided that a petition for administrative review is filed as required by IC 4-21.5-3-7. The petition must be submitted within fifteen (15) days of the date of mailing of this permit notification. The petition must include facts demonstrating that you are either the applicant, a person aggrieved or adversely affected by this decision, or otherwise entitled to review by law. Additionally, IC 13-15-6-2 requires that your petition include:

1. The name and address of the person making the request;

2. The interest of the person making the request;

3. Identification of any persons represented by the person making the request;

4. The reasons, with particularity, for the request;

5. The issues, with particularity, proposed for consideration at the hearing; and

6. Identification of the permit terms and conditions which, in the judgement of the person making the request, would be appropriate in the case in question to satisfy the requirements of the law governing permits of the type granted or denied by the Assistant Commissioner's action.

7. Pursuant to IC 4-21.5-3-1(f), any document serving as a petition for review or review and stay must be filed with the Office of Environmental Adjudication. Filing of such a document is complete on the earliest of the following dates:

   a. The date on which the petition is delivered to the Office of Environmental Adjudication, Indiana Government Center North, 100 North Senate Avenue, Room 501, Indianapolis, Indiana 46204;

   b. The date of the postmark on the envelope containing the petition, if the petition is mailed by United States mail; or

   c. The date on which the petition is deposited with a private carrier, as shown by a receipt issued by the carrier, if the petition is sent by private carrier.

IDEM

INDIANA DEPARTMENT OF ENVIRONMENTAL MANAGEMENT
We Protect Hoosiers and Our Environment.
100 N. Senate Avenue • Indianapolis, IN 46204
(800) 451-6027 • (317) 232-8603 • www.idem.IN.gov

Michael R. Pence
Governor

Thomas W. Easterly
Commissioner

May 14, 2014

VIA CERTIFIED MAIL 91 7190 0005 2710 0033 3469

Mr. William L. G. Etzler,
Vice President and General Manager
Utility Center, Inc. d/b/a Aqua Indiana, Inc.
1111 West Hamilton Road South
Fort Wayne, Indiana 46814

Dear Mr. Etzler:

Re: 327 IAC 3 Construction
Permit Application
Plans and Specifications for
Sanitary Sewer
Braemar Pump Station & Force Main
and Aboite Diversion Force Main
Permit Approval No. 20451
Fort Wayne, Indiana
Allen County

The above-referenced construction permit was issued September 6, 2012. The above-referenced construction permit approved the construction of a new sanitary sewer lift station located along Braemar Drive approximately 2,800 feet north of the intersection with Covington Road and a new 12-inch diameter PVC (AWWA C900 DR-18) sanitary sewer force main approximately 3,966 feet long. The above-referenced construction permit also approved the construction of a second 18-inch diameter PVC (AWWA C905 DR-21) sanitary sewer force main approximately 24,554 feet long. The new 18-inch diameter PVC force main replaced an existing 8-inch diameter force main that connected the existing Sycamore Hills Sanitary Sewer Lift Station to the Midwest Semipublic Wastewater Treatment Plant. The above-referenced construction permit stated that the existing 8-inch diameter force main would be plugged and abandoned after the proposed project was constructed.

On May 9, 2014, this Office received an E-mail notification from DLZ Indiana stating that there was a change in the approved project. The change involved keeping the existing 8-inch diameter force main in service instead of plugging and abandoning it. The existing 8-inch diameter force main needs to remain in service because it has several grinder pump stations connected to it. New electrical control equipment will be installed at the existing Sycamore Hills Lift Station to monitor the wastewater level in the wet well. The electrical control equipment will switch the connection from the existing 8-inch diameter force main to the new 18-inch diameter force main when the incoming wastewater reaches the lag pump level in the wet well.

The proposed project changes were reviewed and it has been determined that they do not constitute a significant change in the scope of the proposed project and have no impact on the overall design of the proposed project. Therefore, a revised construction permit is not required. The submitted information is considered to be adequate documentation of the proposed project changes. Utility Center, Inc. d/b/a Aqua Indiana, Inc., can proceed with construction under the terms of the original Construction Permit Approval No. 20451.

If you have any questions concerning your application, please contact Mr. Mike Miles, P.E., at 317/232-6548.

Sincerely,

Dale T. Schnaith, Chief
Facility Construction & Engineering
Support Section
Office of Water Quality

MM/mm
Project No. SP-1413

cc: Allen County Health Department
Allen County Commissioner
DLZ Indiana
Attention: Ms. Diana L. Toth, P. E.

DLZ
ARCHITECTURE • ENGINEERING • PLANNING
SURVEYING • CONSTRUCTION SERVICES

INNOVATIVE IDEAS
EXCEPTIONAL DESIGN
UNMATCHED CLIENT SERVICE

Mr. Dale Schnaith, Chief Facility Construction and Engineering Support Section
Office of Water Quality
Indiana Department of Environmental Management

Dear Mr. Schnaith:

RE: Aqua Indiana, Inc.
Braemar Pump Station & Force Main/Aboite Diversion Force Main
Construction Permit No. 20451 dated September 6, 2012
Proposed Amendment

On page 3 of the construction permits it states "The existing 8-inch diameter force main that is connected to the Sycamore Hills Lift Station will be plugged and abandoned in place upon project completion."

Aqua Indiana proposes that the 8-inch force main remain operational to receive flow from the Sycamore Hills Lift Station up to the average daily flow. Pump controls will be upgraded so that once the average daily flow is exceeded, the lift station will divert flow to the 18-inch force main.

Once the project is completed, all of the flow from the interceptor upstream of the Braemar Lift Station will be diverted to the 18-inch force main, instead of reaching the Sycamore Hill Lift Station.

This proposed amendment to the proposed project will resolve the following issues:

1. Currently there are 8-10 customers directly tied into the 8-inch force main along Eggeman Road, with individual grinder pump stations and small diameter force main. Leaving this 8-inch force main operational will maintain flushing in that pipe. The 8-inch force main discharges into a 10-inch gravity sewer which increases to 12-inch at next manhole. Maintaining flow in the 8-inch force main from Sycamore Hills LS will reduce low flow maintenance issues in that gravity line.

2. Aqua Indiana wants to reserve excess capacity at the Midwest WWTP for future flows.

Sincerely,

Diana L. Toth

Diana L. Toth, P.E.
Project Engineer

Cc: Derek Sutton, Aqua Indiana, Inc.
Mike Miles, IDEM

M:\Proj\1166\5135 - Aqua Indiana\Docs\Letters\2014-5-9 schnaith amend const permit 20451Aqua.docx

MILES, MIKE

From: Diana Toth [dltoth@dlz.com]
Sent: Friday, May 09, 2014 4:54 PM
To: MILES, MIKE
Subject: RE: Aqua IN Amend Constr Permit #20451

Mike,
Yes, the pump controls will read the wet well level, so that when the lag pump level is reached, signal will be sent to the valve actuators to open and close the valves on the 18-inch and 8-inch force mains, respectively.
Diana

From: MILES, MIKE [mailto:MMILES@idem.IN.gov]
Sent: Friday, May 09, 2014 3:50 PM
To: Diana Toth
Cc: SCHNAITH, DALE
Subject: RE: Aqua IN Amend Constr Permit #20451

Diana,

Based on my understanding, the existing Sycamore Hills Sanitary Sewer Lift Station is currently connected to the existing 8-inch diameter force main that was to be capped and abandoned but will now remain in operation at the request of Aqua Indiana.

The new and recently bid Braemar Lift Station will be connected to the new 18-inch diameter force main that was approved in the Construction Permit. The existing Sycamore Hills Lift Station will be connected to both the existing 8-inch diameter force main and the new 18-inch diameter force main after construction completion.

According to your letter, the Sycamore Hills Lift Station will switch connections from the 8-inch force main to the 18-inch force main once the "average daily flow" is exceeded. Question - Does the switch from the 8-inch force main to the 18-inch force main occur when one (1) lift station pump can't keep up with the peak incoming flow?

Mike Miles, P.E.
Project Engineer
IDEM OWQ Facility Construction Section
317 / 232-6548

From: Diana Toth [mailto:dltoth@dlz.com]
Sent: Friday, May 09, 2014 2:28 PM
To: SCHNAITH, DALE; MILES, MIKE
Subject: RE: Aqua IN Amend Constr Permit #20451

Construction has started and should be completed by September 2014 for the Aboite Diversion Force Main project. Braemar PS and Force Main project was just bid and will be under contract shortly, with completion by end of December 2014.

From: SCHNAITH, DALE [mailto:DSCHNAIT@idem.IN.gov]
Sent: Friday, May 09, 2014 2:21 PM
To: MILES, MIKE
Cc: Diana Toth
Subject: FW: Aqua IN Amend Constr Permit #20451

Mike,

Could you please review this and advise if you have any concerns or questions. Upon review and if determined acceptable, it appears that it may need a minor modification approval letter from us. Also, if construction has not already begun they may need a permit time extension.

Dale T. Schnaith, Chief
Facility Construction & Engineering
Support Section
Office of Water Quality
IDEM
317-232-8657
dschnait@idem.in.gov

From: Diana Toth [mailto:dltoth@dlz.com]
Sent: Friday, May 09, 2014 2:06 PM
To: SCHNAITH, DALE
Cc: MILES, MIKE; 'Sutton, Derek S.'; Casey Erwin
Subject: Aqua IN Amend Constr Permit #20451

Dale,
If you have any questions or concerns, please call or email.
Thanks,
Diana

Diana Toth | Civil Engineer

260-420-3114 x6610 (office)
dltoth@dlz.com | www.dlz.com

DLZ
ARCHITECTURE - ENGINEERING - PLANNING
SURVEYING - CONSTRUCTION SERVICES

INNOVATIVE IDEAS
EXCEPTIONAL DESIGN
UNMATCHED CLIENT SERVICE

Please consider the environment before printing this e-mail

IDEM

INDIANA DEPARTMENT OF ENVIRONMENTAL MANAGEMENT
We Protect Hoosiers and Our Environment.
100 N. Senate Avenue • Indianapolis, IN 46204
(800) 451-6027 • (317) 232-8603 • www.idem.IN.gov

Michael R. Pence
Governor

Thomas W. Easterly
Commissioner

May 14, 2014

VIA CERTIFIED MAIL 91 7190 0005 2710 0033 3469

Mr. William L. G. Etzler,
Vice President and General Manager
Utility Center, Inc. d/b/a Aqua Indiana, Inc.
1111 West Hamilton Road South
Fort Wayne, Indiana 46814

Dear Mr. Etzler:

Re: 327 IAC 3 Construction
Permit Application
Plans and Specifications for
Sanitary Sewer
Braemar Pump Station & Force Main
and Aboite Diversion Force Main
Permit Approval No. 20451
Fort Wayne, Indiana
Allen County

The above-referenced construction permit was issued September 6, 2012. The above-referenced construction permit approved the construction of a new sanitary sewer lift station located along Braemar Drive approximately 2,800 feet north of the intersection with Covington Road and a new 12-inch diameter PVC (AWWA C900 DR-18) sanitary sewer force main approximately 3,966 feet long. The above-referenced construction permit also approved the construction of a second 18-inch diameter PVC (AWWA C905 DR-21) sanitary sewer force main approximately 24,554 feet long. The new 18-inch diameter PVC force main replaced an existing 8-inch diameter force main that connected the existing Sycamore Hills Sanitary Sewer Lift Station to the Midwest Semipublic Wastewater Treatment Plant. The above-referenced construction permit stated that the existing 8-inch diameter force main would be plugged and abandoned after the proposed project was constructed.

On May 9, 2014, this Office received an E-mail notification from DLZ Indiana stating that there was a change in the approved project. The change involved keeping the existing 8-inch diameter force main in service instead of plugging and abandoning it. The existing 8-inch diameter force main needs to remain in service because it has several grinder pump stations connected to it. New electrical control equipment will be installed at the existing Sycamore Hills Lift Station to monitor the wastewater level in the wet well. The electrical control equipment will switch the connection from the existing 8-inch diameter force main to the new 18-inch diameter force main when the incoming wastewater reaches the lag pump level in the wet well.

The proposed project changes were reviewed and it has been determined that they do not constitute a significant change in the scope of the proposed project and have no impact on the overall design of the proposed project. Therefore, a revised construction permit is not required. The submitted information is considered to be adequate documentation of the proposed project changes. Utility Center, Inc. d/b/a Aqua Indiana, Inc., can proceed with construction under the terms of the original Construction Permit Approval No. 20451.

If you have any questions concerning your application, please contact Mr. Mike Miles, P.E., at 317/232-6548.

Sincerely,

Dale T. Schnaith, Chief
Facility Construction & Engineering
Support Section
Office of Water Quality

MM/mm
Project No. SP-1413

cc: Allen County Health Department
Allen County Commissioner
DLZ Indiana
Attention: Ms. Diana L. Toth, P. E.

DLZ
ARCHITECTURE • ENGINEERING • PLANNING
SURVEYING • CONSTRUCTION SERVICES

INNOVATIVE IDEAS
EXCEPTIONAL DESIGN
UNMATCHED CLIENT SERVICE

Mr. Dale Schnaith, Chief Facility Construction and Engineering Support Section
Office of Water Quality
Indiana Department of Environmental Management

Dear Mr. Schnaith:

RE: Aqua Indiana, Inc.
Braemar Pump Station & Force Main/Aboite Diversion Force Main
Construction Permit No. 20451 dated September 6, 2012
Proposed Amendment

On page 3 of the construction permits it states "The existing 8-inch diameter force main that is connected to the Sycamore Hills Lift Station will be plugged and abandoned in place upon project completion."

Aqua Indiana proposes that the 8-inch force main remain operational to receive flow from the Sycamore Hills Lift Station up to the average daily flow. Pump controls will be upgraded so that once the average daily flow is exceeded, the lift station will divert flow to the 18-inch force main.

Once the project is completed, all of the flow from the interceptor upstream of the Braemar Lift Station will be diverted to the 18-inch force main, instead of reaching the Sycamore Hill Lift Station.

This proposed amendment to the proposed project will resolve the following issues:

1. Currently there are 8-10 customers directly tied into the 8-inch force main along Eggeman Road, with individual grinder pump stations and small diameter force main. Leaving this 8-inch force main operational will maintain flushing in that pipe. The 8-inch force main discharges into a 10-inch gravity sewer which increases to 12-inch at next manhole. Maintaining flow in the 8-inch force main from Sycamore Hills LS will reduce low flow maintenance issues in that gravity line.

2. Aqua Indiana wants to reserve excess capacity at the Midwest WWTP for future flows.

Sincerely,

Diana L. Toth

Diana L. Toth, P.E.
Project Engineer

Cc: Derek Sutton, Aqua Indiana, Inc.
Mike Miles, IDEM

M:\Proj\1166\513S - Aqua Indiana\Docs\Letters\2014-5-9 schnaith amend const permit 20451Aqua.docx

MILES, MIKE

From: Diana Toth [dltoth@dlz.com]
Sent: Friday, May 09, 2014 4:54 PM
To: MILES, MIKE
Subject: RE: Aqua IN Amend Constr Permit #20451

Mike,
Yes, the pump controls will read the wet well level, so that when the lag pump level is reached, signal will be sent to the valve actuators to open and close the valves on the 18-inch and 8-inch force mains, respectively.
Diana

From: MILES, MIKE [mailto:MMILES@idem.IN.gov]
Sent: Friday, May 09, 2014 3:50 PM
To: Diana Toth
Cc: SCHNAITH, DALE
Subject: RE: Aqua IN Amend Constr Permit #20451

Diana,

Based on my understanding, the existing Sycamore Hills Sanitary Sewer Lift Station is currently connected to the existing 8-inch diameter force main that was to be capped and abandoned but will now remain in operation at the request of Aqua Indiana.

The new and recently bid Braemar Lift Station will be connected to the new 18-inch diameter force main that was approved in the Construction Permit. The existing Sycamore Hills Lift Station will be connected to both the existing 8-inch diameter force main and the new 18-inch diameter force main after construction completion.

According to your letter, the Sycamore Hills Lift Station will switch connections from the 8-inch force main to the 18-inch force main once the "average daily flow" is exceeded. Question - Does the switch from the 8-inch force main to the 18-inch force main occur when one (1) lift station pump can't keep up with the peak incoming flow?

Mike Miles, P.E.
Project Engineer
IDEM OWQ Facility Construction Section
317 / 232-6548

From: Diana Toth [mailto:dltoth@dlz.com]
Sent: Friday, May 09, 2014 2:28 PM
To: SCHNAITH, DALE; MILES, MIKE
Subject: RE: Aqua IN Amend Constr Permit #20451

Construction has started and should be completed by September 2014 for the Aboite Diversion Force Main project. Braemar PS and Force Main project was just bid and will be under contract shortly, with completion by end of December 2014.

From: SCHNAITH, DALE [mailto:DSCHNAIT@idem.IN.gov]
Sent: Friday, May 09, 2014 2:21 PM
To: MILES, MIKE
Cc: Diana Toth
Subject: FW: Aqua IN Amend Constr Permit #20451

Mike,

Could you please review this and advise if you have any concerns or questions. Upon review and if determined acceptable, it appears that it may need a minor modification approval letter from us. Also, if construction has not already begun they may need a permit time extension.

Dale T. Schnaith, Chief
Facility Construction & Engineering
Support Section
Office of Water Quality
IDEM
317-232-8657
dschnait@idem.in.gov

From: Diana Toth [mailto:dltoth@dlz.com]
Sent: Friday, May 09, 2014 2:06 PM
To: SCHNAITH, DALE
Cc: MILES, MIKE; 'Sutton, Derek S.'; Casey Erwin
Subject: Aqua IN Amend Constr Permit #20451

Dale,
If you have any questions or concerns, please call or email.
Thanks,
Diana

Diana Toth | Civil Engineer

260-420-3114 x6610 (office)
dltoth@dlz.com | www.dlz.com

DLZ
ARCHITECTURE - ENGINEERING - PLANNING
SURVEYING - CONSTRUCTION SERVICES

INNOVATIVE IDEAS
EXCEPTIONAL DESIGN
UNMATCHED CLIENT SERVICE

Please consider the environment before printing this e-mail

INDIANA DEPARTMENT OF ENVIRONMENTAL MANAGEMENT
We Protect Hoosiers and Our Environment.

Mitchell E. Daniels Jr.
Governor

Thomas W. Easterly
Commissioner

100 North Senate Avenue
Indianapolis, Indiana 46204
(317) 232-8603
Toll Free (800) 451-6027
www.idem.IN.gov

September 6, 2012

VIA CERTIFIED MAIL 91 7190 0005 2710 0023 2564

Mr. William L. G. Etzler,
Vice President and General Manager
Utility Center, Inc. d/b/a Aqua Indiana, Inc.
1111 West Hamilton Road South
Fort Wayne, Indiana 46814

Dear Mr. Etzler:

Re: 327 IAC 3 Construction
Permit Application
Plans and Specifications for
Braemar Pump Station & Force
Main and Aboite Diversion Force
Main
Permit Approval No. 20451
Fort Wayne, Indiana
Allen County

The application, plans and specifications, and supporting documents for the above-referenced project have been reviewed and processed in accordance with rules adopted under 327 IAC 3. Enclosed is the Construction Permit (Approval No. 20451), which applies to the construction of the above-referenced proposed sanitary sewer system to be located in Allen County. A new sanitary sewer lift station will be constructed along the west side of Braemar Drive approximately 2,800 feet north of its intersection with Covington Road. A new sanitary sewer force main will be constructed along the west side of Braemar Drive starting from the new lift station and ending along the north side of Covington Road approximately 900 feet west of its intersection with Eggeman Road. A second sanitary sewer force main will be constructed starting near the existing Sycamore Hills Sanitary Sewer Lift Station located along the north side of Covington Road approximately 900 feet west of its intersection with Eggeman Road and ending at the Utility Center, Inc, - Midwest Semipublic Wastewater Treatment Plant located at 6811 Engle Road.

Please review the enclosed permit carefully and become familiar with its terms and conditions. In addition, it is imperative that the applicant, consulting architect/engineer (A/E), inspector, and contractor are aware of these terms, conditions, and reporting and testing requirements.

It should be noted that any person affected or aggrieved by the agency's decision in authorizing the construction of the above-referenced facility may, within fifteen (15) days from date of mailing, appeal this permit by filing a request with the Office of Environmental Adjudication for an adjudicatory hearing in accordance with IC 4-21.5-3-7 and IC 13-15-6. The procedure for appeal is outlined in more detail in Part III of the attached construction permit.

Plans and specifications were prepared by DLZ Indiana, certified by Mr. Casey M. Erwin, P.E., and submitted for review on July 3, 2012 with additional information submitted on August 21, August 24 and August 28, 2012.

Any questions concerning this permit may be addressed to Mr. Mike Miles, P.E., of our staff, at 317/232-6548. Questions concerning appeal procedures should be addressed to the Office of Environmental Adjudication, at 317/232-8591.

Sincerely,

Dale T. Schnaith, Chief
Facility Construction and
Engineering Support Section
Office of Water Quality

Project No. SP-1413
Enclosures
cc: Allen County Health Department
Allen County Commissioner
DLZ Indiana

INDIANA DEPARTMENT OF ENVIRONMENTAL MANAGEMENT
AUTHORIZATION FOR CONSTRUCTION OF
SANITARY SEWER SYSTEM
UNDER 327 IAC 3

DECISION OF APPROVAL

Utility Center, Inc. d/b/a Aqua Indiana, Inc. in accordance with the provisions of IC 13-15 and 327 IAC 3 is hereby issued a permit to construct the sanitary sewer system to be located in Allen County. A new sanitary sewer lift station will be constructed along the west side of Braemar Drive approximately 2,800 feet north of its intersection with Covington Road. A new sanitary sewer force main will be constructed along the west side of Braemar Drive starting from the new lift station and ending along the north side of Covington Road approximately 900 feet west of its intersection with Eggeman Road. A second sanitary sewer force main will be constructed starting near the existing Sycamore Hills Sanitary Sewer Lift Station located along the north side of Covington Road approximately 900 feet west of its intersection with Eggeman Road and ending at the Utility Center, Inc, - Midwest Semipublic Wastewater Treatment Plant located at 6811 Engle Road. The permittee is required to comply with requirements set forth in Parts I, II and III hereof. The permit is effective pursuant to IC 4-21.5-3-4(d). If a petition for review and a petition for stay of effectiveness are filed pursuant to IC 13-15-6, an Environmental Law Judge may be appointed for an adjudicatory hearing. The force and effect of any contested permit provision may be stayed at that time.

NOTICE OF EXPIRATION DATE

This permit and the authorization to initiate construction of this sanitary sewer system shall expire at midnight October 1, 2013. In order to receive authorization to begin construction beyond the date of expiration, the permittee shall submit such information and forms as are required by the Indiana Department of Environmental Management at least sixty (60) days prior to the expiration date.

Signed this 6th day of September, 2012, for the Indiana Department of Environmental Management.

Dale T. Schnaith, Chief
Facility Construction and
Engineering Support Section
Office of Water Quality

SANITARY SEWER SYSTEM DESCRIPTION

The proposed project shall consist of approximately 29 feet of 21-inch diameter PVC ASTM F679 sanitary sewer and one (1) new sanitary sewer lift station located near the west side of Braemar Drive approximately 2,800 feet north of its intersection with Covington Road. The new Braemar Drive Lift Station shall consist of two (2) submersible pumps each with an expected capacity of 1,400 GPM at approximately 145 feet of total dynamic head (TDH). The expected combined capacity of two (2) pumps running together in parallel at the new lift station is 1,850 GPM at 174 feet of TDH. The existing average daily wastewater flow that will be diverted into the new 29-inch diameter sanitary sewer and into the new Braemar Drive Lift Station is approximately 396,000 GPD.

The proposed project shall also consist of:

- Approximately 3,346 feet of 12-inch diameter PVC (AWWA C900 DR-18) sanitary sewer force main to be installed by open cut.
- Approximately 620 feet of 12-inch diameter PVC ((AWWA C900 DR-18 (made with thermal butt fused joints)) sanitary sewer force main to be installed by horizontal directional drilling which is approved as an alternative to the State Technical Standards per the State Rule 327 IAC 3-6-32.
- Approximately 23,339 feet of 18-inch diameter PVC (AWWA C905 DR-21) sanitary sewer force main to be installed by open cut.
- Approximately 1,215 feet of 18-inch diameter PVC ((AWWA C905 DR-21 (made with fused joints)) sanitary sewer force main to be installed by horizontal directional drilling which is approved as alternative to the State Technical Standards per the State Rule 327 IAC 3-6-32.
- A Vortex Flow Structure to be connected to the terminal discharge end of the new 18-inch diameter force main. The Vortex Flow Structure will be located near the headworks of the Midwest Semipublic Wastewater Treatment Plant and it has a design flow range of 0.50 MGD to 4.0 MGD.

The new 12-inch diameter PVC sanitary sewer force main will extend south from the new lift station along the west side of Braemar Drive to the intersection with Covington Road and then extend east along the north side of Covington Road. The new

12-inch diameter force main will end near the existing Sycamore Hills Sanitary Sewer Lift Station that is located approximately 900 feet west of its intersection with Eggeman Road. The existing Sycamore Hills Lift Station does not have the capacity for the additional peak wastewater flow from the new Braemar Drive Lift Station. The new Braemar Drive Lift Station will be connected to the new 18-inch diameter PVC sanitary sewer force main along the north side of Covington Road next to the existing Sycamore Hills Lift Station.

The existing Sycamore Hills Lift Station will be re-connected to the new 18-inch diameter force main. The existing 8-inch diameter force main that is connected to the Sycamore Hills Lift Station will be plugged and abandoned in place upon project completion. The two (2) existing submersible pumps at the Sycamore Hill Lift Station will remain in service and will each have an expected capacity of 1,750 GPM at approximately 116 feet of TDH based on their connection to the new 18-inch diameter force main.

Simultaneous operation of both lift stations is possible and can include a maximum of two (2) pumps at the new Braemar Drive Lift Station and one (1) pump at the existing Sycamore Hills Lift Station. The expected combined capacity of two (2) pumps running together in parallel at the new Braemar Drive Lift Station is 1,500 GPM at 185 feet of TDH when there is one (1) pump in operation at the existing Sycamore Hills Lift Station. The expected capacity of the one (1) pump in operation at the existing Sycamore Hills Lift Station is 1,150 GPM at 136 feet of TDH when there are two (2) pumps in operation at the Braemar Drive Lift Station.

The new 18-inch diameter PVC sanitary sewer force main will begin near the existing Sycamore Hills Lift Station and extend east along the north side of Covington Road to the intersection with Eggeman Road, south along the existing right-of-way (ROW) of Eggeman Road to the intersection with the Aboite Center Road, east along the ROW of Aboite Center Road to the intersection with West Jefferson Boulevard, cross under West Jefferson Boulevard to Engle Road and then extend east along the ROW of Engle Road to the Midwest Semipublic Wastewater Treatment Plant. The new 18-inch diameter PVC force main will be installed by jack and bore under I-69 at the Aboite Center Road Overpass and encased in a 36-inch diameter steel casing.

Inspection during the construction and installation of the new sanitary sewer, sanitary sewer lift station and sanitary sewer force mains will be provided by Utility Center, Inc. d/b/a Aqua Indiana, Inc. Maintenance after completion of construction will be provided by Utility Center, Inc. d/b/a Aqua Indiana, Inc. Wastewater treatment will be provided by Utility Center, Inc. d/b/a Aqua Indiana, Inc. at the Midwest Semipublic Wastelwater Treatment Plant located at 6811 Engle Road.

CONDITIONS AND LIMITATIONS TO THE AUTHORIZATION FOR CONSTRUCTION OF SANITARY SEWERS

During the period beginning on the effective date of this permit and extending until the expiration date, the permittee is authorized to construct the above described sanitary sewer system. Such construction shall conform to all provisions of State Rule 327 IAC 3 and the following specific provisions:

PART I

SPECIFIC CONDITIONS AND LIMITATIONS TO THE CONSTRUCTION PERMIT

Unless specific authorization is otherwise provided under the permit, the permittee shall comply with the following conditions:

1. All local permits shall be obtained before construction is begun on this project.

2. If pollution or nuisance conditions are created, immediate corrective action will be taken by the permittee.

3. The separation of sanitary sewers from water mains and drinking water wells must comply with 327 IAC 3-6-9.

4. All gravity sewer pipe must be leak tested using either a hydrostatic test or air test in accordance with 327 IAC 3-6-19(d). If using a hydrostatic test, the rate of exfiltration or infiltration shall not exceed 200 gallons per inch of pipe diameter per linear mile per day. Air test shall be as prescribed.

5. The results of the gravity sewer leakage test and/or force main leakage test on the completed sewer shall be submitted to this office within three months of completion of construction.

6. Deflection tests must be performed on all flexible* pipe after the final backfill has been in place at least 30 days. No pipe shall exceed a vertical deflection of 5%. Deflection test results shall be submitted with the infiltration/exfiltration test results. (*The following are considered nonflexible pipes: vitrified clay pipe, concrete pipe, ductile iron pipe, cast iron pipe, asbestos cement pipe.)

7. Manholes shall be air tested in accordance with ASTM C1244-93, Standard Test Method for Concrete Sewer Manholes by the Negative Air

Pressure (Vacuum) Test. The manhole test results shall be submitted with the gravity sewer leakage test results.

8. A drop pipe must be provided for all sewers entering a manhole at an elevation of 24 inches or more above the manhole invert.

9. An audio-visual alarm shall be installed for the proposed lift station.

10. Air relief valves shall be installed at high points in the force main.

11. All force mains must be pressure and leak tested in accordance with 327 IAC 3-6-19(e).

Failure to submit test results within the allotted time period or failure to meet guidelines as set forth in the above conditions could be subject to enforcement proceedings as provided by 327 IAC 3-5-3.

PART II

GENERAL CONDITIONS

1. No significant or material changes in the scope of the plans or construction of this project shall be made unless the following provisions are met:

   a. Request for permit modification is made 60 days in advance of the proposed significant or material changes in the scope of the plans or construction;

   b. Submit a detailed statement of such proposed changes;

   c. Submit revised plans and specifications including a revised design summary; and

   d. Obtain a revised construction permit from this agency.

2. This permit may be modified, suspended, or revoked for cause including, but not limited to the following:

   a. Violation of any term or conditions of this permit:

   b. Obtaining this permit by misrepresentation or failure to disclose fully all relevant facts.

3. Nothing herein shall be construed as guaranteeing that the proposed sanitary sewer system shall meet standards, limitations or requirements of this or any other agency of state or federal government, as this agency has no direct control over the actual construction and/or operation of the proposed project.

PART III

APPEALS PROCEDURE

Anyone wishing to challenge this agency's decision for authorizing the construction of this facility may do so, provided that a petition for administrative review is filed as required by IC 4-21.5-3-7. The petition must be submitted within fifteen (15) days of the date of mailing of this permit notification. The petition must include facts demonstrating that you are either the applicant, a person aggrieved or adversely affected by this decision, or otherwise entitled to review by law. Additionally, IC 13-15-6-2 requires that your petition include:

1. The name and address of the person making the request;

2. The interest of the person making the request;

3. Identification of any persons represented by the person making the request;

4. The reasons, with particularity, for the request;

5. The issues, with particularity, proposed for consideration at the hearing; and

6. Identification of the permit terms and conditions which, in the judgement of the person making the request, would be appropriate in the case in question to satisfy the requirements of the law governing permits of the type granted or denied by the Assistant Commissioner's action.

7. Pursuant to IC 4-21.5-3-1(f), any document serving as a petition for review or review and stay must be filed with the Office of Environmental Adjudication. Filing of such a document is complete on the earliest of the following dates:

   a. The date on which the petition is delivered to the Office of Environmental Adjudication, Indiana Government Center North, 100 North Senate Avenue, Room 501, Indianapolis, Indiana 46204;

   b. The date of the postmark on the envelope containing the petition, if the petition is mailed by United States mail; or

   c. The date on which the petition is deposited with a private carrier, as shown by a receipt issued by the carrier, if the petition is sent by private carrier.