STATE OF INDIANA

INDIANA UTILITY REGULATORY COMMISSION

PETITION OF AQUA INDIANA, INC. PURSUANT TO IC 8-1-2-42.7 AND 170 IAC 1-5 FOR AUTHORITY TO INCREASE THE MONTHLY RECURRING RATES AND CHARGES CURRENTLY CHARGED AND COLLECTED BY ITS ABOITE WASTEWATER DIVISION FOR WASTEWATER UTILITY SERVICES PROVIDED IN PORTIONS OF ALLEN, HUNTINGTON AND WHITLEY COUNTIES; ESTABLISH A NON-RECURRING SYSTEM DEVELOPMENT CHARGE TO BE CHARGED AND COLLECTED BY THE ABOITE WASTEWATER DIVISION AND IMPLEMENT NEW RATE SCHEDULES REFLECTING THE RATES AND CHARGES APPROVED IN THIS CAUSE	)	**CAUSE NO. 44752**

TESTIMONY OF

JAMES T. PARKS – PUBLIC'S EXHIBIT NO. 3

ON BEHALF OF THE

INDIANA OFFICE OF UTILITY CONSUMER COUNSELOR

JUNE 24, 2016

Respectfully submitted,

Scott Franson, Atty. No. 27839-49
Deputy Consumer Counselor

Daniel M. Le Vay, Atty. No. 22184-49
Deputy Consumer Counselor

TESTIMONY OF OUCC WITNESS JAMES T. PARKS
CAUSE NO. 44752
AQUA INDIANA, INC. – ABOITE WASTEWATER DIVISION

I. INTRODUCTION

Q: Please state your name and business address.

A: My name is James T. Parks, P.E., and my business address is 115 West Washington Street, Suite 1500 South, Indianapolis, Indiana 46204.

Q: By whom are you employed and in what capacity?

A: I am employed by the Indiana Office of Utility Consumer Counselor ("OUCC") as a Utility Analyst II in the Water/Wastewater Division. My qualifications and experience are described in Appendix A.

Q: What relief does Aqua Indiana, Inc. seek in this Cause?

A: As part of its request to increase rates, Aqua Indiana, Inc. – Aboite Wastewater Division (hereafter "Aqua," "Utility" or "Petitioner") asks the Commission to include in rate base expenditures for construction and improvements to its wastewater utility properties in its Aboite Wastewater Division. Aqua estimates that by June 30, 2016 it has completed or will complete $27,800,000 in capital additions that were not included in its rate base in the final order issued in Aqua's last rate case (Cause No. 43874).

Q: Please describe the review and analysis you conducted to prepare your testimony.

A: I read Aqua's Petition and its case-in-chief including the testimony of Mr. Thomas M. Bruns and his attachments. I prepared discovery request questions and reviewed Petitioner's responses. On May 17, 2016, I visited Aqua's wastewater facilities and attended the Public Field Hearing at Summit Middle School. I reviewed 417 customer comments submitted to the OUCC. I reviewed the Water Pollution Treatment Contract between Aqua Indiana, Inc. and the City of Fort Wayne, Indiana. I visited the Indiana

Department of Environmental Management ("IDEM") website and reviewed documents pertaining to Aqua's Aboite Wastewater division facilities. Those documents included correspondence, inspection reports, sanitary sewer overflow notices, Agreed Orders B-1391, B-2454, and 2010-18952-W, 2006 Joint Stipulation for Stay and Agreed Entry, Compliance Plans, Additional Action Plan under Agreed Order 2010-18952-W, Construction Permits, and Monthly Reports of Operation ("MROs") for both the Main Aboite Wastewater Treatment Plant (hereafter sometimes "Main Aboite treatment plant" or "Aboite WWTP" or "Main Aboite") and the Midwest Wastewater Treatment Plant (hereafter sometimes "Midwest treatment plant" or "Midwest WWTP" or "Midwest"). I also reviewed various parties' testimony from Cause No. 43874 that involved capital projects and costs for Aqua's proposed projects. I reviewed testimony from Cause No. 44503 in which the Commission authorized Aqua to transfer water facilities to Fort Wayne City Utilities. I read the Commission's final orders from prior Utility Center, Inc. rate cases. Finally, I reviewed Planning Reports, Studies, Preliminary Engineering Reports and Master Plans for the Aboite Wastewater Division.

Q: What was included in the Planning Reports, Studies, Preliminary Engineering Reports and Master Plans you reviewed?

A: Those documents included the following:

1. *Master Plan for the Utility Center, Inc., Aboite Township Wastewater Collection and Treatment Facilities*, prepared by Triad Associates, Inc., October 30, 1998, revised December 30, 1998, revised March 30, 1999

2. *Consolidated Master Plan for the Utility Center Inc. Aboite Township Wastewater Collection and Treatment Facilities*, prepared by AquaSource, Inc. August 12, 1999

3. *Wastewater Master Plan for the Utility Center, Inc. Aboite Township Wastewater Collection and Treatment Facilities*, prepared by AquaUtility Construction, LP, November 16, 2001

4. *Wastewater Master Plan 2004-2006 for Utility Center, Inc.* prepared by Tetra Tech Inc., November 18, 2003.

5. *Ft. Wayne Sewer System (Aboite WWTP and Midwest WWTP), Hydraulic Sewer Analysis Report,* prepared by Albert A. Polidori Hydraulic Analysis, Aqua Pennsylvania, July 2009.

6. *Sycamore Hills Drainage Basin Study, Braemer Drive Lift Station & Force Main, Aboite Diversion Project,* prepared by DLR Consultants, LLC, September 2006, Revised May 2007.

7. *Pre-design Report for the Braemer Drive Lift Station and Force main,* prepared by DLZ Engineers, July 30, 2007.

8. *Evaluation of Midwest WWTP, Aqua Indiana, Inc.,* prepared by American Structurepoint, May 1, 2013.

9. *Mid-West Wastewater Treatment Facility Basis of Design Report,* prepared by URS Corporation, July 30, 2014.

10. *Master Plan Update, Aboite Division,* prepared by Greeley and Hansen Engineers, May 2016.

Q: What is the purpose of your testimony?

A: The purpose of my testimony is to describe the utility's characteristics, its operations and its current and prospective plant additions so the Commission may view Aqua's requests and the OUCC's recommendations in context. I also make various recommendations about improvements Aqua could make to its operations to improve or maintain quality service at reasonable cost. More specifically, I recommend Petitioner identify, develop, and evaluate feasible alternatives for its wastewater collection system using life cycle cost analyses. I note Petitioner's Master planning efforts and recommend Aqua continue to periodically update its Master Plan. I recommend Aqua update its collection system map and its gravity sewer and force main asset inventories to account for all of its collection system assets. I recommend Aqua continue efforts to identify which sub-basins in its collection system should be targeted for I&I reduction efforts including televising sewer lines, inspecting known and suspected problem sewers, and conducting a regular manhole inspection

program. I describe what Petitioner has done to eliminate sanitary sewer overflows and note where it has fallen short of IDEM's Action Plan compliance requirements. I recommend the Commission order Aqua to provide semi-annual written reports of its progress in completing the Additional Action Plan IDEM has imposed. I explain why Petitioner's Main Aboite Basin Improvements ("MABI") should not be considered a "major project" for special ratemaking treatment under the Commission's Minimum Standard Filing Requirements. I describe the Water Pollution Control Contract Aqua entered into with Fort Wayne as part of the agreement transferring Aqua Southwest to Fort Wayne and explain that the agreement required Aqua to expand its Midwest Wastewater Treatment Plant. I describe the Midwest Wastewater Treatment Plant Expansion and note that Fort Wayne will send higher concentrations of cBOD5 than Aqua's residential and commercial customers. I explain that without those higher concentrations from Fort Wayne, the design average capacity of the plant will be 5.2 MGD.

Q: Does your testimony include attachments?

A: Yes. I have appended a list of the attachments to this testimony as Appendix B.

II. ABOITE WASTEWATER DIVISION FACILITIES

Q: What is Aqua's service area?

A: Aqua provides sewage collection and treatment services to approximately 13,096 customers, the majority of which are located in Aboite Township in western Allen County, west of Interstate I-69. Aqua also serves limited customers in small portions of Wayne and Lafayette Townships in Allen County, and the eastern portion of Jefferson Township in Whitley County. Aqua's Certificate of Territorial Authority ("CTA") includes a small area in northeastern Jackson Township of Huntington County, but Aqua does not yet have

sewers or customers in this area. Aqua's wastewater collection system is minimal in Lake Township and Whitley County.

Q: How is Aqua's CTA divided for service by each wastewater treatment plant?

A: In response to OUCC DR 4.7, Aqua provided a map showing the CTA for the Aboite Division (faint red dashed line) and the collection system boundaries for the Main Aboite WWTP (solid blue line) and the Midwest WWTP (solid green line) (see Attachment JTP-1). In addition, Attachment JTP-2 shows a map of water and sewer districts in Allen County prepared using the interactive map tool from the City of Fort Wayne's Geographical Information System (GIS) Department. This map shows Aqua Indiana's Non-Exclusive CTA per Fort Wayne and Aqua Agreement shaded blue. This Non-Exclusive CTA has not been presented nor approved by the Commission.

Q: Please describe Aqua's wastewater operations and facilities.

A: Petitioner is a privately owned sewage disposal service provider operating two wastewater treatment plants, 34 lift stations, 197.5 miles of gravity sewers (1,043,034 lineal feet), and 26.3 miles of force mains (139,127 lineal feet). The Main Aboite Wastewater Treatment Plant serves 10,438 customers and the Midwest Wastewater Treatment Plant serves 2,861 customers as of December 31, 2015. (Petitioner's Response to OUCC DR 4.26). Both treatment plants mainly serve customers within the City of Fort Wayne. Both also treat waste from customers outside Fort Wayne's boundaries.

Q: Where are the two wastewater treatment plants located?

A: Both wastewater treatment plants are located on the southeast side of the service area. Both discharge to Graham McCulloch Ditch. The Midwest treatment plant is located approximately 2.25 miles northeast of the Main Aboite treatment plant and north of the Eagle Marsh Nature Preserve on the east side of Interstate I-69. The Main Aboite treatment

plant is adjacent to a residential neighborhood known as the Hamlets of Woodland Ridge on the west side of I-69.

Q: Please describe the Main Aboite Wastewater Treatment Plant.

A: The Main Aboite treatment plant is nominally rated for 2.25 million gallons per day ("MGD") but has a higher permitted 3.25 MGD design average flow capacity based on mass limits in its National Pollutant Discharge Elimination System ("NPDES") permit. The Main Aboite plant treated an average of 2.05 MGD in 2015. Treated flows in 2015 were lower than 2013 and 2014 following the Aboite Diversion completion in January 2015. The diversion project pumped an average of 0.217 MGD away from the Central Aboite collection system (northwest side) in 2015 directly to the Midwest treatment plant via 12-inch and 18-inch force mains. I describe the technical aspects of the Main Aboite Wastewater Treatment Plant in Attachment JTP-3.

Q: What is the current condition of the Main Aboite Wastewater Treatment Plant?

A: The Main Aboite plant is in good condition and is consistently producing a high quality effluent that complies with all NPDES limits. Aqua appears to have eliminated nearly all raw sewage bypass events occurring directly between the Main Aboite treatment plant and the receiving stream. This is in contrast to the high number of bypass events in the 1990s and early 2000s. However, a discovery response indicated one raw sewage bypass did occur at the Main Aboite plant in 2013 when receiving stream flooding impeded effluent discharge. (Aqua's Response to OUCC DR 4.16.)

Q: Please describe the Midwest Wastewater Treatment Plant.

A: The Midwest treatment plant is nominally rated for 1.7 MGD but currently has a much higher permitted 4.00 MGD design average flow capacity based on mass limits in its NPDES permit. The Midwest plant treated an average of 1.69 MGD in 2015. Treated

flows in 2015 were higher than 2013 and 2014 following the Aboite Diversion completion in January 2015. In 2015, the diversion project pumped an average of 0.217 MGD away from the collection system connected to the Main Aboite treatment plant directly to the Midwest treatment plant. I describe the technical aspects of the Midwest Wastewater Treatment Plant in Attachment JTP-4. The Midwest treatment plant is currently being expanded to 3.5 MGD to be able to treat 1.5 MGD of Fort Wayne wastewater. I discuss the Midwest expansion project in more detail below.

Q: What is the current condition of the Midwest Wastewater Treatment Plant?

A: The Midwest plant is in good condition considering it is currently being expanded. It is consistently producing a high quality effluent that complies with all NPDES permit limits. Aqua advised there have been no raw sewage bypasses from the Midwest treatment plant from 2009 to 2015. At the time of my onsite review (May 17, 2016), the Midwest treatment plant appeared to have *Nocardia* foaming on its new oxidation ditch. *Nocardia* is an unwanted organism that forms foaming layers of greasy brown bubbles on wastewater surfaces which is made worse by influent wastewater septicity (from long detention times in force mains) and by wastewaters containing large amounts of fats oils and grease.

Q: Please describe Aqua's gravity sewers in the wastewater collection system.

A: Aqua Indiana's collection system is comprised of 100% separate sanitary sewers by design. The NPDES permits prohibit raw sewage bypasses at the treatment plants and sanitary sewer overflows ("SSOs"). The Utility has not included any collection system and force main information on its Annual Reports to the Commission since 2004. (All entries are blank on page S-7.) In response to discovery, Aqua provided a comprehensive sewer system map, which shows the majority of the collection system assets (lift stations, gravity

sewers, and force mains) along with other area information. (Response to OUCC DR 4.8.) A comprehensive sewer system map is a useful tool for operating and maintaining a collection system. The Utility has done a good job with its mapping. However, the collection system map is not completely up to date since it does not show the Braemer Road Lift Station and the 3,996 LF 12-inch Braemer Road force main, which were constructed in 2014. It also does not show the 24,554 LF 18-inch diameter Aboite Diversion force main. Aqua should routinely update its collection system map.

Even though not reported on its Annual Reports, Aqua does maintain a list of its sewer assets and provided an inventory of gravity sewers by pipe material and pipe diameter. (Response to OUCC DR 4.4.) The collection system inventory, including gravity sewers and force mains, is provided in Attachment JTP-5. Through its discovery responses, Aqua indicated it has 1,043,034 lineal feet ("LF") of gravity sewers. But in its 2014 Annual Report, Aqua indicated it had 1,176,460 LF of collection system pipe and 4,562 manholes.[1] This is a discrepancy of 133,426 LF or nearly 13%.

Most sewer pipes (77%) are either the minimum 8-inch diameter allowed under *Ten States Standards* or smaller.[2] Most gravity sewers in Aqua's system (89%) are small diameter sewers of 12-inches or less. This system of small diameter sewers forms a sewage collection infrastructure that suffers from flow capacity limitations leading to sanitary sewer overflows.

[1] 2014 Annual Report for 2014, page 81.
[2] Section 33.1 Minimum Size "A public gravity sewer conveying raw wastewater shall not be less than 8 inches (200 mm) in diameter." *Recommended Standards for Wastewater Facilities* (Ten States Standards), 2014 Edition, by the Great Lakes – Upper Mississippi River Board of State and Provincial Public Health and Environmental Managers.

Aqua's sewers were installed at typical depths ranging from 8 to 12 feet. This may explain why groundwater infiltration appears to be non-excessive. Another factor controlling infiltration is that PVC is the predominant sewer main material making up 78% of Aqua's sewer mains. Due to longer layer lengths (less joints) than old clay tile sewers and tight joints, PVC is less susceptible to groundwater infiltration. The majority of the PVC sewers and manholes are contributed plant from developers.

Q: Please describe Aqua's lift stations.

A: Aqua has 34 lift stations, the majority of which serve individual subdivisions. Petitioner also has three larger or regional lift stations, which receive sewage from upstream lift stations and sewers. The regional lift stations include the following:

- Devil's Hollow Lift Station – discharges upstream of the Bittersweet Moors Lift Station and receives sewage from 4 other lift stations in the West Aboite sub basin.
- Bittersweet Moors Lift Station – discharges directly to the Main Aboite WWTP and receives sewage from 13 other lift stations in the West Aboite sub basin.
- Inverness Hills Lift Station – discharges upstream of the Midwest WWTP

The Midwest treatment plant is fed by 11 lift stations including the Sycamore Hills Lift station which only routes sewage to the Midwest treatment plant during wet weather (high flow) events. Under normal flow conditions, the Sycamore Hills Lift Station continues to route flows to the Main Aboite treatment plant. The Main Aboite treatment plant is fed by 24 lift stations. The lift station configuration is shown in Attachment JTP-6 along with a list of the lift stations and lift station information. The lift stations are listed using the Utility's original numbering system, which went up to 51 and included three lift stations in Aqua's north wastewater system. Also shown are the lift station numbers used in the 2016

Master Plan Update prepared by Greeley and Hansen. The Greeley and Hansen Master Plan contains detailed information on each lift station. (See Attachment JTP-7.)

Q: Why does Aqua have so many lift stations?

A: Developers installed lift stations by subdivisions indicating a lack of Master Planning in the early years of the Utility and the absence of larger diameter trunk line gravity sewers for developers to tie into. Many lift stations pump sewage to downstream gravity sewers flowing to a second, third, or even fourth lift station before being pumped again at the treatment plant.

Q: Has the Utility modified its lift stations and force mains?

A: Yes. In response to IDEM enforcement actions (Agreed Orders) the Utility has upsized lift stations, installed higher capacity pumps, and replaced small diameter force mains with both larger diameter and longer force mains to push more flow downstream around SSOs. In addition, the Utility has also upsized the raw sewage pumps at the treatment plants to pull in more flow and prevent back-ups in the influent sewers.

Q: Can you give some examples of lift stations that the Utility upgraded?

A: Yes. As an example of upsizing lift stations to address SSOs, the Utility completed a major lift station upgrade in 2002 at the Inverness Hills Lift Station. This lift station previously had two 300 gpm 5 Horsepower (HP) pumps installed in 1988 for a firm rated capacity of 300 gpm (largest pump out of service).[3] According to the 2016 Master Plan Update the Inverness Hills Lift Station currently has four 27 HP pumps (with space for a fifth pump) that were installed in 2002 when the pump station was enlarged. The firm rated capacity

[3] Page S-6 – 2001 IURC Annual Report for Utility Center, Inc.

is 2,350 gpm or almost eight times the size of the original lift station. The force main was also upsized from 6-inch diameter (abandoned) to the current 14-inch diameter.

Another example of upsizing a lift station to handle peak wet weather flows is the current Bittersweet Woods Lift Station project. IDEM issued Construction Permit 21533 on July 28, 2015. The original Lift Station had three 20 HP submersible pumps rated at 600 gpm each in 2001. The firm capacity is unknown but was less than 1,200 gpm. Discharge was to a 6-inch force main (since abandoned) that discharged to a gravity sewer upstream of the Main Aboite Wastewater Treatment Plant.

The Bittersweet Woods Lift Station was upgraded sometime in the 2000s by installing three larger capacity 40 HP pumps and constructing a 16-inch force main all the way to the Main Aboite Wastewater Treatment Plant. The 40 HP pumps had a firm capacity of 1,625 gpm. The current upgrade project replaces the existing 40 HP motors with new 75 HP motors and replaces the rotating assemblies with new larger impellers to increase the lift station's firm capacity 78% to 2,900 gpm.

Q: Please describe Aqua's force mains in the wastewater collection system.

A: According to its response to discovery (OUCC DR 4.5), Aqua has 123,378 lineal feet of force mains in active service in the Main Aboite Wastewater Treatment Plant service area and 15,749 LF of force mains in the Midwest Wastewater Treatment Plant service area. (It appears that Aqua has not listed all force mains connected to the Midwest treatment plant because the 3,966 LF 12-inch Braemer force main and the 24,554 LF Aboite Diversion Force Main constructed in 2014 are not on the inventory list.) Nearly one-third of its active force mains are the minimum 4-inch diameter size required by *Ten States Standards* or

less.[4] Aqua reports having 5.5 miles of below standard 1-1/2-inch, 2-inch and 3-inch diameter force mains. The predominant force main materials are high density polyethylene (HDPE) pipe (55.5%) and PVC (38%) which combined makes up 93.5% of all force mains in the collection system. The Utility does not have cast iron force mains and only 3,814 LF of ductile iron force mains (2.7%). Aqua has also abandoned a significant length of force mains caused by removing lift stations or upsizing lift stations and force mains to pump more sewage downstream around flow bottlenecks in the undersized collection infrastructure to prevent SSOs.

Q: Do you have any recommendations regarding Aqua's collection system?

A: Yes. I recommend that the Commission order Aqua to completely fill out the Annual Report by properly listing all of its gravity sewers and force mains on page S-7. The Utility should update this information and report it annually. The collection system report should follow the standard Commission format and list the diameter and type of gravity sewers and force mains, the lengths at the beginning and end of the year, and the lengths added and retired during the year.

I recommend the Commission order Aqua to fill out separate page S-7s for each of its wastewater divisions in Indiana (such as Aboite, South Haven, etc.).

I recommend Aqua update its collection system map and its gravity sewer and force main asset inventories to account for all of its collection system assets.

[4] Section 49.1 Force Mains – Velocity and Diameter "The minimum force main diameter for raw wastewater shall not be less than 4 inches (100 mm)." *Recommended Standards for Wastewater Facilities* (Ten States Standards), 2014 Edition, by the Great Lakes – Upper Mississippi River Board of State and Provincial Public Health and Environmental Managers.

III. MAJOR PROJECTS

Q: Is Aqua seeking to include major projects in its proposed rates and charges?

A: On page 10 of his testimony, Mr. Bruns states that "Aqua Indiana is seeking to reflect three (3) major projects in its proposed rates and charges, all of which are scheduled to be in service by June 30, 2016."

Q: Why is a "major project" an important designation?

A: Under the Commission's minimum standard filing requirements, projects that qualify as "major projects" under the rules are afforded special regulatory treatment. Pursuant to 170 IAC 1-5-5(5), major projects specifically identified in the petition may be included in rate base even if they were placed in service beyond the general rate base cut-off (i.e. end of test year) provided the electing utility declares them to be used and useful ten business days before the final hearing.

Q: What are Petitioner's proposed major projects?

A: Petitioner has identified three "major projects." These are (1) the Midwest Wastewater Treatment Plant Expansion; (2) the Aboite Wastewater Division Office and Field Services Building; and (3) the Main Aboite Basin Improvement ("MABI"). Mr. Bruns included detailed descriptions of the proposed major projects in Attachment B to his testimony.

Q: Aqua files its case under the Commission's Minimum Standard Filing Requirements. How do those rules define a major project?

A: In the definitions section of 170 IAC 1-5-1, the term "Major project" is defined as "a project that is estimated to cost more than one percent (1%) of a utility's proposed rate base under section 9(a)(1) of this rule."

Q: What is Petitioner's proposed rate base?

A: Petitioner's Schedule B-1, indicates a proposed rate base of $47,665,924. Therefore, in

this case a project can only be a major project under the Commission's rules if its cost exceeds $476,659, which is 1% of Petitioner's proposed rate base.

Q: What is the total estimated cost of the projects identified as the MABI?

A: Petitioner has estimated the total cost to be $1,257,750.

Q: What projects are included in the MABI?

A: The MABI Project Narrative Statement included in Mr. Bruns Attachment B states the following, which shows that the components of the MABI is really a list of smaller projects:

> The Main Aboite Basin Improvement (MABI) strictly addresses the assets within the Main Aboite Basin. The MABI project is one major capital project that has ten (10) engineer identified work items. These ten (10) work items are identified under the MABI as:
>
> - Cured in Place Pipe (CIPP)
> - Manhole Grouting and Lining
> - New lift station pumps and motors
> - New Variable Frequency Drives (VFDs)
> - New transducer level system
> - Redundant floats correction
> - New pump controller
> - Emergency bypass connections
> - New check valves
> - Improved monitoring systems
>
> The purpose of the MABI is to encompass various identified areas of improvement that are needed to address the various issues within the system. Such as:
>
> - Sanitary Sewer Overflow (SSO) violations
> - Inflow & Infiltration (I&I) within the interceptor piping and manholes
> - Deterioration within the interceptor lines and manholes
> - Structural safety of manholes
> - I&I, abandoned lines, and illegal connections going into the Main Aboite WWTP
> - Capacity issues for current and future growth in Aboite Township
> - Lifecycle expectancy on lift station equipment and material deterioration

Q: Do you agree that Petitioner's MABI qualifies as a major project?

A: No. The MABI Project Narrative Statement identifies ten separate projects that Petitioner

has labeled as a single "major project." Petitioner's MABI is not a single "major project" but is in fact ten separate projects, most of which are not by themselves sufficient to qualify for a major project under the Commission's rules. I question whether Petitioner can combine ten separate projects into one "major project" in order to include it in rate base pursuant to the Minimum Standard Filing Requirements, 170 IAC 1-5.

Q: Why do you not consider the components listed to be one major project?

A: The MABI projects are generally independent of one another and address different issues throughout the collection system. The projects are also being completed at many different locations throughout the collection system and placed in service on different dates.

Q: Do the Commission's rules provide any guidance about whether a utility can combine multiple projects into one "major project"?

A: Yes. The Commission's rules, specifically 170 IAC 1-5-5(5), describes the cutoff date for major projects and the qualifying criteria. Subsection 170 IAC 1-5-5(5)(A) requires a major project be specifically identified. The applicable language is based on the premise that the major project is one project with a single scope and location, not a series of loosely related projects:

> The major project is specifically identified in the utility's petition for a general rate change and should include a complete description of <u>the project</u>. A complete description of the project includes, among other things, the scope and <u>location of the project</u>. (emphasis added)

Petitioner has merely presented the Commission with a $1,257,750 "to do" list. An expensive "to do" list does not a major project make. Moreover, if the list of projects that make up the MABI may be considered together as one major project, this would effectively nullify any provision for general rate base cut-off. If the foregoing items listed as the MABI can count as a major project, it is difficult to conceive of any series or list of small

capital improvements that could not be grouped together under one designation simply to qualify for the special ratemaking treatment afforded to major projects. It is important also to remember that a small number of large discreet projects affords the OUCC and other parties an opportunity to verify the major projects have been completed and are in service. Under the rule, this occurs no less than ten days in advance of the final hearing but after the OUCC has filed its case. Requiring the consumer parties to monitor and verify a large number of small projects is neither tenable nor fair.

Q: Are you recommending that Petitioner's MABI not be considered a major project?

A: Yes. I recommend the Commission find Petitioner's MABI is not a major project and it not include the total $1,257,750 in rate base.

Q: Would any of the individual MABI projects qualify as a major project?

A: Yes. Petitioner provided the OUCC with copies of bids and cost estimates from several companies for the ten MABI projects including the Cured in Place Pipe ("CIPP") project. Petitioner provided a $664,171 bid from Insituform Technologies USA, LLC, which was chosen to complete the CIPP project and $86,116.60 in four work change directives and field directives. (See Attachment JTP-8.) The CIPP project's total cost is $750,287.60. Since the project cost is above the 1% major project threshold, I recommend the CIPP project be considered a major project and the $750,287.60 cost of the CIPP project be included in rate base provided it has been declared used and useful before the final hearing.

IV. SANITARY SEWER OVERFLOWS

Q: Does Aqua experience sanitary sewer overflows?

A: Yes. Sanitary sewer overflows ("SSOs") have been an ongoing problem for this system for over 25 years. IDEM has brought three enforcement actions against the Utility since

1992. IDEM and the Utility entered into the latest Agreed Order, 2010-18952-W, in 2010 to address sanitary sewer overflows. This Agreed Order has not been closed out. IDEM required Aqua to develop and complete a Compliance Plan to eliminate SSO's. However, Aqua still experiences SSOs in its collection system. In Section 6 of the Agreed Order, Aqua agreed to prepare an Additional Action Plan for SSO elimination, which it submitted to IDEM on March 29, 2016. Attachment JTP-9 includes Agreed Order 2010-18952-W, Aqua's Compliance Plan, and Aqua's Additional Action Plan.

Q: How many SSOs has Aqua experienced in its collection system?

A: Since 2009, Aqua has reported 139 SSOs to IDEM. Attachment JTP-10 includes information on these SSOs and Incident Reports submitted to IDEM in 2015 and 2016.

Table 2 – Sanitary Sewer Overflows

Aqua Indiana, Inc. – Aboite Wastewater Division

Year	Annual Precipitation at Ft. Wayne International Airport (inches/year)	Number of Reported Sanitary Sewer Overflows
2007	40.25	27
2008	38.99	29
2009	41.12	20
2010	33.15	8
2011	49.54	14
2012	28.58	6
2013	42.21	43
2014	42.84	27 / 49(2)
2015	46.39	17
2016 (1)	14.19	4
Total SSOs from 2009 to 2016		139

(1) Precipitation reported through May 31, 2016 and SSOs through May 10, 2016
(2) Utility reported 49 SSOs for 2014 on page 81 of its Annual Report.

Q: Where do the sewage overflows occur?

A: According to my review of discovery responses, nearly all of the overflows occurred at manholes or lift stations in the Main Aboite collection system. (OUCC DR 4-22.) Only three of the 139 reported SSOs occurred in the Midwest Wastewater Treatment Plant collection system. The Midwest system SSOs were caused by a sewer blockage in 2010, sewer damage by a contractor in 2012, and a large rain event in 2013.

Within the Main Aboite collection system, the main SSO area was previously near the Sycamore Hills Lift Station along Covington Road. Aqua reported 63 of the 139 SSOs (45%) occurred here. An SSO was last reported in the Sycamore Hills area on September 10, 2014. In late 2014, Aqua constructed the Aboite Diversion Force Main to pump sewage at higher flow rates to the Midwest Wastewater Treatment Plant. In January 2015, the Braemer Road Lift Station and Braemer Force Main were completed and put in service to relieve the Sycamore Hills Lift Station by routing sewage around it and pumping it directly to the Midwest plant. Since these improvements, Aqua has not experienced SSO's in the Sycamore Hills Lift Station area. But these improvements were brought on-line only recently. I am cautiously optimistic Aqua has successfully eliminated SSOs in the Sycamore Hills Lift Station area.

Q: Are SSOs still happening and where do they occur?

A: Yes. SSOs still happen in the Main Aboite collection system. The remaining SSOs are primarily from several overflowing manholes in the Liberty Hills subdivision (MH D33-2 and MH D33-3) and in the Coves of Westlake subdivision (MH D31-120). Aqua's President Thomas M. Bruns noted that there was a manhole located near a lake (retention

pond) that overflows when there is 1-inch or more of rainfall.[5] There have also been isolated overflows from other manholes and from lift stations during power failures.

Q: What does Aqua report as the causes of the SSOs?

A: Aqua lists the principle cause of the SSOs as rain events. However, this description is incomplete. It more accurately reflects only when the SSOs occur not the cause of the SSO or the source of the excessive clear water flows in the sewers. Rainwater entry into the sewers is known as inflow and is distinguished from infiltration. Aqua's flow pattern during wet weather appears to be a rapid flow increase during the rain event followed by a relatively quick return to normal flows once the rain ends. In other words, high flows quickly occur and quickly end. This pattern may indicate there are illegal connections to the sewer system such as basement sump pumps, foundation drains, roof drains and area drains. It could be also caused by drainage entering low-lying manholes or damaged sewers along creeks, drainage swales and retention ponds.

Q: What has Aqua done to eliminate SSOs?

A: It appears Aqua has historically pursued capital projects to increase pump capacities both in the collection system and at the wastewater treatment plants. The approach seeks to both push more flow around SSO problem areas and pull more flow into the wastewater treatment plants. Aqua has also been reportedly televising sewers, slip-lining sewers, repairing manhole defects, lining manholes, and raising manholes to help minimize SSOs.

[5] Discussion from a January 26, 2016 meeting in Indianapolis between Aqua Indiana personnel and OUCC staff.

Q: Do you have any recommendations regarding Sanitary Sewer Overflow elimination in Aqua's wastewater collection system?

A: Yes. Aqua currently continues under IDEM enforcement for its SSOs through Agreed Order 2010-18952-W. Since the Compliance Plan Aqua developed and implemented has not eliminated all SSOs, Aqua must complete the Additional Action Plan and then pass a demonstration period. I recommend that the Commission order Aqua to provide semi-annual written update reports detailing its progress in completing the Additional Action Plan, documenting information on any SSO that occurs in its system, and any new enforcement actions brought by IDEM, until Agreed Order 2010-18952-W or its successor Agreed Orders are closed.

V. INFILTRATION AND INFLOW (I&I)

Q: What is infiltration and inflow?

A: Infiltration and inflow or I&I is clear water (either rainwater or groundwater) that enters the collection system and flows along with sewage to the treatment plant. Clear water does not require treatment, but consumes capacity in the sewers and treatment plants. Inflow enters the collection system through illegal sump pump connections, downspout connections, area drains, foundation drains, and entry of ponded water through missing or defective manhole lids. Inflow sources cause spikes in peak flows within the entire wastewater system.

Groundwater infiltration occurs when clear water enters the sewer system through pipe cracks, defective pipes, defective manholes, and leaking sewer pipe joints. Infiltration occurs continuously day and night adding to base flow. Infiltration volume increases with high groundwater levels because higher hydraulic pressures force even more clear water

into the sewers. According to the United States Environmental Protection Agency ("US EPA") Guide for Estimating Infiltration and Inflow (June 2014),

> infiltration and inflow may be considered excessive when it is the cause of overflows or bypasses, or the cost to transport and treat exceeds the cost to eliminate it.

In addition, the US EPA guidance indicates that if the average treatment plant flow measured over a 7 to 14 day dry period (no rain) when groundwater levels are high exceeds 120 gallons per day per person ("gpdpp"), then excessive I&I is occurring. EPA published this I&I guidance document in 1985 when 3.5 gallons per flush toilets were standard in the U.S. A US EPA Outreach brochure – "Guide for Estimating Infiltration and Inflow" is provided in Attachment JTP-11. Since then, the Energy Policy Act of 1992 required that toilets installed in new construction be low flow (1.6 gallons per flush).

Q: Why are you discussing infiltration and inflow?

A: The purpose of this discussion is two-fold. First, well-run utilities address I&I to prevent prohibited SSOs in the collection system and raw sewage bypasses at the treatment plants and to avoid various costs such as additional power costs to pump extra flows and capital projects to increase capacity. The existence of excessive I&I calls into question Petitioner's collection system asset management practices. Second, the level of inflow in Aqua's collection system has affected the size and cost of its lift stations and force mains.

Q: Does Petitioner's collection system have excessive infiltration?

A: No. Based on my analysis of daily treatment plant effluent flow data and comparing it to the EPA's 120 gpdpp screening criteria, Aqua's Aboite Wastewater Division does not have excessive infiltration. For my analysis, I relied on effluent flow data reported to IDEM by

Aqua on its monthly discharge monitoring reports from 2013 to 2015 and my estimate of Aqua's connected population that ranged between 31,000 and 32,000 people.

Q: Why did you estimate the connected population instead of relying on the connected population provided by Aqua?

A: Aqua estimated its connected population based on its customer count, but Aqua does not have an actual population count. At the OUCC's request, Aqua provided customer numbers by user class (residential, commercial, multi-family, public) for 2012 to 2015 and estimated the connected population based on three people per customer. (Aqua's response to OUCC DR 4.26 and a summary of customer counts are provided in Attachment JTP-12.) Aqua's assumptions yields nearly 40,000 people connected to the Aboite Wastewater Division, which is significantly above my estimate. Because the customer numbers included commercial and public authority users and because Aqua assumed three people per customer, which is greater than 2010 U.S. Census data of 2.48 people per housing unit in Aboite Township, I prepared and used my own connected population estimates.

Q: How did you calculate Aqua's infiltration?

A: I calculated the average daily flow per person for 2014 to 2015 and compared it to the EPA's 120 gpdpp screening criteria. I determined the average daily flow rates for periods of 7 to 14 days during the spring high groundwater period excluding March due to snowmelt. There were very few acceptable periods with no rain for 7 to 14 days. The highest flow per person that I calculated was 106 gpdpp for the April 26th to May 3rd, 2015 period. The I&I flow data and calculations are shown in Attachment JTP-13.

Q: How did you determine the population to use in the excessive I&I screening calculation?

A: I estimated the population currently connected to Aqua's wastewater system by calculating the average pollutant pounds per day received at the treatment plants for 2013 to 2015. I

then determined the population equivalent for the pollutants based on established loading ratios under the *Ten States Standards* of 0.17 lbs./day of biochemical oxygen demand (BOD_5) per person and 0.2 lbs./day of total suspended solids (TSS) per person.[6] The connected population calculation is summarized in Table 3.

Table 3 – Connected Population Calculation

Year	Avg. Flow (MGD)	$cBOD_5$ (mg/l)	$cBOD_5$ (lbs./day)	TSS (mg/l)	TSS (lbs./day)
2013	4.11	179	6,146	203	6,959
2014	3.75	174	5,432	196	6,130
2015	3.74	144	4,504	174	5,418
Average	3.87	166	5,360	191	6,169
Population Equivalent			31,532		30,845
Averaged Population Equivalent			31,189		

Q: What do you conclude about infiltration in Aqua's collection system?

A: Aqua's infiltration appears to be under control in the collection system based on the screening criteria and reported flow data. Nevertheless, Aqua should continue to look for and remove infiltration as an ongoing part of its sewer maintenance activities.

Q: Turning to the Inflow component of the Infiltration and Inflow, does Petitioner's collection system have excessive Inflow?

A: Yes. The inflow is excessive by definition since it results in sanitary sewer overflows. Based on my analysis of daily treatment plant effluent flow data, Aqua does have excessive inflow as measured by the peak daily flow divided by the connected population. For my analysis, I relied on treatment plant effluent flow data reported by Aqua on its monthly

[6] 11.253 a. Design of Organic Capacity of Wastewater Treatment Facilities to Serve New Collection Systems *Recommended Standards for Wastewater Facilities* (Ten States Standards), 2014 Edition, by the Great Lakes – Upper Mississippi River Board of State and Provincial Public Health and Environmental Managers.

discharge monitoring reports submitted to IDEM from 2013 to 2015 and my estimate of Aqua's connected population that ranged between 31,000 and 32,000 people.

Q: What was the peak inflow you calculated?

A: I calculated the peak inflow for Aqua's Aboite Wastewater Division at 482 gallons per capita per day on April 18, 2013. From 2013 to 2015, Aqua exceeded the EPA's 275 gpcd peak flow screening criteria 18 times. The actual peak flows would be higher if influent flow data was used instead of effluent flows. In addition, during these peak wet weather events, SSOs also occurred. The flows lost through the SSOs are not measured and were not included as part of my flow calculations.

Q: Has IDEM notified Aqua about the continuing sanitary sewer overflows?

A: Yes. In several NPDES Wastewater Facility Inspection Reports, IDEM indicated Petitioner has continuing SSOs in the collection system. On September 14, 2015, IDEM inspected the Main Aboite Wastewater Treatment Plant. In the "Detailed Area Evaluations" section of this inspection report, IDEM states the following:

> The CSO/SSO evaluation generated an unsatisfactory rating. Part II. B. 2 of the permit states, in part, that pursuant to 327 IAC 5-2-8(11) overflows are prohibited. A records review indicates that sixteen sanitary overflows have occurred during 2015.

Wastewater inspection reports and correspondence are shown in Attachment JTP-14. Since Aqua continues enforcement under the 2010 Agreed Order with IDEM, IDEM's inspection section forwarded the SSO violation findings to IDEM's Enforcement Section.

Q: What type of homes are more likely to have illegal connections to Aqua's sanitary sewer system?

A: Likely candidates include homes with basements, homes with downspouts connected to the foundation drain, and those homes in low-lying poorly draining areas subject to flooding or standing water after rain events.

Q: Does Aqua currently inform and educate its residential customers that connections of clear water to Aqua's sewers are prohibited?

A: Not currently. In response to OUCC DR 7-14 asking whether Aqua Indiana has a program to inform and educate customers that sump pumps, area drains, foundation drains, and connection of downspouts to the collection system are prohibited, Aqua responded that the prohibition is listed in the Utility's Rules and Regulations but that it has not been part of active customer communication. Aqua further stated: "Recognizing the importance of this issue it will be formulated and communicated before year end 2016." The Utility's Wastewater Rules and Regulations are available to the public on Aqua America's website. Given the continuing SSO problem, the OUCC agrees with Aqua improving customer communication regarding the illegal connections. This is a low cost step to communicate the problem to Aqua's customers and enlist their aid in controlling illegal connections.

Q: Does Aqua's standard Developer Agreement prohibit illegal connections of sump pumps, area drains, foundation drains, and downspouts?

A: Not currently. The OUCC asked Aqua about the prohibition of such connections in its standard developer agreement (OUCC DR 7-15). Aqua responded that it did not address illegal connections in its current agreement but would in the revised version:

> The current Developer Agreement (See Appendix 7.15) does not address illegal connections. A revised version of the developer agreement has been drafted and is currently under review. The revised version does spell out the prohibition of the illegal connections.

By revising its standard developer Agreement to prohibit clear water connections, Aqua is taking another positive step yet inexpensive to address possible SSO causes.

Q: Do you have any other recommendations regarding communicating about illegal sewer connections?

A: Yes. I recommend Aqua consider developing educational materials as part of an SSO outreach program to local plumbers, including what constitutes illegal connections, why

they are prohibited, and the need to locate and eliminate such connections. Perhaps such an outreach program could be made in conjunction with Fort Wayne City Utilities, the Allen County Regional Sewer District, the Allen County Department of Health, and the Commissioner of the Allen County Building Department.

Q: Why is it a problem for sump pumps to be connected to the system?

A: If connected to the sewer system, sump pumps can quickly fill sewers with clear water. This is especially true during rain events if roof downspouts are connected to foundation drains. These connections are illegal and could be a major cause of Aqua's continuing SSO problem. To illustrate that a few sump pumps can rob sewer capacity, I calculated how many discharging pumps it takes to consume an 8-inch diameter sewer's carrying capacity. The minimum diameter gravity sewer under *Ten States Standards* is 8-inch and as shown in Section II, 77% of Aqua's sewers are the minimum size or smaller. I used published flows for Flotec brand sump pump capacities available on the internet (http://www.flotecpump.com/Index.aspx) by pump horsepower and divided the flows into an 8-inch sewer's carrying capacity calculated at 20,600 gallons per hour based on minimum slope. The most common sump pump size is ½ horsepower but sump pumps are available in sizes from ¼ to over one horsepower. Table 4 shows why very few connected sump pumps can quickly overwhelm a small gravity sewer.

Table 4 – Number of Connected Sump Pumps to fill an 8-inch Gravity Sewer[7]

Flotec Model Number	Pump Horsepower	Flow (gallons / hour) at 15 feet elevation	Sump Pumps Needed to Fill an 8-inch Gravity Sewer
FPZS25T	¼	1,500	13.7
FPZS33T	1/3	1,680	12.3
FPZS50T	½	2,160	9.5
FPZS75T	3/4	2,820	7.3
FPZT7350	1	2,940	7.0

Q: Are other sources of inflow into Aqua's sewer system likely?

A: Yes. Given peak wet weather flows of over 10 MGD for the Main Aboite Wastewater Treatment Plant collection system, other major inflow sources probably exist including sewer breaks and defects in manholes and sewers located along low-lying drainage ways, creeks, and retention ponds that permit direct storm water entry into the sanitary sewers when water levels rise. At a January 26, 2016 meeting with the OUCC, Mr. Bruns related a success story about Aqua staff locating and fixing a major hole in an interceptor sewer at a creek crossing. The break allowed boulders and cobbles to enter the interceptor along with clear water, estimated by Aqua at up to 1 MGD. In response to OUCC DR 13.12 asking for more information on the interceptor break, Aqua stated that it was discovered the week of august 24, 2015 during televising of an 18-inch vitrified clay pipe segment on the Main Aboite West interceptor as it crossed a creek. This break was repaired during the week of September 21, 2015. Aqua's collection system staff appear to be taking steps to reduce inflow sources by monitoring the collection system and searching for such breaks.

[7] Flow capacity at a 0.40 feet per 100 feet minimum slope per Section 33.41 Recommended Minimum Slopes under *Ten States Standards* for an 8-inch diameter gravity sewer flowing full is 494,000 gallons per day or approximately 20,600 gallons per hour (gph).

Q: What else can Aqua staff do to locate and remove inflow sources?

A: Aqua needs to identify which sub-basins in its collection system are significant sources of clear water flow. Through a continued flow monitoring program, Aqua should prioritize which sub-basins to target for I&I reduction efforts. This should include televising the sewer lines especially in the vicinity of retention ponds, drainage ways, and creeks, determining the presence of clear water in the sewers in the early morning hours when sanitary flows should be minimal, inspecting known and suspected problem sewers looking for inflow sources, and conducting a regular manhole inspection program looking for defects, breakage, missing manhole lids, and signs of surface water entry.

Q: What should Aqua do to control inflow from its residential customers?

A: I recommend that Aqua consider reinstituting its illegal connection control program from the 1990s that began under the first Agreed Order with IDEM, B-1391, to find and remove illegal clear water connections to the sewer system[8]. These illegal connections include basement sumps pumps, foundation drains, roof gutter connections, and area drains. Utility Center, Inc. attributed part of its inflow problem to these illegal connections at private residences. Section II. 7. of Agreed Order B-1391, required Utility Center, Inc. to do the following:

> Respondent shall continue its efforts to identify and eliminate illegal connections to the collection system, and to make use of the Allen County Building Department to require disconnection of identified illegal connections in those cases where the responsible party does not comply voluntarily.

[8] Agreed Order B-1391 between the Indiana Department of Environmental Management and Utility Center, Inc. signed on January 9, 1992, p.3.

VI. ABOITE DIVERSION PROJECT

Q: Please provide an overview of flow diversion plans in Aqua's Aboite Wastewater Division

A: In response to IDEM enforcement actions, the Utility has made at least three plans since 1992 to divert flow from the Main Aboite treatment plant to the Midwest treatment plant. The objectives were to eliminate chronic raw sewage bypassing at the Main Aboite Wastewater Treatment Plant and sanitary sewer overflows. Diversion elements changed over time and all components of the Aboite Diversion Project were finally completed on January 21, 2015. Various Aboite diversion projects are described in Attachment JTP-15.

Q: What diversion project did Aqua Indiana actually complete in 2015 that is being included in rate base under this Cause?

A: IDEM issued Construction Permit No 20451 in 2012 for the Braemer Pump Station and Force Main and the Aboite Diversion Force Main. Aqua completed the Aboite Diversion Force Main in late 2014 and the Braemer Pump Station and Force Main projects on January 21, 2015 at a cost of $5,924,522 as summarized in Table 7:

Table 7 – Completed Aboite Diversion Project – January 21, 2015

Project Component	Description	Estimated Cost
Braemer Pump Station	1,500 gpm capacity lift station with 2 pumps in service	$977,728.66
Braemer Force Main	3,966 LF 12-inch PVC force main	$431,612.78
Sycamore Hills Pump Station Modification	1,150 gpm capacity lift station with 1 pump in service - new submersible pumps and controls and wet well extension	$154,154.32
Aboite Diversion Force Main	24,554 LF of 18" PVC force main	$4,361,026.13
Total		$5,924,521.89

Q: Please describe the Aboite Diversion Project.

A: According to Construction Permit No. 20451, the Braemer Pump Station and Force Main was designed to initially divert 396,000 gallons per day (gpd) of sewage (from the 21-inch Illinois-Bridgewater Interceptor) around the Sycamore Hills Lift Station directly to the Midwest Wastewater Treatment Plant via the new 3,966 LF 12-inch force main tied into the new 24,554 LF 18-inch Aboite Diversion Force Main. The new 18-inch Aboite Diversion Force Main was to replace the existing 8-inch Sycamore Hills Lift Station force main that already routed flows to the Midwest Wastewater Treatment Plant via downstream gravity sewers. The existing 8-inch force main was to have been plugged and abandoned. Another 396,000 gpd from the Sycamore Hills Lift Station would also be pumped to the new 18-inch Aboite Diversion Force Main. The combined pumped flow into the new 18-inch Aboite Diversion Force Main was to be 792,000 gpd with a 3.168 MGD peak flow. IDEM Construction Permit 20451 is provided in Attachment JTP-16. Site visit photos for the Braemer Lift Station, the Sycamore Hills Lift Station, and the Inverness Hills Lift Station are shown in Attachment JTP-17.

Q: How much flow did Aqua divert to the Midwest Wastewater Treatment Plant via the new 18-inch Aboite Diversion Force Main in 2015?

A: In response to discovery, Aqua indicated it does not know how much flow was diverted:

> Amount of 2015 flow diverted (average daily flow and peak flow (indicate time interval) – There is currently <u>no method to record the actual flow that is diverted to the Midwest Treatment Plant via this project</u>. The automatically controlled valves work off depth of wastewater in the Sycamore Hills Lift Station to regulate the volume diverted; however Sycamore Hills still pumps to the Main Aboite while the Braemer Lift Station only pumps to the diversion to the Midwest Plant.
>
> (Aqua's Response to OUCC DR 5-8) (Emphasis added.)

Q: Were you able to estimate how much flow Aqua diverted from the Main Aboite treatment plant to the Midwest treatment plant in 2015?

A: Yes. I calculated that Aqua diverted an average of 217,000 gpd based on the differences in reported wastewater flows for the Main Aboite and Midwest treatment plants between 2014 and 2015. This method provides a rough estimate of the diverted flow. I summarize Aqua's reported flows for select years and for the 2012 to 2015 period in Table 8. Also shown are annual precipitation totals showing about ten percent more precipitation in 2015 than in 2013 and 2014. Please note that because 2012 was a severe drought year, Aqua's wastewater flows were significantly lower illustrating the effect of excessive inflow (and to a lesser unquantified amount of infiltration) on Aqua's wastewater system.

Table 8 – Main Aboite and Midwest WWTP Effluent Flows

Year	Precip. (inches)	WWTP Treated Effluent Average Flows (MGD)			Peak Day Flow (MGD)		Min. Daily Flow (MGD)	
		Main Aboite	Midwest	Total	Main Aboite	Midwest	Main Aboite	Midwest
2001	41.77	2.608	1.147	3.755				
2006	42.16	2.804	1.167	3.971	6.1	2.585	1.77	0.359
2012	28.58	2.096	1.001	3.097	5.44	1.859	1.29	0.644
2013	42.21	2.790	1.320	4.299	10.07	4.688	1.91	0.697
2014	42.84	2.274	1.476	3.750	8.58	4.493	1.38	0.904
2015	46.39	2.056	1.692	3.748	7.46	4.441	1.27	1.007
Flow change (MGD) between 2014 and 2015 from the Aboite Diversion Project								
Per WWTP		-2.18	+2.16	0.002				
Average		0.217						

Q: The Sycamore Hills Lift Station flow was to have also been diverted to the Midwest Wastewater Treatment Plant via a connection to the new 18-inch Aboite Diversion Force Main. Why is this Lift Station still discharging to the Main Aboite Wastewater Treatment Plant?

A: In a May 9, 2014 email and letter to IDEM, Aqua stated that there are 8 – 10 customers with individual grinder pump stations discharging to the existing 8-inch force main that was to have been abandoned. Therefore the 8-inch force main needs to stay in service. However, without the higher 396,000 gpd self-cleaning flows from the Sycamore Hills Lift Station, Aqua was concerned that the 8-inch force main, as well as the downstream 10-inch and 12-inch gravity sewers, would have plugging problems. In addition, the letter states that Aqua wanted to reserve excess capacity at the Midwest Wastewater Treatment Plant for future customers.

Q: What peak flow can the existing 8-inch diameter force main from the Sycamore Hills Lift Station convey?

A: The Sycamore Hills Lift Station Force Main's peak flow capacity is 1,250 gallons per minute (gpm) or 1.80 MGD based on the maximum eight feet per second (fps) force main velocity recommended by *Ten States Standards.*[9]

Q: What is the average flow that can be conveyed by the existing 8-inch diameter force main from the Sycamore Hills Lift Station convey?

A: The construction permit application submitted by Aqua indicated that the average flow from the Sycamore Hills tributary area was 396,000 gpd. I calculated that the average flow possible, based on separate sanitary sewers, is 451,000 gpd serving a connected population of 4,510 people in approximately 1,818 homes (at 2.48 people per home) based on an allowance of 100 gpd per person. The 100 gpd per person flow includes a base sanitary

[9] 49.1 Velocity and Diameter *Recommended Standards for Wastewater Facilities* (Ten States Standards), 2014 Edition, by the Great Lakes – Upper Mississippi River Board of State and Provincial Public Health and Environmental Managers.

flow of 70 gpd per person and 30 gpd per person for infiltration and inflow. The peaking factor would be 4.0 (1.80 MGD peak flow divided by 0.451 MGD average flow).

Q: How does Aqua propose to operate the existing 8-inch force from the Sycamore Hills Lift Station?

A: Aqua installed new electrical control equipment at the existing Sycamore Hills Lift Station to monitor the wet well's sewage level. During high flow conditions when the incoming sewage reaches the lag pump (2nd pump) level in the wet well, the electrical control equipment will actuate valves to switch the connection from the existing 8 -inch diameter force main to the new 18 -inch force main. Flows that normally are sent to the Main Aboite Wastewater Treatment Plant would then be routed to the Midwest Wastewater Treatment Plant along with flows from the new Braemer Pump Station.

Q: How much flow can the new 18-inch diameter Aboite Diversion Force Main convey?

A: Using the same approach of eight feet per second maximum velocity in the 18-inch force main, the Aboite Diversion Force Main peak flow capacity is 6,345 gallons per minute or 9.1 MGD.[10] Aqua currently cannot attain this peak flow because neither of the lift stations (Sycamore Hills or Braemer) have pumps capable of reaching that flow rate. As growth occurs in the service area these pumps could be changed out for larger, higher capacity pumps. However, the installed 18-inch force main was oversized to serve future customers.

Q: Is Aqua pumping enough flow through the new 18-inch Aboite Diversion Force Main to prevent the deposition of solids?

A: No. This force main is oversized for current flows. It appears that there is not enough flow being pumped through the Braemer Lift Station to produce the minimum two feet per second self-cleaning velocity, which would prevent the deposition of solids in the main.

[10] Calculated as 1.767 square feet cross sectional area times 8 feet per second velocity times 7.48 gallons/cubic foot times 60 seconds per minute equals 6,355 gallons per minute.

For one pump operating (of two pumps), Aqua's engineers indicated the flow would be 1,400 gpm. This flowrate only produces a 1.765 fps velocity (3.12 cubic feet per second (cfs) divided by 1.767 ft^2 area) which is inadequate to keep the force main cleaned.

Another method to check whether Aqua is achieving the two feet per second self-cleaning velocity is to calculate the velocity from diverting 0.217 MGD to the Midwest Wastewater Treatment Plant as calculated in my previous testimony. At 0.217 MGD, an average velocity of only 0.19 fps is produced through the new 18-inch Aboite Diversion Force Main. This is inadequate to prevent solids settling in the 4.65 mile long force main.

Q: What problems are caused by inadequate force main velocities?

A: With inadequate velocities, sewage stays in the force main long enough for the sewage to become septic (no oxygen). Based on 2015 diverted flows, the average detention time in the 18-inch Aboite Diversion Force Main is nearly 36 hours[11]. This causes odors as well as the generation of hydrogen sulfide gas, which corrodes steel, electrical components, and control panels in the raw sewage receiving structure at the Midwest Wastewater Treatment Plant. Heavier solids are also settling out in the long force main, which will eventually lead to plugging problems and a build-up of higher pressures against which the pumps must discharge. Aqua should act promptly to develop an active force main cleaning program to routinely ramp up flows in the force main by sending flows from both Lift Stations (Sycamore Hills and Braemer) through the 18-inch force main. I also recommend Aqua install a means to mechanically clean the force main by pigging.

[11] Detention time is calculated as the force main's volume (24,554 lineal feet of 18-inch force main (1.767 ft^2) times 7.48 gallons per ft^3 (324,561 gallons)) divided by 217,000 gpd average flow equals 1.5 days.

Septic wastewaters also establish and grow nuisance micro-organisms that prefer septic wastes in the wastewater treatment process. These micro-organisms, particularly *Nocardia*, also favor wastewaters with a high fats oils and grease ("FOG") content. This combination of wastes (septic and high FOG content) will exist when Aqua's Midwest plant begins receiving flow from Fort Wayne.

Q: Why did Aqua choose to build the Braemer Pump Station and Force Main and the Aboite Diversion Force Main?

A: Aqua's stated purpose was to balance flows between both of its wastewater treatment plants and provide capacity at its Main Aboite Wastewater Treatment Plant for future customer growth. Both of these objectives appear to have been achieved. The average flow spilt between the treatment plants as of 2015 is 55% to the Main Aboite Wastewater Treatment Plant and 45% to the Midwest Wastewater Treatment Plant. With the receipt of 1.5 MGD of Fort Wayne sewage in late 2016, this flow spilt will decrease to 39% for the Main Aboite treatment plant and 61% for the Midwest treatment plant. With respect to excess average flow capacity, at 2.056 MGD, the Main Aboite treatment plant is operating at 63% of its 3.25 MGD NPDES permitted capacity. Once Fort Wayne flows are added to the Midwest treatment plant, flows should reach 3.19 MGD or 91% of the expanded 3.5 MGD capacity.

VII. MASTER PLANNING

Q; Does Petitioner have a Master Plan for its collection and treatment system?

A: Yes. Utility Center, Inc., which owned the utility before Aqua, was faulted in the 1990s for not conducting Master Planning needed to guide infrastructure improvements. The Utility completed its first Master Plan in 1998 and has updated its Master Plan four times.

Greeley and Hansen, a national engineering firm, completed the latest update in May 2016. The 2016 Master Plan Update ("Update") was provided in Attachment JTP-7.

Q: What was the focus of the Master Plan Update?

A: The Master Plan now focuses on the Utility's sanitary sewer overflow problem and collection system improvements needed to eliminate SSOs, reduce infiltration and inflow, and provide collection system capacity for future growth in the areas north and west of Aqua's current service area to the year 2025. Significant portions of the Update address the technical aspects and conditions of the Utility's 34 lift stations.

Q: Does the Master Plan identify specific future projects?

A: Yes. In the Update's Recommendations Section, Greeley and Hansen recommends nine specific projects including five projects in the Main Aboite collection system, three projects in the Midwest collection system and one system-wide project. In addition, nine engineering evaluations are proposed including a hydraulic computer model update and a wastewater treatment plant study.

Q: Does the Master Plan identify feasible alternatives for the recommended projects?

A: No. The Master Plan appears to identify problem areas within the collection system pertaining mainly to the SSOs and future growth. Engineering options and feasible alternatives apparently would be developed during the next stage of each project.

Q: Does the Master Plan detail any life cycle cost analyses performed on the recommended projects?

A: No. Life cycle costing is a valuable tool that should result in the lowest total cost to ratepayers for construction, operation, and maintenance of the collection system. I recommend that in the next stage of each collection system project, that Aqua's engineers develop feasible alternatives and perform life cycle cost analyses to determine whether it

is less costly to construct, operate, and maintain trunk sewers versus continuing the current practice of constructing lift stations and force mains.

Q: What does the Engineering Evaluation labeled SW-3 - Wastewater Study entail?

A: Project SW-3: Wastewater Treatment Plant Study is described on page 6-6 of the 2016 Master Plan Update as follows:

> The implementation of the Sycamore Hills flow diversion will delay the need for additional wastewater treatment through the year 2025. It is recommended that an engineering study be conducted to identify possible locations, NPDES permit effluent limits, proposed treatment processes, and land acquisition needs.

Q: Will there be a need for a third wastewater treatment plant within ten years?

A: I do not think a third wastewater treatment plant will be warranted. With the 2016 expansion of the Midwest Wastewater Treatment Plant to 3.5 MGD and the Main Aboite Wastewater Treatment Plant capacity of 3.25 MGD, the existing treatment plants have a combined treatment capacity of 6.75 MGD based on design average flow. Current flows (2014 and 2015) were 3.75 MGD and will rise to 5.25 MGD when Fort Wayne is connected later this year. However, as explained in the following section, when Fort Wayne's higher strength wastewater is no longer received, the Midwest Wastewater Treatment Plant should be rerated to treat typical domestic wastewater at 5.2 MGD. The actual rerating may be higher due to flow equalization. The total combined design average flow capacity for the treatment plants will then be at least 8.45 MGD. Current flows would have to more than double to reach the 8.45 MGD capacity, which is unlikely. At 8.45 MGD, the current treatment plants could treat domestic wastewaters generated by a connected population of 84,500 people based on an allowance of 100 gallons per day per person.

Q: What are your recommendations regarding the Master Plan?

A: Master Planning is especially valuable. I recommend Aqua continue to periodically update its Master Plan. I also recommend that Aqua identify, develop, and evaluate feasible alternatives for its wastewater collection system using life cycle cost analyses.

VIII. WATER POLLUTION CONTROL CONTRACT WITH FORT WAYNE

Q: Has Petitioner entered into a Water Pollution Treatment Contract with the City of Fort Wayne, Indiana?

A: Yes. In Cause No. 44503, the City of Fort Wayne and Aqua Indiana, Inc. received Commission approval on October 22, 2014 for the transfer of certain water facilities and the issuance of waterworks revenue bonds. To transfer the Aqua Southwest water facilities, Petitioner and the City of Fort Wayne entered into a Utility System Asset Acquisition Agreement ("Acquisition Agreement") including a Water Pollution Treatment Contract ("Wholesale Contract") shown as Exhibit 4.14, which was required for the consummation of the transaction described in the Acquisition Agreement. The Wholesale Contract allows the City of Fort Wayne to convey a certain portion of its sewage into Aqua Indiana's Midwest Wastewater Treatment Plant for treatment and disposal. The wholesale contract was based on the expansion of the Midwest Wastewater Treatment Plant to accept Fort Wayne's additional flow and pollutant load. The terms, provisions and limitations of such service are described in the Wholesale Contract. A copy of an executed Wholesale Contract is included as Attachment JTP-18.

Q: What wastewater volume can Fort Wayne send to the Midwest Plant for treatment and disposal?

A: Under the Wholesale Contract's provisions in Section IV. Volume and Capacity (pages 8-9), Fort Wayne can send an average flow of 1.5 MGD based on a calendar year but no more than 5.0 MGD in any 24-hour period. Peak flowrates (15 minute duration) are also limited under the contract. The ten year Wholesale Contract has an automatic five year renewal after ten years, Fort Wayne has the right but not the obligation to send any sewage to Aqua.

Q: What pollutant load can Fort Wayne send to Aqua's Midwest Plant?

A: The wholesale contract does not specify pollutant quantities that Fort Wayne can send to the Midwest Wastewater Treatment Plant. Primary pollutants determine treatment tank capacities and include 5-day carbonaceous Biochemical Oxygen Demand ("$cBOD_5$"), total suspended solids ("TSS"), Ammonia, and Phosphorus. Treatment plants are hydraulically designed to process flows, but more importantly are designed to meet all NPDES limits by removing the pollutants conveyed in those sewage flows. The NPDES permit stipulates both concentration based (mg/l) and mass based (pounds per day (lbs./d)) discharge limits. The treatment plant must also handle peak wastewater flows with properly sized pumps, channels, pipes, and process tanks such as clarifiers.

Q: Did the Midwest Wastewater Treatment Plant have excess capacity to accept the additional 1.5 MGD of Fort Wayne wastewater when the Wholesale Contract was signed in December 2014?

A: No. The existing Midwest Wastewater Treatment Plant had a 1.7 MGD design average flow capacity. Following construction of the Braemer Pump Station and Force Main and the Aboite Diversion Force Main in January 2015 to prevent SSOs, the Midwest treatment plant processed an average of 1.7 MGD in 2015 which equaled its pre-expansion design flow. No excess capacity was available. The Midwest treatment plant had to be expanded

to treat Fort Wayne's wastewater. Aqua's promise to treat that flow, for which it did not yet have treatment capacity, was one item of consideration given in exchange for the transfer of utility assets to Fort Wayne for which Aqua was paid more than $60,000,000.

IX. MIDWEST WASTEWATER TREATMENT PLANT EXPANSION

Q: Please describe the Midwest Wastewater Treatment Plant expansion project.

A: Aqua expanded the Midwest Wastewater Treatment Plant in 2015 and 2016 to treat 3.5 MGD of combined wastewaters from Aqua's existing customers, Fort Wayne, and future customers. IDEM issued Construction Permit 21291 on March 11, 2015. This permit is shown in Attachment JTP-19. In addition to modifications and expansions of all treatment units except sludge dewatering, the major expansion features included:

- two new raw sewage pumps
- a new flow metering vault and piping for receiving Fort Wayne's pumped wastewater
- one new raw sewage screen (separate project)
- conversion of the two aeration tanks (507,000 gallons each) to an equalization basin for storing peak Fort Wayne flows and to additional sludge processing tanks:
- two new phased isolation oxidation ditches with anoxic selector tanks (total volume of 2.97 MG or 397,059 cubic feet)
- a third 80-ft. diameter final clarifier

Q: What was the design pollutant load for the expanded Midwest wastewater treatment plant?

A: According to the IDEM Construction Permit the two new oxidation ditches are designed to treat screened sewage containing 8,699 lbs./d of $cBOD_5$. The $cBOD_5$ pollutant load is the basis used to size biological treatment tanks.

Q: Please explain how Aqua and its engineers determined the design flows and the pollutant load for $cBOD_5$.

A: Aqua retained American Structurepoint engineers to evaluate the existing Midwest Wastewater Treatment Plant in 2013 and recommend a Capital improvement Plan to process additional flows and loadings from Fort Wayne with allowance for future growth. The American Structurepoint report is provided in Attachment JTP-20. American Structurepoint recommended adding two new 507,000 gallon aeration basins of the same configuration as the existing two basins in space previously reserved for new aeration basins. The new and existing aeration basins would be configured for biological phosphorus removal. A third final clarifier was also proposed as well as aerated sludge holding tanks and a flow equalization basin. American Structurepoint estimated the probable construction costs at $8.1 million. The design average flow from the American Structurepoint report was 3.1 MGD. Peak flow was 10.6 MGD and the design $cBOD_5$ loading was 8,150 lbs./d.

For actual design in 2014, Aqua retained URS Corporation. The URS design proposal and the Basis of Design Report are included in Attachment JTP-21. URS proposed a different treatment process using oxidation ditches but included a third final clarifier and reused the existing aeration basins for flow equalization and sludge holding. URS retained the same 8,150 lbs./d cBOD5 design loading from the American

Structurepoint report. Design average flow was raised to 3.2 MGD and the peak flow increased to 11.0 MGD. In its design proposal, URS estimated the construction costs at $6,829,000.

Based on a review of 2013/2014 Monthly report of Operations (MRO) data, URS Corporation estimated the flow contributions and $cBOD_5$ loadings from existing customers, future customers and Fort Wayne shown in Table 9. The OUCC calculated the $cBOD_5$ concentrations shown in the table since they were not listed by URS Corporation.

Table 9 – Midwest WWTP Expansion Project – Flow and Load Contributions

Discharger	Design Avg. Flow (MGD)	Peak Flow (MGD)	Design $cBOD_5$	
			(mg/l)	(lbs./d)
Existing Customers	1.2	4.7	207	2,071
Future Customers	0.5	1.3	202	842
Fort Wayne – Junk Ditch Interceptor	0.5	2.0	1,130	4,712
Fort Wayne – Coverdale Interceptor	1.0	3.0	63	525
Total	3.2	11.0	305	8,150

Q: Can you explain why the design $cBOD_5$ load of 8,699 lbs./d exceeds the 8,150 lbs./d loadings shown in both the American Structurepoint and URS reports?

A: No. One explanation may be that Aqua raised the design average flow to reflect actual Midwest treatment plant influent flows, which had increased in 2014 to nearly 1.5 MGD and would increase again when the Aboite Diversion project was in service in January 2015. Table 10 summarizes the design flows and the $cBOD_5$ pollutant loadings.

Table 10 – Midwest WWTP Expansion Project – Design Flows and Loadings

Report	Design Avg. Flow (MGD)	Peak Flow (MGD)	Design $cBOD_5$	
			(mg/l)	(lbs./d)
American Structurepoint – 2013	3.1	10.6	306	8,150
URS Corporation – 2014	3.2	11.0	305	8,150
IDEM Construction Permit - 2015	3.5	13.1	298	8,699

The OUCC asked Aqua for the flow calculations showing how the 3.5 mgd design average flow and the 13.1 mgd peak flow were determined. Aqua responded it had not identified any flow calculations showing how the design average and peak flows were determined:

> Our previous engineer did a cost analysis on expanding the flow capacity by 0.4 MGD for an additional $200,000 simply by raising the ditch walls by two feet. This was an easy change as it only entailed concrete work. Aqua Indiana has not identified any flow calculations showing how the 3.5 mgd design average flow and the 13.1 mgd peak flow were determined.
>
> Aqua's Response to OUCC DR 7-22.

Q: Is the Midwest plant expansion project, which increases the design average flow to 3.5 MGD, needed to treat Fort Wayne wastewater flows

A: Yes. The expansion project as sized, provides treatment capacity for Fort Wayne sewage as well as flows being diverted to the Midwest Wastewater Treatment Plant from the Main Aboite collection system that were contributing to prohibited sanitary sewer overflows. In addition, the project also addresses new phosphorus limits that IDEM is issuing to major dischargers in Indiana.

Q: Do you agree that the Midwest Plant Expansion will result in a 3.5 MGD plant?

A: Yes. Based on the pollutant loads determined for Fort Wayne, the plant as designed is capable of treating a design average flow of 3.5 MGD. However, for normal domestic sewage, which has a much lower cBOD5 concentration of 200 mg/l, typical from Aqua's

other residential and commercial customers, the design average capacity of the expanded plant is 5.2 MGD.[12] The demand the current customers place on the system is 1.7 MGD.

Q: Was the Midwest Plant expansion project competitively bid?

A: Yes. Aqua received competitive bids from four non-affiliated contractors in 2015. These contractors were invited to bid by Aqua based on contractor recommendations from Aqua's engineers.

Q: What bids were received?

A: The bids for the Midwest WWTP expansion project are shown in Table 11. Aqua awarded the project to the low bidder, Wiegand Construction Co., Inc.

Table 11 – Bid summary for the Midwest WWTP Expansion Project

Contractor	Base Bid Amount	FWCU Wastewater Connection (included in Base Bid Amount)
Kokosing Industrial, Inc.	$8,750,000	$250,000
Shook Construction Co.	$9,799,000	$250,000
Thieneman Construction, Inc.	$8,214,000	$225,000
Wiegand Construction Co., Inc.	$7,269,000	$341,000

The bids shown in Table 11 do not include the oxidation ditch equipment package supplied separately under Aqua's $1.4 million direct purchase agreement with I. Kruger, Inc./Veolia.

Q: What was the Design Engineer's cost estimate for the Midwest Expansion project?

A: Aqua did not provide a cost estimate from the Design Engineer, URS Corporation that was prepared based on the final plans and specifications. In response to OUCC DR 9-9 asking

[12] Calculated as the oxidation ditches organic loading of 8,699 lbs./d of cBOD5 divided by 200 mg/l cBOD5 for domestic sewage divided by 8.34 (conversion factor) which yields 5.2 MGD.

for the Engineer's cost estimate, Aqua referred to the estimated costs from the 2013 American Structurepoint Report. This estimate is not pertinent since Aqua chose not to build the American Structurepoint recommended configuration.

The URS design proposal showed an estimated construction cost of $6,829,000. The Construction Permit application submitted to IDEM listed the estimated project cost as $7 million.

Q: What is the total project cost for the Midwest WWTP Expansion project?

A: According to the testimony of Mr. Bruns (Attachment B), the total project costs $9,741,000.

X. RECOMMENDATIONS

Q: Please summarize your recommendations regarding Aqua's proposed capital program.

A: The following are the recommendations I made throughout my testimony:

1. I recommend the Commission order Aqua to completely fill out page S-7 in the Annual Report by properly listing all of its gravity sewers and force mains for each wastewater division listing the diameter and type of gravity sewers and force mains, the lengths at the beginning and end of the year, and the lengths added and retired during the year.
2. I recommend Aqua be directed to update its collection system map and its gravity sewer and force main asset inventories to account for all of its collection system assets.
3. I recommend the Commission find Petitioner's requested $1,257,750 Main Aboite Basin Improvements (MABI) is not a major project and that it not include the total $1,257,750 in rate base. However, I recommend the CIPP project be considered a major project and the

$750,287.60 cost of the CIPP project be included in rate base provided it has been completed and placed in service no less than ten days before the final hearing.

4. I recommend the Commission order Aqua to provide semi-annual written update reports detailing its progress in completing the Additional Action Plan submitted to the Indiana Department of Environmental Management, documenting information on any SSO that occurs in its system, and any new enforcement actions brought by IDEM, until Agreed Order 2010-18952-W or its successor Agreed Orders are closed.
5. I recommend Aqua be directed to increase its efforts to prevent inflow into its system and evaluate reinstituting its program from the 1990s to find and remove illegal clear water connections to the sewer system.
6. I recommend Aqua consider developing educational materials as part of an SSO outreach program to local plumbers, including what constitutes illegal connections, why they are prohibited, and the need to locate and eliminate such connections.
7. I recommend Aqua be directed to act promptly to develop an active force main cleaning program to routinely ramp up flows in the Aboite Diversion force main by sending flows from both Lift Stations (Sycamore Hills and Braemer) through the 18-inch force main. I also recommend Aqua install a means to mechanically clean the force main by pigging.
8. I recommend that Aqua be directed to use engineers to develop feasible alternatives and perform life cycle cost analyses to determine whether it is less costly to construct, operate,

and maintain trunk sewers versus continuing the current practice of constructing lift stations and force mains.

9. I recommend Aqua continue to periodically update its Master Plan and that Aqua identify, develop, and evaluate feasible alternatives for its wastewater facilities using life cycle cost analyses.

Q: Does this conclude your testimony?

A: Yes.

Appendix A

Q: Please describe your educational background and experience.

A: In 1980 I graduated from Purdue University, where I received a Bachelor of Science degree in Civil Engineering, having specialized in Environmental Engineering. I then worked with the Peace Corps for two years in Honduras as a municipal engineer and as a Project Engineer on self-help rural water supply and sanitation projects funded by the U.S. Agency for International Development (U.S. AID). In 1984 I earned a Master of Science degree in Civil Engineering and Environmental Engineering from Purdue University. I have been a Registered Professional Engineer in the State of Indiana since 1986. In 1984, I accepted an engineering position with Purdue University, and was assigned to work as a process engineer with the Indianapolis Department of Public Works at the City's Advanced Wastewater Treatment Plants. I left Purdue and subsequently worked for engineering consulting firms, first as a Project Engineer for Process Engineering Group of Indianapolis and then as a Project Manager for the consulting firm HNTB in Indianapolis. In 1999, I returned to the Indianapolis Department of Public Works as a Project Engineer working on planning projects, permitting, compliance monitoring, wastewater treatment plant upgrades, and combined sewer overflow control projects.

Q: Have you previously testified before the Indiana Utility Regulatory Commission ("Commission")?

A: Yes.

Appendix B

Attachment JTP-1 – CTA and Aboite Division Service Areas by WWTP

Attachment JTP-2 – Map of Sewer Service Areas in Allen County dated June 14, 2016

Attachment JTP-3 – History, Description, Process Flow Diagram, and Site Photos of the Main Aboite WWTP

Attachment JTP-4 – History, Description, Process Flow Diagram, and Site Photos of the Midwest WWTP

Attachment JTP-5 – Wastewater Collection System Inventory

Attachment JTP-6 – Lift Station Information

Attachment JTP-7 – Master Plan Update, Greeley and Hansen, May 2016

Attachment JTP-8 – Insituform Bid

Attachment JTP-9 – Agreed Order 2010-18952-W

Attachment JTP-10 – List of Sanitary Sewer Overflows and 2015 – 2016 Incident Reports

Attachment JTP-11 – EPA Guide for Estimating Infiltration and Inflow

Attachment JTP-12 – Customer Counts by WWTP 2012 - 2015

Attachment JTP-13 – Infiltration and Inflow flow data and calculations

Attachment JTP-14 – WWTP Inspection Reports and Correspondence

Attachment JTP-15 – Aboite Diversion Projects Description

Attachment JTP-16 – IDEM Construction Permit No. 20451 – Braemer Pump Station & Force Main and Aboite Diversion Force Main, dated September 6, 2012 and modification dated May 14, 2014

Attachment JTP-17 – Site Visit Photos – Braemer Lift Station, Sycamore Hills Lift Station, and Inverness Hills Lift Station

Attachment JTP-18 – Water Pollution Treatment Contract with Fort Wayne

Attachment JTP-19 – IDEM Construction Permit No. 21291 – Midwest Wastewater Treatment Plant Expansion

Attachment JTP-20 – Evaluation of Midwest WWTP, American Structurepoint 2013

Attachment JTP-21 – URS Corporation – Design Proposal and Basis of Design Report

Sewer Service Areas - Allen County

- Huntertown exlusive water and sanitary sewer area - no other utility can provide water or sanitary sewer service in this area without Huntertown's permission (see October 1, 2015 IURC Final Order and 2015 Interlocal Cooperation Agreement)
- Areas where Aqua has been granted Non-Exclusive CTA per Fort Wayne and Aqua Agreement, area not verified by IURC
- Per 2015 Interlocal Cooperation Agreement, the City of Fort Wayne is permitted to provide water or sanitary sewer service in these areas
- Per 2015 Interlocal Cooperation Agreement FWCU may provide service in this area with Huntertown approval
- Areas not serviced by Fort Wayne Utilities
- Areas not serviced by Fort Wayne Utilities
- Areas directly serviced by others and then send their wastewater to Fort Wayne Utilities
- Areas directly serviced by the Allen County Regional Water and Sewer District and then send their wastewater to Fort Wayne Utilities
- Area Relinquished by Fort Wayne Utilities

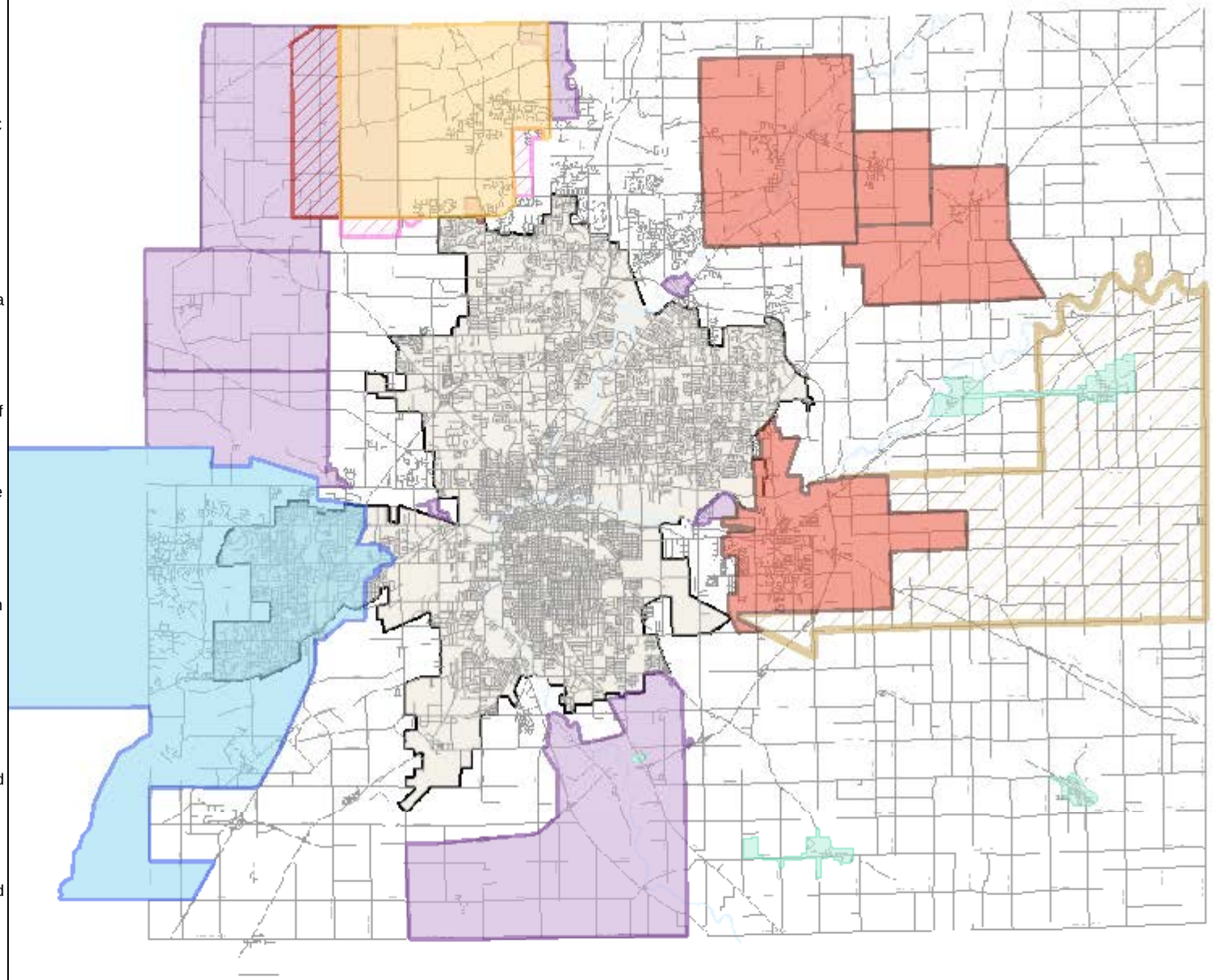

1" = 32000'

N

June 14, 2016

This map is intended for general reference purposes only. The information displayed herein is not guaranteed to be

© 2015 City of Fort Wayne

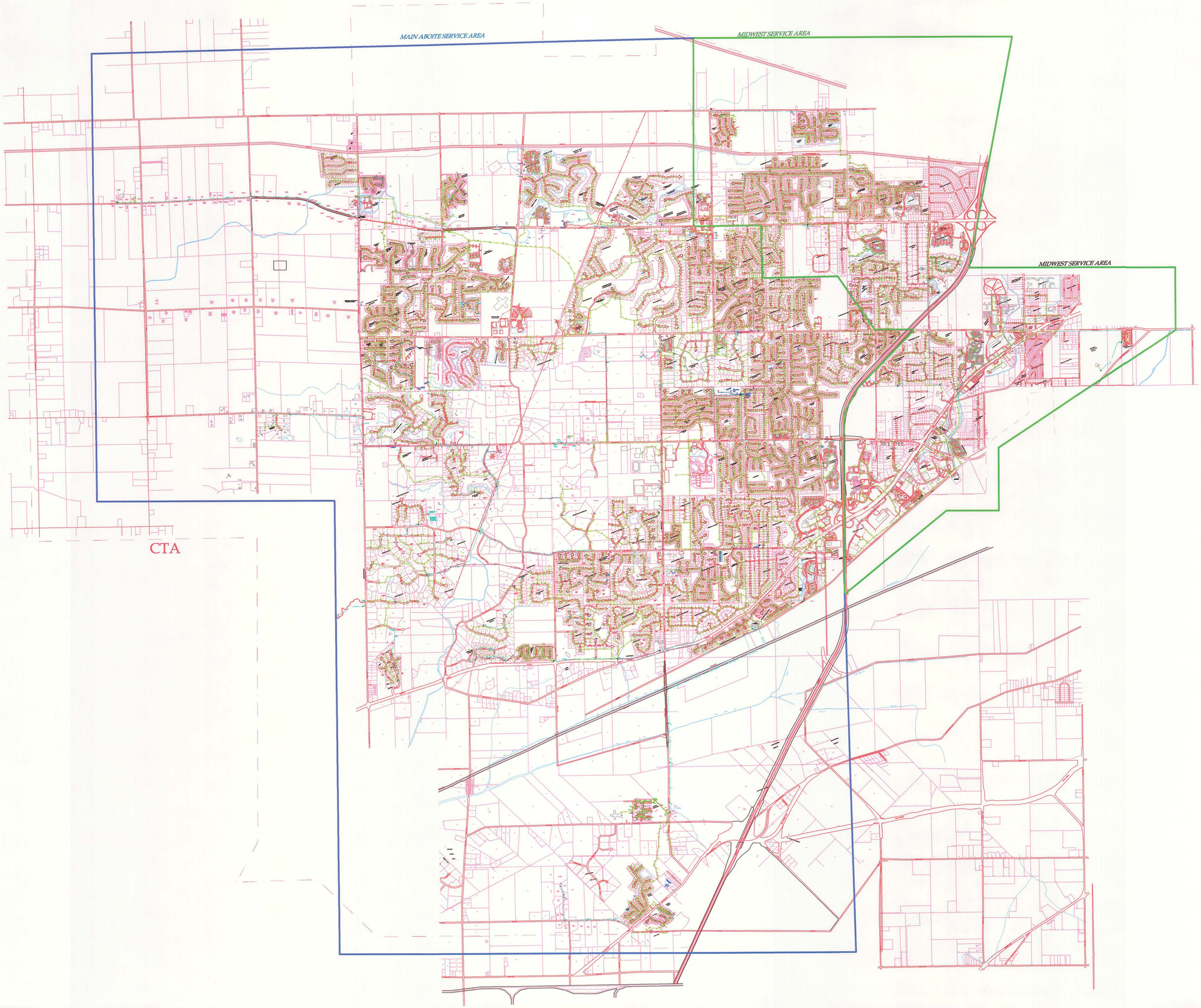
MAIN ABOITE SERVICE AREA
MIDWEST SERVICE AREA
MIDWEST SERVICE AREA
CTA

Description of the Main Aboite Wastewater Treatment Plant

The Main Aboite wastewater treatment plant ("WWTP") was first constructed in 1952 as a concrete walled package plant to serve development in an area of southwest Allen County in Aboite Township. Ultimately, developers and Utility Center, Inc., predecessor to Aqua Indiana, built eight package plants in Aboite Township. The Main Aboite WWTP was the largest and primary plant and for this reason it received the name "Main" Aboite.[1] The Utility removed all the other package plants by consolidating treatment at Main Aboite the Midwest WWTP which was constructed in 1963. The Main Aboite WWTP has had several major additions with the last major upgrades occurring from 2000 to 2003. The current process flow diagrams for the Main Aboite WWTP is provided in Figure 1. Monthly average, peak monthly, and minimum monthly effluent flows and raw sewage pollutant loads reported by Aqua for 2012 to 2015 are provided in Table 1.

Table 1 – Main Aboite Wastewater Treatment Plant Flow and Pollutant Load Summary

Year	Avg. Flow (MGD)	Peak Flow (MGD)	Min. Flow (MGD)	Avg. $cBOD_5$ Loading		Avg. TSS Loading	
				(mg/l)	(lbs./day)	(mg/l)	(lbs./day)
2012	2.096	5.44	1.29	180	3,144	224	3,915
2013	2.790	10.07	1.91	166	3,854	202	4,708
2014	2.274	8.58	1.38	154	2,930	194	3,688
2015	2.056	7.46	1.27	117	1,998	151	2,598

The facility consists of three biological treatment plants consisting of two 0.5 million gallons per day (MGD) circular steel walled activated sludge package plants built in 1968 and 1972 (Cantex plants) operating in parallel with a 1.25 MGD concrete walled sequencing batch

[1] Per a discussion with Mark Aurich, Wastewater Treatment Plant Supervisor, during the May 17, 2016 site visit.

reactor (SBR) built in 1984. The utility installed a sand filter in 1972 to filter clarified effluent from the two 0.5 MGD package plants. The Main Aboite plant was upgraded and expanded during 2000 to 2003 by adding an 80-feet diameter polishing clarifier and other improvements including much larger raw sewage and storm pumps, a belt filter press for sludge processing, a flow splitter structure, and a coarse screen.

The polishing clarifier is a concrete center feed unit permitted to clarify up to 5.3 MGD of treated effluent from both package plants and the SBRs. Mark Aurich, Wastewater Treatment Plant supervisor, reports being able to push a peak of 8.5 MGD of biologically treated flows through the polishing clarifier for one hour.

Design Average Flow The Main Aboite WWTP is nominally rated for 2.25 million gallons per day (MGD) but has a higher permitted 3.25 MGD design average flow capacity based on mass limits in the National Pollutant Discharge Elimination System (NPDES) permit. The NPDES permit requires full biological treatment for flows up to 5.3 MGD through the three biological treatment basins and the polishing clarifier.

The Main Aboite WWTP treated an average of 2.05 MGD in 2015 down from 2,79 MGD in 2013 and 2.27 MGD in 2014. Treated flows decreased following the Aboite Diversion completion in January 2015. The diversion project pumped an average of 0.217 MGD away from the Central Aboite collection system (northwest side) in 2015 from the new Braemer Lift Station directly to the Midwest WWTP via 12-inch and 18-inch force mains.

Permitted Peak Weather Flow Treatment at the Main Aboite WWTP During rainfall events, Aqua is permitted to divert peak wet weather flows above 5.3 MGD directly to the polishing clarifier via internal outfall 101 for partial treatment by chemical precipitation (no biological treatment), disinfection, and recombination with fully treated effluent prior to

dechlorination and discharge. The internal diversions route diluted raw sewage around the biological treatment tanks routinely during wet weather events. Aqua reports the NPDES permit limits are typically met for the recombined flows. Aqua reported the following annual number of wet weather (high flow) diversions. (Aqua response to OUCC DR 4.17)

Table 2 – Permitted Wet Weather Flow Diversions at Flows Exceeding 5.3 MGD at the Main Aboite WWTP (Internal Diversion Outfall 101)

Year	**2009**	**2010**	**2011**	**2012**	**2013**	**2014**	**2015**	**Total**
Number of Wet Weather Diversions per Year	19	7	33	2	28	26	9	124

The Main Aboite plant also has post aeration, chlorination and de-chlorination for disinfection, five aerated sludge holding tanks, a single belt filter press for sludge dewatering prior to landfill disposal, and two generators for back-up power. Two standby power generators are needed because the WWTP power supply consists of two independent sides powering separate parts of the plant. The Main Aboite WWTP is in good condition and is consistently producing a high quality effluent that complies with all NPDES limits. Raw sewage bypassing directly to the receiving stream has been essentially eliminated in contrast to the high number of bypass events experienced in the early 2000s. However, in response to OUCC DR 4.16, Aqua reports that one raw sewage bypass did occur at the Main Aboite WWTP on August 2, 2013 due to flooding of the receiving stream that impeded effluent discharge.

The process flow schematic for the Main Aboite WWTP and site visit photos from May 17, 2016 follow.

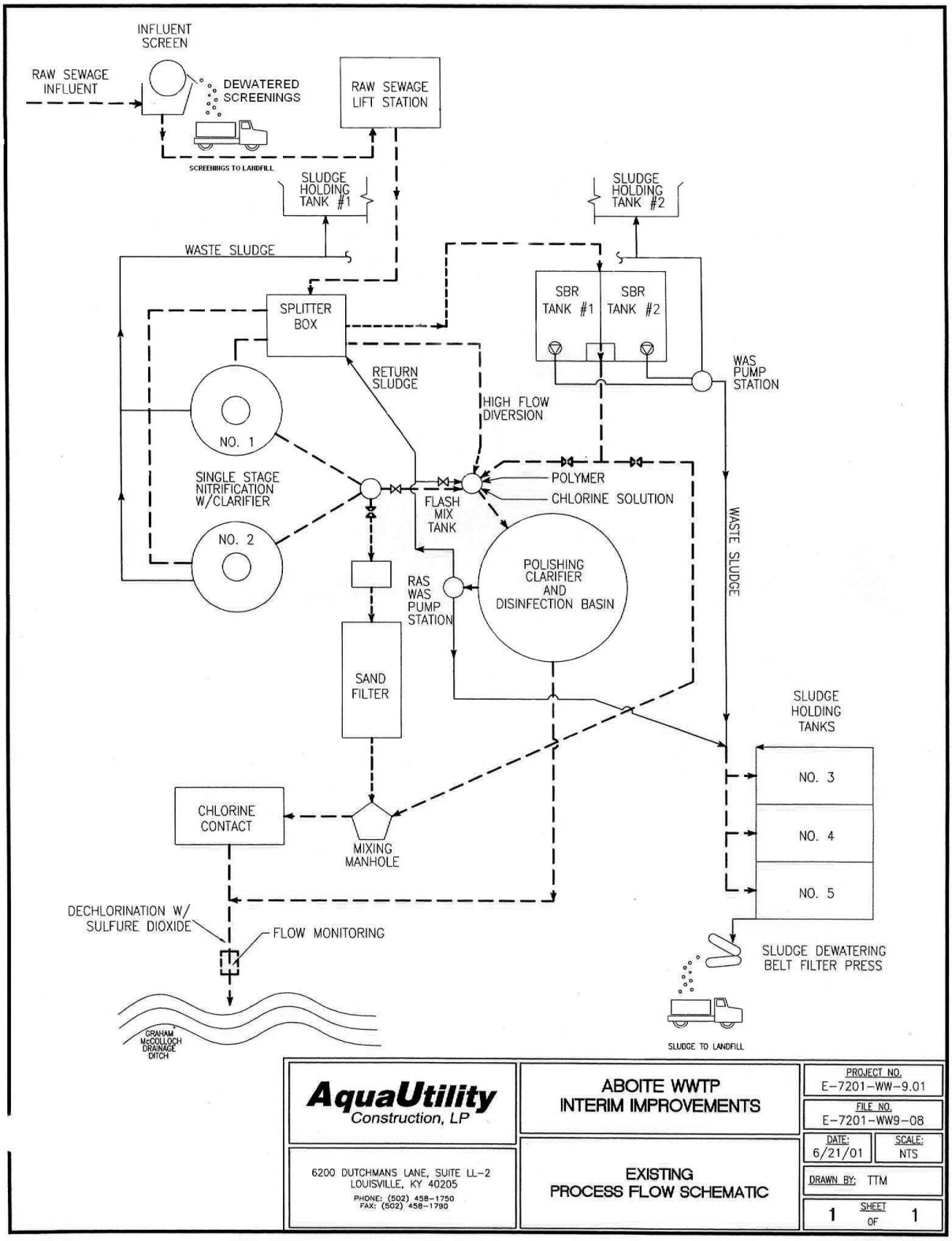

Figure 1 – Main Aboite WWTP Process Flow Schematic

Figure 2 – Main Aboite WWTP aerial view showing the Polishing Clarifier (upper left) and the sludge holding tanks and Belt Filter Press Building (lower left).

Figure 3 – View of Main Aboite WWTP's Cantex Package Plants (foreground), Blower Building and Sand Filter (upper right), and Polishing Clarifier (upper left).

Figure 4 – Main Aboite WWTP – Sequencing Batch Reactors and standby generator

Figure 5 – Main Aboite WWTP Polishing Clarifier

Figure 6 - Main Aboite WWTP – Belt Filter Press for sludge dewatering

Figure 7 – Main Aboite WWTP – Aerobic sludge digestion tanks and Cantex Package Plant

Description of the Midwest Wastewater Treatment Plant

The Midwest wastewater treatment plant (WWTP) is nominally rated for 1.7 million gallons per day (MGD) but currently has a much higher permitted 4.00 MGD design average flow capacity based on mass limits in the National Pollutant Discharge Elimination System (NPDES) permit. The Midwest WWTP treated an average of 1.69 MGD in 2015. Treated flows increased from 2013 and 2014 following the Aboite Diversion completion in January 2015. The diversion project pumped an average of 0.217 MGD away from the Main Aboite WWTP's collection system in 2015 directly to the Midwest WWTP via 12-inch and 18-inch force mains. Aqua reports that there have been no raw sewage bypasses from the Midwest WWTP from 2009 to 2015. Monthly average, peak monthly, and minimum monthly effluent flows and raw sewage pollutant loads reported by Aqua for 2012 to 2015 are provided in Table 1.

Table 1 – Midwest Wastewater Treatment Plant Flow and Pollutant Load Summary

Year	Avg. Flow (MGD)	Peak Flow (MGD)	Min. Flow (MGD)	Avg. $cBOD_5$ Loading		Avg. TSS Loading	
				(mg/l)	(lbs./day)	(mg/l)	(lbs./day)
2012	1.001	1.859	0.644	215	1,799	217	1,813
2013	1.320	4.688	0.697	207	2,284	204	2,241
2014	1.476	4.493	0.904	204	2,506	201	2,470
2015	1.692	4.441	1.007	198	2,786	200	2,823

The original Midwest Plant was constructed in 1963. It was an activated sludge system consisting of influent pumping, fine screening, single stage nitrification activated sludge in two converted concrete SBR tanks, two 80-ft diameter concrete center feed final clarifiers, ultra-violet disinfection, post aeration, sludge dewatering by a belt filter press, and sludge disposal to a landfill

This plant also has a diesel generator to provide back-up power. The Midwest WWTP is being expanded to treat 1.5 MGD of higher strength wastewater flows from Fort Wayne.

Aqua expanded the Midwest Wastewater Treatment Plant in 2015 and 2016 to treat 3.5 MGD of combined wastewaters from Aqua's existing customers, Fort Wayne, and future customers and a peak hourly flow of 13.1 MGD. IDEM issued Construction Permit 21291 on March 11, 2015. In addition to modifications and expansions of all treatment units except sludge dewatering, the major expansion features included:

- two new raw sewage pumps
- a new flow metering vault and piping for receiving Fort Wayne's pumped wastewater
- one new raw sewage screen (separate project)
- conversion of the two aeration tanks (507,000 gallons each) to an equalization basin for storing peak Fort Wayne flows and to additional sludge processing tanks:
- two new phased isolation oxidation ditches with anoxic selector tanks (total volume of 2.97 MG or 397,059 cubic feet)
- a third 80-ft. diameter final clarifier

According to the IDEM Construction Permit the two new oxidation ditches are designed to treat screened sewage containing 8,699 lbs./d of $cBOD_5$. The $cBOD_5$ pollutant load is the basis used to size biological treatment tanks. Once Fort Wayne sewage is no longer discharged, the expanded Midwest WWTP will be able to treat normal domestic sewage at a design average flow of 5.2 MGD. An aerial view of the original WWTP is shown in Figure 1. The Process Flow Schematics for the original and expanded WWTP are shown in Figures 2 and 3. An aerial view of the expanded plant during construction and site visit photos are shown in Figures 4 – 16.

Figure 1 – Midwest wastewater treatment plant aerial view prior to 2016 expansion.

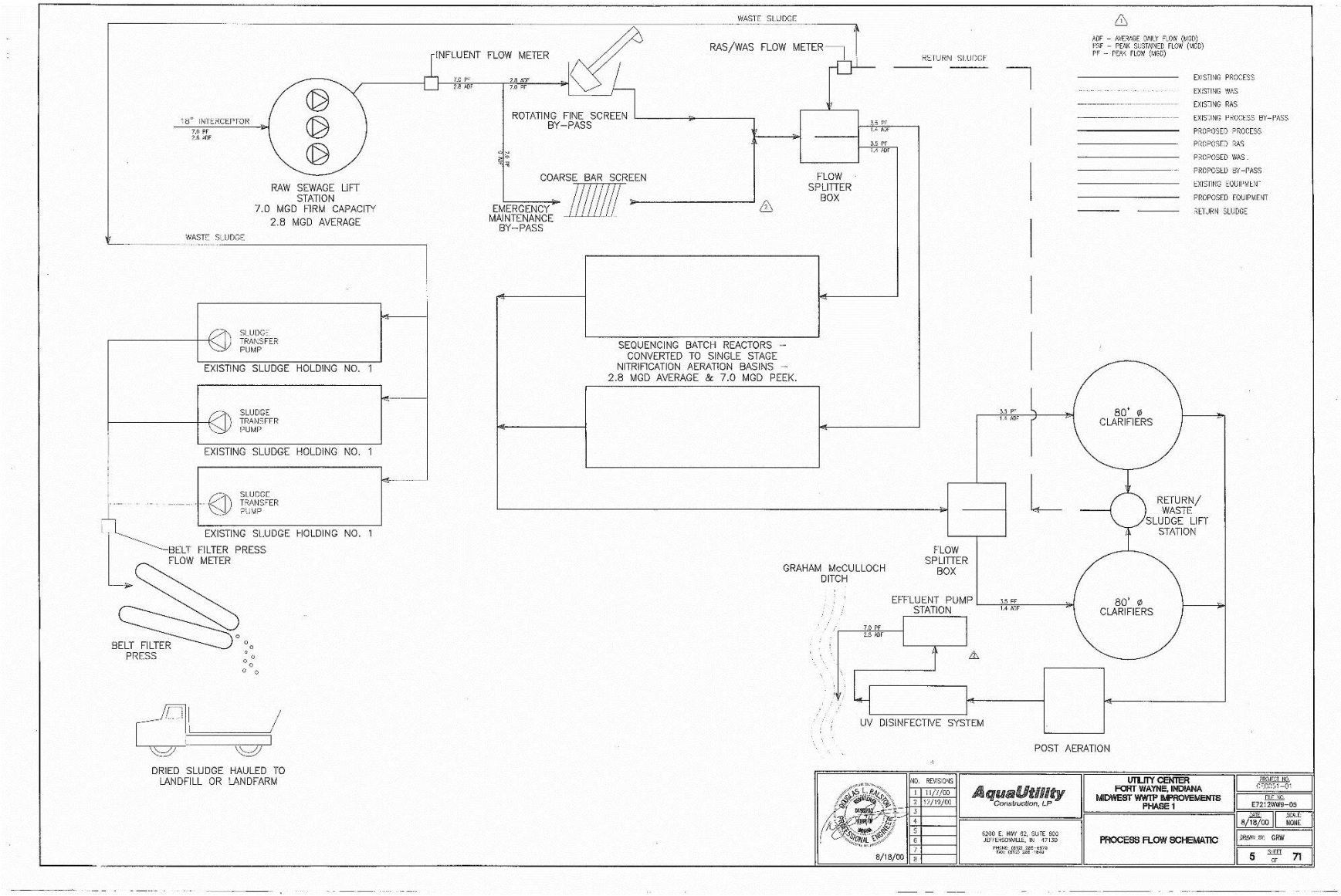

Figure 2 – Midwest WWTP Process Flow Schematic prior to expansion in 2016

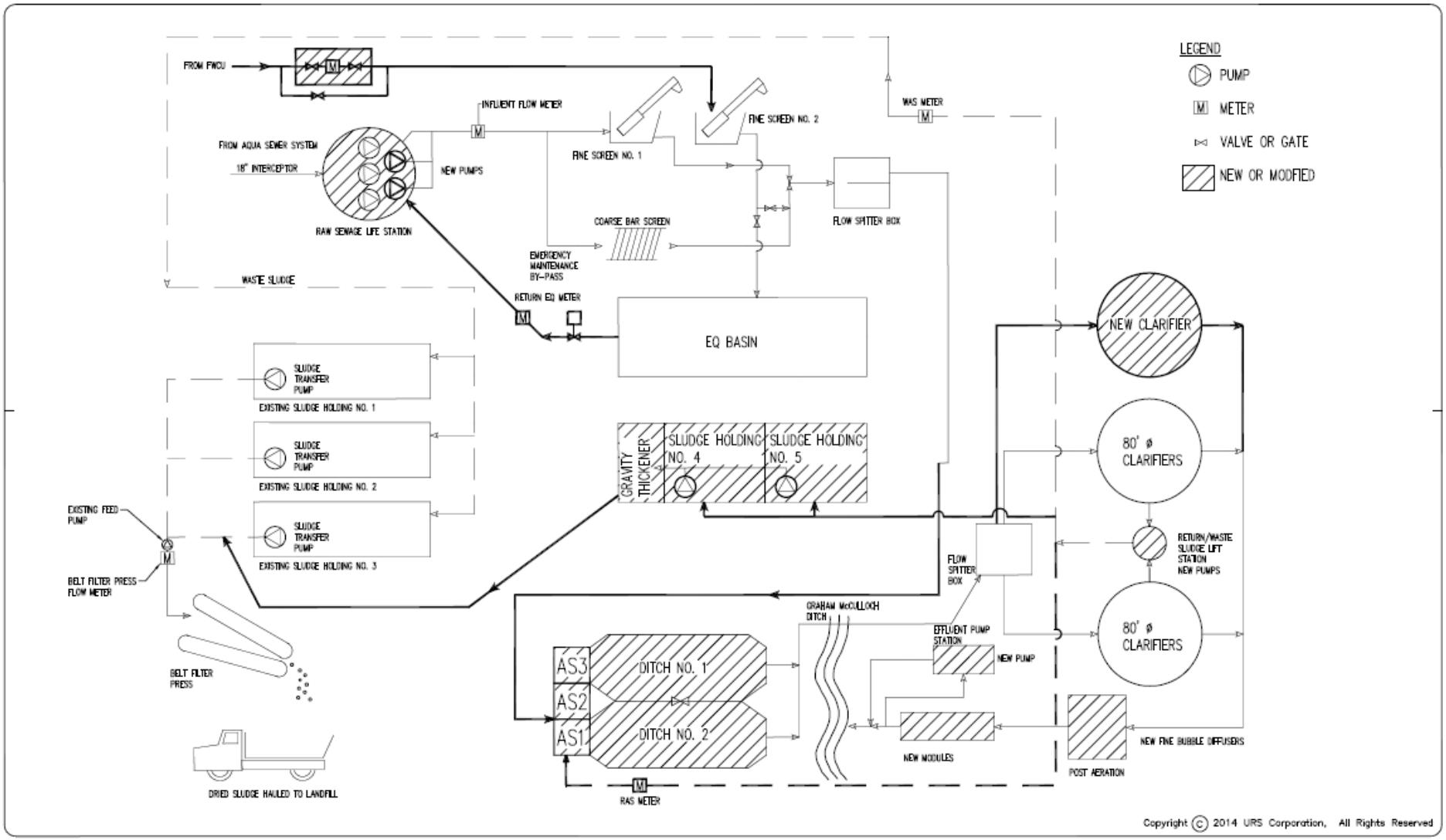

PROCESS FLOW SCHEMATIC

TITLE
AQUA MIDWEST WWTP

URS CORPORATION, INDIANAPOLIS, IN., 317-532-5400

DATE 07/28/14	JOB NO.
DR.	SKETCH NO.
CK.	FIG. 1

Figure 4 – Aerial view of the Midwest WWTP showing the two new oxidation ditches (center of the photo) and the third circular final clarifiers under construction. The selector basins for biological phosphorus removal are left of the lower oxidation ditch.

Figure 5 – Aerial view of the expanded Midwest WWTP (March 2016)

Figure 6 – Midwest WWTP under construction in 2016

Figure 7 – Aerial view of the two new oxidation ditches and selector basins (lower left corner) for biological phosphorus removal

Figure 8 – Midwest WWTP under construction in 2016

Figure 9 –Midwest WWTP – Raw Sewage Pump Station

Figure 10 – Midwest WWTP – Raw Sewage Screens

Figure 11 –Fort Wayne connection to the Equalization Basin and Screen Building

Figure 12 – Midwest WWTP Phased Isolation Oxidation Ditches (2016)

Figure 13 – Final Clarifier showing scum beach and scraper arms

Figure 14 – Clarifier Splitter Box and RAS Lift Station

Figure 15 – Final clarifier effluent launder

Figure 16 – Ultra-violet disinfection channel

Aqua Indiana, Inc. - Aboite Wastewater Division
Cause No. 44752 26-May-16
Force Main Inventory by Wastewater Treatment Plant Service Area (OUCC DR 4-4)

A. Main Aboite WWTP – Force Main Length (feet) by Pipe Diameter & Type

Force Main Dia. (inches)	Cast Iron	Ductile Iron	PVC	HDPE	Other (please specify type)	Other Asb, Cement	Total Length (feet)	% of Total
1.5							0	0.0%
2			2020	20157			22,177	18.0%
3				2258			2,258	1.8%
4			8411			452	8,863	7.2%
6			5220	5917		4034	15,171	12.3%
8			6178	1580			7,758	6.3%
10			3050	5558			8,608	7.0%
12				7566			7,566	6.1%
14							0	0.0%
15							0	0.0%
16				24577			24,577	19.9%
18			26400				26,400	21.4%
21							0	0.0%
24							0	0.0%
Total	0	0	51,279	67,613	0	4,486	123,378	100.0%
% of Total	0.0%	0.0%	41.6%	54.8%	0.0%	3.6%	100.0%	

Aqua Indiana, Inc. - Aboite Wastewater Division
Cause No. 44752 26-May-16
Force Main Inventory by Wastewater Treatment Plant Service Area (OUCC DR 4-4)

B. Midwest WWTP – Force Main Length (feet) by Pipe Diameter and Type

Force Main Dia. (inches)	Cast Iron	Ductile Iron	PVC	HDPE	Other (please specify type)	Other Asb, Cement	Total Length (feet)	% of Total
1.5				196			196	1.2%
2				4,257			4,257	27.0%
3							0	0.0%
4		3,814	1,598	1,000		684	7,096	45.1%
6							0	0.0%
8							0	0.0%
10							0	0.0%
12							0	0.0%
14				4,200			4,200	26.7%
15							0	0.0%
16							0	0.0%
18							0	0.0%
21							0	0.0%
24							0	0.0%
Total	0	3,814	1,598	9,653	0	684	15,749	100.0%
% of Total	0.0%	24.2%	10.1%	61.3%	0.0%	4.3%	100.0%	

Aqua Indiana, Inc. - Aboite Wastewater Division
Cause No. 44752 26-May-16
Force Main Inventory by Wastewater Treatment Plant Service Area (OUCC DR 4-4)

C. Combined WWTP – Force Main Length (feet) by Pipe Diameter and Type

Force Main Dia. (inches)	Cast Iron	Ductile Iron	PVC	HDPE	Other (please specify type)	Other Asb, Cement	Total Length (feet)	% of Total
1.5	0	0	0	196	0	0	196	0.1%
2	0	0	2,020	24,414	0	0	26,434	19.0%
3	0	0	0	2,258	0	0	2,258	1.6%
4	0	3,814	10,009	1,000	0	1,136	15,959	11.5%
6	0	0	5,220	5,917	0	4,034	15,171	10.9%
8	0	0	6,178	1,580	0	0	7,758	5.6%
10	0	0	3,050	5,558	0	0	8,608	6.2%
12	0	0	0	7,566	0	0	7,566	5.4%
14	0	0	0	4,200	0	0	4,200	3.0%
15	0	0	0	0	0	0	0	0.0%
16	0	0	0	24,577	0	0	24,577	17.7%
18	0	0	26,400	0	0	0	26,400	19.0%
21	0	0	0	0	0	0	0	0.0%
24	0	0	0	0	0	0	0	0.0%
Total	0	3,814	52,877	77,266	0	5,170	139,127	100.0%
% of Total	0.0%	2.7%	38.0%	55.5%	0.0%	3.7%	100.0%	

Aqua Indiana, Inc. - Aboite Wastewater Division
Cause No. 44752 26-May-16
Gravity Sewer Inventory by Wastewater Treatment Plant Service Area (OUCC DR 4-4)

A. Main Aboite WWTP - Gravity Sewer Length (feet) by Pipe Diameter and Type

Gravity Sewer Dia. (inches)	PVC Truss	Clay	PVC	Asbestos Cement	Plain Conc.	Reinf. Concrete RCP	Other CIPP/DIP	Total Length (feet)	% of Total
4	NA					NA		0	0.0%
6	NA	880	1,520			NA		2,400	0.3%
8	18,344	61,362	507,738	74,540		NA	4,543	666,527	78.6%
10		4,021	36,262	1,912		110		42,305	5.0%
12		4,639	47,014	4,553			632	56,838	6.7%
14				1,713				1,713	0.2%
15			39,395	2,518				41,913	4.9%
16			758					758	0.1%
18	NA		14,010	4,180		10,063		28,253	3.3%
21	NA		4,310					4,310	0.5%
24	NA						2,559	2,559	0.3%
27	NA							0	0.0%
30	NA						50	50	0.0%
33	NA		NA	NA				0	0.0%
36	NA							0	0.0%
39	NA		NA	NA	NA	NA		0	0.0%
42	NA			NA	NA			0	0.0%
48	NA	NA		NA	NA			0	0.0%
Total	18,344	70,902	651,007	89,416	0	10,173	7,784	847,626	100.0%
% of Total	2.2%	8.4%	76.8%	10.5%	0.0%	1.2%	0.9%	100.0%	

Aqua Indiana, Inc. - Aboite Wastewater Division
Cause No. 44752 26-May-16
Gravity Sewer Inventory by Wastewater Treatment Plant Service Area (OUCC DR 4-4)

B. Midwest WWTP - Gravity Sewer Length (feet) by Pipe Diameter and Type

Gravity Sewer Dia. (inches)	PVC Truss	Clay	PVC	Asbestos Cement	Plain Conc.	Reinf. Concrete RCP	Other CIPP/HDPE	Total Length (feet)	% of Total
4	NA					NA		0	0.0%
6	NA		590			NA		590	0.3%
8	441	14,021	110,393	1,093		NA	4,594	130,542	66.8%
10		1,024	8,511					9,535	4.9%
12		1,848	14,236	2,022			1,543	19,649	10.1%
14								0	0.0%
15		670	17,381	1,091				19,142	9.8%
16							3,883	3,883	2.0%
18	NA		7,380				10	7,390	3.8%
21	NA							0	0.0%
24	NA		4,421					4,421	2.3%
27	NA							0	0.0%
30	NA							0	0.0%
33	NA		NA	NA				0	0.0%
36	NA						256	256	0.1%
39	NA		NA	NA	NA	NA		0	0.0%
42	NA			NA	NA			0	0.0%
48	NA	NA		NA	NA			0	0.0%
Total	441	17,563	162,912	4,206	0	0	10,286	195,408	100.0%
% of Total	0.2%	9.0%	83.4%	2.2%	0.0%	0.0%	5.3%	100.0%	

Aqua Indiana, Inc. - Aboite Wastewater Division
Cause No. 44752 26-May-16
Gravity Sewer Inventory by Wastewater Treatment Plant Service Area (OUCC DR 4-4)

C. Combined WWTP - Gravity Sewer Length (feet) by Pipe Diameter and Type

Gravity Sewer Dia. (inches)	PVC Truss	Clay	PVC	Asbestos Cement	Plain Conc.	Reinf. Concrete RCP	Other CIPP/DIP	Total Length (feet)	% of Total
4	NA					NA		0	0.0%
6	NA	880	2,110			NA		2,990	0.3%
8	18,785	75,383	618,131	75,633		NA	9,137	797,069	76.4%
10		5,045	44,773	1,912		110		51,840	5.0%
12		6,487	61,250	6,575			2,175	76,487	7.3%
14				1,713				1,713	0.2%
15		670	56,776	3,609				61,055	5.9%
16			758				3,883	4,641	0.4%
18	NA		21,390	4,180		10,063	10	35,643	3.4%
21	NA		4,310					4,310	0.4%
24	NA		4,421				2,559	6,980	0.7%
27	NA							0	0.0%
30	NA						50	50	0.0%
33	NA		NA	NA				0	0.0%
36	NA						256	256	0.0%
39	NA		NA	NA	NA	NA		0	0.0%
42	NA			NA	NA			0	0.0%
48	NA	NA		NA	NA			0	0.0%
Total	18,785	88,465	813,919	93,622	0	10,173	18,070	1,043,034	100.0%
% of Total	1.8%	8.5%	78.0%	9.0%	0.0%	1.0%	1.7%	100.0%	

Aqua Indiana, Inc. - Aboite Wastewater Division
Cause No. 44752

Lift Station Inventory

Lift Station Name	Triad Assoc. Master Plan 1998 Lift Station No.	Greeley & Hansen 2016 Lift Station No.	Notes
Aboite Meadows No. 2 (Old)	2	10	
Lantern Trail	3		Removed
Inverness Hills	4	29	
Covington Lake	5		Removed
Covington Lake Estates	6	7	
Graham McCulloch	7		Removed
Devil's Hollow	8	16	
Covington Club	9	32	
Dupont Road	10	North System	To FWCU
Ellisville	11	21	
Scotia	12	12	
Redwood	13	North System	To FWCU
Homestead	14		Removed
West Hamilton Road	15	19	
Millers Manor	16		Removed
Quail Hollow	17	13	
Sycamore Hills	18	4	
Indian Creek	19	17	
Emerald Lake	20	6	
Hamlets	21	20	
Bluewater	22	3	
Bittersweet Woods	29	23	
Brierwood	30	30	
Covington Co. Line	31		Removed
Highlands of Scotia	32	11	
Hunt Club	33		Removed
Grayfox	34	22	
Barrington Woods	40		Removed
Covington Bluffs	42	31	
Glens of Bittersweet	43	18	
Sleepy Hollow	44		Removed
Peddler's Ford	46	15	
Shorewood	47	28	
Brigadoon	48	14	
Bridgewater	50		Removed
Walnut Creek	51		Removed

Aqua Indiana, Inc. - Aboite Wastewater Division
Cause No. 44752

Lift Station Inventory

Lift Station Name	Triad Assoc. Master Plan 1998 Lift Station No.	Greeley & Hansen 2016 Lift Station No.	Notes
Lima Valley		North System	To FWCU
Aboite Center Road	Did not exist	8	
Aboite Meadows No. 1 (New)	Did not exist	9	
Amber Highlands	Did not exist	1	
Bass Road	Did not exist	27	
Braemer	Did not exist	5	
Goldspur	Did not exist	34	
Liberty Mills	Did not exist	24	
Micropulse	Did not exist	26	
Waterside Woods	Did not exist	33	
Westfield Passage	Did not exist	2	
Deerfield Homestead	Did not exist	25	

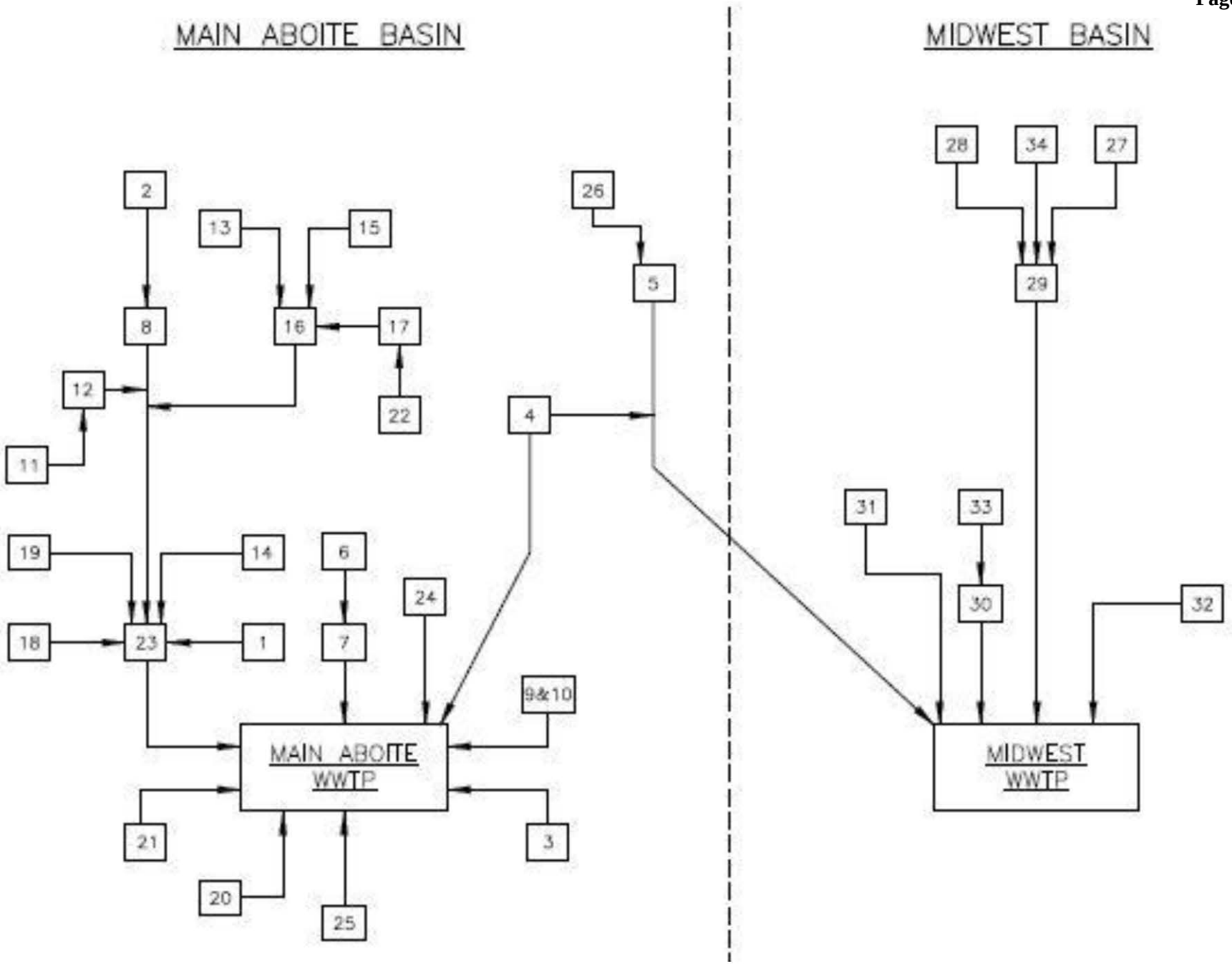

Aqua Indiana, Inc. – Aboite Wastewater Division - 2016 Lift Station Inventory (Greeley and Hansen LS #s)