NATIONAL ENERGY TECHNOLOGY LABORATORY

Indiana Carbon Capture & Sequestration Summit

September 3-4, 2008
Indianapolis, Indiana

Carbon Capture Technology Options and Costs

Jared Ciferno
Office of Systems, Analysis and Planning

Topics

CO_2 Capture Applied To……..

- **<u>New</u> Coal-fired Power Plants**
  - IGCC → Pre-combustion CO_2 Capture
  - PC → Post-combustion CO_2 Capture

- **<u>Existing</u> Pulverized Coal Power Plants**
  - Post-combustion CO_2 Capture

National Energy Technology Laboratory

- **Only DOE national lab dedicated to fossil energy**
  - Fossil fuels provide 85% of U.S. energy supply
- **One lab, five locations, one management structure**
- **1,200 Federal and support-contractor em**
- **Research spans fundamental science to technology demonstrations**

Alaska

Oklahoma

Oregon

Pennsylvania

West Virginia

Coal-fired Generation CO_2 Forecast

AEO'07 Reference Case

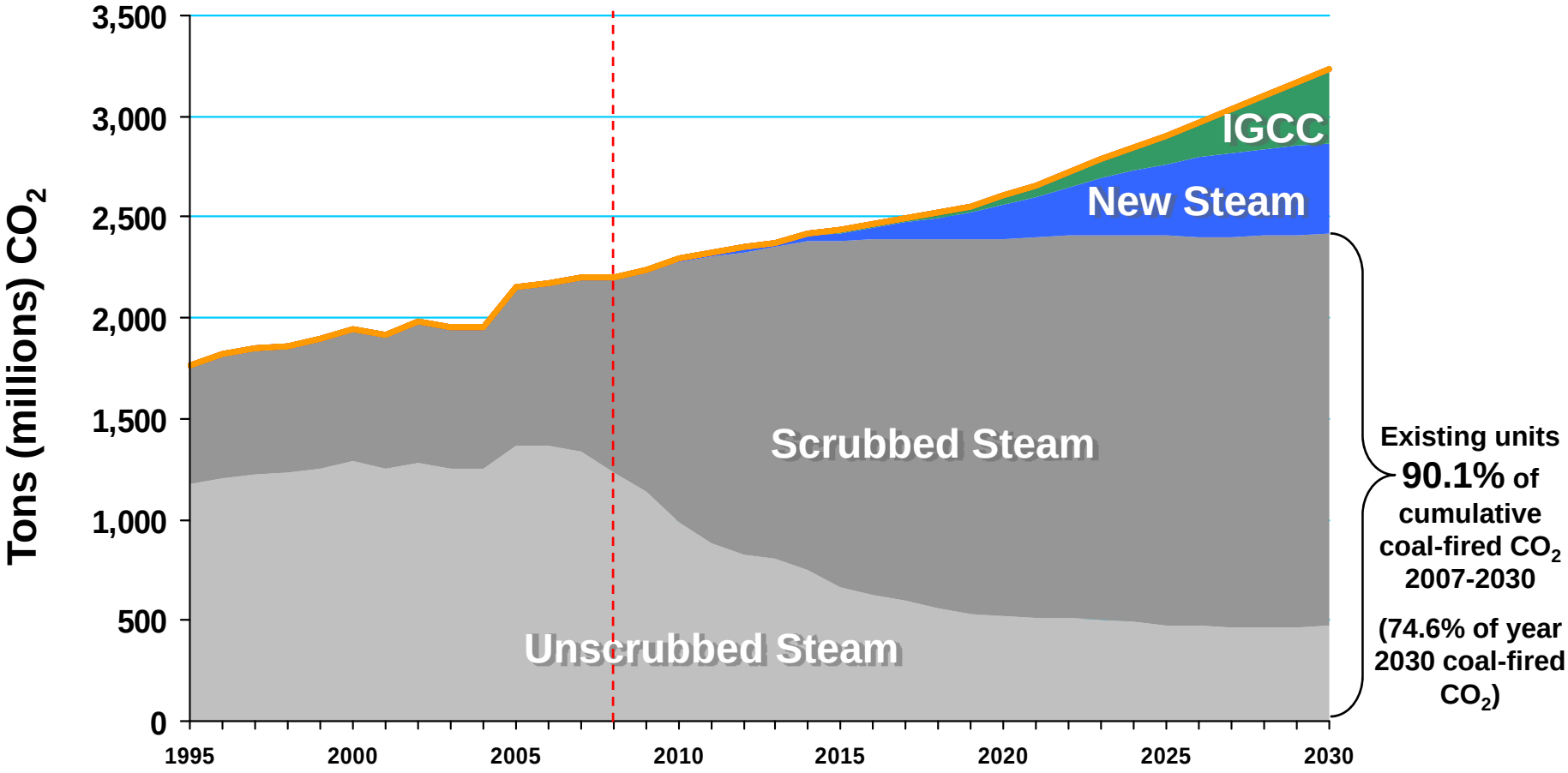

Large Proportion of Total Coal-fired CO_2 From Existing Plants

CO_2 Capture Technology Options

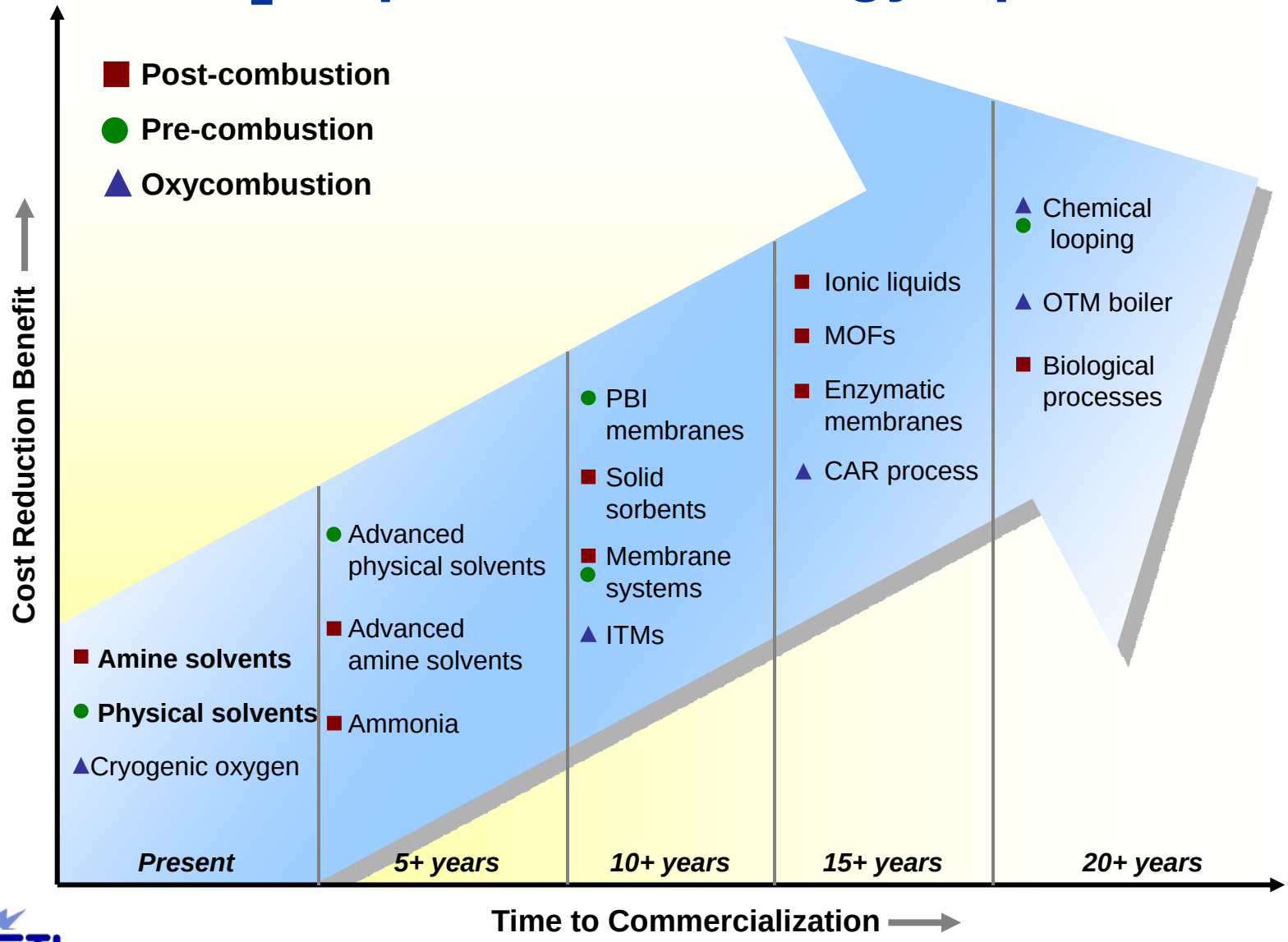

Power Plant Cost Trends

- **Power plant construction costs have risen at rates greater than that of inflation in past few years**

- **Why?**
  - Global demand for electricity infrastructure-related items
  - High fuel and labor prices
  - High raw material prices

- **Expected to worsen**

CERA Power Capital Cost Index (PCCI)

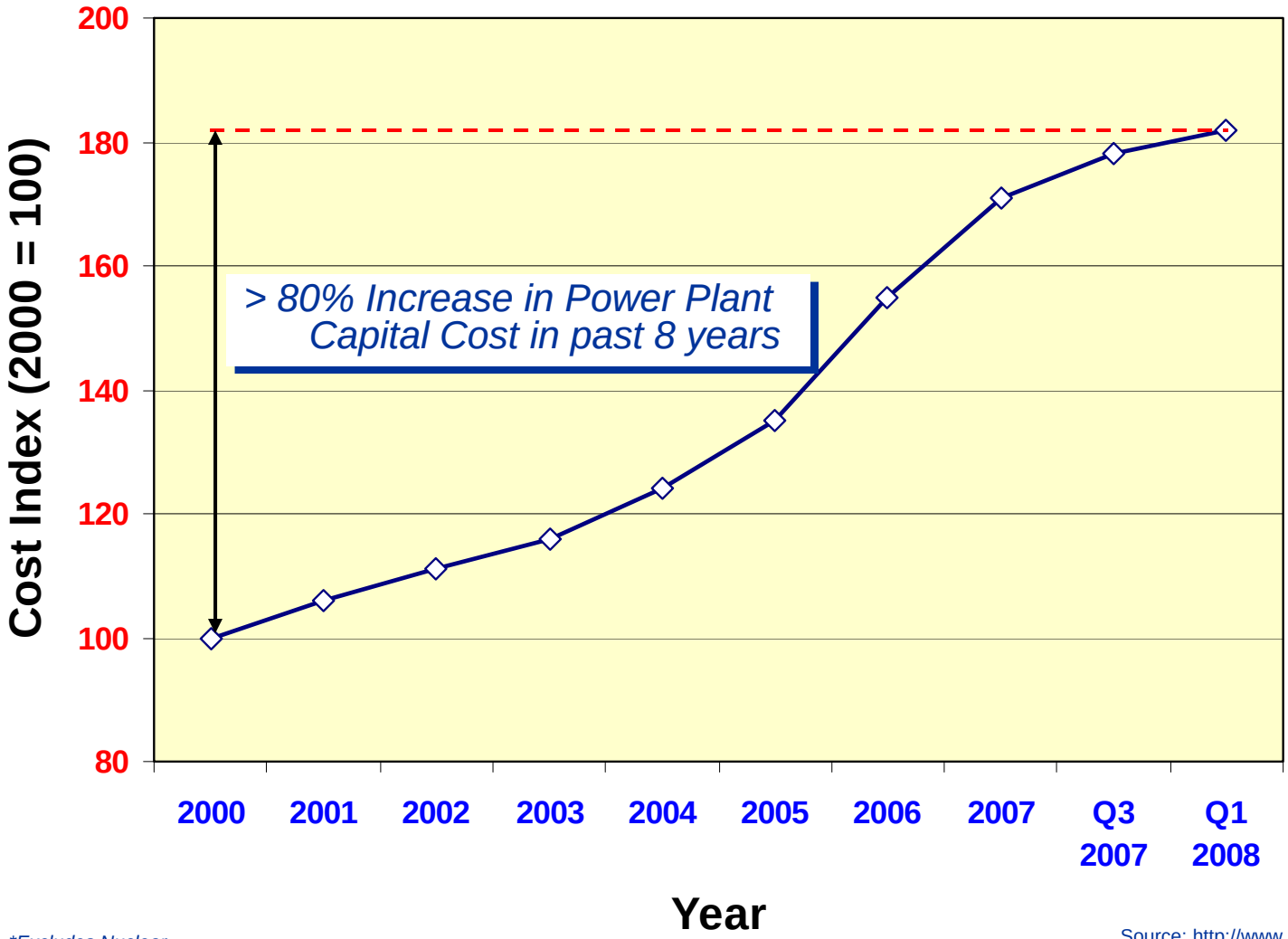

*Excludes Nuclear

Source: http://www.ihsindexes.com/

New IGCC

With and Without CO_2 Capture

New IGCC Power Plant

No CO_2 Capture

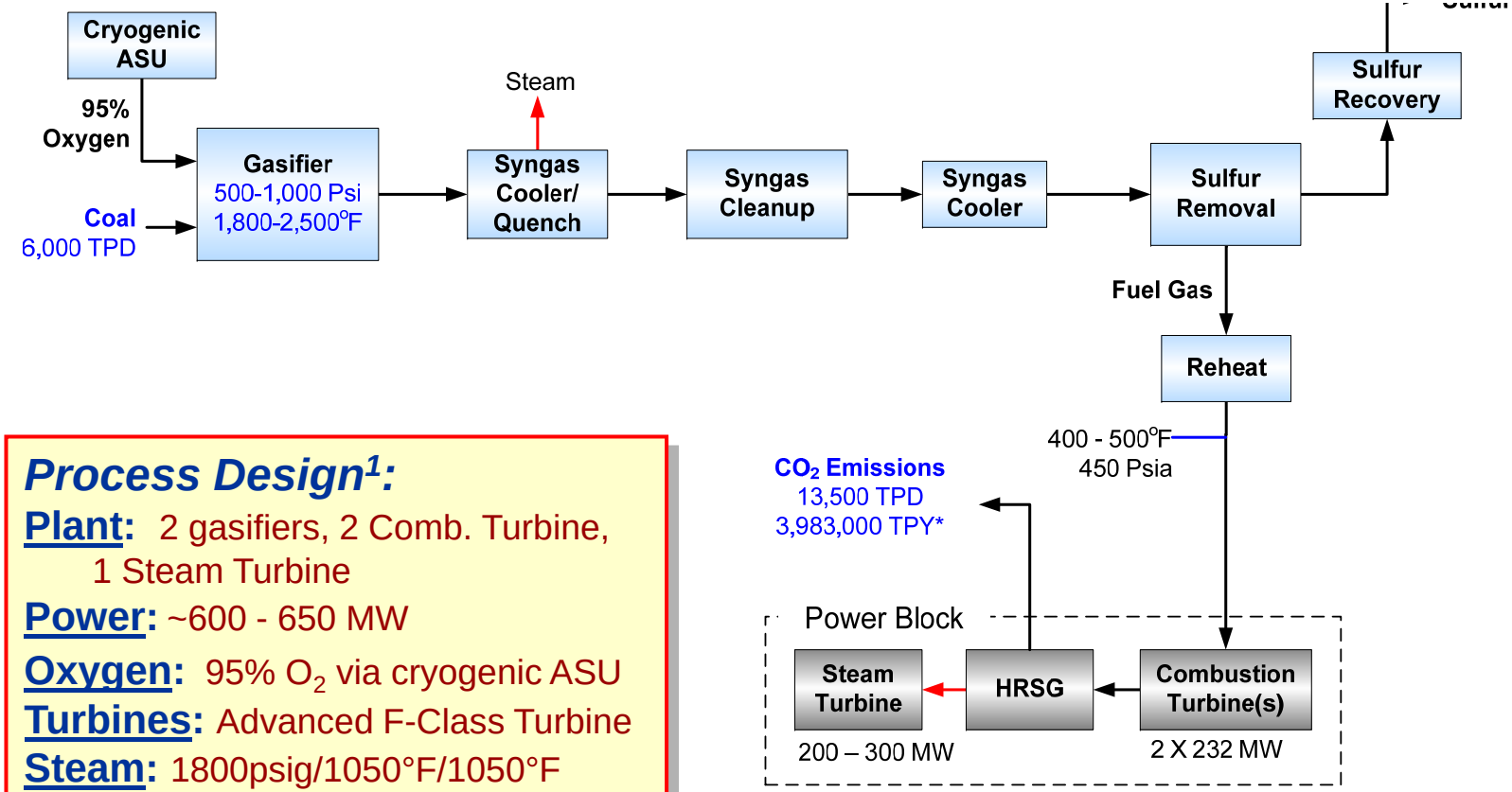

Process Design[1]:

Plant: 2 gasifiers, 2 Comb. Turbine, 1 Steam Turbine

Power: ~600 - 650 MW

Oxygen: 95% O_2 via cryogenic ASU

Turbines: Advanced F-Class Turbine

Steam: 1800psig/1050°F/1050°F

[1]See Appendix for further design conditions: Coal type, Plant Location, Financial Criteria, etc.

TPD: Short Ton per Day
TPY: Short Ton per Year (at 80% Capacity Factor)

References: Cost and Performance Baseline for Fossil Energy Power Plants--Volume 1 Bituminous Coal to Electricity, U.S. Department of Energy/National Energy Technology Laboratory, Final Report, May 2007

New IGCC Power Plant
With Selexol™ CO_2 Scrubbing

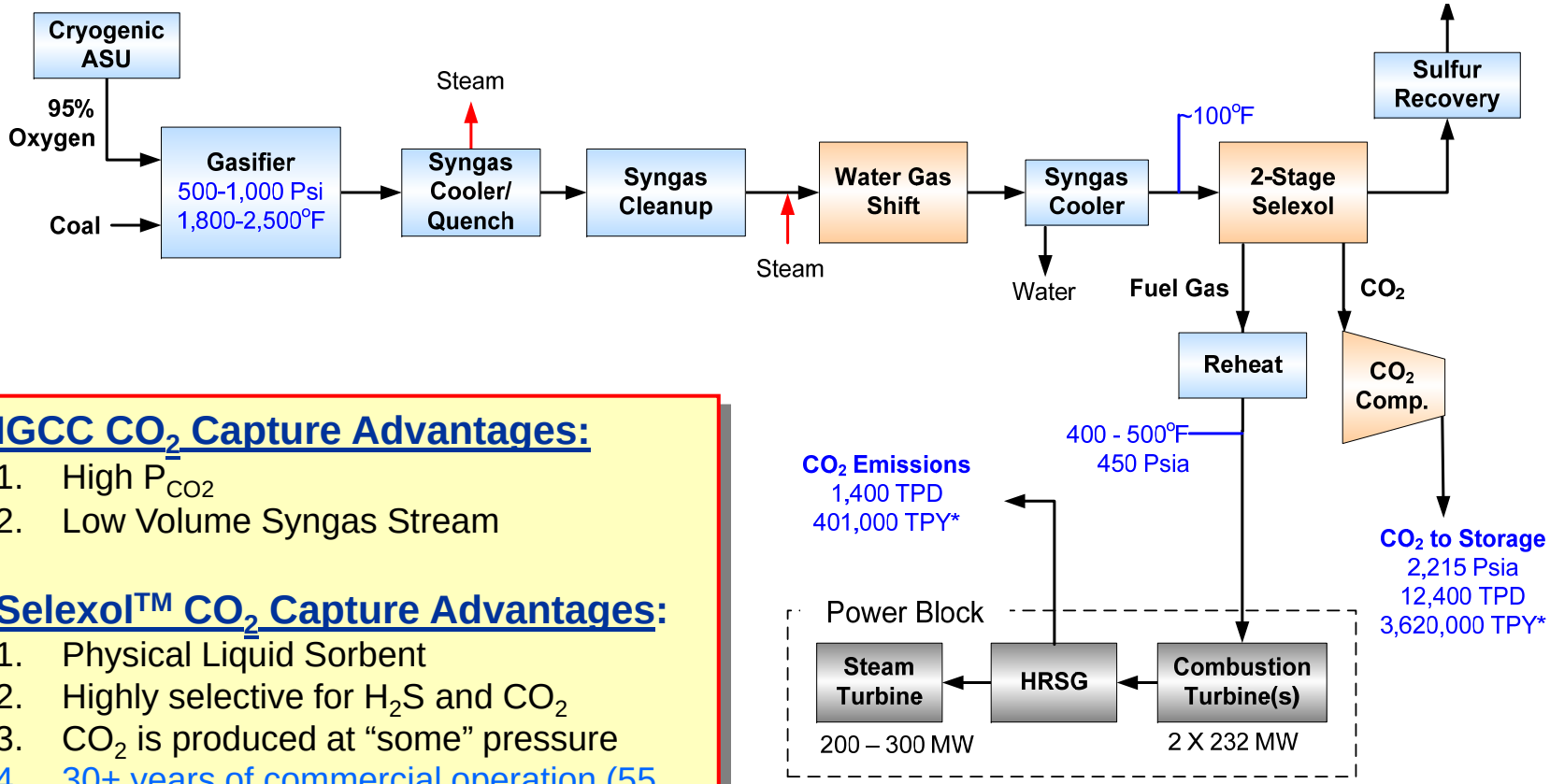

IGCC CO_2 Capture Advantages:

1. High P_{CO2}
2. Low Volume Syngas Stream

Selexol™ CO_2 Capture Advantages:

1. Physical Liquid Sorbent
2. Highly selective for H_2S and CO_2
3. CO_2 is produced at "some" pressure
4. 30+ years of commercial operation (55 worldwide plants)

[1]See Appendix for further design conditions: Coal type, Plant Location, Financial Criteria, etc.

TPD: Short Ton per Day
TPY: Short Ton per Year (at 80% Capacity Factor)

References: Cost and Performance Baseline for Fossil Energy Power Plants--Volume 1 Bituminous Coal to Electricity, U.S. Department of Energy/National Energy Technology Laboratory, Final Report, May 2007

New IGCC Efficiency

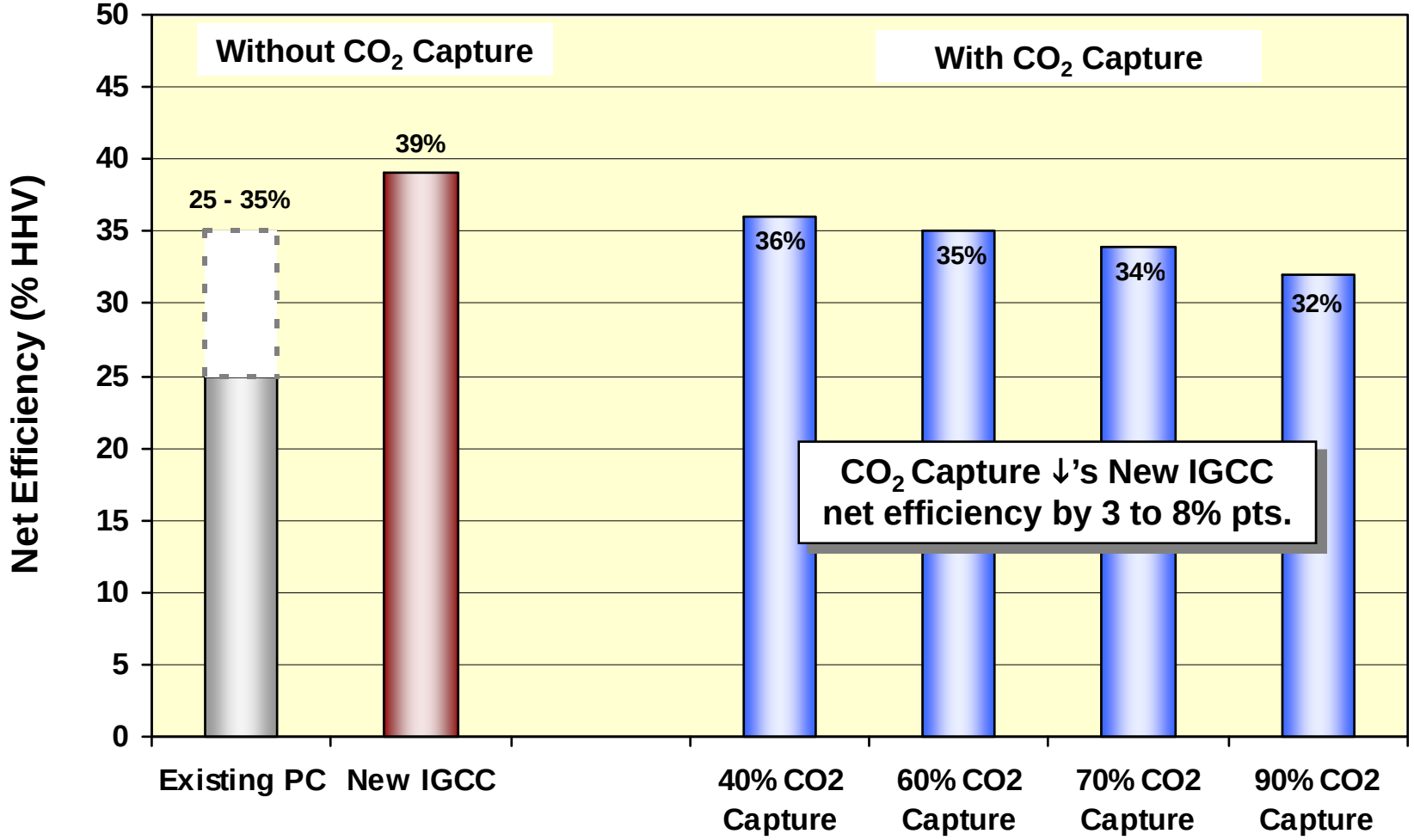

References: Cost and Performance Baseline for Fossil Energy Power Plants--Volume 1 Bituminous Coal to Electricity, U.S. Department of Energy/National Energy Technology Laboratory, Final Report, May 2007
Evaluation of Alternate Water Gas Shift Configurations for IGCC Systems, Draft Internal Report,, December 2007

New IGCC Cost of Electricity

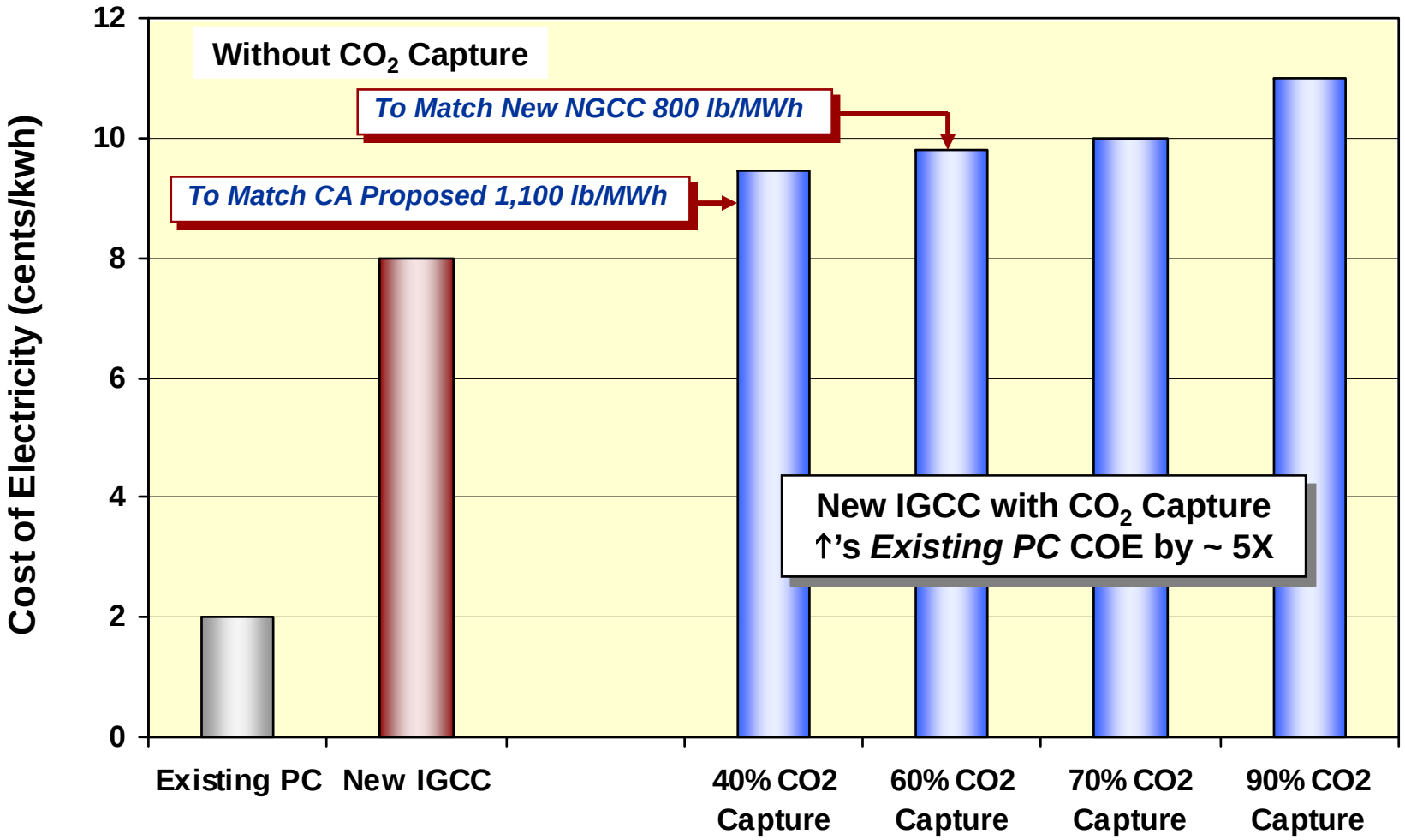

References: Cost and Performance Baseline for Fossil Energy Power Plants--Volume 1 Bituminous Coal to Electricity, U.S. Department of Energy/National Energy Technology Laboratory, Final Report, May 2007
Evaluation of Alternate Water Gas Shift Configurations for IGCC Systems, Draft Internal Report,, December 2007

New Pulverized Coal

With and Without CO_2 Capture

New Supercritical PC Power Plant

No CO_2 Capture

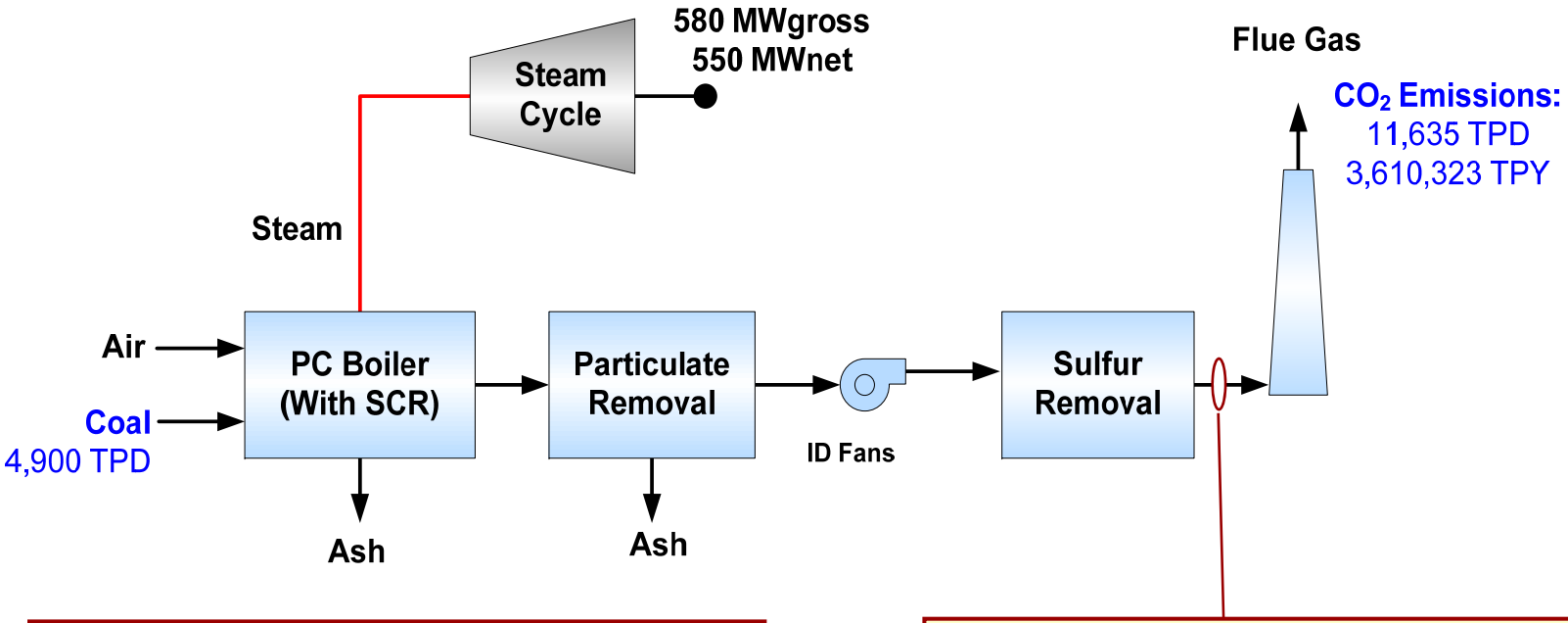

Process Design:

Steam: 3500 psig/1110°F/1150°F

NOx: LNB, OFA and SCR

SOx: Wet limestone FGD

PM: Baghouse

CO_2 Capture Challenges:

Low Pressure: 14.8

Low Concentration: 13% volume

TPD: Short Ton per Day
TPY: Short Ton per Year

Reference: Pulverized Coal Oxycombustion Power Plants—Volume 1 Bituminous Coal to Electricity, U.S. Department of Energy/National Energy Technology Laboratory, Revision 2 Final Report, August 2008

New Supercritical PC Power Plant
Amine Scrubbing CO_2 Capture

Process Design:

CO_2 Capture: 30-90%, compressed to 2,215 psia

Balance of Plant: Oversized to maintain 550 MW net

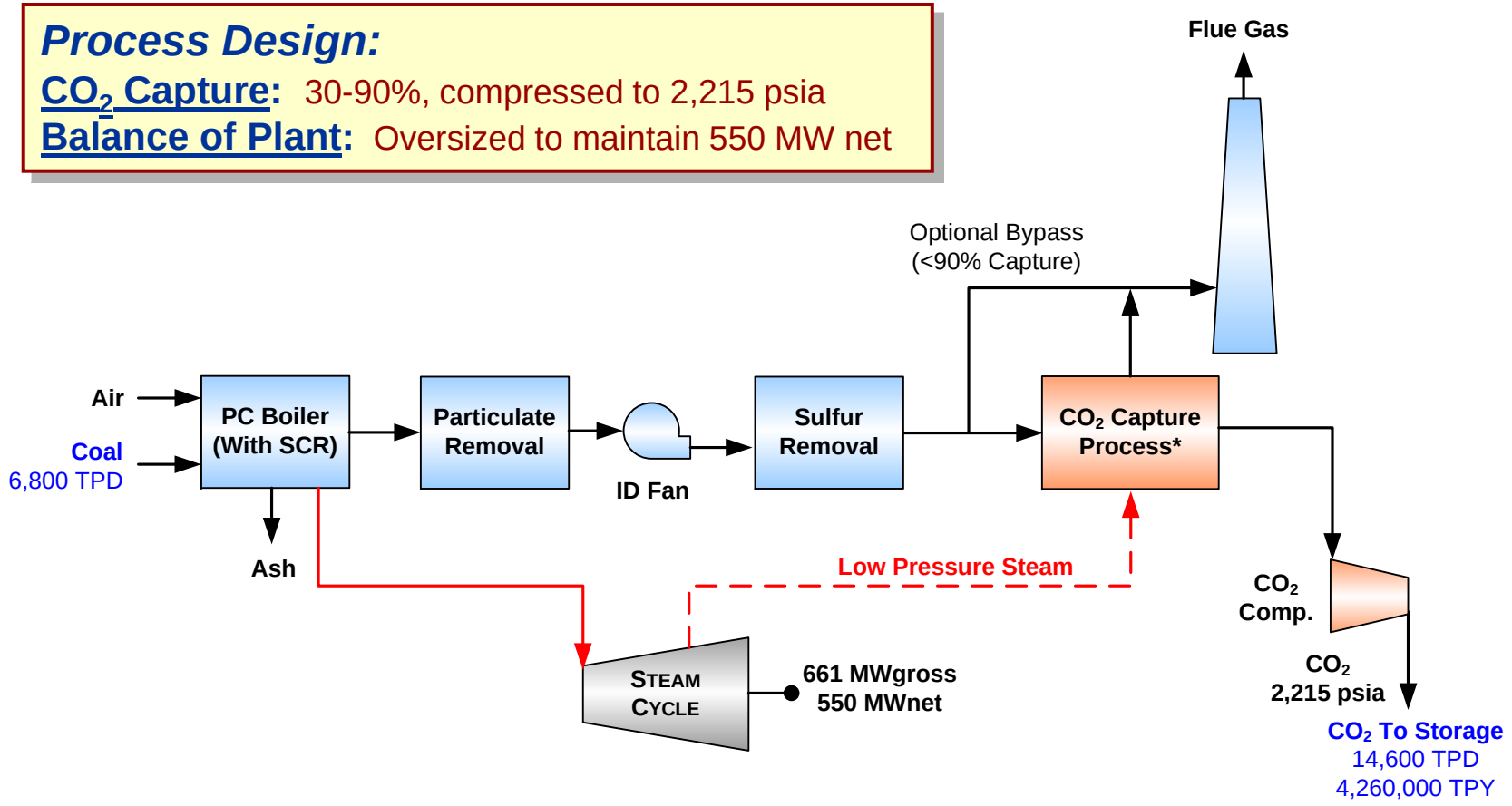

**CO2 Capture Process Flow Diagram in Appendix*

TPD: Short Ton per Day
TPY: Short Ton per Year

Reference: Pulverized Coal Oxycombustion Power Plants—Volume 1 Bituminous Coal to Electricity, U.S. Department of Energy/National Energy Technology Laboratory, Revision 2 Final Report, August 2008

Alkanolamines for Acid Gas Removal

1. Developed in 1930
   - Triethanolamine (TEA), first commercially available, used in gas treating (H_2S and CO_2 removal)
   - TEA replaced by amine mixtures (MEA, DEA, MDEA) in the 1950's
2. 2005—Various proprietary formulations offered by: Fluor Daniel, Dow Chemical, UOP/Union Carbide, Huntsman Corp., BASF, EXXON, MHI, Coastal and others.

Advantages

1. **Proven Technology → Remove CO_2 and H_2S from NG**
2. **Chemical solvent → *High* loadings at *low* CO_2 partial pressure**
3. **Relatively cheap chemical ($2-3/lb)**
4. **Small scale commercial experience**

Disadvantages

1. **High heat of reaction → high regeneration energy required**
2. **Easily degraded by SOx, NOx, PM**
3. **Post-combustion capture (for food grade CO_2) is limited and currently at small scale (<200 TPD)**

Amine Scrubbing Experience

Fluor Econamine FG^{SM} Commercial Plants (2004)

	Owner	Location	Tonne/day	Purpose
1	Liquid Air Australia	Australia	60	Food Industry
2	Liquid Air Australia	Austalia	60	Food Industry
3	Industrial de Gaseouses Cia. Ltda.	Ecuador	6	Food Industry
4	Pepsi Cola	Philippines	6	Food Industry
5	Pepsi Cola	Philippines	6	Food Industry
6	Cosmos Bottling Co.	Philippines	6	Food Industry
7	San Miguel Corporation	Philippines	40	Food Industry
8	Indo Gulf Fertilizer Co. (Feed)	India	150++	Urea Plant
9	Luzhou Natural Gas (Feed)	Sechuan Prov., PRC	160++	Urea Plant
10	Northeast Energy Associates	Mass., USA	320	Food Industry
11	Kansei Electric Power Co.	Japan	2	Pilot Plant
12	Tokyo Electric Power Co.	Japan	5	Pilot Plant
13	Sumitomo Chem/Nippon Oxygen	Japan	150++	Food Industry
14	Cervezaria Baveria	Columbia	25	Food Industry
15	Prosint	Brazil	90 (2 units)++	Food Industry
16	Coca Cola	Egypt	6	Food Industry
17	Azucar Liquida SA	Dom. Republic	6	Food Industry
18	European Drinks Industry	Romania	36	Food Industry
19	Messer Greisheim do Brazil Ltda.	Brazil	50	Food Industry
20	Messer Greisheim do Brazil/SPAL	Brazil	80	Food Industry
21	Grupo Walter	Spain	67	Food Industry
22	Air Products	Singapore	36	Food Industry
		Total	**817**	

Source: *Improvement in Power Generation With Post-Combustion Capture of CO2,* IEA GHG Report Number PH4/33, November 2004

New PC Efficiency

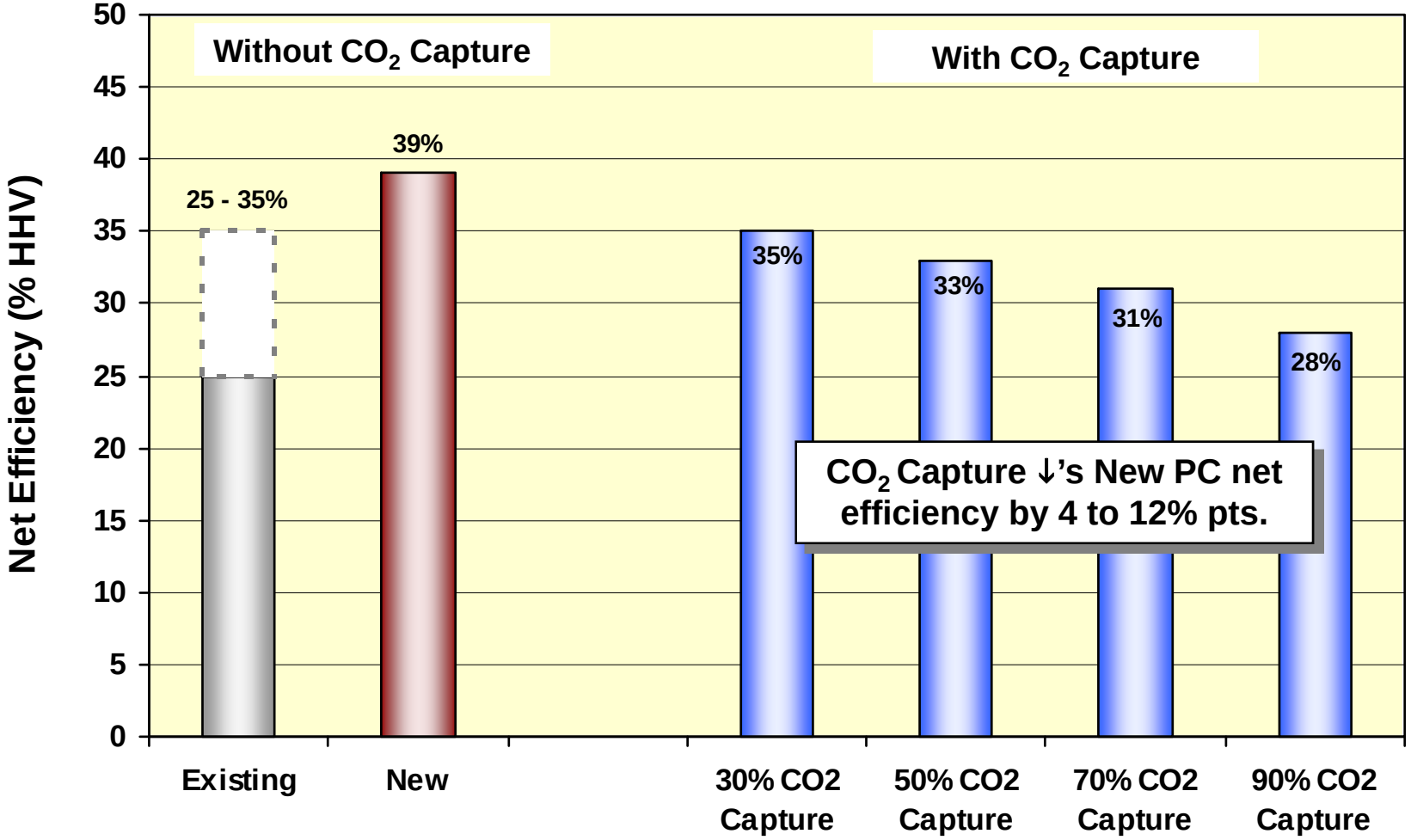

References: Pulverized Coal Oxycombustion Power Plants—Volume 1 Bituminous Coal to Electricity, U.S. Department of Energy/National Energy Technology Laboratory, Revision 2 Final Report, August 2008
Integrated Environmental Control Model 2008

New PC Cost of Electricity

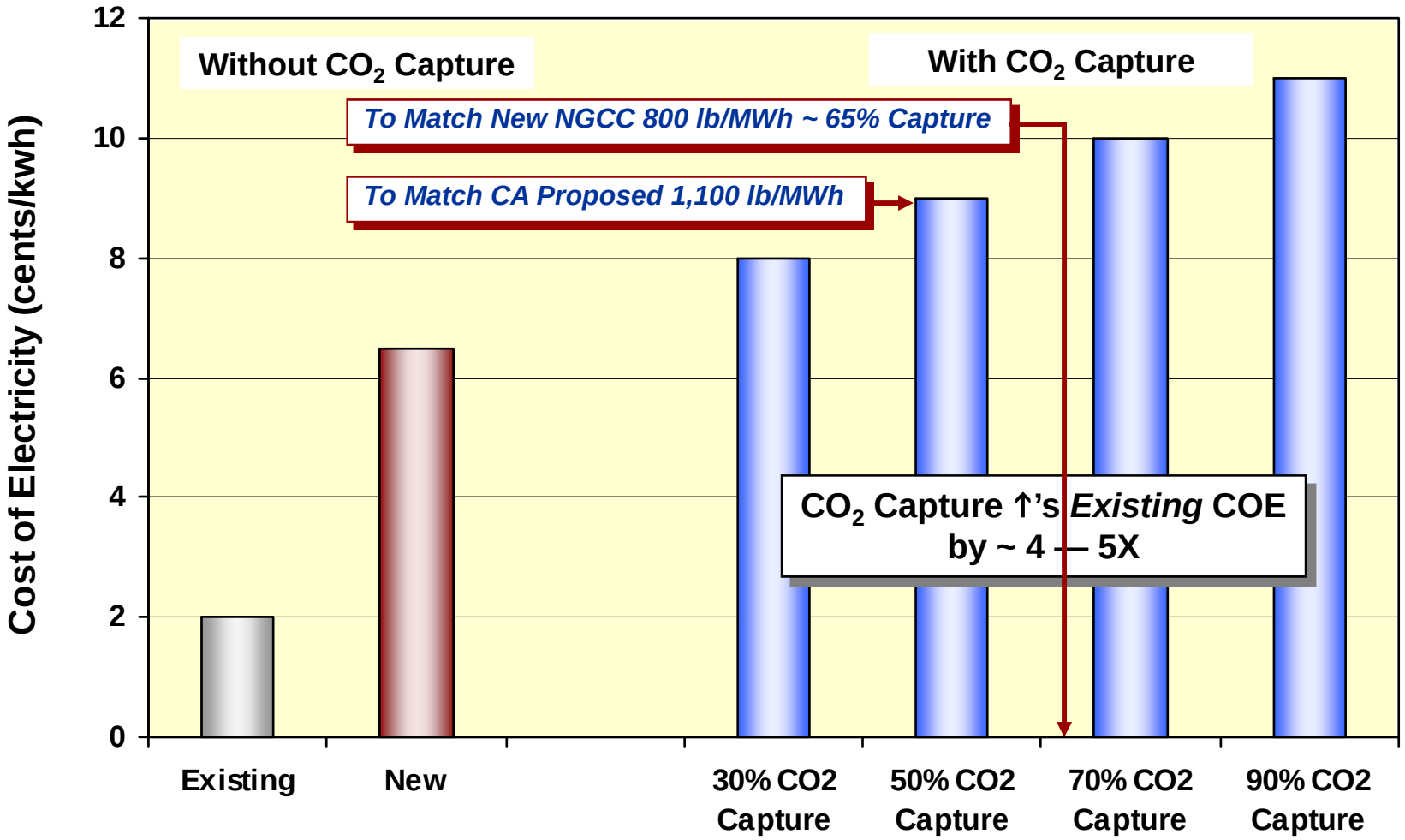

References: Pulverized Coal Oxycombustion Power Plants—Volume 1 Bituminous Coal to Electricity, U.S. Department of Energy/National Energy Technology Laboratory, Revision 2 Final Report, August 2008
Integrated Environmental Control Model 2008

Existing Pulverized Coal

With CO_2 Capture

Key Challenges to PC CO_2 Retrofits

1. Space limitations — acres needed for current scrubbing
2. Major equipment modifications
3. Regeneration steam availability — can steam turbine operate at part load using current scrubbing technology?
4. Sulfur — additional deep sulfur removal required using current CO_2 scrubbing technology
5. Make-up power — satisfy need to maintain baseload output
6. *Water availability
7. *Local storage availability (saline formation, EOR)
8. *Scheduling outages for CO_2 retrofits
9. *Post-retrofit dispatch implications due to increase in COE
10. *Retrofit triggering New Source Review
11. *Proposed legislation

*Analyses on these topics is currently in progress at NETL, beyond the scope of today's presentation

Case Study: AEP Conesville Unit #5

- **Total 6 units = 2,080 MWe**
- **Unit #5:**
  - Subcritical steam cycle (2400psia/1005°F/1005°F)*
  - Constructed in 1976
  - 463 MW gross (~430 MW net)
  - ESP and Wet lime FGD (95% removal efficiency, 104 ppmv)

Mid-western bituminous coal

Ultimate Analysis (wt.%)	**As Rec'd**
Moisture	10.1
Carbon	63.2
Hydrogen	4.3
Nitrogen	1.3
Sulfur	2.7
Ash	11.3
Oxygen	7.1
HHV (Btu/lb)	11,293

Reference: CO2 Capture From Existing Coal-Fired Power Plants, U.S. Department of Energy/National Energy Technology Laboratory, Revised Final Report, November 2007

Existing PC Plant CO_2 Capture Modifications

Conesville Unit #5

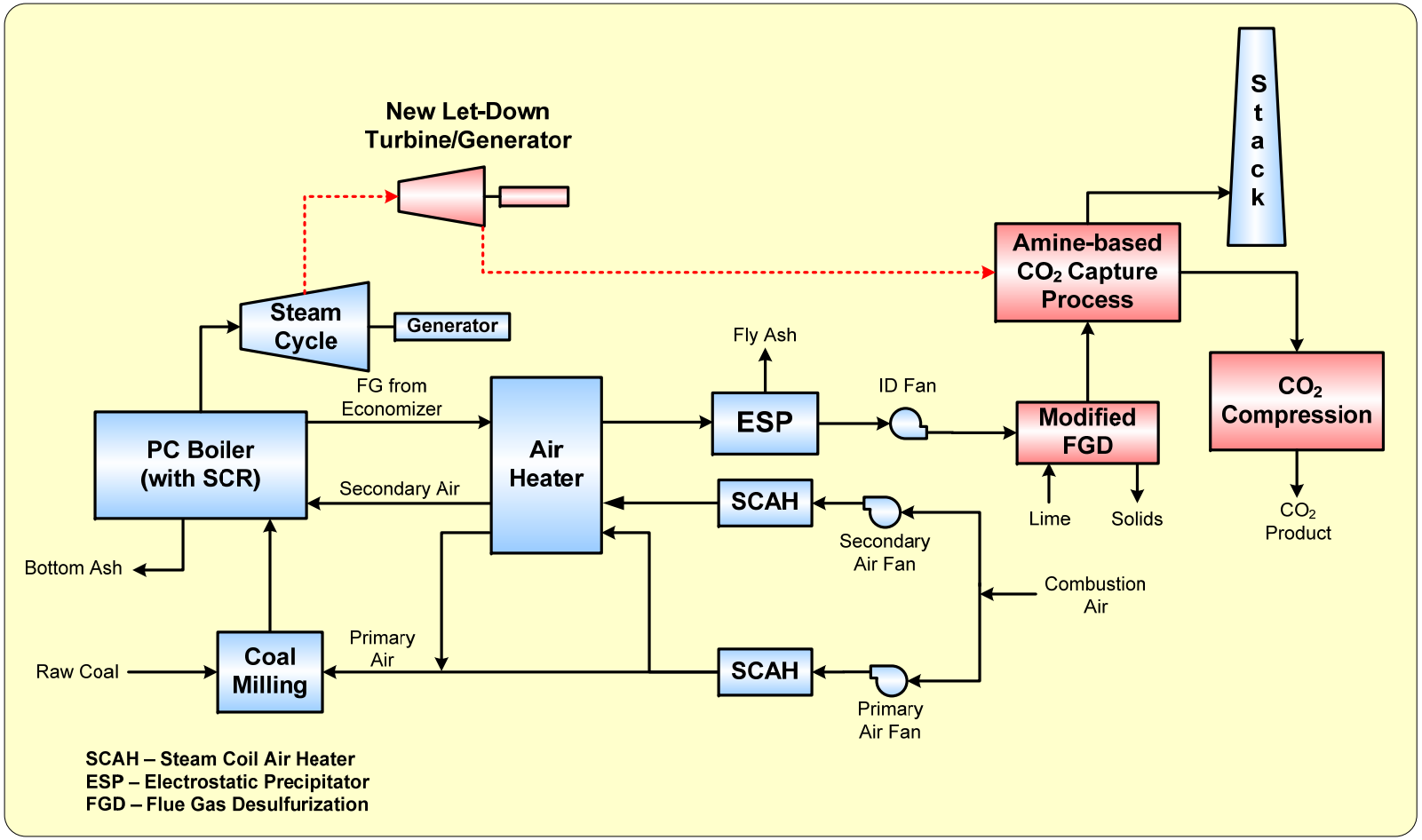

Reference: CO2 Capture From Existing Coal-Fired Power Plants, U.S. Department of Energy/National Energy Technology Laboratory, Revised Final Report, November 2007

Existing PC Efficiency

Same trend as "New Plant"

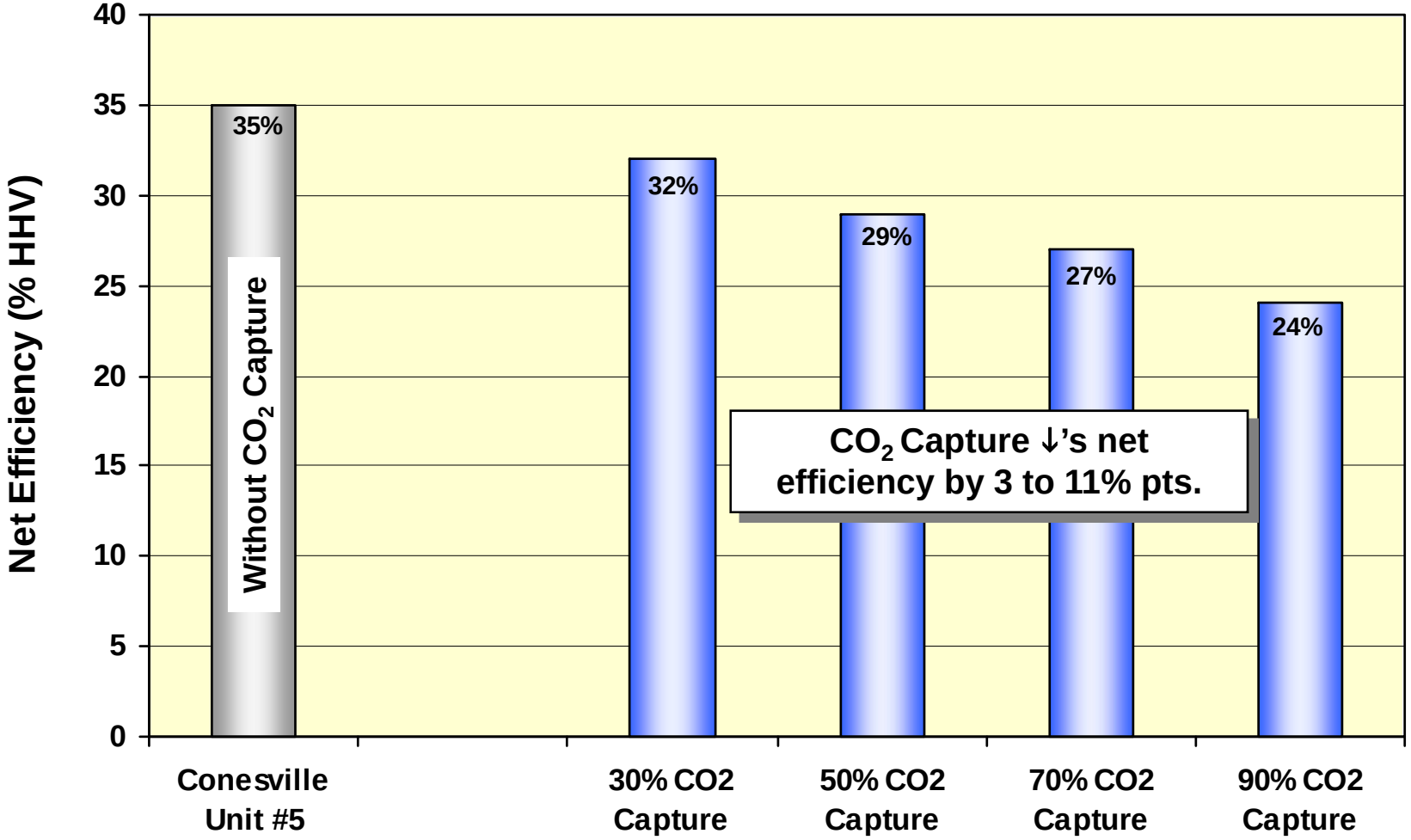

Reference: CO2 Capture From Existing Coal-Fired Power Plants, U.S. Department of Energy/National Energy Technology Laboratory, Revised Final Report, November 2007

Existing PC Base Load Output Impact

Post CO_2 Retrofit Losses to Grid

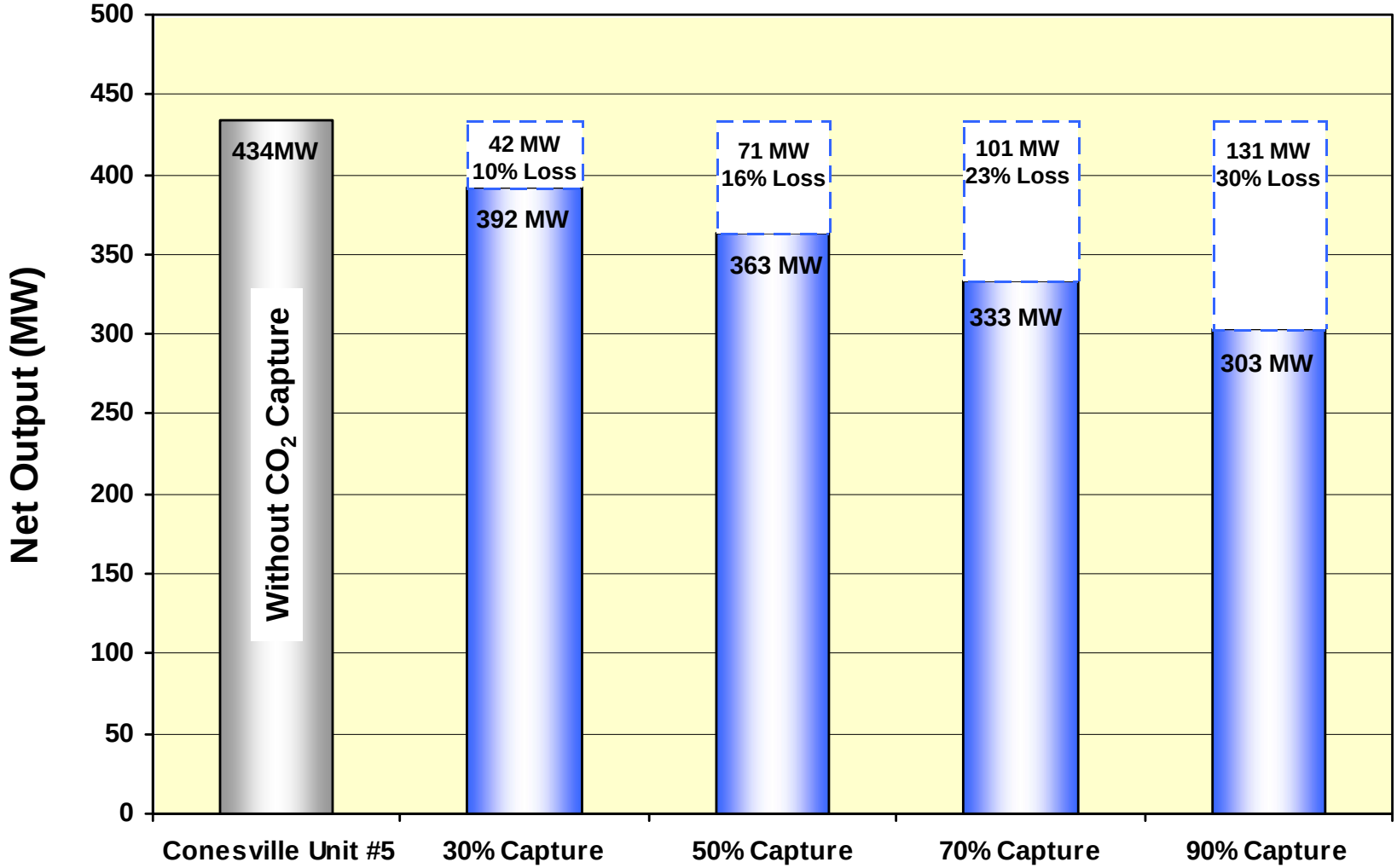

Reference: CO2 Capture From Existing Coal-Fired Power Plants, U.S. Department of Energy/National Energy Technology Laboratory, Revised Final Report, November 2007

Existing PC Cost of Electricity

Existing Fleet Retrofit Advantage!

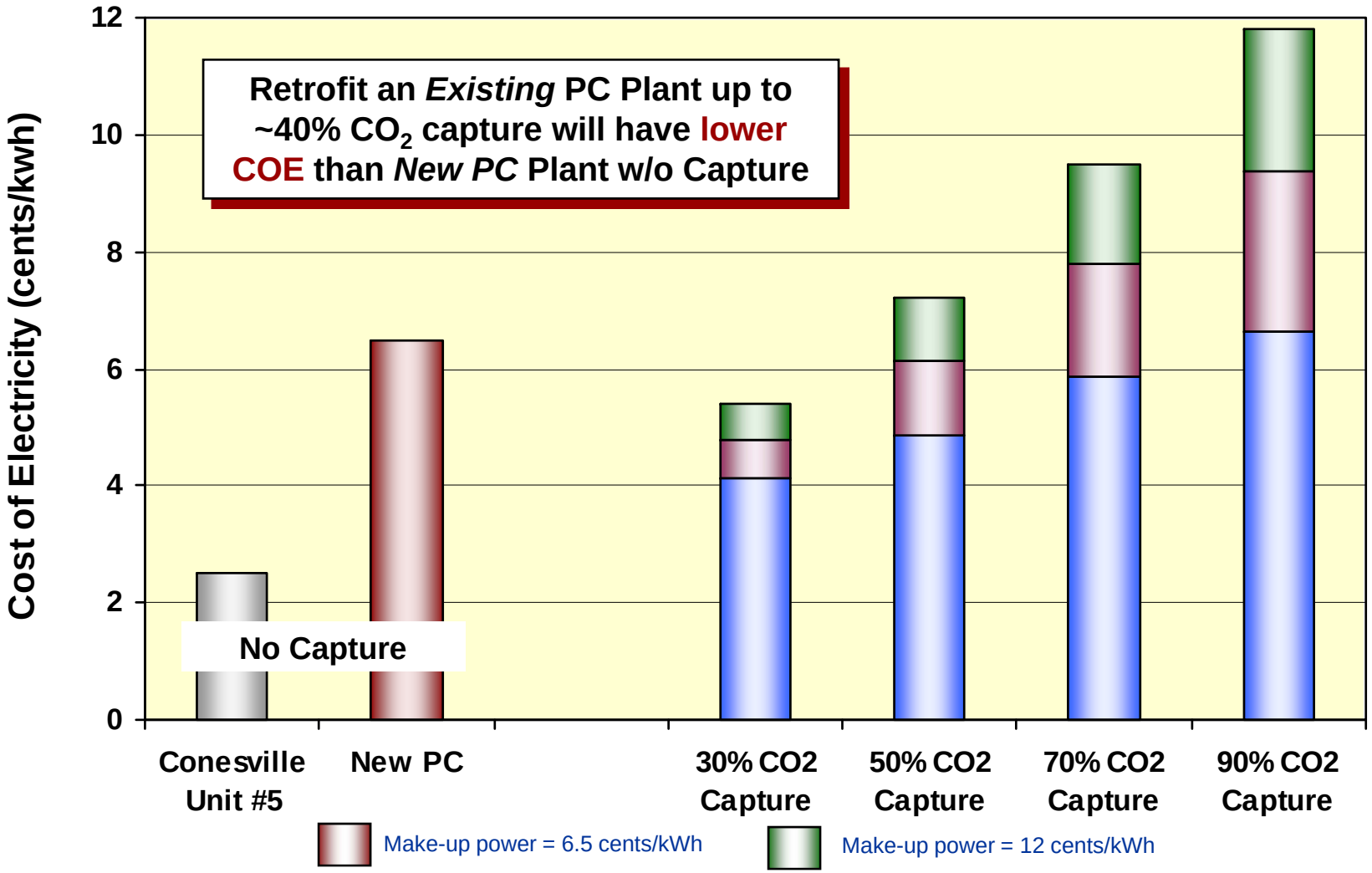

References: Pulverized Coal Oxycombustion Power Plants—Volume 1 Bituminous Coal to Electricity, U.S. Department of Energy/National Energy Technology Laboratory, Revision 2 Final Report, August 2008
Integrated Environmental Control Model 2008

Summary Results Comparison

Power Plant Efficiency Summary

With 90% CO_2 Capture

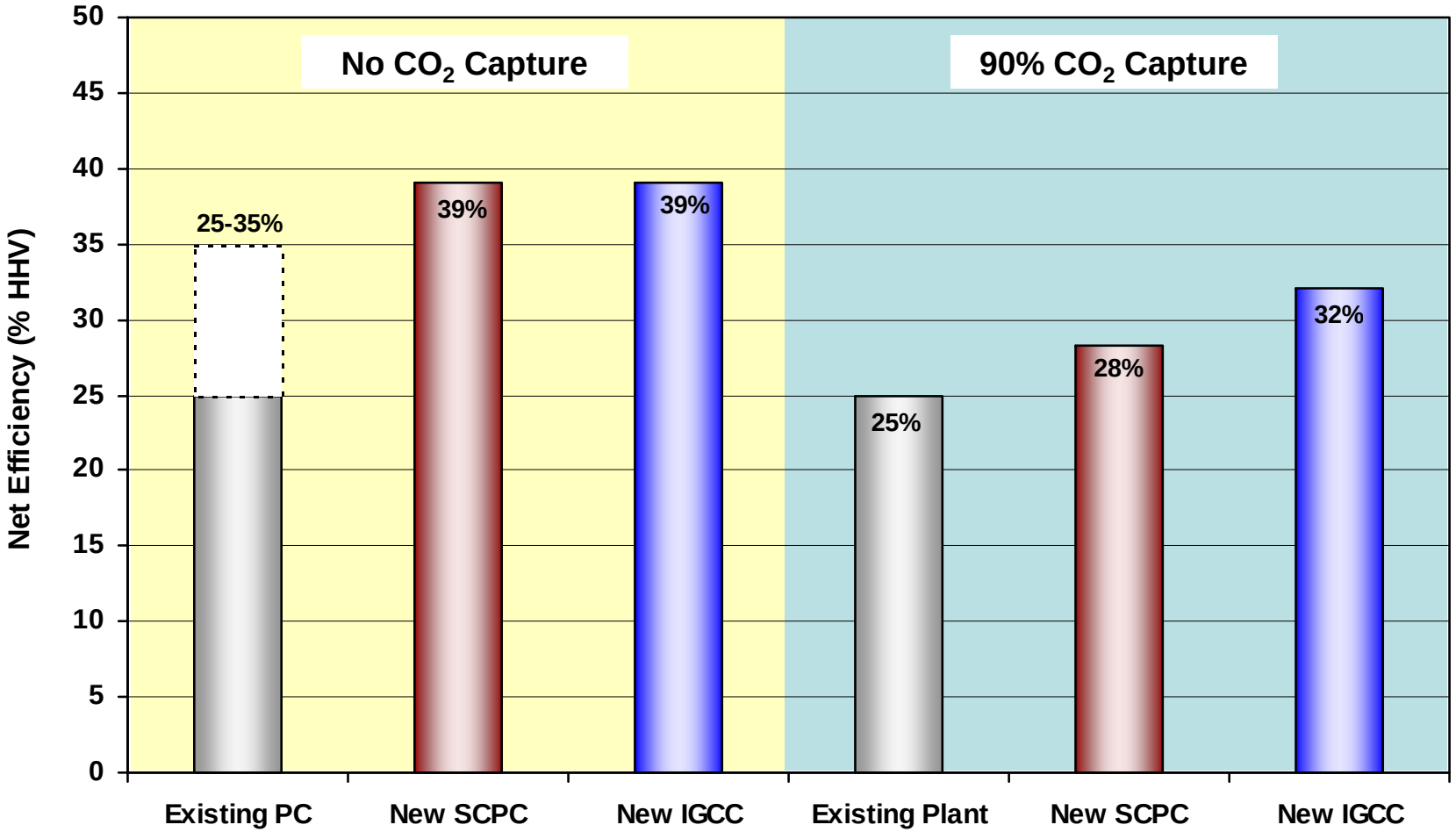

Cost of Electricity Summary

With 90% CO_2 Capture

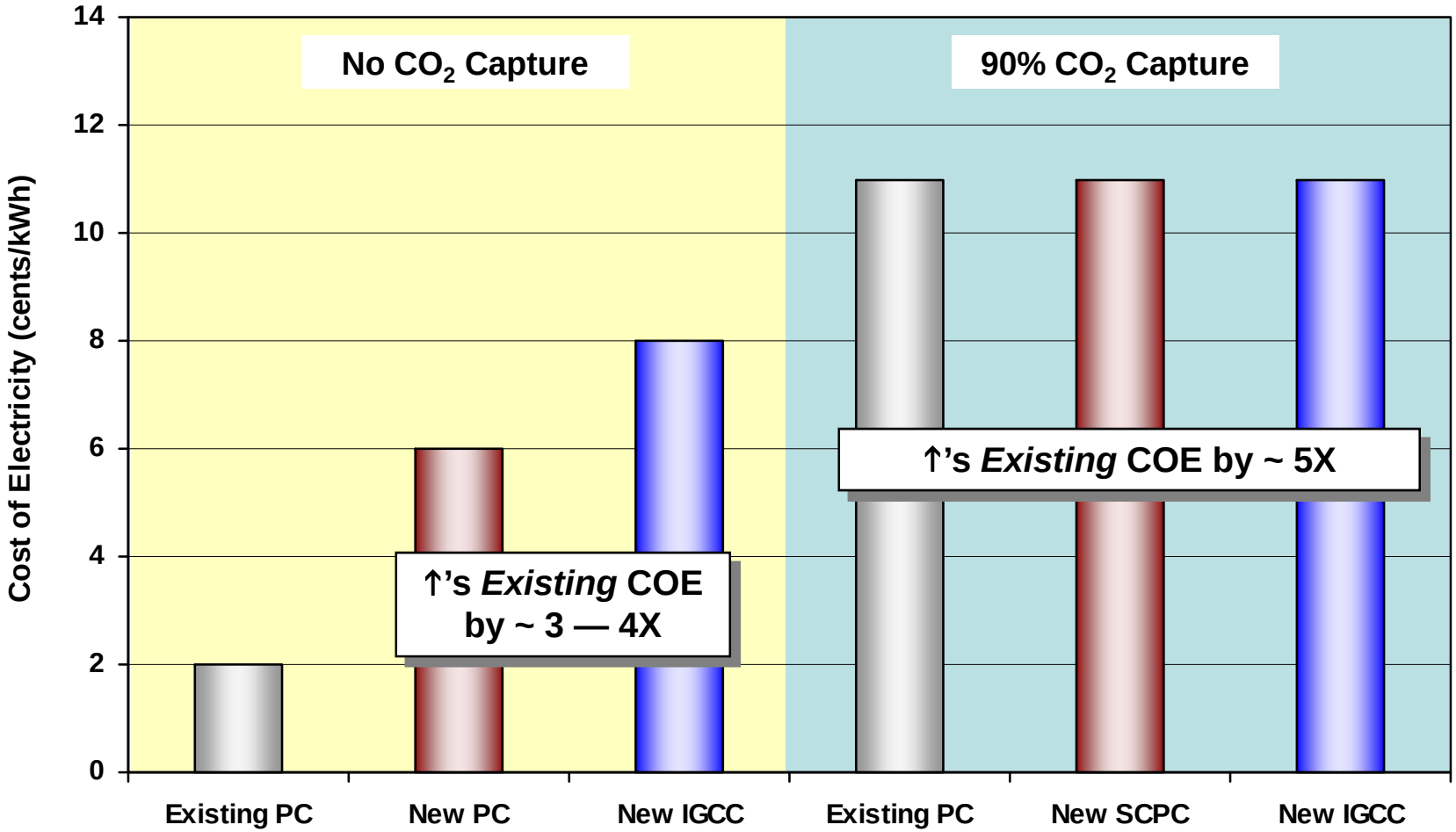

CO_2 Capture Summary

1. **New Integrated Gasification Combined Cycle**
   - *For a 600 MW plant, @90% Capture 13,000 TPD or 3.6MM TPY removed*
   - *One current state-of-the-art technology option is Selexol™*
   - *CO_2 Capture "Parasitic Load" ↓'s net efficiency by 3 - 8% points*
   - *Cost of electricity 4 - 5X Existing average pulverized coal fleet cost*

2. **New Pulverized Coal**
   - *For a 600 MW plant, @90% Capture 15,000 TPD or 4.3MM TPY removed*
   - *Current SOA technology is amine-based scrubbing (Econamine, KS-1)*
   - *CO_2 Capture "Parasitic Load" ↓'s net efficiency by 4 - 12% points*
   - *Cost of electricity 4 - 5X Existing average pulverized coal fleet cost*

3. **Existing Pulverized Coal**
   - *NETL Existing PC Study Concluded that major <u>no technical barriers</u> exist with retrofitting with amine-based CO_2 capture from 30% to 90% removal*
   - *CO_2 Capture "Parasitic Load" ↓ net efficiency by 3 - 11% points*
   - *Existing PC plant will lose ~120 MW to grid! (532 MWe → 413 MWe)*

4. **Water usage**
   - *Existing PC* ↑ by 40%
   - New PC >> IGCC

**Depending on the cost of Make-up-power*

Appendix

Design Basis: Bituminous Coal Type

Illinois #6 Coal Ultimate Analysis (weight %)

	As Rec'd	Dry
Moisture	11.12	0
Carbon	63.75	71.72
Hydrogen	4.50	5.06
Nitrogen	1.25	1.41
Chlorine	0.29	0.33
Sulfur	2.51	2.82
Ash	9.70	10.91
Oxygen (by difference)	6.88	7.75
	100.0	100.0
HHV (Btu/lb)	11,666	13,126

IGCC Environmental Targets

Based on EPRI's CoalFleet for Tomorrow Initiative design basis

Pollutant	Environmental Target	NSPS Limit[1]	Control Technology
NOx	15 ppmv (dry) @15% O_2	1.0 lb/MWh (0.117 lb/MMBtu)	LNB and syngas nitrogen dilution
SO_2	0.0128 lb/MMBtu	1.4 lb/MWh (0.163 lb/MMBtu)	Sulfinol (NC) Selexol (CC)
PM	0.0071 lb/MMBtu	0.015 lb/MMBtu	Quench, water scrubber
Hg	>90% Removal	20×10^{-6} lb/MWh (2.3 lb/TBtu)	Carbon Bed

NSPS: New Source Performance Standards
NC: No CO_2 Capture
CC: CO_2 Capture Case

[1]Value in parenthesis is calculated based on a heat rate of 8,570 Btu/kWh from the non-capture IGCC case

New Pulverized Coal Environmental Targets

Based on BACT analysis, exceeding new NSPS requirements

Pollutant	Environmental Target	NSPS Limit	Control Technology
NOx	0.07 lb/MMBtu	1.0 lb/MWh (0.111 lb/MMBtu)	LNB, OFA, SCR
SO_2	0.119 lb/MMBtu	1.4 lb/MWh (0.156 lb/MMBtu)	Wet Limestone Scrubber
PM	0.015 lb/MMBtu	0.015 lb/MMBtu	Fabric Filter
Hg	0.70 lb/TBtu	20×10^{-6} lb/MWh (2.2 lb/TBtu)	Co-benefit capture

NSPS: New Source Performance Standards
LNB: Low NOx Burners
OFA: Over-fired air
SCR: Selective Catalytic Reduction

Total Plant Cost

- **Includes**
  - Equipment
    - Initial chemicals and catalyst loadings
  - Materials
  - Labor
    - Direct and Indirect
  - Engineering and Construction Management
  - Project and Process Contingencies

- **Excludes**
  - Owner's costs
    - Land, licensing and permitting, AFUDC
  - Escalation to period of performance
  - Taxes (except payroll)
  - Site specific considerations
  - Labor incentives in excess of 5 day/10 hour work week
  - EPC premiums

New PC Capital Cost

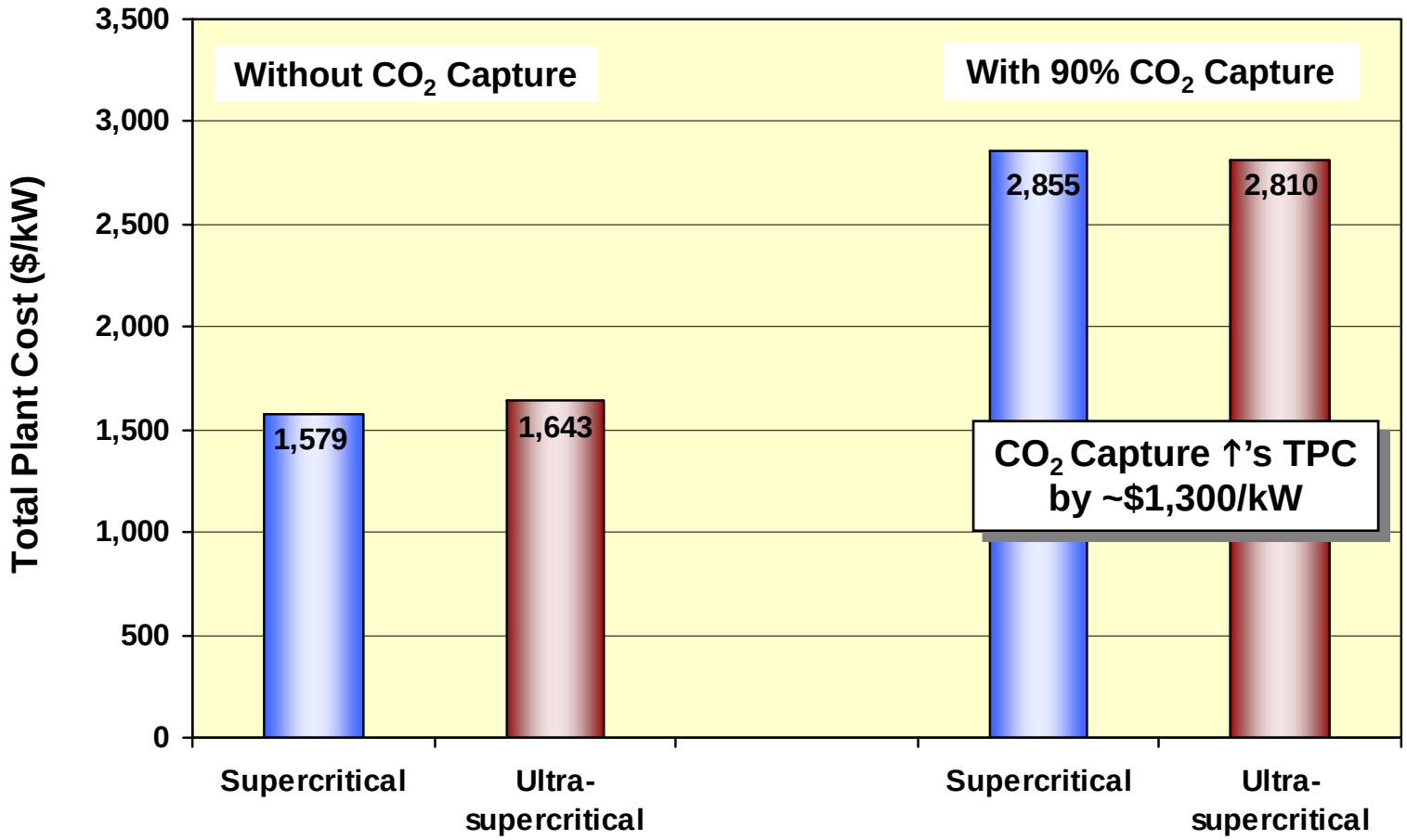

Reference: Pulverized Coal Oxycombustion Power Plants—Volume 1 Bituminous Coal to Electricity, U.S. Department of Energy/National Energy Technology Laboratory, Revision 2 Final Report, August 2008

IGCC Total Plant Cost Summary

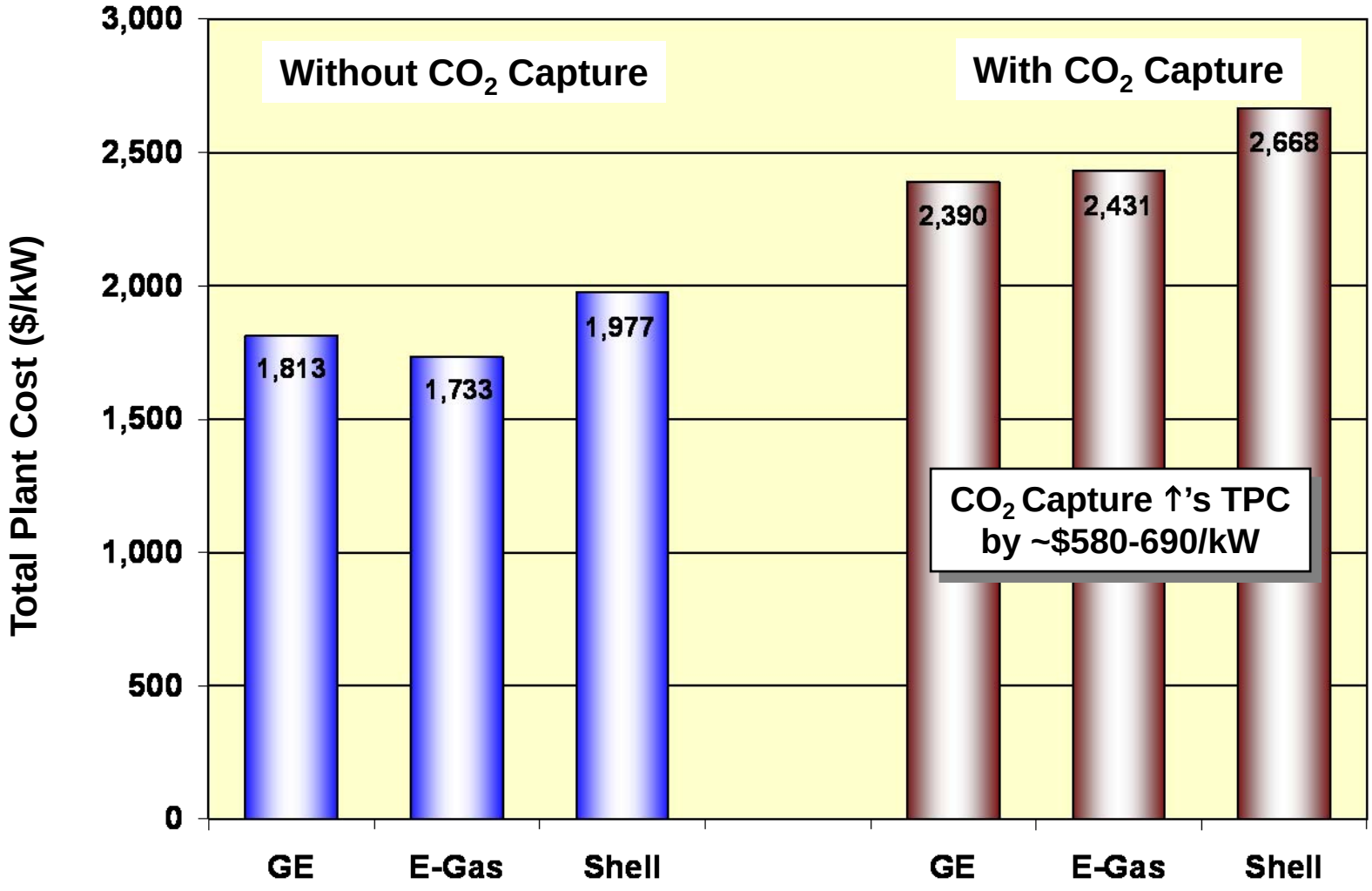

Note: See Appendix for Total Plant Cost Line Items Included and Excluded

Economic Assumptions

Financial Structure

Type of Security	% of Total	Current (Nominal) Dollar Cost	Weighted Current (Nominal) Cost	After Tax Weighted Cost of Capital
Low Risk				
Debt	50	9%	4.5%	2.79%
Equity	50	12%	6%	6%
			11%	8.79%
High Risk				
Debt	45	11%	4.95%	3.07%
Equity	55	12%	6.6%	6.6%
			11.55%	9.67%

	High Risk	Low Risk
Capital Charge Factor	0.175	0.164
Coal Levilization Factor	1.1439	1.1485
General O&M Levelization Factor	1.1607	1.1660

Economic Assumptions

Parameter Assumptions

Parameter	Value
Income Tax Rate	38% Effective (34% Federal, 6% State less 1% Property and 1% Insurance)
Repayment Term of Debt	15 years
Grace Period on Debt Repayment	0 years
Debt Reserve Fund	None
Depreciation	20 years, 150% Declining Balance
Working Capital	Zero for all parameters
Plant Economic Life	30 years
Investment Tax Credit	0%
Tax Holiday	0 years
Start-up Costs (% EPC)	2%
All other additional costs ($)	0
EPC escalation	0%
Duration of Construction	3 years

CO_2 Mitigation Costs

CO_2 Avoided

$$\frac{(COE_{capture} - COE_{base})}{(Emissions_{base} - Emissions_{capture})}$$

CO_2 Captured

$$\frac{(COE_{capture} - COE_{base})}{(CO_2 \text{ Removed})}$$

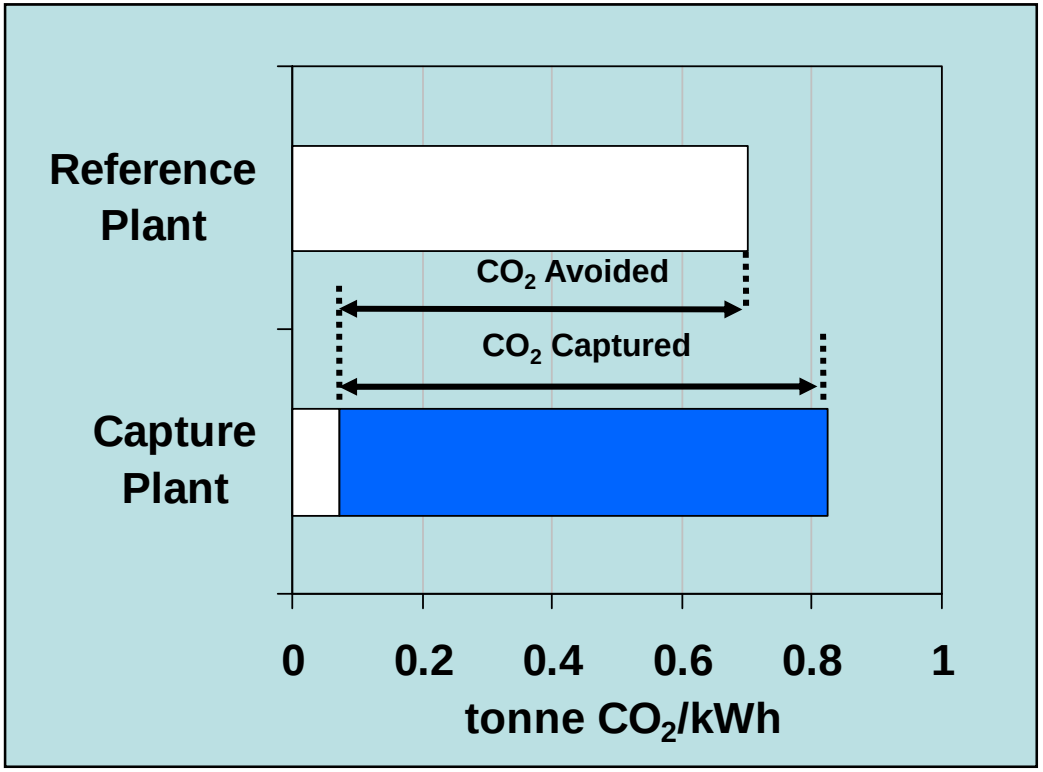

CO_2 Capture Process

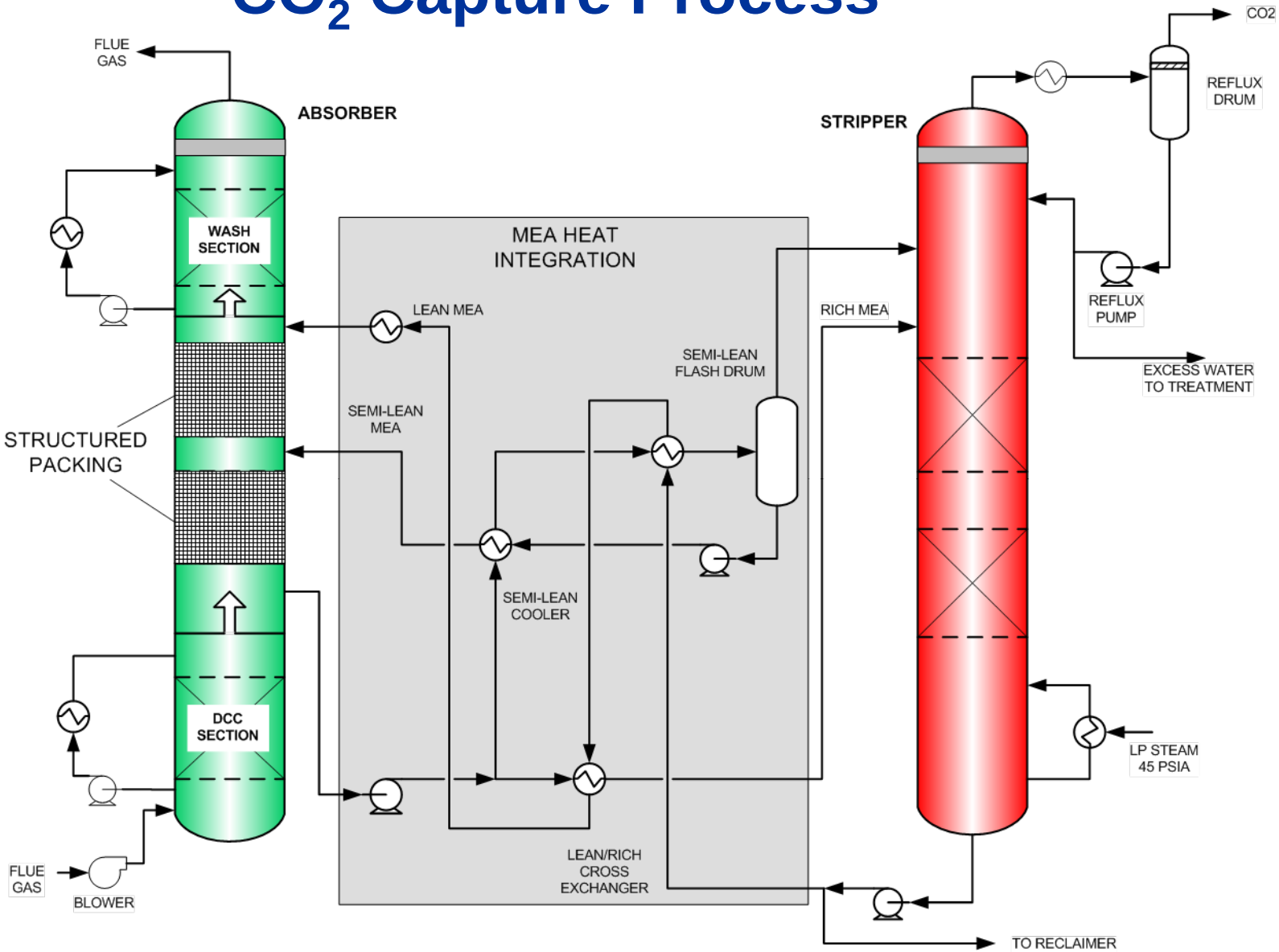
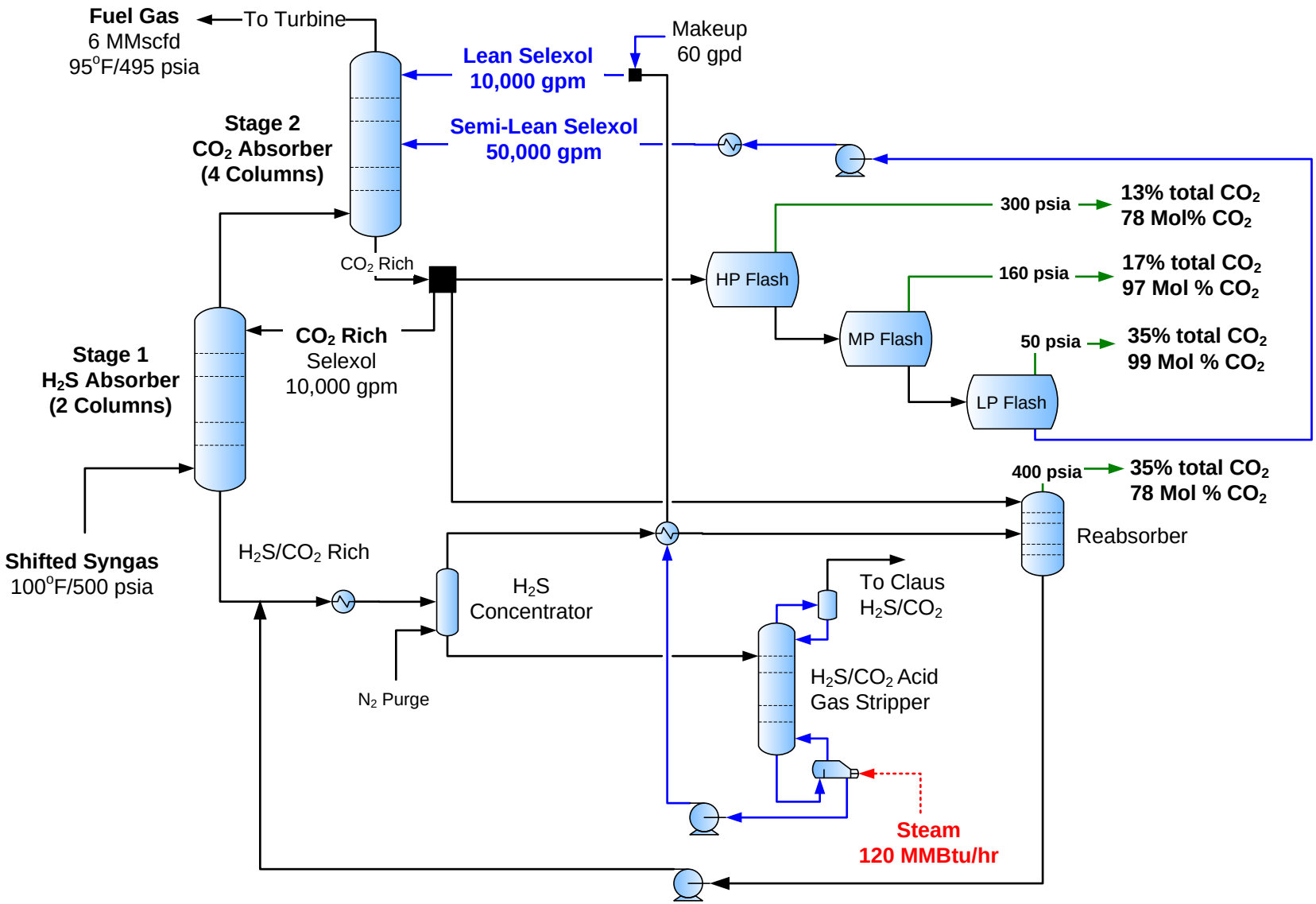
Selexol™ Scrubbing