ARTICLE 14. ONE AND TWO FAMILY DWELLING CODE

Rule 1. Indiana One and Two Family Dwelling Code (Repealed)

(Repealed by Fire Prevention and Building Safety Commission; filed Aug 27, 1990, 3:20 p.m.: 14 IR 134, eff Nov 1, 1990)

Rule 2. Amendments to the Adopted CABO One and Two Family Dwelling Code (Repealed)

(Repealed by Fire Prevention and Building Safety Commission; filed Jan 15, 1987, 10:40 am: 10 IR 1272, eff Mar 1, 1987)

Rule 2.1. CABO One and Two Family Dwelling Code; Amendments

675 IAC 14-2.1-1 Scope (Repealed)

Sec. 1. *(Repealed by Fire Prevention and Building Safety Commission; filed Aug 27, 1990, 3:20 p.m.: 14 IR 134, eff Nov 1, 1990)*

675 IAC 14-2.1-2 Authority (Repealed)

Sec. 2. *(Repealed by Fire Prevention and Building Safety Commission; filed Aug 27, 1990, 3:20 p.m.: 14 IR 134, eff Nov 1, 1990)*

675 IAC 14-2.1-3 Violations (Repealed)

Sec. 3. *(Repealed by Fire Prevention and Building Safety Commission; filed Aug 27, 1990, 3:20 p.m.: 14 IR 134, eff Nov 1, 1990)*

675 IAC 14-2.1-4 Penalty (Repealed)

Sec. 4. *(Repealed by Fire Prevention and Building Safety Commission; filed Aug 27, 1990, 3:20 p.m.: 14 IR 134, eff Nov 1, 1990)*

675 IAC 14-2.1-5 Right of appeal (Repealed)

Sec. 5. *(Repealed by Fire Prevention and Building Safety Commission; filed Aug 27, 1990, 3:20 p.m.: 14 IR 134, eff Nov 1, 1990)*

675 IAC 14-2.1-6 Alternate materials, methods and designs (Repealed)

Sec. 6. *(Repealed by Fire Prevention and Building Safety Commission; filed Aug 27, 1990, 3:20 p.m.: 14 IR 134, eff Nov 1, 1990)*

675 IAC 14-2.1-7 Permit required (Repealed)

Sec. 7. *(Repealed by Fire Prevention and Building Safety Commission; filed Aug 27, 1990, 3:20 p.m.: 14 IR 134, eff Nov 1, 1990)*

675 IAC 14-2.1-8 Other inspections (Repealed)

Sec. 8. *(Repealed by Fire Prevention and Building Safety Commission; filed Aug 27, 1990, 3:20 p.m.: 14 IR 134, eff Nov 1, 1990)*

675 IAC 14-2.1-9 Approval required (Repealed)

Sec. 9. *(Repealed by Fire Prevention and Building Safety Commission; filed Aug 27, 1990, 3:20 p.m.: 14 IR 134, eff Nov 1, 1990)*

675 IAC 14-2.1-10 Existing installations (Repealed)

Sec. 10. *(Repealed by Fire Prevention and Building Safety Commission; filed Aug 27, 1990, 3:20 p.m.: 14 IR 134, eff Nov 1, 1990)*

675 IAC 14-2.1-11 Definitions (Repealed)

Sec. 11. *(Repealed by Fire Prevention and Building Safety Commission; filed Aug 27, 1990, 3:20 p.m.: 14 IR 134, eff Nov 1, 1990)*

675 IAC 14-2.1-12 Climatic and geographic criteria (Repealed)

Sec. 12. *(Repealed by Fire Prevention and Building Safety Commission; filed Aug 27, 1990, 3:20 p.m.: 14 IR 134, eff Nov 1, 1990)*

675 IAC 14-2.1-13 Workmanship (Repealed)

Sec. 13. *(Repealed by Fire Prevention and Building Safety Commission; filed Aug 27, 1990, 3:20 p.m.: 14 IR 134, eff Nov 1, 1990)*

675 IAC 14-2.1-14 Parapets (Repealed)

Sec. 14. *(Repealed by Fire Prevention and Building Safety Commission; filed Aug 27, 1990, 3:20 p.m.: 14 IR 134, eff Nov 1, 1990)*

675 IAC 14-2.1-15 Structural independence (Repealed)

Sec. 15. *(Repealed by Fire Prevention and Building Safety Commission; filed Feb 8, 1988, 10:03 am: 11 IR 1796)*

675 IAC 14-2.1-16 Bathrooms (Repealed)

Sec. 16. *(Repealed by Fire Prevention and Building Safety Commission; filed Aug 27, 1990, 3:20 p.m.: 14 IR 134, eff Nov 1, 1990)*

675 IAC 14-2.1-17 Heating (Repealed)

Sec. 17. *(Repealed by Fire Prevention and Building Safety Commission; filed Aug 27, 1990, 3:20 p.m.: 14 IR 134, eff Nov 1, 1990)*

675 IAC 14-2.1-18 Hazardous locations (Repealed)

Sec. 18. *(Repealed by Fire Prevention and Building Safety Commission; filed Aug 27, 1990, 3:20 p.m.: 14 IR 134, eff Nov 1, 1990)*

675 IAC 14-2.1-19 Attached garages (Repealed)

Sec. 19. *(Repealed by Fire Prevention and Building Safety Commission; filed Aug 27, 1990, 3:20 p.m.: 14 IR 134, eff Nov 1, 1990)*

675 IAC 14-2.1-20 Garages, carports and accessory structures (Repealed)

Sec. 20. *(Repealed by Fire Prevention and Building Safety Commission; filed Aug 27, 1990, 3:20 p.m.: 14 IR 134, eff Nov 1, 1990)*

675 IAC 14-2.1-21 Emergency egress openings (Repealed)

Sec. 21. *(Repealed by Fire Prevention and Building Safety Commission; filed Aug 27, 1990, 3:20 p.m.: 14 IR 134, eff Nov 1, 1990)*

675 IAC 14-2.1-22 Landings (Repealed)

Sec. 22. *(Repealed by Fire Prevention and Building Safety Commission; filed Aug 27, 1990, 3:20 p.m.: 14 IR 134, eff Nov 1, 1990)*

675 IAC 14-2.1-23 Spiral stairs and winders (Repealed)

Sec. 23. *(Repealed by Fire Prevention and Building Safety Commission; filed Aug 27, 1990, 3:20 p.m.: 14 IR 134, eff Nov 1, 1990)*

675 IAC 14-2.1-24 Smoke detector required (Repealed)

Sec. 24. *(Repealed by Fire Prevention and Building Safety Commission; filed Aug 27, 1990, 3:20 p.m.: 14 IR 134, eff Nov 1, 1990)*

675 IAC 14-2.1-25 Attics and crawlspaces (Repealed)

Sec. 25. *(Repealed by Fire Prevention and Building Safety Commission; filed Aug 27, 1990, 3:20 p.m.: 14 IR 134, eff Nov 1, 1990)*

675 IAC 14-2.1-26 Climatic and geographic design criteria; Table No. R-202 (Repealed)

Sec. 26. *(Repealed by Fire Prevention and Building Safety Commission; filed Aug 27, 1990, 3:20 p.m.: 14 IR 134, eff Nov 1, 1990)*

675 IAC 14-2.1-27 Minimum uniformly distributed live loads; Table No. R-202.4 (Repealed)

Sec. 27. *(Repealed by Fire Prevention and Building Safety Commission; filed Aug 27, 1990, 3:20 p.m.: 14 IR 134, eff Nov 1, 1990)*

675 IAC 14-2.1-28 Roof live loads; Figure No. R-202.1 (Repealed)

Sec. 28. *(Repealed by Fire Prevention and Building Safety Commission; filed Aug 27, 1990, 3:20 p.m.: 14 IR 134, eff Nov 1, 1990)*

675 IAC 14-2.1-29 Frost line depth; Figure No. R-202.2 (Repealed)

Sec. 29. *(Repealed by Fire Prevention and Building Safety Commission; filed Aug 27, 1990, 3:20 p.m.: 14 IR 134, eff Nov 1, 1990)*

675 IAC 14-2.1-30 Detached garages, detached carports or accessory structures; Table No. R-210 (Repealed)

Sec. 30. *(Repealed by Fire Prevention and Building Safety Commission; filed Aug 27, 1990, 3:20 p.m.: 14 IR 134, eff Nov 1, 1990)*

675 IAC 14-2.1-31 Soil test (Repealed)

Sec. 31. *(Repealed by Fire Prevention and Building Safety Commission; filed Aug 27, 1990, 3:20 p.m.: 14 IR 134, eff Nov 1, 1990)*

675 IAC 14-2.1-32 Concrete (Repealed)

Sec. 32. *(Repealed by Fire Prevention and Building Safety Commission; filed Aug 27, 1990, 3:20 p.m.: 14 IR 134, eff Nov 1, 1990)*

675 IAC 14-2.1-33 Footings (Repealed)

Sec. 33. *(Repealed by Fire Prevention and Building Safety Commission; filed Aug 27, 1990, 3:20 p.m.: 14 IR 134, eff Nov 1, 1990)*

675 IAC 14-2.1-34 Backfill damage (Repealed)

Sec. 34. *(Repealed by Fire Prevention and Building Safety Commission; filed Aug 27, 1990, 3:20 p.m.: 14 IR 134, eff Nov 1, 1990)*

675 IAC 14-2.1-35 Drains required (Repealed)

Sec. 35. *(Repealed by Fire Prevention and Building Safety Commission; filed Aug 27, 1990, 3:20 p.m.: 14 IR 134, eff Nov 1, 1990)*

675 IAC 14-2.1-36 Dampproofing for concrete and masonry foundations (Repealed)

Sec. 36. *(Repealed by Fire Prevention and Building Safety Commission; filed Aug 27, 1990, 3:20 p.m.: 14 IR 134, eff Nov 1, 1990)*

675 IAC 14-2.1-37 Location required (Repealed)

Sec. 37. *(Repealed by Fire Prevention and Building Safety Commission; filed Aug 27, 1990, 3:20 p.m.: 14 IR 134, eff Nov 1, 1990)*

675 IAC 14-2.1-38 Drainage (Repealed)

Sec. 38. *(Repealed by Fire Prevention and Building Safety Commission; filed Aug 27, 1990, 3:20 p.m.: 14 IR 134, eff Nov 1, 1990)*

675 IAC 14-2.1-39 Minimum specified compressive strength of concrete; Table No. R-302.3 (Repealed)

Sec. 39. *(Repealed by Fire Prevention and Building Safety Commission; filed Aug 27, 1990, 3:20 p.m.: 14 IR 134, eff Nov 1, 1990)*

675 IAC 14-2.1-40 Minimum foundation requirements; Figure No. R-303 (Repealed)

Sec. 40. *(Repealed by Fire Prevention and Building Safety Commission; filed Aug 27, 1990, 3:20 p.m.: 14 IR 134, eff Nov 1, 1990)*

675 IAC 14-2.1-41 Construction (Repealed)

Sec. 41. *(Repealed by Fire Prevention and Building Safety Commission; filed Aug 27, 1990, 3:20 p.m.: 14 IR 134, eff Nov 1, 1990)*

675 IAC 14-2.1-42 Cutting and notching (Repealed)

Sec. 42. *(Repealed by Fire Prevention and Building Safety Commission; filed Aug 27, 1990, 3:20 p.m.: 14 IR 134, eff Nov 1, 1990)*

675 IAC 14-2.1-43 Firestopping (Repealed)

Sec. 43. *(Repealed by Fire Prevention and Building Safety Commission; filed Aug 27, 1990, 3:20 p.m.: 14 IR 134, eff Nov 1, 1990)*

675 IAC 14-2.1-44 Draftstopping (Repealed)

Sec. 44. *(Repealed by Fire Prevention and Building Safety Commission; filed Aug 27, 1990, 3:20 p.m.: 14 IR 134, eff Nov 1, 1990)*

675 IAC 14-2.1-45 Plywood (Repealed)

Sec. 45. *(Repealed by Fire Prevention and Building Safety Commission; filed Aug 27, 1990, 3:20 p.m.: 14 IR 134, eff Nov 1, 1990)*

675 IAC 14-2.1-46 Fastener schedule for structural members; Table No. R-402.3.2 (Repealed)

Sec. 46. *(Repealed by Fire Prevention and Building Safety Commission; filed Aug 27, 1990, 3:20 p.m.: 14 IR 134, eff Nov 1, 1990)*

675 IAC 14-2.1-47 Figure No. R-402.3.2 (Repealed)

Sec. 47. *(Repealed by Fire Prevention and Building Safety Commission; filed Aug 27, 1990, 3:20 p.m.: 14 IR 134, eff Nov 1, 1990)*

675 IAC 14-2.1-48 Flashing (Repealed)

Sec. 48. *(Repealed by Fire Prevention and Building Safety Commission; filed Aug 27, 1990, 3:20 p.m.: 14 IR 134, eff Nov 1, 1990)*

675 IAC 14-2.1-49 Flashing (Repealed)

Sec. 49. *(Repealed by Fire Prevention and Building Safety Commission; filed Aug 27, 1990, 3:20 p.m.: 14 IR 134, eff Nov 1, 1990)*

675 IAC 14-2.1-50 Weather-resistant siding attachment and minimum thickness; Table No. R-503.6 (Repealed)

Sec. 50. *(Repealed by Fire Prevention and Building Safety Commission; filed Aug 27, 1990, 3:20 p.m.: 14 IR 134, eff Nov 1, 1990)*

675 IAC 14-2.1-51 Bearing (Repealed)

Sec. 51. *(Repealed by Fire Prevention and Building Safety Commission; filed Aug 27, 1990, 3:20 p.m.: 14 IR 134, eff Nov 1, 1990)*

675 IAC 14-2.1-52 Base (Repealed)

Sec. 52. *(Repealed by Fire Prevention and Building Safety Commission; filed Aug 27, 1990, 3:20 p.m.: 14 IR 134, eff Nov 1, 1990)*

675 IAC 14-2.1-53 Floor underlayment (Repealed)

Sec. 53. *(Repealed by Fire Prevention and Building Safety Commission; filed Aug 27, 1990, 3:20 p.m.: 14 IR 134, eff Nov 1, 1990)*

675 IAC 14-2.1-54 Floor construction; Figure No. R-601.2 (Repealed)

Sec. 54. *(Repealed by Fire Prevention and Building Safety Commission; filed Aug 27, 1990, 3:20 p.m.: 14 IR 134, eff Nov 1, 1990)*

675 IAC 14-2.1-55 Framing details (Repealed)

Sec. 55. *(Repealed by Fire Prevention and Building Safety Commission; filed Aug 27, 1990, 3:20 p.m.: 14 IR 134, eff Nov 1, 1990)*

675 IAC 14-2.1-56 Allowable spans (Repealed)

Sec. 56. *(Repealed by Fire Prevention and Building Safety Commission; filed Aug 27, 1990, 3:20 p.m.: 14 IR 134, eff Nov 1, 1990)*

675 IAC 14-2.1-57 Bearing (Repealed)

Sec. 57. *(Repealed by Fire Prevention and Building Safety Commission; filed Aug 27, 1990, 3:20 p.m.: 14 IR 134, eff Nov 1, 1990)*

675 IAC 14-2.1-58 Attic ventilation (Repealed)

Sec. 58. *(Repealed by Fire Prevention and Building Safety Commission; filed Aug 27, 1990, 3:20 p.m.: 14 IR 134, eff Nov 1, 1990)*

675 IAC 14-2.1-59 Attic access (Repealed)

Sec. 59. *(Repealed by Fire Prevention and Building Safety Commission; filed Aug 27, 1990, 3:20 p.m.: 14 IR 134, eff Nov 1, 1990)*

675 IAC 14-2.1-60 Framing details; Figure No. R-702.3 (Repealed)

Sec. 60. *(Repealed by Fire Prevention and Building Safety Commission; filed Aug 27, 1990, 3:20 p.m.: 14 IR 134, eff Nov 1, 1990)*

675 IAC 14-2.1-61 Requirements (Repealed)

Sec. 61. *(Repealed by Fire Prevention and Building Safety Commission; filed Aug 27, 1990, 3:20 p.m.: 14 IR 134, eff Nov 1, 1990)*

675 IAC 14-2.1-62 Deck preparation (Repealed)

Sec. 62. *(Repealed by Fire Prevention and Building Safety Commission; filed Aug 27, 1990, 3:20 p.m.: 14 IR 134, eff Nov 1, 1990)*

675 IAC 14-2.1-63 Composition shingles (Repealed)

Sec. 63. *(Repealed by Fire Prevention and Building Safety Commission; filed Aug 27, 1990, 3:20 p.m.: 14 IR 134, eff Nov 1, 1990)*

675 IAC 14-2.1-64 General (Repealed)

Sec. 64. *(Repealed by Fire Prevention and Building Safety Commission; filed Aug 27, 1990, 3:20 p.m.: 14 IR 134, eff Nov 1, 1990)*

675 IAC 14-2.1-65 Slopes less than four inches (4") in twelve inches (12") but not less than two inches (2") in twelve inches (12") (Repealed)

Sec. 65. *(Repealed by Fire Prevention and Building Safety Commission; filed Aug 27, 1990, 3:20 p.m.: 14 IR 134, eff Nov 1, 1990)*

675 IAC 14-2.1-66 Fasteners (Repealed)

Sec. 66. *(Repealed by Fire Prevention and Building Safety Commission; filed Aug 27, 1990, 3:20 p.m.: 14 IR 134, eff Nov 1, 1990)*

675 IAC 14-2.1-67 Valley flashing (Repealed)

Sec. 67. *(Repealed by Fire Prevention and Building Safety Commission; filed Aug 27, 1990, 3:20 p.m.: 14 IR 134, eff Nov 1, 1990)*

675 IAC 14-2.1-68 Wall flashing (Repealed)

Sec. 68. *(Repealed by Fire Prevention and Building Safety Commission; filed Aug 27, 1990, 3:20 p.m.: 14 IR 134, eff Nov 1, 1990)*

675 IAC 14-2.1-69 Other flashing (Repealed)

Sec. 69. *(Repealed by Fire Prevention and Building Safety Commission; filed Aug 27, 1990, 3:20 p.m.: 14 IR 134, eff Nov 1, 1990)*

675 IAC 14-2.1-70 Hips and ridges (Repealed)

Sec. 70. *(Repealed by Fire Prevention and Building Safety Commission; filed Aug 27, 1990, 3:20 p.m.: 14 IR 134, eff Nov 1, 1990)*

675 IAC 14-2.1-71 Built-up roofing (Repealed)

Sec. 71. *(Repealed by Fire Prevention and Building Safety Commission; filed Aug 27, 1990, 3:20 p.m.: 14 IR 134, eff Nov 1, 1990)*

675 IAC 14-2.1-72 Roof coverings; Table No. R-801.2 (Repealed)

Sec. 72. *(Repealed by Fire Prevention and Building Safety Commission; filed Aug 27, 1990, 3:20 p.m.: 14 IR 134, eff Nov 1, 1990)*

675 IAC 14-2.1-73 Support (Repealed)

Sec. 73. *(Repealed by Fire Prevention and Building Safety Commission; filed Aug 27, 1990, 3:20 p.m.: 14 IR 134, eff Nov 1, 1990)*

675 IAC 14-2.1-73.1 Flue lining (Repealed)

Sec. 73.1. *(Repealed by Fire Prevention and Building Safety Commission; filed Aug 27, 1990, 3:20 p.m.: 14 IR 134, eff Nov 1, 1990)*

675 IAC 14-2.1-74 Flue area (Repealed)

Sec. 74. *(Repealed by Fire Prevention and Building Safety Commission; filed Aug 27, 1990, 3:20 p.m.: 14 IR 134, eff Nov 1, 1990)*

675 IAC 14-2.1-75 Fireplace support (Repealed)

Sec. 75. *(Repealed by Fire Prevention and Building Safety Commission; filed Aug 27, 1990, 3:20 p.m.: 14 IR 134, eff Nov 1, 1990)*

675 IAC 14-2.1-76 Fireplace and chimney details; Figure No. R-904 (Repealed)

Sec. 76. *(Repealed by Fire Prevention and Building Safety Commission; filed Aug 27, 1990, 3:20 p.m.: 14 IR 134, eff Nov 1, 1990)*

675 IAC 14-2.1-77 Installation (Repealed)

Sec. 77. *(Repealed by Fire Prevention and Building Safety Commission; filed Aug 27, 1990, 3:20 p.m.: 14 IR 134, eff Nov 1, 1990)*

675 IAC 14-2.1-78 Definitions (Repealed)

Sec. 78. *(Repealed by Fire Prevention and Building Safety Commission; filed Aug 27, 1990, 3:20 p.m.: 14 IR 134, eff Nov 1, 1990)*

675 IAC 14-2.1-79 General (Repealed)

Sec. 79. *(Repealed by Fire Prevention and Building Safety Commission; filed Aug 27, 1990, 3:20 p.m.: 14 IR 134, eff Nov 1, 1990)*

675 IAC 14-2.1-80 Type of fuel; fuel connection (Repealed)

Sec. 80. *(Repealed by Fire Prevention and Building Safety Commission; filed Aug 27, 1990, 3:20 p.m.: 14 IR 134, eff Nov 1, 1990)*

675 IAC 14-2.1-81 Fuel-burning appliance labeling (Repealed)

Sec. 81. *(Repealed by Fire Prevention and Building Safety Commission; filed Aug 27, 1990, 3:20 p.m.: 14 IR 134, eff Nov 1, 1990)*

675 IAC 14-2.1-82 Appliance (Repealed)

Sec. 82. *(Repealed by Fire Prevention and Building Safety Commission; filed Aug 27, 1990, 3:20 p.m.: 14 IR 134, eff Nov 1, 1990)*

675 IAC 14-2.1-83 General air supply (Repealed)

Sec. 83. *(Repealed by Fire Prevention and Building Safety Commission; filed Aug 27, 1990, 3:20 p.m.: 14 IR 134, eff Nov 1, 1990)*

675 IAC 14-2.1-84 Existing buildings (Repealed)

Sec. 84. *(Repealed by Fire Prevention and Building Safety Commission; filed Aug 27, 1990, 3:20 p.m.: 14 IR 134, eff Nov 1, 1990)*

675 IAC 14-2.1-85 Prohibited sources (Repealed)

Sec. 85. *(Repealed by Fire Prevention and Building Safety Commission; filed Aug 27, 1990, 3:20 p.m.: 14 IR 134, eff Nov 1, 1990)*

675 IAC 14-2.1-86 Interior spaces (Repealed)

Sec. 86. *(Repealed by Fire Prevention and Building Safety Commission; filed Aug 27, 1990, 3:20 p.m.: 14 IR 134, eff Nov 1, 1990)*

675 IAC 14-2.1-87 Attic combustion air (Repealed)

Sec. 87. *(Repealed by Fire Prevention and Building Safety Commission; filed Aug 27, 1990, 3:20 p.m.: 14 IR 134, eff Nov 1, 1990)*

675 IAC 14-2.1-88 Combustion air (Repealed)

Sec. 88. *(Repealed by Fire Prevention and Building Safety Commission; filed Aug 27, 1990, 3:20 p.m.: 14 IR 134, eff Nov 1, 1990)*

675 IAC 14-2.1-89 Ducts (Repealed)

Sec. 89. *(Repealed by Fire Prevention and Building Safety Commission; filed Aug 27, 1990, 3:20 p.m.: 14 IR 134, eff Nov 1, 1990)*

675 IAC 14-2.1-90 Area of combustion air openings (Repealed)

Sec. 90. *(Repealed by Fire Prevention and Building Safety Commission; filed Aug 27, 1990, 3:20 p.m.: 14 IR 134, eff Nov 1, 1990)*

675 IAC 14-2.1-91 Cold climate (Repealed)

Sec. 91. *(Repealed by Fire Prevention and Building Safety Commission; filed Aug 27, 1990, 3:20 p.m.: 14 IR 134, eff Nov 1, 1990)*

675 IAC 14-2.1-92 Appliance room combustion air requirements in cold climates; Table No. M-1211 (Repealed)

Sec. 92. *(Repealed by Fire Prevention and Building Safety Commission; filed Aug 27, 1990, 3:20 p.m.: 14 IR 134, eff Nov 1, 1990)*

675 IAC 14-2.1-93 Existing furnaces (Repealed)

Sec. 93. *(Repealed by Fire Prevention and Building Safety Commission; filed Aug 27, 1990, 3:20 p.m.: 14 IR 134, eff Nov 1, 1990)*

675 IAC 14-2.1-94 Prohibited location (Repealed)

Sec. 94. *(Repealed by Fire Prevention and Building Safety Commission; filed Aug 27, 1990, 3:20 p.m.: 14 IR 134, eff Nov 1, 1990)*

675 IAC 14-2.1-95 General (Repealed)

Sec. 95. *(Repealed by Fire Prevention and Building Safety Commission; filed Aug 27, 1990, 3:20 p.m.: 14 IR 134, eff Nov 1, 1990)*

675 IAC 14-2.1-96 General (Repealed)

Sec. 96. *(Repealed by Fire Prevention and Building Safety Commission; filed Aug 27, 1990, 3:20 p.m.: 14 IR 134, eff Nov 1, 1990)*

675 IAC 14-2.1-97 Circulating air supply–prohibited source (Repealed)

Sec. 97. *(Repealed by Fire Prevention and Building Safety Commission; filed Aug 27, 1990, 3:20 p.m.: 14 IR 134, eff Nov 1, 1990)*

675 IAC 14-2.1-98 General (Repealed)

Sec. 98. *(Repealed by Fire Prevention and Building Safety Commission; filed Aug 27, 1990, 3:20 p.m.: 14 IR 134, eff Nov 1, 1990)*

675 IAC 14-2.1-99 Floor furnaces (Repealed)

Sec. 99. *(Repealed by Fire Prevention and Building Safety Commission; filed Aug 27, 1990, 3:20 p.m.: 14 IR 134, eff Nov 1, 1990)*

675 IAC 14-2.1-100 Floor furnace access (Repealed)

Sec. 100. *(Repealed by Fire Prevention and Building Safety Commission; filed Aug 27, 1990, 3:20 p.m.: 14 IR 134, eff Nov 1, 1990)*

675 IAC 14-2.1-101 Floor furnace installation (Repealed)

Sec. 101. *(Repealed by Fire Prevention and Building Safety Commission; filed Aug 27, 1990, 3:20 p.m.: 14 IR 134, eff Nov 1, 1990)*

675 IAC 14-2.1-102 General (Repealed)

Sec. 102. *(Repealed by Fire Prevention and Building Safety Commission; filed Aug 27, 1990, 3:20 p.m.: 14 IR 134, eff Nov 1, 1990)*

675 IAC 14-2.1-103 Installation requirements (Repealed)

Sec. 103. *(Repealed by Fire Prevention and Building Safety Commission; filed Aug 27, 1990, 3:20 p.m.: 14 IR 134, eff Nov 1, 1990)*

675 IAC 14-2.1-104 Access (Repealed)

Sec. 104. *(Repealed by Fire Prevention and Building Safety Commission; filed Aug 27, 1990, 3:20 p.m.: 14 IR 134, eff Nov 1, 1990)*

675 IAC 14-2.1-105 Joints and seams of ducts (Repealed)

Sec. 105. *(Repealed by Fire Prevention and Building Safety Commission; filed Aug 27, 1990, 3:20 p.m.: 14 IR 134, eff Nov 1, 1990)*

675 IAC 14-2.1-106 Installation (Repealed)

Sec. 106. *(Repealed by Fire Prevention and Building Safety Commission; filed Aug 27, 1990, 3:20 p.m.: 14 IR 134, eff Nov 1, 1990)*

675 IAC 14-2.1-107 Installation (Repealed)

Sec. 107. *(Repealed by Fire Prevention and Building Safety Commission; filed Aug 27, 1990, 3:20 p.m.: 14 IR 134, eff Nov 1, 1990)*

675 IAC 14-2.1-108 Underfloor plenum; single dwelling (Repealed)

Sec. 108. *(Repealed by Fire Prevention and Building Safety Commission; filed Aug 27, 1990, 3:20 p.m.: 14 IR 134, eff Nov 1, 1990)*

675 IAC 14-2.1-109 Ventilation systems (Repealed)

Sec. 109. *(Repealed by Fire Prevention and Building Safety Commission; filed Aug 27, 1990, 3:20 p.m.: 14 IR 134, eff Nov 1, 1990)*

675 IAC 14-2.1-110 Condensate disposal (Repealed)

Sec. 110. *(Repealed by Fire Prevention and Building Safety Commission; filed Aug 27, 1990, 3:20 p.m.: 14 IR 134, eff Nov 1, 1990)*

675 IAC 14-2.1-111 Identification (Repealed)

Sec. 111. *(Repealed by Fire Prevention and Building Safety Commission; filed Aug 27, 1990, 3:20 p.m.: 14 IR 134, eff Nov 1, 1990)*

675 IAC 14-2.1-112 Containers above ground (Repealed)

Sec. 112. *(Repealed by Fire Prevention and Building Safety Commission; filed Aug 27, 1990, 3:20 p.m.: 14 IR 134, eff Nov 1, 1990)*

675 IAC 14-2.1-113 Containers below ground (Repealed)

Sec. 113. *(Repealed by Fire Prevention and Building Safety Commission; filed Aug 27, 1990, 3:20 p.m.: 14 IR 134, eff Nov 1, 1990)*

675 IAC 14-2.1-114 Pipe size (Repealed)

Sec. 114. *(Repealed by Fire Prevention and Building Safety Commission; filed Aug 27, 1990, 3:20 p.m.: 14 IR 134, eff Nov 1, 1990)*

675 IAC 14-2.1-115 Shutoff valves (Repealed)

Sec. 115. *(Repealed by Fire Prevention and Building Safety Commission; filed Aug 27, 1990, 3:20 p.m.: 14 IR 134, eff Nov 1, 1990)*

675 IAC 14-2.1-116 Appliance connectors (Repealed)

Sec. 116. *(Repealed by Fire Prevention and Building Safety Commission; filed Aug 27, 1990, 3:20 p.m.: 14 IR 134, eff Nov 1, 1990)*

675 IAC 14-2.1-117 Oil fuel supply (Repealed)

Sec. 117. *(Repealed by Fire Prevention and Building Safety Commission; filed Aug 27, 1990, 3:20 p.m.: 14 IR 134, eff Nov 1, 1990)*

675 IAC 14-2.1-118 Application (Repealed)

Sec. 118. *(Repealed by Fire Prevention and Building Safety Commission; filed Aug 27, 1990, 3:20 p.m.: 14 IR 134, eff Nov 1, 1990)*

675 IAC 14-2.1-119 Studs in nonbearing partitions (Repealed)

Sec. 119. *(Repealed by Fire Prevention and Building Safety Commission; filed Aug 27, 1990, 3:20 p.m.: 14 IR 134, eff Nov 1, 1990)*

675 IAC 14-2.1-120 Definitions (Repealed)

Sec. 120. *(Repealed by Fire Prevention and Building Safety Commission; filed Aug 27, 1990, 3:20 p.m.: 14 IR 134, eff Nov 1, 1990)*

675 IAC 14-2.1-120.5 Building sewers (Repealed)

Sec. 120.5. *(Repealed by Fire Prevention and Building Safety Commission; filed Aug 27, 1990, 3:20 p.m.: 14 IR 134, eff Nov 1, 1990)*

675 IAC 14-2.1-121 Underground (Repealed)

Sec. 121. *(Repealed by Fire Prevention and Building Safety Commission; filed Aug 27, 1990, 3:20 p.m.: 14 IR 134, eff Nov 1, 1990)*

675 IAC 14-2.1-122 Number of fixtures per trap (Repealed)

Sec. 122. *(Repealed by Fire Prevention and Building Safety Commission; filed Aug 27, 1990, 3:20 p.m.: 14 IR 134, eff Nov 1, 1990)*

675 IAC 14-2.1-123 Vertical leg for waste fixture drains (Repealed)

Sec. 123. *(Repealed by Fire Prevention and Building Safety Commission; filed Aug 27, 1990, 3:20 p.m.: 14 IR 134, eff Nov 1, 1990)*

675 IAC 14-2.1-124 Dry vent sizing (Repealed)

Sec. 124. *(Repealed by Fire Prevention and Building Safety Commission; filed Aug 27, 1990, 3:20 p.m.: 14 IR 134, eff Nov 1, 1990)*

675 IAC 14-2.1-125 Typical single bath wet-vent arrangements; Figure No. P-2207.7.2 (Repealed)

Sec. 125. *(Repealed by Fire Prevention and Building Safety Commission; filed Aug 27, 1990, 3:20 p.m.: 14 IR 134, eff Nov 1, 1990)*

675 IAC 14-2.1-126 Typical double-bath wet-vent arrangements; Figure No. P-2207.7.3 (Repealed)

Sec. 126. *(Repealed by Fire Prevention and Building Safety Commission; filed Aug 27, 1990, 3:20 p.m.: 14 IR 134, eff Nov 1, 1990)*

675 IAC 14-2.1-127 Wastestack serving as wet-vent for laundry group; Figure No. P-2207.7.5 (Repealed)

Sec. 127. *(Repealed by Fire Prevention and Building Safety Commission; filed Aug 27, 1990, 3:20 p.m.: 14 IR 134, eff Nov 1, 1990)*

675 IAC 14-2.1-128 Typical methods of connecting fixture drains to stack-vented systems; Figure No. P-2207.8.2 (Repealed)

Sec. 128. *(Repealed by Fire Prevention and Building Safety Commission; filed Aug 27, 1990, 3:20 p.m.: 14 IR 134, eff Nov 1, 1990)*

675 IAC 14-2.1-129 Typical single-stack system for a two-story dwelling; Figure No. P-2207.8.3 (Repealed)

Sec. 129. *(Repealed by Fire Prevention and Building Safety Commission; filed Aug 27, 1990, 3:20 p.m.: 14 IR 134, eff Nov 1, 1990)*

675 IAC 14-2.1-130 Typical uniformly sized horizontal branch system; Figure No. P-2207.9-A (Repealed)

Sec. 130. *(Repealed by Fire Prevention and Building Safety Commission; filed Aug 27, 1990, 3:20 p.m.: 14 IR 134, eff Nov 1, 1990)*

675 IAC 14-2.1-131 Typical horizontal branch system reducing in size utilizing wet venting; Figure No. P-2207.9-B (Repealed)

Sec. 131. *(Repealed by Fire Prevention and Building Safety Commission; filed Aug 27, 1990, 3:20 p.m.: 14 IR 134, eff Nov 1, 1990)*

675 IAC 14-2.1-132 Access to connections (Repealed)

Sec. 132. *(Repealed by Fire Prevention and Building Safety Commission; filed Aug 27, 1990, 3:20 p.m.: 14 IR 134, eff Nov 1, 1990)*

675 IAC 14-2.1-133 Seals (Repealed)

Sec. 133. *(Repealed by Fire Prevention and Building Safety Commission; filed Aug 27, 1990, 3:20 p.m.: 14 IR 134, eff Nov 1, 1990)*

675 IAC 14-2.1-134 Length of trap arm (Repealed)

Sec. 134. *(Repealed by Fire Prevention and Building Safety Commission; filed Aug 27, 1990, 3:20 p.m.: 14 IR 134, eff Nov 1, 1990)*

675 IAC 14-2.1-135 Showers (Repealed)

Sec. 135. *(Repealed by Fire Prevention and Building Safety Commission; filed Aug 27, 1990, 3:20 p.m.: 14 IR 134, eff Nov 1, 1990)*

675 IAC 14-2.1-136 General (Repealed)

Sec. 136. *(Repealed by Fire Prevention and Building Safety Commission; filed Aug 27, 1990, 3:20 p.m.: 14 IR 134, eff Nov*

1, 1990)

675 IAC 14-2.1-137 Water-supply riser (Repealed)

Sec. 137. *(Repealed by Fire Prevention and Building Safety Commission; filed Aug 27, 1990, 3:20 p.m.: 14 IR 134, eff Nov 1, 1990)*

675 IAC 14-2.1-138 Shower heads (Repealed)

Sec. 138. *(Repealed by Fire Prevention and Building Safety Commission; filed Aug 27, 1990, 3:20 p.m.: 14 IR 134, eff Nov 1, 1990)*

675 IAC 14-2.1-139 Clothes washer (Repealed)

Sec. 139. *(Repealed by Fire Prevention and Building Safety Commission; filed Aug 27, 1990, 3:20 p.m.: 14 IR 134, eff Nov 1, 1990)*

675 IAC 14-2.1-140 Materials (Repealed)

Sec. 140. *(Repealed by Fire Prevention and Building Safety Commission; filed Aug 27, 1990, 3:20 p.m.: 14 IR 134, eff Nov 1, 1990)*

675 IAC 14-2.1-141 Soldered joints (Repealed)

Sec. 141. *(Repealed by Fire Prevention and Building Safety Commission; filed Aug 27, 1990, 3:20 p.m.: 14 IR 134, eff Nov 1, 1990)*

675 IAC 14-2.1-142 General (Repealed)

Sec. 142. *(Repealed by Fire Prevention and Building Safety Commission; filed Aug 27, 1990, 3:20 p.m.: 14 IR 134, eff Nov 1, 1990)*

675 IAC 14-2.1-143 Minimum sizes of fixture branches (Repealed)

Sec. 143. *(Repealed by Fire Prevention and Building Safety Commission; filed Aug 27, 1990, 3:20 p.m.: 14 IR 134, eff Nov 1, 1990)*

675 IAC 14-2.1-144 Chapter 25; sewers and private or individual sewage disposal systems (Repealed)

Sec. 144. *(Repealed by Fire Prevention and Building Safety Commission; filed Aug 27, 1990, 3:20 p.m.: 14 IR 134, eff Nov 1, 1990)*

675 IAC 14-2.1-145 General (Repealed)

Sec. 145. *(Repealed by Fire Prevention and Building Safety Commission; filed Aug 27, 1990, 3:20 p.m.: 14 IR 134, eff Nov 1, 1990)*

675 IAC 14-2.1-146 Building sewer materials (Repealed)

Sec. 146. *(Repealed by Fire Prevention and Building Safety Commission; filed Aug 27, 1990, 3:20 p.m.: 14 IR 134, eff Nov 1, 1990)*

675 IAC 14-2.1-147 Markings (Repealed)

Sec. 147. *(Repealed by Fire Prevention and Building Safety Commission; filed Aug 27, 1990, 3:20 p.m.: 14 IR 134, eff Nov 1, 1990)*

675 IAC 14-2.1-148 Size (Repealed)

Sec. 148. *(Repealed by Fire Prevention and Building Safety Commission; filed Aug 27, 1990, 3:20 p.m.: 14 IR 134, eff Nov 1, 1990)*

675 IAC 14-2.1-149 Grade, support (Repealed)

Sec. 149. *(Repealed by Fire Prevention and Building Safety Commission; filed Aug 27, 1990, 3:20 p.m.: 14 IR 134, eff Nov 1, 1990)*

675 IAC 14-2.1-150 Cleanouts (Repealed)

Sec. 150. *(Repealed by Fire Prevention and Building Safety Commission; filed Aug 27, 1990, 3:20 p.m.: 14 IR 134, eff Nov 1, 1990)*

675 IAC 14-2.1-151 Sewer, water pipes (Repealed)

Sec. 151. *(Repealed by Fire Prevention and Building Safety Commission; filed Aug 27, 1990, 3:20 p.m.: 14 IR 134, eff Nov 1, 1990)*

675 IAC 14-2.1-152 Drawing; specifications (Repealed)

Sec. 152. *(Repealed by Fire Prevention and Building Safety Commission; filed Aug 27, 1990, 3:20 p.m.: 14 IR 134, eff Nov 1, 1990)*

675 IAC 14-2.1-153 Location (Repealed)

Sec. 153. *(Repealed by Fire Prevention and Building Safety Commission; filed Aug 27, 1990, 3:20 p.m.: 14 IR 134, eff Nov 1, 1990)*

675 IAC 14-2.1-154 Abandoned sewers; sewage disposal facilities (Repealed)

Sec. 154. *(Repealed by Fire Prevention and Building Safety Commission; filed Aug 27, 1990, 3:20 p.m.: 14 IR 134, eff Nov 1, 1990)*

675 IAC 14-2.1-155 Electrical; energy conservation (Repealed)

Sec. 155. *(Repealed by Fire Prevention and Building Safety Commission; filed Aug 27, 1990, 3:20 p.m.: 14 IR 134, eff Nov 1, 1990)*

675 IAC 14-2.1-156 Abbreviations (Repealed)

Sec. 156. *(Repealed by Fire Prevention and Building Safety Commission; filed Aug 27, 1990, 3:20 p.m.: 14 IR 134, eff Nov 1, 1990)*

675 IAC 14-2.1-157 Flame-retardant treated wood (Repealed)

Sec. 157. *(Repealed by Fire Prevention and Building Safety Commission; filed Aug 27, 1990, 3:20 p.m.: 14 IR 134, eff Nov 1, 1990)*

675 IAC 14-2.1-158 Foundations (Repealed)

Sec. 158. *(Repealed by Fire Prevention and Building Safety Commission; filed Aug 27, 1990, 3:20 p.m.: 14 IR 134, eff Nov 1, 1990)*

675 IAC 14-2.1-159 Slabs (Repealed)

Sec. 159. *(Repealed by Fire Prevention and Building Safety Commission; filed Aug 27, 1990, 3:20 p.m.: 14 IR 134, eff Nov 1, 1990)*

675 IAC 14-2.1-160 Wall construction (Repealed)

Sec. 160. *(Repealed by Fire Prevention and Building Safety Commission; filed Aug 27, 1990, 3:20 p.m.: 14 IR 134, eff Nov 1, 1990)*

675 IAC 14-2.1-161 Wall covering (Repealed)

Sec. 161. *(Repealed by Fire Prevention and Building Safety Commission; filed Aug 27, 1990, 3:20 p.m.: 14 IR 134, eff Nov 1, 1990)*

675 IAC 14-2.1-162 Roof covering (Repealed)

Sec. 162. *(Repealed by Fire Prevention and Building Safety Commission; filed Aug 27, 1990, 3:20 p.m.: 14 IR 134, eff Nov 1, 1990)*

675 IAC 14-2.1-163 Mechanical materials (Repealed)

Sec. 163. *(Repealed by Fire Prevention and Building Safety Commission; filed Aug 27, 1990, 3:20 p.m.: 14 IR 134, eff Nov 1, 1990)*

675 IAC 14-2.1-164 Mechanical equipment (Repealed)

Sec. 164. *(Repealed by Fire Prevention and Building Safety Commission; filed Aug 27, 1990, 3:20 p.m.: 14 IR 134, eff Nov 1, 1990)*

675 IAC 14-2.1-165 Plumbing; general (Repealed)

Sec. 165. *(Repealed by Fire Prevention and Building Safety Commission; filed Aug 27, 1990, 3:20 p.m.: 14 IR 134, eff Nov 1, 1990)*

675 IAC 14-2.1-166 Sewer pipe (Repealed)

Sec. 166. *(Repealed by Fire Prevention and Building Safety Commission; filed Aug 27, 1990, 3:20 p.m.: 14 IR 134, eff Nov 1, 1990)*

675 IAC 14-2.1-167 Water piping (Repealed)

Sec. 167. *(Repealed by Fire Prevention and Building Safety Commission; filed Aug 27, 1990, 3:20 p.m.: 14 IR 134, eff Nov 1, 1990)*

675 IAC 14-2.1-168 Appendix A (Repealed)

Sec. 168. *(Repealed by Fire Prevention and Building Safety Commission; filed Aug 27, 1990, 3:20 p.m.: 14 IR 134, eff Nov 1, 1990)*

675 IAC 14-2.1-169 Appendix B (Repealed)

Sec. 169. *(Repealed by Fire Prevention and Building Safety Commission; filed Aug 27, 1990, 3:20 p.m.: 14 IR 134, eff Nov 1, 1990)*

675 IAC 14-2.1-170 Appendix C (Repealed)

Sec. 170. *(Repealed by Fire Prevention and Building Safety Commission; filed Aug 27, 1990, 3:20 p.m.: 14 IR 134, eff Nov 1, 1990)*

675 IAC 14-2.1-171 Structural independence (Repealed)

Sec. 171. *(Repealed by Fire Prevention and Building Safety Commission; filed Aug 27, 1990, 3:20 p.m.: 14 IR 134, eff Nov 1, 1990)*

675 IAC 14-2.1-172 Exterior walls (Repealed)

Sec. 172. *(Repealed by Fire Prevention and Building Safety Commission; filed Aug 27, 1990, 3:20 p.m.: 14 IR 134, eff Nov 1, 1990)*

675 IAC 14-2.1-173 Openings (Repealed)

Sec. 173. *(Repealed by Fire Prevention and Building Safety Commission; filed Aug 27, 1990, 3:20 p.m.: 14 IR 134, eff Nov 1, 1990)*

Rule 3. Permanent Installation of Manufactured Homes (Repealed)

(Repealed by Fire Prevention and Building Safety Commission; filed Aug 27, 1990, 3:20 p.m.: 14 IR 134, eff Nov 1, 1990)

Rule 4. Indiana One and Two Family Dwelling Code, 1990 Edition (Repealed)

(Repealed by Fire Prevention and Building Safety Commission; filed Oct 30, 1997, 12:45 p.m.: 21 IR 1003)

Rule 4.1. Indiana One and Two Family Dwelling Code, 1997 Edition (Repealed)

(Repealed by Fire Prevention and Building Safety Commission; filed May 23, 2001, 4:02 p.m.: 24 IR 3066)

Rule 4.2. Indiana Residential Code

675 IAC 14-4.2-1 Adoption by reference; title; availability; purpose (Repealed)

Sec. 1. *(Repealed by Fire Prevention and Building Safety Commission; filed Jun 13, 2005, 3:00 p.m.: 28 IR 3304, eff 90 days after filing with the Secretary of State)*

675 IAC 14-4.2-2 Chapter 1; administration (Repealed)

Sec. 2. *(Repealed by Fire Prevention and Building Safety Commission; filed Jun 13, 2005, 3:00 p.m.: 28 IR 3304, eff 90 days after filing with the Secretary of State)*

675 IAC 14-4.2-3 Section R202; definitions (Repealed)

Sec. 3. *(Repealed by Fire Prevention and Building Safety Commission; filed Jun 13, 2005, 3:00 p.m.: 28 IR 3304, eff 90 days after filing with the Secretary of State)*

675 IAC 14-4.2-4 Section R301.2; climatic and geographic design criteria (Repealed)

Sec. 4. *(Repealed by Fire Prevention and Building Safety Commission; filed Jun 13, 2005, 3:00 p.m.: 28 IR 3304, eff 90 days after filing with the Secretary of State)*

675 IAC 14-4.2-5 Sections R301.2.1.1 and R301.2.1.2; design criteria, internal pressure (Repealed)

Sec. 5. *(Repealed by Fire Prevention and Building Safety Commission; filed Jun 13, 2005, 3:00 p.m.: 28 IR 3304, eff 90 days after filing with the Secretary of State)*

675 IAC 14-4.2-6 Table R301.2(1); climatic and geographical design criteria (Repealed)

Sec. 6. *(Repealed by Fire Prevention and Building Safety Commission; filed Jun 13, 2005, 3:00 p.m.: 28 IR 3304, eff 90 days after filing with the Secretary of State)*

675 IAC 14-4.2-7 Figures R301.2(1), R301.2(2), R301.2(3), R301.2(4), R301.2(5), R301.2(6), and R301.2(7) (Repealed)

Sec. 7. *(Repealed by Fire Prevention and Building Safety Commission; filed Jun 13, 2005, 3:00 p.m.: 28 IR 3304, eff 90 days after filing with the Secretary of State)*

675 IAC 14-4.2-8 Table R301.2.1.2 (Repealed)

Sec. 8. *(Repealed by Fire Prevention and Building Safety Commission; filed Jun 13, 2005, 3:00 p.m.: 28 IR 3304, eff 90 days after filing with the Secretary of State)*

675 IAC 14-4.2-9 Section R301.2.2; seismic provisions (Repealed)

Sec. 9. *(Repealed by Fire Prevention and Building Safety Commission; filed Jun 13, 2005, 3:00 p.m.: 28 IR 3304, eff 90 days after filing with the Secretary of State)*

675 IAC 14-4.2-10 Section R301.2.2.1; determination of seismic design category (Repealed)

Sec. 10. *(Repealed by Fire Prevention and Building Safety Commission; filed Jun 13, 2005, 3:00 p.m.: 28 IR 3304, eff 90 days after filing with the Secretary of State)*

675 IAC 14-4.2-11 Section R301.2.2.1.1; alternate determination of seismic design category (Repealed)

Sec. 11. *(Repealed by Fire Prevention and Building Safety Commission; filed Jun 13, 2005, 3:00 p.m.: 28 IR 3304, eff 90 days after filing with the Secretary of State)*

675 IAC 14-4.2-12 Section R301.2.2.1.2; alternative determination of seismic design category E (Repealed)

Sec. 12. *(Repealed by Fire Prevention and Building Safety Commission; filed Jun 13, 2005, 3:00 p.m.: 28 IR 3304, eff 90 days after filing with the Secretary of State)*

675 IAC 14-4.2-13 Section R301.2.2.2; determination of seismic design category (Repealed)

Sec. 13. *(Repealed by Fire Prevention and Building Safety Commission; filed Jun 13, 2005, 3:00 p.m.: 28 IR 3304, eff 90 days after filing with the Secretary of State)*

675 IAC 14-4.2-13.5 Section R301.2.2.3; anchored stone and masonry veneer in seismic design Categories C and C_1 (Repealed)

Sec. 13.5. *(Repealed by Fire Prevention and Building Safety Commission; filed Jun 13, 2005, 3:00 p.m.: 28 IR 3304, eff 90 days after filing with the Secretary of State)*

675 IAC 14-4.2-14 Section R301.2.2.9; irregular buildings in seismic design categories D_1 and D_2 (Repealed)

Sec. 14. *(Repealed by Fire Prevention and Building Safety Commission; filed Jun 13, 2005, 3:00 p.m.: 28 IR 3304, eff 90 days after filing with the Secretary of State)*

675 IAC 14-4.2-15 Section R301.2.4; floodplain construction (Repealed)

Sec. 15. *(Repealed by Fire Prevention and Building Safety Commission; filed Jun 13, 2005, 3:00 p.m.: 28 IR 3304, eff 90 days after filing with the Secretary of State)*

675 IAC 14-4.2-15.5 Section R301.4; live load (Repealed)

Sec. 15.5. *(Repealed by Fire Prevention and Building Safety Commission; filed Jun 13, 2005, 3:00 p.m.: 28 IR 3304, eff 90 days after filing with the Secretary of State)*

675 IAC 14-4.2-16 Table R301.4; minimum uniformly distributed live loads (Repealed)

Sec. 16. *(Repealed by Fire Prevention and Building Safety Commission; filed Jun 13, 2005, 3:00 p.m.: 28 IR 3304, eff 90 days after filing with the Secretary of State)*

675 IAC 14-4.2-17 Section R302.1; exterior walls (Repealed)

Sec. 17. *(Repealed by Fire Prevention and Building Safety Commission; filed Jun 13, 2005, 3:00 p.m.: 28 IR 3304, eff 90 days after filing with the Secretary of State)*

675 IAC 14-4.2-18 Section R302.2; openings (Repealed)

Sec. 18. *(Repealed by Fire Prevention and Building Safety Commission; filed Jun 13, 2005, 3:00 p.m.: 28 IR 3304, eff 90*

days after filing with the Secretary of State)

675 IAC 14-4.2-19 Section R303.1; habitable rooms (Repealed)

Sec. 19. *(Repealed by Fire Prevention and Building Safety Commission; filed Jun 13, 2005, 3:00 p.m.: 28 IR 3304, eff 90 days after filing with the Secretary of State)*

675 IAC 14-4.2-19.5 Section R303.4; stairway illumination (Repealed)

Sec. 19.5. *(Repealed by Fire Prevention and Building Safety Commission; filed Jun 13, 2005, 3:00 p.m.: 28 IR 3304, eff 90 days after filing with the Secretary of State)*

675 IAC 14-4.2-20 Section R305.1; minimum height (Repealed)

Sec. 20. *(Repealed by Fire Prevention and Building Safety Commission; filed Jun 13, 2005, 3:00 p.m.: 28 IR 3304, eff 90 days after filing with the Secretary of State)*

675 IAC 14-4.2-20.5 Section R308.4; hazardous locations (Repealed)

Sec. 20.5. *(Repealed by Fire Prevention and Building Safety Commission; filed Jun 13, 2005, 3:00 p.m.: 28 IR 3304, eff 90 days after filing with the Secretary of State)*

675 IAC 14-4.2-21 Section R309; garages and carports (Repealed)

Sec. 21. *(Repealed by Fire Prevention and Building Safety Commission; filed Jun 13, 2005, 3:00 p.m.: 28 IR 3304, eff 90 days after filing with the Secretary of State)*

675 IAC 14-4.2-22 Section R310; emergency escape and rescue openings (Repealed)

Sec. 22. *(Repealed by Fire Prevention and Building Safety Commission; filed Jun 13, 2005, 3:00 p.m.: 28 IR 3304, eff 90 days after filing with the Secretary of State)*

675 IAC 14-4.2-23 Section R311.2; type of lock or latch (Repealed)

Sec. 23. *(Repealed by Fire Prevention and Building Safety Commission; filed Jun 13, 2005, 3:00 p.m.: 28 IR 3304, eff 90 days after filing with the Secretary of State)*

675 IAC 14-4.2-24 Section R311.5; exit facilities (Repealed)

Sec. 24. *(Repealed by Fire Prevention and Building Safety Commission; filed Jun 13, 2005, 3:00 p.m.: 28 IR 3304, eff 90 days after filing with the Secretary of State)*

675 IAC 14-4.2-25 Section R312.1, Section R312.1.1 and Section R312.1.2; general, landings for stairways and landings for doors (Repealed)

Sec. 25. *(Repealed by Fire Prevention and Building Safety Commission; filed Jun 13, 2005, 3:00 p.m.: 28 IR 3304, eff 90 days after filing with the Secretary of State)*

675 IAC 14-4.2-26 Section R314.2; treads and risers (Repealed)

Sec. 26. *(Repealed by Fire Prevention and Building Safety Commission; filed Jun 13, 2005, 3:00 p.m.: 28 IR 3304, eff 90 days after filing with the Secretary of State)*

675 IAC 14-4.2-26.5 Section R314.8; under-stair protection (Repealed)

Sec. 26.5. *(Repealed by Fire Prevention and Building Safety Commission; filed Jun 13, 2005, 3:00 p.m.: 28 IR 3304, eff 90 days after filing with the Secretary of State)*

675 IAC 14-4.2-27 Section R314.9; bulkhead enclosure stairways (Repealed)

Sec. 27. *(Repealed by Fire Prevention and Building Safety Commission; filed Jun 13, 2005, 3:00 p.m.: 28 IR 3304, eff 90 days after filing with the Secretary of State)*

675 IAC 14-4.2-27.5 Section R315.1; handrails (Repealed)

Sec. 27.5. *(Repealed by Fire Prevention and Building Safety Commission; filed Jun 13, 2005, 3:00 p.m.: 28 IR 3304, eff 90 days after filing with the Secretary of State)*

675 IAC 14-4.2-28 Section R315.2; handrail grip size (Repealed)

Sec. 28. *(Repealed by Fire Prevention and Building Safety Commission; filed Jun 13, 2005, 3:00 p.m.: 28 IR 3304, eff 90 days after filing with the Secretary of State)*

675 IAC 14-4.2-29 Section R316.1; guards required (Repealed)

Sec. 29. *(Repealed by Fire Prevention and Building Safety Commission; filed Jun 13, 2005, 3:00 p.m.: 28 IR 3304, eff 90 days after filing with the Secretary of State)*

675 IAC 14-4.2-30 Section R316.2; guard opening limitations (Repealed)

Sec. 30. *(Repealed by Fire Prevention and Building Safety Commission; filed Jun 13, 2005, 3:00 p.m.: 28 IR 3304, eff 90 days after filing with the Secretary of State)*

675 IAC 14-4.2-31 Section R317; smoke alarm (Repealed)

Sec. 31. *(Repealed by Fire Prevention and Building Safety Commission; filed Jun 13, 2005, 3:00 p.m.: 28 IR 3304, eff 90 days after filing with the Secretary of State)*

675 IAC 14-4.2-32 Section R318.2.3; attics and crawl spaces (Repealed)

Sec. 32. *(Repealed by Fire Prevention and Building Safety Commission; filed Jun 13, 2005, 3:00 p.m.: 28 IR 3304, eff 90 days after filing with the Secretary of State)*

675 IAC 14-4.2-33 Section R322.1; moisture control (Repealed)

Sec. 33. *(Repealed by Fire Prevention and Building Safety Commission; filed Jun 13, 2005, 3:00 p.m.: 28 IR 3304, eff 90 days after filing with the Secretary of State)*

675 IAC 14-4.2-34 Section R323.1; location required (Repealed)

Sec. 34. *(Repealed by Fire Prevention and Building Safety Commission; filed Jun 13, 2005, 3:00 p.m.: 28 IR 3304, eff 90 days after filing with the Secretary of State)*

675 IAC 14-4.2-35 Section R323.1.2; geographical areas (Repealed)

Sec. 35. *(Repealed by Fire Prevention and Building Safety Commission; filed Jun 13, 2005, 3:00 p.m.: 28 IR 3304, eff 90 days after filing with the Secretary of State)*

675 IAC 14-4.2-36 Section R323.1.4; wood columns (Repealed)

Sec. 36. *(Repealed by Fire Prevention and Building Safety Commission; filed Jun 13, 2005, 3:00 p.m.: 28 IR 3304, eff 90 days after filing with the Secretary of State)*

675 IAC 14-4.2-37 Section R323.2; quality mark (Repealed)

Sec. 37. *(Repealed by Fire Prevention and Building Safety Commission; filed Jun 13, 2005, 3:00 p.m.: 28 IR 3304, eff 90 days after filing with the Secretary of State)*

675 IAC 14-4.2-37.5 Section R324.1; subterranean termite control (Repealed)

Sec. 37.5. *(Repealed by Fire Prevention and Building Safety Commission; filed Jun 13, 2005, 3:00 p.m.: 28 IR 3304, eff 90 days after filing with the Secretary of State)*

675 IAC 14-4.2-38 Section R324.4; foam plastic protection (Repealed)

Sec. 38. *(Repealed by Fire Prevention and Building Safety Commission; filed Jun 13, 2005, 3:00 p.m.: 28 IR 3304, eff 90 days after filing with the Secretary of State)*

675 IAC 14-4.2-39 Section R326; accessibility (Repealed)

Sec. 39. *(Repealed by Fire Prevention and Building Safety Commission; filed Jun 13, 2005, 3:00 p.m.: 28 IR 3304, eff 90 days after filing with the Secretary of State)*

675 IAC 14-4.2-40 Section 327; flood-resistant construction (Repealed)

Sec. 40. *(Repealed by Fire Prevention and Building Safety Commission; filed Jun 13, 2005, 3:00 p.m.: 28 IR 3304, eff 90 days after filing with the Secretary of State)*

675 IAC 14-4.2-41 Section 401.1; application (Repealed)

Sec. 41. *(Repealed by Fire Prevention and Building Safety Commission; filed Jun 13, 2005, 3:00 p.m.: 28 IR 3304, eff 90 days after filing with the Secretary of State)*

675 IAC 14-4.2-42 Section R401.3; drainage (Repealed)

Sec. 42. *(Repealed by Fire Prevention and Building Safety Commission; filed Jun 13, 2005, 3:00 p.m.: 28 IR 3304, eff 90 days after filing with the Secretary of State)*

675 IAC 14-4.2-43 Section R402.1.2; wood treatment (Repealed)

Sec. 43. *(Repealed by Fire Prevention and Building Safety Commission; filed Jun 13, 2005, 3:00 p.m.: 28 IR 3304, eff 90 days after filing with the Secretary of State)*

675 IAC 14-4.2-44 Section R403.1; general (Repealed)

Sec. 44. *(Repealed by Fire Prevention and Building Safety Commission; filed Jun 13, 2005, 3:00 p.m.: 28 IR 3304, eff 90 days after filing with the Secretary of State)*

675 IAC 14-4.2-45 Table R403.1; minimum width of concrete or masonry footings (Repealed)

Sec. 45. *(Repealed by Fire Prevention and Building Safety Commission; filed Jun 13, 2005, 3:00 p.m.: 28 IR 3304, eff 90 days after filing with the Secretary of State)*

675 IAC 14-4.2-45.3 Section R403.1.1; minimum size (Repealed)

Sec. 45.3. *(Repealed by Fire Prevention and Building Safety Commission; filed Jun 13, 2005, 3:00 p.m.: 28 IR 3304, eff 90 days after filing with the Secretary of State)*

675 IAC 14-4.2-45.5 Section R403.1.2; continuous footings in seismic design categories D_1 and D_2 (Repealed)

Sec. 45.5. *(Repealed by Fire Prevention and Building Safety Commission; filed Jun 13, 2005, 3:00 p.m.: 28 IR 3304, eff 90 days after filing with the Secretary of State)*

675 IAC 14-4.2-45.6 Section R403.1.3; seismic reinforcing (Repealed)

Sec. 45.6. *(Repealed by Fire Prevention and Building Safety Commission; filed Jun 13, 2005, 3:00 p.m.: 28 IR 3304, eff 90 days after filing with the Secretary of State)*

675 IAC 14-4.2-46 Section R403.1.3.1; foundations with stemwalls (Repealed)

Sec. 46. *(Repealed by Fire Prevention and Building Safety Commission; filed Jun 13, 2005, 3:00 p.m.: 28 IR 3304, eff 90 days after filing with the Secretary of State)*

675 IAC 14-4.2-46.5 Section R403.1.3.2; slabs-on-ground with turned-down footings (Repealed)

Sec. 46.5. *(Repealed by Fire Prevention and Building Safety Commission; filed Jun 13, 2005, 3:00 p.m.: 28 IR 3304, eff 90 days after filing with the Secretary of State)*

675 IAC 14-4.2-46.6 Section R403.1.4; minimum depth (Repealed)

Sec. 46.6. *(Repealed by Fire Prevention and Building Safety Commission; filed Jun 13, 2005, 3:00 p.m.: 28 IR 3304, eff 90 days after filing with the Secretary of State)*

675 IAC 14-4.2-46.8 Section R403.1.6; foundation anchorage (Repealed)

Sec. 46.8. *(Repealed by Fire Prevention and Building Safety Commission; filed Jun 13, 2005, 3:00 p.m.: 28 IR 3304, eff 90 days after filing with the Secretary of State)*

675 IAC 14-4.2-47 Section R403.1.7.3; foundation elevation (Repealed)

Sec. 47. *(Repealed by Fire Prevention and Building Safety Commission; filed Jun 13, 2005, 3:00 p.m.: 28 IR 3304, eff 90 days after filing with the Secretary of State)*

675 IAC 14-4.2-48 Section R403.1.7.4; alternate setback and clearances (Repealed)

Sec. 48. *(Repealed by Fire Prevention and Building Safety Commission; filed Jun 13, 2005, 3:00 p.m.: 28 IR 3304, eff 90 days after filing with the Secretary of State)*

675 IAC 14-4.2-49 Section R403.1.8; foundations on expansive soils (Repealed)

Sec. 49. *(Repealed by Fire Prevention and Building Safety Commission; filed Jun 13, 2005, 3:00 p.m.: 28 IR 3304, eff 90 days after filing with the Secretary of State)*

675 IAC 14-4.2-49.1 Section R403.1.8.1; expansive soils classifications (Repealed)

Sec. 49.1. *(Repealed by Fire Prevention and Building Safety Commission; filed Jun 13, 2005, 3:00 p.m.: 28 IR 3304, eff 90 days after filing with the Secretary of State)*

675 IAC 14-4.2-49.3 Table R403.2; size of footings supporting piers and columns (Repealed)

Sec. 49.3. *(Repealed by Fire Prevention and Building Safety Commission; filed Jun 13, 2005, 3:00 p.m.: 28 IR 3304, eff 90 days after filing with the Secretary of State)*

675 IAC 14-4.2-49.5 Figure R403.3(1); insulation placement for frost-protected footings in heated buildings (Repealed)

Sec. 49.5. *(Repealed by Fire Prevention and Building Safety Commission; filed Jun 13, 2005, 3:00 p.m.: 28 IR 3304, eff 90 days after filing with the Secretary of State)*

675 IAC 14-4.2-50 Section R403.3.3; termite damage (Repealed)

Sec. 50. *(Repealed by Fire Prevention and Building Safety Commission; filed Jun 13, 2005, 3:00 p.m.: 28 IR 3304, eff 90 days after filing with the Secretary of State)*

675 IAC 14-4.2-51 Section R404.1; concrete and masonry foundation walls (Repealed)

Sec. 51. *(Repealed by Fire Prevention and Building Safety Commission; filed Jun 13, 2005, 3:00 p.m.: 28 IR 3304, eff 90 days after filing with the Secretary of State)*

675 IAC 14-4.2-52 Section R404.1.1; masonry foundation walls (Repealed)

Sec. 52. *(Repealed by Fire Prevention and Building Safety Commission; filed Jun 13, 2005, 3:00 p.m.: 28 IR 3304, eff 90 days after filing with the Secretary of State)*

675 IAC 14-4.2-53 Section R404.1.2; concrete foundation walls (Repealed)

Sec. 53. *(Repealed by Fire Prevention and Building Safety Commission; filed Jun 13, 2005, 3:00 p.m.: 28 IR 3304, eff 90 days after filing with the Secretary of State)*

675 IAC 14-4.2-53.7 Section R404.1.5; foundation wall thickness based on walls supported (Repealed)

Sec. 53.7. *(Repealed by Fire Prevention and Building Safety Commission; filed Jun 13, 2005, 3:00 p.m.: 28 IR 3304, eff 90 days after filing with the Secretary of State)*

675 IAC 14-4.2-54 Section R404.1.5.1; pier and curtain wall foundations (Repealed)

Sec. 54. *(Repealed by Fire Prevention and Building Safety Commission; filed Jun 13, 2005, 3:00 p.m.: 28 IR 3305, eff 90 days after filing with the Secretary of State)*

675 IAC 14-4.2-55 Section R404.2.1; wood grade (Repealed)

Sec. 55. *(Repealed by Fire Prevention and Building Safety Commission; filed Jun 13, 2005, 3:00 p.m.: 28 IR 3305, eff 90 days after filing with the Secretary of State)*

675 IAC 14-4.2-56 Section R404.4; insulating concrete form foundation walls (Repealed)

Sec. 56. *(Repealed by Fire Prevention and Building Safety Commission; filed Jun 13, 2005, 3:00 p.m.: 28 IR 3305, eff 90 days after filing with the Secretary of State)*

675 IAC 14-4.2-57 Section R404.4.7.2; termite hazards (Repealed)

Sec. 57. *(Repealed by Fire Prevention and Building Safety Commission; filed Jun 13, 2005, 3:00 p.m.: 28 IR 3305, eff 90 days after filing with the Secretary of State)*

675 IAC 14-4.2-58 Section R 405.2.3; drainage system (Repealed)

Sec. 58. *(Repealed by Fire Prevention and Building Safety Commission; filed Jun 13, 2005, 3:00 p.m.: 28 IR 3305, eff 90 days after filing with the Secretary of State)*

675 IAC 14-4.2-59 Section R406.2; concrete and masonry foundation waterproofing (Repealed)

Sec. 59. *(Repealed by Fire Prevention and Building Safety Commission; filed Jun 13, 2005, 3:00 p.m.: 28 IR 3305, eff 90 days after filing with the Secretary of State)*

675 IAC 14-4.2-60 Section R407.3; structural requirement (Repealed)

Sec. 60. *(Repealed by Fire Prevention and Building Safety Commission; filed Jun 13, 2005, 3:00 p.m.: 28 IR 3305, eff 90 days after filing with the Secretary of State)*

675 IAC 14-4.2-61 Section R408.2; openings for under-floor ventilation (Repealed)

Sec. 61. *(Repealed by Fire Prevention and Building Safety Commission; filed Jun 13, 2005, 3:00 p.m.: 28 IR 3305, eff 90 days after filing with the Secretary of State)*

675 IAC 14-4.2-62 Section R408.3; access (Repealed)

Sec. 62. *(Repealed by Fire Prevention and Building Safety Commission; filed Jun 13, 2005, 3:00 p.m.: 28 IR 3305, eff 90 days after filing with the Secretary of State)*

675 IAC 14-4.2-63 Section R408.6; flood resistance (Repealed)

Sec. 63. *(Repealed by Fire Prevention and Building Safety Commission; filed Jun 13, 2005, 3:00 p.m.: 28 IR 3305, eff 90 days after filing with the Secretary of State)*

675 IAC 14-4.2-64 Section R502.1; general (Repealed)

Sec. 64. *(Repealed by Fire Prevention and Building Safety Commission; filed Jun 13, 2005, 3:00 p.m.: 28 IR 3305, eff 90 days after filing with the Secretary of State)*

675 IAC 14-4.2-65 Section R502.1.4; prefabricated wood i-joists (Repealed)

Sec. 65. *(Repealed by Fire Prevention and Building Safety Commission; filed Jun 13, 2005, 3:00 p.m.: 28 IR 3305, eff 90 days after filing with the Secretary of State)*

675 IAC 14-4.2-66 Section R502.2.1; decks (Repealed)

Sec. 66. *(Repealed by Fire Prevention and Building Safety Commission; filed Jun 13, 2005, 3:00 p.m.: 28 IR 3305, eff 90 days after filing with the Secretary of State)*

675 IAC 14-4.2-67 Figure R502.2; floor construction (Repealed)

Sec. 67. *(Repealed by Fire Prevention and Building Safety Commission; filed Jun 13, 2005, 3:00 p.m.: 28 IR 3305, eff 90 days after filing with the Secretary of State)*

675 IAC 14-4.2-67.5 Table R502.3.2(2); floor joists spans for common lumber species (Repealed)

Sec. 67.5. *(Repealed by Fire Prevention and Building Safety Commission; filed Jun 13, 2005, 3:00 p.m.: 28 IR 3305, eff 90 days after filing with the Secretary of State)*

675 IAC 14-4.2-68 Section R502.3.3; floor cantilevers (Repealed)

Sec. 68. *(Repealed by Fire Prevention and Building Safety Commission; filed Jun 13, 2005, 3:00 p.m.: 28 IR 3305, eff 90 days after filing with the Secretary of State)*

675 IAC 14-4.2-69 Table R502.3.3; cantilever spans for floor joists (Repealed)

Sec. 69. *(Repealed by Fire Prevention and Building Safety Commission; filed Jun 13, 2005, 3:00 p.m.: 28 IR 3305, eff 90 days after filing with the Secretary of State)*

675 IAC 14-4.2-69.5 Section R502.8.1; sawn lumber (Repealed)

Sec. 69.5. *(Repealed by Fire Prevention and Building Safety Commission; filed Jun 13, 2005, 3:00 p.m.: 28 IR 3305, eff 90 days after filing with the Secretary of State)*

675 IAC 14-4.2-69.6 Figure R502.8; cutting, notching, and drilling (Repealed)

Sec. 69.6. *(Repealed by Fire Prevention and Building Safety Commission; filed Jun 13, 2005, 3:00 p.m.: 28 IR 3305, eff 90 days after filing with the Secretary of State)*

675 IAC 14-4.2-70 Section R502.11.1; design (Repealed)

Sec. 70. *(Repealed by Fire Prevention and Building Safety Commission; filed Jun 13, 2005, 3:00 p.m.: 28 IR 3305, eff 90 days after filing with the Secretary of State)*

675 IAC 14-4.2-71 Section R502.11.3; alterations to trusses (Repealed)

Sec. 71. *(Repealed by Fire Prevention and Building Safety Commission; filed Jun 13, 2005, 3:00 p.m.: 28 IR 3305, eff 90 days after filing with the Secretary of State)*

675 IAC 14-4.2-72 Section R502.11.4; truss design drawings (Repealed)

Sec. 72. *(Repealed by Fire Prevention and Building Safety Commission; filed Jun 13, 2005, 3:00 p.m.: 28 IR 3305, eff 90 days after filing with the Secretary of State)*

675 IAC 14-4.2-73 Section R602.1; identification (Repealed)

Sec. 73. *(Repealed by Fire Prevention and Building Safety Commission; filed Jun 13, 2005, 3:00 p.m.: 28 IR 3305, eff 90 days after filing with the Secretary of State)*

675 IAC 14-4.2-73.5 Table R602.3(1); fastener schedule for structural members (Repealed)

Sec. 73.5. *(Repealed by Fire Prevention and Building Safety Commission; filed Jun 13, 2005, 3:00 p.m.: 28 IR 3305, eff 90 days after filing with the Secretary of State)*

675 IAC 14-4.2-74 Figure R602.3(1); typical wall, floor, and roof framing (Repealed)

Sec. 74. *(Repealed by Fire Prevention and Building Safety Commission; filed Jun 13, 2005, 3:00 p.m.: 28 IR 3305, eff 90 days after filing with the Secretary of State)*

675 IAC 14-4.2-75 Figure R602.3(2); framing details (Repealed)

Sec. 75. *(Repealed by Fire Prevention and Building Safety Commission; filed Jun 13, 2005, 3:00 p.m.: 28 IR 3305, eff 90 days after filing with the Secretary of State)*

675 IAC 14-4.2-75.5 Table R602.3.1; stud spacing (Repealed)

Sec. 75.5. *(Repealed by Fire Prevention and Building Safety Commission; filed Jun 13, 2005, 3:00 p.m.: 28 IR 3305, eff 90 days after filing with the Secretary of State)*

675 IAC 14-4.2-76 Section R602.6.1; drilling and notching of top plate (Repealed)

Sec. 76. *(Repealed by Fire Prevention and Building Safety Commission; filed Jun 13, 2005, 3:00 p.m.: 28 IR 3305, eff 90 days after filing with the Secretary of State)*

675 IAC 14-4.2-77 Figure R602.6.1; top plate framing to accommodate piping (Repealed)

Sec. 77. *(Repealed by Fire Prevention and Building Safety Commission; filed Jun 13, 2005, 3:00 p.m.: 28 IR 3305, eff 90 days after filing with the Secretary of State)*

675 IAC 14-4.2-77.5 Figure R602.7.2; typical wood structural panel box header construction (Repealed)

Sec. 77.5. *(Repealed by Fire Prevention and Building Safety Commission; filed Jun 13, 2005, 3:00 p.m.: 28 IR 3305, eff 90 days after filing with the Secretary of State)*

675 IAC 14-4.2-77.6 Section R602.7; headers (Repealed)

Sec. 77.6. *(Repealed by Fire Prevention and Building Safety Commission; filed Jun 13, 2005, 3:00 p.m.: 28 IR 3305, eff 90 days after filing with the Secretary of State)*

675 IAC 14-4.2-77.7 Section R602.8.1; materials (Repealed)

Sec. 77.7. *(Repealed by Fire Prevention and Building Safety Commission; filed Jun 13, 2005, 3:00 p.m.: 28 IR 3305, eff 90 days after filing with the Secretary of State)*

675 IAC 14-4.2-78 Table R602.10.3; wall bracing (Repealed)

Sec. 78. *(Repealed by Fire Prevention and Building Safety Commission; filed Jun 13, 2005, 3:00 p.m.: 28 IR 3305, eff 90 days after filing with the Secretary of State)*

675 IAC 14-4.2-78.5 Table R603.6(5); header to king stud connection requirements (Repealed)

Sec. 78.5. *(Repealed by Fire Prevention and Building Safety Commission; filed Jun 13, 2005, 3:00 p.m.: 28 IR 3305, eff 90 days after filing with the Secretary of State)*

675 IAC 14-4.2-79 Section R604.1; identification and grade (Repealed)

Sec. 79. *(Repealed by Fire Prevention and Building Safety Commission; filed Jun 13, 2005, 3:00 p.m.: 28 IR 3305, eff 90 days after filing with the Secretary of State)*

675 IAC 14-4.2-80 Section R605.1; identification and grade (Repealed)

Sec. 80. *(Repealed by Fire Prevention and Building Safety Commission; filed Jun 13, 2005, 3:00 p.m.: 28 IR 3305, eff 90 days after filing with the Secretary of State)*

675 IAC 14-4.2-81 Section R606.1.1; professional registration not required (Repealed)

Sec. 81. *(Repealed by Fire Prevention and Building Safety Commission; filed Jun 13, 2005, 3:00 p.m.: 28 IR 3305, eff 90 days after filing with the Secretary of State)*

675 IAC 14-4.2-81.2 Section R606.2; thickness of masonry (Repealed)

Sec. 81.2. *(Repealed by Fire Prevention and Building Safety Commission; filed Jun 13, 2005, 3:00 p.m.: 28 IR 3305, eff 90 days after filing with the Secretary of State)*

675 IAC 14-4.2-81.3 Section R606.2.1; minimum thickness (Repealed)

Sec. 81.3. *(Repealed by Fire Prevention and Building Safety Commission; filed Jun 13, 2005, 3:00 p.m.: 28 IR 3305, eff 90 days after filing with the Secretary of State)*

675 IAC 14-4.2-81.7 Section R606.10; anchorage (Repealed)

Sec. 81.7. *(Repealed by Fire Prevention and Building Safety Commission; filed Jun 13, 2005, 3:00 p.m.: 28 IR 3305, eff 90 days after filing with the Secretary of State)*

675 IAC 14-4.2-82 Section R606.11; seismic requirements (Repealed)

Sec. 82. *(Repealed by Fire Prevention and Building Safety Commission; filed Jun 13, 2005, 3:00 p.m.: 28 IR 3305, eff 90 days after filing with the Secretary of State)*

675 IAC 14-4.2-83 Section R606.11.2; seismic design Category C (Repealed)

Sec. 83. *(Repealed by Fire Prevention and Building Safety Commission; filed Jun 13, 2005, 3:00 p.m.: 28 IR 3305, eff 90 days after filing with the Secretary of State)*

675 IAC 14-4.2-84 Figure R606.10(2); requirements for reinforced grouted masonry construction in Seismic Design Category C (Repealed)

Sec. 84. *(Repealed by Fire Prevention and Building Safety Commission; filed Jun 13, 2005, 3:00 p.m.: 28 IR 3305, eff 90 days after filing with the Secretary of State)*

675 IAC 14-4.2-84.5 Section R607.1.2; masonry in seismic design categories A, B, C and C_1 (Repealed)

Sec. 84.5. *(Repealed by Fire Prevention and Building Safety Commission; filed Jun 13, 2005, 3:00 p.m.: 28 IR 3305, eff 90 days after filing with the Secretary of State)*

675 IAC 14-4.2-85 Section R609.1.5; cleanouts (Repealed)

Sec. 85. *(Repealed by Fire Prevention and Building Safety Commission; filed Jun 13, 2005, 3:00 p.m.: 28 IR 3305, eff 90 days after filing with the Secretary of State)*

675 IAC 14-4.2-85.5 Section R609.2.2; grout spaces (Repealed)

Sec. 85.5. *(Repealed by Fire Prevention and Building Safety Commission; filed Jun 13, 2005, 3:00 p.m.: 28 IR 3305, eff 90 days after filing with the Secretary of State)*

675 IAC 14-4.2-86 Section R609.4.1; construction (Repealed)

Sec. 86. *(Repealed by Fire Prevention and Building Safety Commission; filed Jun 13, 2005, 3:00 p.m.: 28 IR 3305, eff 90 days after filing with the Secretary of State)*

675 IAC 14-4.2-87 Section R611.1; general (Repealed)

Sec. 87. *(Repealed by Fire Prevention and Building Safety Commission; filed Jun 13, 2005, 3:00 p.m.: 28 IR 3305, eff 90 days after filing with the Secretary of State)*

675 IAC 14-4.2-88 Section R702.4.2; gypsum backer (Repealed)

Sec. 88. *(Repealed by Fire Prevention and Building Safety Commission; filed Jun 13, 2005, 3:00 p.m.: 28 IR 3305, eff 90 days after filing with the Secretary of State)*

675 IAC 14-4.2-89 Section R 703.4; attachments (Repealed)

Sec. 89. *(Repealed by Fire Prevention and Building Safety Commission; filed Jun 13, 2005, 3:00 p.m.: 28 IR 3305, eff 90 days after filing with the Secretary of State)*

675 IAC 14-4.2-89.2 Table R703.4; weather-resistant siding attachment and minimum thickness (Repealed)

Sec. 89.2. *(Repealed by Fire Prevention and Building Safety Commission; filed Jun 13, 2005, 3:00 p.m.: 28 IR 3305, eff 90 days after filing with the Secretary of State)*

675 IAC 14-4.2-89.5 Section R703.7; stone and masonry veneer, general (Repealed)

Sec. 89.5. *(Repealed by Fire Prevention and Building Safety Commission; filed Jun 13, 2005, 3:00 p.m.: 28 IR 3305, eff 90 days after filing with the Secretary of State)*

675 IAC 14-4.2-89.6 Section R703.7.4.3; mortar or grout filled (Repealed)

Sec. 89.6. *(Repealed by Fire Prevention and Building Safety Commission; filed Jun 13, 2005, 3:00 p.m.: 28 IR 3305, eff 90 days after filing with the Secretary of State)*

675 IAC 14-4.2-89.7 Section R703.3.5; flashing (Repealed)

Sec. 89.7. *(Repealed by Fire Prevention and Building Safety Commission; filed Feb 23, 2004, 8:34 a.m.: 27 IR 2278)*

675 IAC 14-4.2-89.8 Section R703.7.6; weepholes (Repealed)

Sec. 89.8. *(Repealed by Fire Prevention and Building Safety Commission; filed Jun 13, 2005, 3:00 p.m.: 28 IR 3305, eff 90 days after filing with the Secretary of State)*

675 IAC 14-4.2-89.9 Sections R703.7.2.1; support by a steel angle; R703.7.2.2; support by roof construction; and R703.7.4.2; air space (Repealed)

Sec. 89.9. *(Repealed by Fire Prevention and Building Safety Commission; filed Jun 13, 2005, 3:00 p.m.: 28 IR 3305, eff 90 days after filing with the Secretary of State)*

675 IAC 14-4.2-89.10 Section R703.7.2.2; support by roof construction (Repealed)

Sec. 89.10. *(Repealed by Fire Prevention and Building Safety Commission; filed Feb 23, 2004, 8:34 a.m.: 27 IR 2278)*

675 IAC 14-4.2-89.11 Section R703.8; flashing (Repealed)

Sec. 89.11. *(Repealed by Fire Prevention and Building Safety Commission; filed Feb 23, 2004, 8:34 a.m.: 27 IR 2278)*

675 IAC 14-4.2-90 Section R703.8; flashing (Repealed)

Sec. 90. *(Repealed by Fire Prevention and Building Safety Commission; filed Jun 13, 2005, 3:00 p.m.: 28 IR 3305, eff 90 days after filing with the Secretary of State)*

675 IAC 14-4.2-91 Section R802.1; identification and grade (Repealed)

Sec. 91. *(Repealed by Fire Prevention and Building Safety Commission; filed Jun 13, 2005, 3:00 p.m.: 28 IR 3305, eff 90 days after filing with the Secretary of State)*

675 IAC 14-4.2-92 Section R802.10.1; truss design drawings (Repealed)

Sec. 92. *(Repealed by Fire Prevention and Building Safety Commission; filed Jun 13, 2005, 3:00 p.m.: 28 IR 3305, eff 90 days after filing with the Secretary of State)*

675 IAC 14-4.2-93 Section R802.10.2; design (Repealed)

Sec. 93. *(Repealed by Fire Prevention and Building Safety Commission; filed Jun 13, 2005, 3:00 p.m.: 28 IR 3305, eff 90 days after filing with the Secretary of State)*

675 IAC 14-4.2-94 Section R802.10.3; bracing (Repealed)

Sec. 94. *(Repealed by Fire Prevention and Building Safety Commission; filed Jun 13, 2005, 3:00 p.m.: 28 IR 3305, eff 90 days after filing with the Secretary of State)*

675 IAC 14-4.2-95 Section R802.10.4; alterations to trusses (Repealed)

Sec. 95. *(Repealed by Fire Prevention and Building Safety Commission; filed Jun 13, 2005, 3:00 p.m.: 28 IR 3305, eff 90 days after filing with the Secretary of State)*

675 IAC 14-4.2-96 Section R802.11; roof tie-down (Repealed)

Sec. 96. *(Repealed by Fire Prevention and Building Safety Commission; filed Jun 13, 2005, 3:00 p.m.: 28 IR 3305, eff 90 days after filing with the Secretary of State)*

675 IAC 14-4.2-96.2 TABLE R802.11 (Repealed)

Sec. 96.2. *(Repealed by Fire Prevention and Building Safety Commission; filed Jun 13, 2005, 3:00 p.m.: 28 IR 3305, eff 90 days after filing with the Secretary of State)*

675 IAC 14-4.2-97 Section R803.2.1; identification and grade (Repealed)

Sec. 97. *(Repealed by Fire Prevention and Building Safety Commission; filed Jun 13, 2005, 3:00 p.m.: 28 IR 3305, eff 90 days after filing with the Secretary of State)*

675 IAC 14-4.2-97.5 Section R806.1; ventilation required (Repealed)

Sec. 97.5. *(Repealed by Fire Prevention and Building Safety Commission; filed Jun 13, 2005, 3:00 p.m.: 28 IR 3305, eff 90 days after filing with the Secretary of State)*

675 IAC 14-4.2-97.9 Section R808.1; combustible insulation (Repealed)

Sec. 97.9. *(Repealed by Fire Prevention and Building Safety Commission; filed Jun 13, 2005, 3:00 p.m.: 28 IR 3305, eff 90 days after filing with the Secretary of State)*

675 IAC 14-4.2-98 Section R903.4.1; overflow drains and scuppers (Repealed)

Sec. 98. *(Repealed by Fire Prevention and Building Safety Commission; filed Jun 13, 2005, 3:00 p.m.: 28 IR 3305, eff 90 days after filing with the Secretary of State)*

675 IAC 14-4.2-99 Section R904.3; material specifications and physical characteristics (Repealed)

Sec. 99. *(Repealed by Fire Prevention and Building Safety Commission; filed Jun 13, 2005, 3:00 p.m.: 28 IR 3305, eff 90 days after filing with the Secretary of State)*

675 IAC 14-4.2-100 Section R907.1; general (Repealed)

Sec. 100. *(Repealed by Fire Prevention and Building Safety Commission; filed Jun 13, 2005, 3:00 p.m.: 28 IR 3305, eff 90 days after filing with the Secretary of State)*

675 IAC 14-4.2-101 Section R907.3; recovering versus replacement (Repealed)

Sec. 101. *(Repealed by Fire Prevention and Building Safety Commission; filed Jun 13, 2005, 3:00 p.m.: 28 IR 3305, eff 90 days after filing with the Secretary of State)*

675 IAC 14-4.2-102 Section R1001.6; termination (Repealed)

Sec. 102. *(Repealed by Fire Prevention and Building Safety Commission; filed Jun 13, 2005, 3:00 p.m.: 28 IR 3305, eff 90 days after filing with the Secretary of State)*

675 IAC 14-4.2-103 Figure R1001.6; chimney termination (Repealed)

Sec. 103. *(Repealed by Fire Prevention and Building Safety Commission; filed Jun 13, 2005, 3:00 p.m.: 28 IR 3305, eff 90 days after filing with the Secretary of State)*

675 IAC 14-4.2-104 Section R1001.6.1; spark arrestors (Repealed)

Sec. 104. *(Repealed by Fire Prevention and Building Safety Commission; filed Jun 13, 2005, 3:00 p.m.: 28 IR 3305, eff 90 days after filing with the Secretary of State)*

675 IAC 14-4.2-105 Section R1003.3; seismic reinforcing (Repealed)

Sec. 105. *(Repealed by Fire Prevention and Building Safety Commission; filed Jun 13, 2005, 3:00 p.m.: 28 IR 3305, eff 90 days after filing with the Secretary of State)*

675 IAC 14-4.2-105.5 Section R1003; seismic anchorage (Repealed)

Sec. 105.5. *(Repealed by Fire Prevention and Building Safety Commission; filed Jun 13, 2005, 3:00 p.m.: 28 IR 3305, eff 90 days after filing with the Secretary of State)*

675 IAC 14-4.2-106 Section R1005.1; exterior air (Repealed)

Sec. 106. *(Repealed by Fire Prevention and Building Safety Commission; filed Jun 13, 2005, 3:00 p.m.: 28 IR 3305, eff 90 days after filing with the Secretary of State)*

675 IAC 14-4.2-107 Chapter 11; energy efficiency (Repealed)

Sec. 107. *(Repealed by Fire Prevention and Building Safety Commission; filed Jun 13, 2005, 3:00 p.m.: 28 IR 3305, eff 90 days after filing with the Secretary of State)*

675 IAC 14-4.2-108 Section M1201.1; scope (Repealed)

Sec. 108. *(Repealed by Fire Prevention and Building Safety Commission; filed Jun 13, 2005, 3:00 p.m.: 28 IR 3305, eff 90 days after filing with the Secretary of State)*

675 IAC 14-4.2-109 Section M1201.2; application (Repealed)

Sec. 109. *(Repealed by Fire Prevention and Building Safety Commission; filed Jun 13, 2005, 3:00 p.m.: 28 IR 3305, eff 90 days after filing with the Secretary of State)*

675 IAC 14-4.2-110 Section M1202; existing mechanical systems (Repealed)

Sec. 110. *(Repealed by Fire Prevention and Building Safety Commission; filed Jun 13, 2005, 3:00 p.m.: 28 IR 3305, eff 90 days after filing with the Secretary of State)*

675 IAC 14-4.2-111 Section M1303.1; label information (Repealed)

Sec. 111. *(Repealed by Fire Prevention and Building Safety Commission; filed Jun 13, 2005, 3:00 p.m.: 28 IR 3305, eff 90 days after filing with the Secretary of State)*

675 IAC 14-4.2-112 Section M1307.3.1; protection from impact (Repealed)

Sec. 112. *(Repealed by Fire Prevention and Building Safety Commission; filed Jun 13, 2005, 3:00 p.m.: 28 IR 3305, eff 90 days after filing with the Secretary of State)*

675 IAC 14-4.2-112.5 Section M1411.3.1; auxiliary and secondary drain systems (Repealed)

Sec. 112.5. *(Repealed by Fire Prevention and Building Safety Commission; filed Jun 13, 2005, 3:00 p.m.: 28 IR 3305, eff 90 days after filing with the Secretary of State)*

675 IAC 14-4.2-113 Section M1501.3; length limitation (Repealed)

Sec. 113. *(Repealed by Fire Prevention and Building Safety Commission; filed Jun 13, 2005, 3:00 p.m.: 28 IR 3305, eff 90 days after filing with the Secretary of State)*

675 IAC 14-4.2-114 Section M1503.1; installation of microwave oven over a cooking appliance (Repealed)

Sec. 114. *(Repealed by Fire Prevention and Building Safety Commission; filed Jun 13, 2005, 3:00 p.m.: 28 IR 3305, eff 90 days after filing with the Secretary of State)*

675 IAC 14-4.2-115 Chapter 19; special fuel-burning equipment (Repealed)

Sec. 115. *(Repealed by Fire Prevention and Building Safety Commission; filed Jun 13, 2005, 3:00 p.m.: 28 IR 3305, eff 90 days after filing with the Secretary of State)*

675 IAC 14-4.2-116 Section M2001; boilers (Repealed)

Sec. 116. *(Repealed by Fire Prevention and Building Safety Commission; filed Jun 13, 2005, 3:00 p.m.: 28 IR 3305, eff 90 days after filing with the Secretary of State)*

675 IAC 14-4.2-117 Section M2005.5; anchorage of water heaters in seismic design Category C_1 (Repealed)

Sec. 117. *(Repealed by Fire Prevention and Building Safety Commission; filed Jun 13, 2005, 3:00 p.m.: 28 IR 3305, eff 90 days after filing with the Secretary of State)*

675 IAC 14-4.2-118 Section M2006; pool heaters (Repealed)

Sec. 118. *(Repealed by Fire Prevention and Building Safety Commission; filed Jun 13, 2005, 3:00 p.m.: 28 IR 3305, eff 90 days after filing with the Secretary of State)*

675 IAC 14-4.2-119 Section M2201.3; underground tanks (Repealed)

Sec. 119. *(Repealed by Fire Prevention and Building Safety Commission; filed Jun 13, 2005, 3:00 p.m.: 28 IR 3305, eff 90 days after filing with the Secretary of State)*

675 IAC 14-4.2-120 Section M2301.1; general (Repealed)

Sec. 120. *(Repealed by Fire Prevention and Building Safety Commission; filed Jun 13, 2005, 3:00 p.m.: 28 IR 3305, eff 90 days after filing with the Secretary of State)*

675 IAC 14-4.2-121 Section G2401.1; application (Repealed)

Sec. 121. *(Repealed by Fire Prevention and Building Safety Commission; filed Jun 13, 2005, 3:00 p.m.: 28 IR 3305, eff 90 days after filing with the Secretary of State)*

675 IAC 14-4.2-122 Section G2403; general definitions (Repealed)

Sec. 122. *(Repealed by Fire Prevention and Building Safety Commission; filed Jun 13, 2005, 3:00 p.m.: 28 IR 3305, eff 90 days after filing with the Secretary of State)*

675 IAC 14-4.2-123 Section G2404.7; flood hazard (Repealed)

Sec. 123. *(Repealed by Fire Prevention and Building Safety Commission; filed Jun 13, 2005, 3:00 p.m.: 28 IR 3305, eff 90 days after filing with the Secretary of State)*

675 IAC 14-4.2-124 Section G2405.1; structural safety (Repealed)

Sec. 124. *(Repealed by Fire Prevention and Building Safety Commission; filed Jun 13, 2005, 3:00 p.m.: 28 IR 3305, eff 90 days after filing with the Secretary of State)*

675 IAC 14-4.2-125 Section G2407.4 and Section G2407.5; process air and ventilation air (Repealed)

Sec. 125. *(Repealed by Fire Prevention and Building Safety Commission; filed Jun 13, 2005, 3:00 p.m.: 28 IR 3305, eff 90 days after filing with the Secretary of State)*

675 IAC 14-4.2-126 Section G2408.1; general (Repealed)

Sec. 126. *(Repealed by Fire Prevention and Building Safety Commission; filed Jun 13, 2005, 3:00 p.m.: 28 IR 3305, eff 90 days after filing with the Secretary of State)*

675 IAC 14-4.2-127 Section G2408.3; private garages (Repealed)

Sec. 127. *(Repealed by Fire Prevention and Building Safety Commission; filed Jun 13, 2005, 3:00 p.m.: 28 IR 3305, eff 90 days after filing with the Secretary of State)*

675 IAC 14-4.2-128 Section G2411.1; scope (Repealed)

Sec. 128. *(Repealed by Fire Prevention and Building Safety Commission; filed Jun 13, 2005, 3:00 p.m.: 28 IR 3305, eff 90 days after filing with the Secretary of State)*

675 IAC 14-4.2-129 Section G2411.1.1; utility piping systems located within buildings (Repealed)

Sec. 129. *(Repealed by Fire Prevention and Building Safety Commission; filed Jun 13, 2005, 3:00 p.m.: 28 IR 3305, eff 90 days after filing with the Secretary of State)*

675 IAC 14-4.2-130 Section G2412.2; maximum gas demand (Repealed)

Sec. 130. *(Repealed by Fire Prevention and Building Safety Commission; filed Jun 13, 2005, 3:00 p.m.: 28 IR 3305, eff 90 days after filing with the Secretary of State)*

675 IAC 14-4.2-131 Section G2413.1; material application (Repealed)

Sec. 131. *(Repealed by Fire Prevention and Building Safety Commission; filed Jun 13, 2005, 3:00 p.m.: 28 IR 3305, eff 90 days after filing with the Secretary of State)*

675 IAC 14-4.2-132 Section G2413.3; other materials (Repealed)

Sec. 132. *(Repealed by Fire Prevention and Building Safety Commission; filed Jun 13, 2005, 3:00 p.m.: 28 IR 3305, eff 90 days after filing with the Secretary of State)*

675 IAC 14-4.2-133 Section G2414.3; piping in concealed locations (Repealed)

Sec. 133. *(Repealed by Fire Prevention and Building Safety Commission; filed Jun 13, 2005, 3:00 p.m.: 28 IR 3305, eff 90 days after filing with the Secretary of State)*

675 IAC 14-4.2-134 Section G2414.8; protection against corrosion (Repealed)

Sec. 134. *(Repealed by Fire Prevention and Building Safety Commission; filed Jun 13, 2005, 3:00 p.m.: 28 IR 3305, eff 90 days after filing with the Secretary of State)*

675 IAC 14-4.2-135 Section G2414.9.1; individual outside appliances (Repealed)

Sec. 135. *(Repealed by Fire Prevention and Building Safety Commission; filed Jun 13, 2005, 3:00 p.m.: 28 IR 3305, eff 90 days after filing with the Secretary of State)*

675 IAC 14-4.2-136 Section G2414.16; testing of piping (Repealed)

Sec. 136. *(Repealed by Fire Prevention and Building Safety Commission; filed Jun 13, 2005, 3:00 p.m.: 28 IR 3305, eff 90 days after filing with the Secretary of State)*

675 IAC 14-4.2-137 Section G2416; inspection, testing, and purging (Repealed)

Sec. 137. *(Repealed by Fire Prevention and Building Safety Commission; filed Jun 13, 2005, 3:00 p.m.: 28 IR 3305, eff 90 days after filing with the Secretary of State)*

675 IAC 14-4.2-138 Section G2416.6.2; before turning gas on (Repealed)

Sec. 138. *(Repealed by Fire Prevention and Building Safety Commission; filed Jun 13, 2005, 3:00 p.m.: 28 IR 3305, eff 90 days after filing with the Secretary of State)*

675 IAC 14-4.2-139 Section G2416.6.3; test for leakage (Repealed)

Sec. 139. *(Repealed by Fire Prevention and Building Safety Commission; filed Jun 13, 2005, 3:00 p.m.: 28 IR 3305, eff 90 days after filing with the Secretary of State)*

675 IAC 14-4.2-140 Section G2416.7.1; removal from service (Repealed)

Sec. 140. *(Repealed by Fire Prevention and Building Safety Commission; filed Jun 13, 2005, 3:00 p.m.: 28 IR 3305, eff 90 days after filing with the Secretary of State)*

675 IAC 14-4.2-141 Section G2419.2; meter valve (Repealed)

Sec. 141. *(Repealed by Fire Prevention and Building Safety Commission; filed Jun 13, 2005, 3:00 p.m.: 28 IR 3305, eff 90 days after filing with the Secretary of State)*

675 IAC 14-4.2-142 Section G2422; CNG gas-dispensing systems (Repealed)

Sec. 142. *(Repealed by Fire Prevention and Building Safety Commission; filed Jun 13, 2005, 3:00 p.m.: 28 IR 3305, eff 90 days after filing with the Secretary of State)*

675 IAC 14-4.2-143 Section G2424.1; scope (Repealed)

Sec. 143. *(Repealed by Fire Prevention and Building Safety Commission; filed Jun 13, 2005, 3:00 p.m.: 28 IR 3305, eff 90 days after filing with the Secretary of State)*

675 IAC 14-4.2-144 Section G2426.8; venting system location (Repealed)

Sec. 144. *(Repealed by Fire Prevention and Building Safety Commission; filed Jun 13, 2005, 3:00 p.m.: 28 IR 3305, eff 90 days after filing with the Secretary of State)*

675 IAC 14-4.2-145 Section G2426.9; condensation drain (Repealed)

Sec. 145. *(Repealed by Fire Prevention and Building Safety Commission; filed Jun 13, 2005, 3:00 p.m.: 28 IR 3305, eff 90 days after filing with the Secretary of State)*

675 IAC 14-4.2-146 Section G2426.6.10; marking (Repealed)

Sec. 146. *(Repealed by Fire Prevention and Building Safety Commission; filed Jun 13, 2005, 3:00 p.m.: 28 IR 3305, eff 90 days after filing with the Secretary of State)*

675 IAC 14-4.2-147 Section G2427.1; definitions (Repealed)

Sec. 147. *(Repealed by Fire Prevention and Building Safety Commission; filed Jun 13, 2005, 3:00 p.m.: 28 IR 3305, eff 90 days after filing with the Secretary of State)*

675 IAC 14-4.2-148 Section G2430.1; scope (Repealed)

Sec. 148. *(Repealed by Fire Prevention and Building Safety Commission; filed Jun 13, 2005, 3:00 p.m.: 28 IR 3305, eff 90 days after filing with the Secretary of State)*

675 IAC 14-4.2-149 Section G2436; clothes dryer (Repealed)

Sec. 149. *(Repealed by Fire Prevention and Building Safety Commission; filed Jun 13, 2005, 3:00 p.m.: 28 IR 3305, eff 90 days after filing with the Secretary of State)*

675 IAC 14-4.2-150 Section G2437.5.1; maximum length (Repealed)

Sec. 150. *(Repealed by Fire Prevention and Building Safety Commission; filed Jun 13, 2005, 3:00 p.m.: 28 IR 3305, eff 90 days after filing with the Secretary of State)*

675 IAC 14-4.2-151 Section G2438; sauna heaters (Repealed)

Sec. 151. *(Repealed by Fire Prevention and Building Safety Commission; filed Jun 13, 2005, 3:00 p.m.: 28 IR 3305, eff 90 days after filing with the Secretary of State)*

675 IAC 14-4.2-152 Section G2439; pool and spa heaters (Repealed)

Sec. 152. *(Repealed by Fire Prevention and Building Safety Commission; filed Jun 13, 2005, 3:00 p.m.: 28 IR 3305, eff 90 days after filing with the Secretary of State)*

675 IAC 14-4.2-153 Section G2445; cooking appliances (Repealed)

Sec. 153. *(Repealed by Fire Prevention and Building Safety Commission; filed Jun 13, 2005, 3:00 p.m.: 28 IR 3305, eff 90 days after filing with the Secretary of State)*

675 IAC 14-4.2-154 Section G2446.1; general (Repealed)

Sec. 154. *(Repealed by Fire Prevention and Building Safety Commission; filed Jun 13, 2005, 3:00 p.m.: 28 IR 3305, eff 90 days after filing with the Secretary of State)*

675 IAC 14-4.2-155 Section G2450.1; general (Repealed)

Sec. 155. *(Repealed by Fire Prevention and Building Safety Commission; filed Jun 13, 2005, 3:00 p.m.: 28 IR 3305, eff 90 days after filing with the Secretary of State)*

675 IAC 14-4.2-156 Section P2501; general (Repealed)

Sec. 156. *(Repealed by Fire Prevention and Building Safety Commission; filed Jun 13, 2005, 3:00 p.m.: 28 IR 3305, eff 90 days after filing with the Secretary of State)*

675 IAC 14-4.2-157 Section P2502; existing plumbing systems (Repealed)

Sec. 157. *(Repealed by Fire Prevention and Building Safety Commission; filed Jun 13, 2005, 3:00 p.m.: 28 IR 3305, eff 90 days after filing with the Secretary of State)*

675 IAC 14-4.2-158 Section P2503.1; inspection required (Repealed)

Sec. 158. *(Repealed by Fire Prevention and Building Safety Commission; filed Jun 13, 2005, 3:00 p.m.: 28 IR 3305, eff 90 days after filing with the Secretary of State)*

675 IAC 14-4.2-159 Section P2503.2; concealment (Repealed)

Sec. 159. *(Repealed by Fire Prevention and Building Safety Commission; filed Jun 13, 2005, 3:00 p.m.: 28 IR 3305, eff 90 days after filing with the Secretary of State)*

675 IAC 14-4.2-160 Section P2503.3; responsibility of permitter (Repealed)

Sec. 160. *(Repealed by Fire Prevention and Building Safety Commission; filed Jun 13, 2005, 3:00 p.m.: 28 IR 3305, eff 90 days after filing with the Secretary of State)*

675 IAC 14-4.2-161 Section P2503.5.2; finished plumbing (Repealed)

Sec. 161. *(Repealed by Fire Prevention and Building Safety Commission; filed Jun 13, 2005, 3:00 p.m.: 28 IR 3305, eff 90 days after filing with the Secretary of State)*

675 IAC 14-4.2-162 Section P2503.7; inspection and testing of backflow prevention devices (Repealed)

Sec. 162. *(Repealed by Fire Prevention and Building Safety Commission; filed Jun 13, 2005, 3:00 p.m.: 28 IR 3305, eff 90 days after filing with the Secretary of State)*

675 IAC 14-4.2-163 Section P2503.7.1; inspections (Repealed)

Sec. 163. *(Repealed by Fire Prevention and Building Safety Commission; filed Jun 13, 2005, 3:00 p.m.: 28 IR 3305, eff 90 days after filing with the Secretary of State)*

675 IAC 14-4.2-164 Section P2503.7.2; testing (Repealed)

Sec. 164. *(Repealed by Fire Prevention and Building Safety Commission; filed Jun 13, 2005, 3:00 p.m.: 28 IR 3305, eff 90 days after filing with the Secretary of State)*

675 IAC 14-4.2-165 Section P2603.1; protection against physical damage (Repealed)

Sec. 165. *(Repealed by Fire Prevention and Building Safety Commission; filed Jun 13, 2005, 3:00 p.m.: 28 IR 3305, eff 90 days after filing with the Secretary of State)*

675 IAC 14-4.2-166 Section P2603.2.1; protection against physical damage (Repealed)

Sec. 166. *(Repealed by Fire Prevention and Building Safety Commission; filed Jun 13, 2005, 3:00 p.m.: 28 IR 3305, eff 90 days after filing with the Secretary of State)*

675 IAC 14-4.2-167 Section P2603.5; pipes through footings or foundation walls (Repealed)

Sec. 167. *(Repealed by Fire Prevention and Building Safety Commission; filed Jun 13, 2005, 3:00 p.m.: 28 IR 3305, eff 90 days after filing with the Secretary of State)*

675 IAC 14-4.2-168 Section P2604.5; inspection (Repealed)

Sec. 168. *(Repealed by Fire Prevention and Building Safety Commission; filed Jun 13, 2005, 3:00 p.m.: 28 IR 3305, eff 90 days after filing with the Secretary of State)*

675 IAC 14-4.2-169 Section P2706.2; standpipes (Repealed)

Sec. 169. *(Repealed by Fire Prevention and Building Safety Commission; filed Jun 13, 2005, 3:00 p.m.: 28 IR 3305, eff 90 days after filing with the Secretary of State)*

675 IAC 14-4.2-170 Section P2706.2.1; laundry tray connection (Repealed)

Sec. 170. *(Repealed by Fire Prevention and Building Safety Commission; filed Jun 13, 2005, 3:00 p.m.: 28 IR 3305, eff 90 days after filing with the Secretary of State)*

675 IAC 14-4.2-171 Section P2717.3; sink, dishwasher, and food grinder (Repealed)

Sec. 171. *(Repealed by Fire Prevention and Building Safety Commission; filed Jun 13, 2005, 3:00 p.m.: 28 IR 3305, eff 90 days after filing with the Secretary of State)*

675 IAC 14-4.2-171.5 Section P2801.5; required pan (Repealed)

Sec. 171.5. *(Repealed by Fire Prevention and Building Safety Commission; filed Jun 13, 2005, 3:00 p.m.: 28 IR 3305, eff 90 days after filing with the Secretary of State)*

675 IAC 14-4.2-172 Section P2802.2; scald protection (Repealed)

Sec. 172. *(Repealed by Fire Prevention and Building Safety Commission; filed Jun 13, 2005, 3:00 p.m.: 28 IR 3305, eff 90 days after filing with the Secretary of State)*

675 IAC 14-4.2-173 Section P2901.1; potable water required (Repealed)

Sec. 173. *(Repealed by Fire Prevention and Building Safety Commission; filed Jun 13, 2005, 3:00 p.m.: 28 IR 3305, eff 90 days after filing with the Secretary of State)*

675 IAC 14-4.2-174 Section P2903.8.5; support and protection (Repealed)

Sec. 174. *(Repealed by Fire Prevention and Building Safety Commission; filed Jun 13, 2005, 3:00 p.m.: 28 IR 3305, eff 90 days after filing with the Secretary of State)*

675 IAC 14-4.2-174.5 Section P2903.5; water hammer (Repealed)

Sec. 174.5. *(Repealed by Fire Prevention and Building Safety Commission; filed Jun 13, 2005, 3:00 p.m.: 28 IR 3305, eff 90 days after filing with the Secretary of State)*

675 IAC 14-4.2-175 Section P2903.9.1; service valve (Repealed)

Sec. 175. *(Repealed by Fire Prevention and Building Safety Commission; filed Jun 13, 2005, 3:00 p.m.: 28 IR 3305, eff 90 days after filing with the Secretary of State)*

675 IAC 14-4.2-176 Section P2907; drinking water treatment units (Repealed)

Sec. 176. *(Repealed by Fire Prevention and Building Safety Commission; filed Jun 13, 2005, 3:00 p.m.: 28 IR 3305, eff 90 days after filing with the Secretary of State)*

675 IAC 14-4.2-177 Section P3101.4 and SECTION P3103.2; extension outside a structure and frost closure (Repealed)

Sec. 177. *(Repealed by Fire Prevention and Building Safety Commission; filed Jun 13, 2005, 3:00 p.m.: 28 IR 3305, eff 90 days after filing with the Secretary of State)*

675 IAC 14-4.2-177.5 Section P3103.1; roof extension (Repealed)

Sec. 177.5. *(Repealed by Fire Prevention and Building Safety Commission; filed Jun 13, 2005, 3:00 p.m.: 28 IR 3305, eff 90 days after filing with the Secretary of State)*

675 IAC 14-4.2-178 Table P3105.1; maximum distance of fixture trap from vent (Repealed)

Sec. 178. *(Repealed by Fire Prevention and Building Safety Commission; filed Jun 13, 2005, 3:00 p.m.: 28 IR 3305, eff 90 days after filing with the Secretary of State)*

675 IAC 14-4.2-179 Section P3201.4; building traps (Repealed)

Sec. 179. *(Repealed by Fire Prevention and Building Safety Commission; filed Jun 13, 2005, 3:00 p.m.: 28 IR 3305, eff 90 days after filing with the Secretary of State)*

675 IAC 14-4.2-180 Table P3201.7; size of traps and trap arms for plumbing fixtures (Repealed)

Sec. 180. *(Repealed by Fire Prevention and Building Safety Commission; filed Jun 13, 2005, 3:00 p.m.: 28 IR 3305, eff 90 days after filing with the Secretary of State)*

675 IAC 14-4.2-181 Section E3301.2; scope (Repealed)

Sec. 181. *(Repealed by Fire Prevention and Building Safety Commission; filed Jun 13, 2005, 3:00 p.m.: 28 IR 3305, eff 90 days after filing with the Secretary of State)*

675 IAC 14-4.2-181.1 Section E3301.2; scope (Repealed)

Sec. 181.1. *(Repealed by Fire Prevention and Building Safety Commission; filed Jun 13, 2005, 3:00 p.m.: 28 IR 3305, eff 90 days after filing with the Secretary of State)*

675 IAC 14-4.2-182 Section E3301.3; not covered (Repealed)

Sec. 182. *(Repealed by Fire Prevention and Building Safety Commission; filed Jun 13, 2005, 3:00 p.m.: 28 IR 3305, eff 90 days after filing with the Secretary of State)*

675 IAC 14-4.2-182.1 Section E3302.2; penetrations of fire-resistance-rated assemblies (Repealed)

Sec. 182.1. *(Repealed by Fire Prevention and Building Safety Commission; filed Jun 13, 2005, 3:00 p.m.: 28 IR 3305, eff 90 days after filing with the Secretary of State)*

675 IAC 14-4.2-183 Section E3303.2; inspection required (Repealed)

Sec. 183. *(Repealed by Fire Prevention and Building Safety Commission; filed Jun 13, 2005, 3:00 p.m.: 28 IR 3305, eff 90 days after filing with the Secretary of State)*

675 IAC 14-4.2-184 Section E3304.2; interrupting rating (Repealed)

Sec. 184. *(Repealed by Fire Prevention and Building Safety Commission; filed Jun 13, 2005, 3:00 p.m.: 28 IR 3305, eff 90 days after filing with the Secretary of State)*

675 IAC 14-4.2-185 Section E3305.6; illumination (Repealed)

Sec. 185. *(Repealed by Fire Prevention and Building Safety Commission; filed Jun 13, 2005, 3:00 p.m.: 28 IR 3305, eff 90 days after filing with the Secretary of State)*

675 IAC 14-4.2-185.1 Section E3306.5; individual conductor insulation (Repealed)

Sec. 185.1. *(Repealed by Fire Prevention and Building Safety Commission; filed Jun 13, 2005, 3:00 p.m.: 28 IR 3305, eff 90 days after filing with the Secretary of State)*

675 IAC 14-4.2-186 Section E3306.6; conductors in parallel (Repealed)

Sec. 186. *(Repealed by Fire Prevention and Building Safety Commission; filed Jun 13, 2005, 3:00 p.m.: 28 IR 3305, eff 90 days after filing with the Secretary of State)*

675 IAC 14-4.2-187 Section E3401; general (Repealed)

Sec. 187. *(Repealed by Fire Prevention and Building Safety Commission; filed Jun 13, 2005, 3:00 p.m.: 28 IR 3305, eff 90 days after filing with the Secretary of State)*

675 IAC 14-4.2-187.1 Section E3501.6.2; service disconnect location (Repealed)

Sec. 187.1. *(Repealed by Fire Prevention and Building Safety Commission; filed Jun 13, 2005, 3:00 p.m.: 28 IR 3305, eff 90 days after filing with the Secretary of State)*

675 IAC 14-4.2-187.2 Table E3503.1; service conductor and grounding electrode conductor sizing (Repealed)

Sec. 187.2. *(Repealed by Fire Prevention and Building Safety Commission; filed Jun 13, 2005, 3:00 p.m.: 28 IR 3305, eff 90 days after filing with the Secretary of State)*

675 IAC 14-4.2-187.3 Section E3504.2.1; above roofs (Repealed)

Sec. 187.3. *(Repealed by Fire Prevention and Building Safety Commission; filed Jun 13, 2005, 3:00 p.m.: 28 IR 3305, eff 90 days after filing with the Secretary of State)*

675 IAC 14-4.2-187.4 Section E3505.5; protection of service cables against damage (Repealed)

Sec. 187.4. *(Repealed by Fire Prevention and Building Safety Commission; filed Jun 13, 2005, 3:00 p.m.: 28 IR 3305, eff 90 days after filing with the Secretary of State)*

675 IAC 14-4.2-188 Section E3506.3; available short-circuit current (Repealed)

Sec. 188. *(Repealed by Fire Prevention and Building Safety Commission; filed Jun 13, 2005, 3:00 p.m.: 28 IR 3305, eff 90 days after filing with the Secretary of State)*

675 IAC 14-4.2-189 Section E3509.7; metal gas piping bonding (Repealed)

Sec. 189. *(Repealed by Fire Prevention and Building Safety Commission; filed Jun 13, 2005, 3:00 p.m.: 28 IR 3305, eff 90 days after filing with the Secretary of State)*

675 IAC 14-4.2-189.2 Section E3509.8; bonding other metal piping (Repealed)

Sec. 189.2. *(Repealed by Fire Prevention and Building Safety Commission; filed Jun 13, 2005, 3:00 p.m.: 28 IR 3305, eff 90 days after filing with the Secretary of State)*

675 IAC 14-4.2-190 Section E3602.9.1; minimum branch circuit for ranges (Repealed)

Sec. 190. *(Repealed by Fire Prevention and Building Safety Commission; filed Jun 13, 2005, 3:00 p.m.: 28 IR 3305, eff 90 days after filing with the Secretary of State)*

675 IAC 14-4.2-190.1 Section E3602.10; branch circuits serving heating loads (Repealed)

Sec. 190.1. *(Repealed by Fire Prevention and Building Safety Commission; filed Jun 13, 2005, 3:00 p.m.: 28 IR 3305, eff 90 days after filing with the Secretary of State)*

675 IAC 14-4.2-190.2 Section E3602.12; branch circuits serving room air conditioners (Repealed)

Sec. 190.2. *(Repealed by Fire Prevention and Building Safety Commission; filed Jun 13, 2005, 3:00 p.m.: 28 IR 3305, eff 90 days after filing with the Secretary of State)*

675 IAC 14-4.2-190.3 Section E3602.12.1; where no other loads are supplied (Repealed)

Sec. 190.3. *(Repealed by Fire Prevention and Building Safety Commission; filed Jun 13, 2005, 3:00 p.m.: 28 IR 3305, eff 90 days after filing with the Secretary of State)*

675 IAC 14-4.2-190.4 Section E3602.12.2; where lighting units or other appliances are also supplied (Repealed)

Sec. 190.4. *(Repealed by Fire Prevention and Building Safety Commission; filed Jun 13, 2005, 3:00 p.m.: 28 IR 3305, eff 90 days after filing with the Secretary of State)*

675 IAC 14-4.2-190.5 Section E3703.3; protection from damage (Repealed)

Sec. 190.5. *(Repealed by Fire Prevention and Building Safety Commission; filed Jun 13, 2005, 3:00 p.m.: 28 IR 3305, eff 90 days after filing with the Secretary of State)*

675 IAC 14-4.2-191 Figure E3801.4; countertop receptacles (Repealed)

Sec. 191. *(Repealed by Fire Prevention and Building Safety Commission; filed Jun 13, 2005, 3:00 p.m.: 28 IR 3305, eff 90 days after filing with the Secretary of State)*

675 IAC 14-4.2-191.1 Section E3801.4.5; receptacle outlet location (Repealed)

Sec. 191.1. *(Repealed by Fire Prevention and Building Safety Commission; filed Jun 13, 2005, 3:00 p.m.: 28 IR 3305, eff 90 days after filing with the Secretary of State)*

675 IAC 14-4.2-191.2 Section E3801.6; bathroom (Repealed)

Sec. 191.2. *(Repealed by Fire Prevention and Building Safety Commission; filed Jun 13, 2005, 3:00 p.m.: 28 IR 3305, eff 90 days after filing with the Secretary of State)*

675 IAC 14-4.2-191.3 Section E3801.9; basements and garages (Repealed)

Sec. 191.3. *(Repealed by Fire Prevention and Building Safety Commission; filed Jun 13, 2005, 3:00 p.m.: 28 IR 3305, eff 90 days after filing with the Secretary of State)*

675 IAC 14-4.2-191.4 Section E3801.11; HVAC outlet; Section E3802; ground-fault and arc-fault circuit-interrupter protection (Repealed)

Sec. 191.4. *(Repealed by Fire Prevention and Building Safety Commission; filed Jun 13, 2005, 3:00 p.m.: 28 IR 3305, eff 90 days after filing with the Secretary of State)*

675 IAC 14-4.2-191.5 Section E3802.8; exempt receptacles (Repealed)

Sec. 191.5. *(Repealed by Fire Prevention and Building Safety Commission; filed Jun 13, 2005, 3:00 p.m.: 28 IR 3305, eff 90 days after filing with the Secretary of State)*

675 IAC 14-4.2-192 Section E3802; ground-fault and arc-fault circuit-interrupter protection (Repealed)

Sec. 192. *(Repealed by Fire Prevention and Building Safety Commission; filed Jun 13, 2005, 3:00 p.m.: 28 IR 3305, eff 90 days after filing with the Secretary of State)*

675 IAC 14-4.2-192.1 Section E3803.3; additional locations (Repealed)

Sec. 192.1. *(Repealed by Fire Prevention and Building Safety Commission; filed Jun 13, 2005, 3:00 p.m.: 28 IR 3305, eff 90 days after filing with the Secretary of State)*

675 IAC 14-4.2-192.2 Section E3805.1; box, conduit body, or fitting; where required (Repealed)

Sec. 192.2. *(Repealed by Fire Prevention and Building Safety Commission; filed Jun 13, 2005, 3:00 p.m.: 28 IR 3305, eff 90 days after filing with the Secretary of State)*

675 IAC 14-4.2-192.3 Section E3805.3.1; nonmetallic-sheathed cable and nonmetallic boxes (Repealed)

Sec. 192.3. *(Repealed by Fire Prevention and Building Safety Commission; filed Jun 13, 2005, 3:00 p.m.: 28 IR 3305, eff 90 days after filing with the Secretary of State)*

675 IAC 14-4.2-192.4 Section E3805.3.2; securing to box (Repealed)

Sec. 192.4. *(Repealed by Fire Prevention and Building Safety Commission; filed Jun 13, 2005, 3:00 p.m.: 28 IR 3305, eff 90 days after filing with the Secretary of State)*

675 IAC 14-4.2-192.5 Section E3806.5; in wall or ceiling (Repealed)

Sec. 192.5. *(Repealed by Fire Prevention and Building Safety Commission; filed Jun 13, 2005, 3:00 p.m.: 28 IR 3305, eff 90 days after filing with the Secretary of State)*

675 IAC 14-4.2-192.6 Section E3806.8.2.1; nails (Repealed)

Sec. 192.6. *(Repealed by Fire Prevention and Building Safety Commission; filed Jun 13, 2005, 3:00 p.m.: 28 IR 3305, eff 90 days after filing with the Secretary of State)*

675 IAC 14-4.2-193 Section E3808.7; load-side equipment (Repealed)

Sec. 193. *(Repealed by Fire Prevention and Building Safety Commission; filed Jun 13, 2005, 3:00 p.m.: 28 IR 3305, eff 90 days after filing with the Secretary of State)*

675 IAC 14-4.2-193.1 Section E3808.8; types of equipment grounding conductors (Repealed)

Sec. 193.1. *(Repealed by Fire Prevention and Building Safety Commission; filed Jun 13, 2005, 3:00 p.m.: 28 IR 3305, eff 90 days after filing with the Secretary of State)*

675 IAC 14-4.2-193.2 Section E3901.3; indicating (Repealed)

Sec. 193.2. *(Repealed by Fire Prevention and Building Safety Commission; filed Jun 13, 2005, 3:00 p.m.: 28 IR 3305, eff 90 days after filing with the Secretary of State)*

675 IAC 14-4.2-193.3 Section E3902.12; outdoor installation (Repealed)

Sec. 193.3. *(Repealed by Fire Prevention and Building Safety Commission; filed Jun 13, 2005, 3:00 p.m.: 28 IR 3305, eff 90 days after filing with the Secretary of State)*

675 IAC 14-4.2-193.4 Section E3903.11; fixtures in clothes closets (Repealed)

Sec. 193.4. *(Repealed by Fire Prevention and Building Safety Commission; filed Jun 13, 2005, 3:00 p.m.: 28 IR 3305, eff 90 days after filing with the Secretary of State)*

675 IAC 14-4.2-193.5 Table E4103.5; overhead conductor clearances (Repealed)

Sec. 193.5. *(Repealed by Fire Prevention and Building Safety Commission; filed Jun 13, 2005, 3:00 p.m.: 28 IR 3305, eff 90 days after filing with the Secretary of State)*

675 IAC 14-4.2-194 Section E4103.6; underground wiring (Repealed)

Sec. 194. *(Repealed by Fire Prevention and Building Safety Commission; filed Jun 13, 2005, 3:00 p.m.: 28 IR 3305, eff 90 days after filing with the Secretary of State)*

675 IAC 14-4.2-194.1 Section E4104.1; bonded parts (Repealed)

Sec. 194.1. *(Repealed by Fire Prevention and Building Safety Commission; filed Jun 13, 2005, 3:00 p.m.: 28 IR 3305, eff 90 days after filing with the Secretary of State)*

675 IAC 14-4.2-194.2 Section E4106.8.2; other enclosures (Repealed)

Sec. 194.2. *(Repealed by Fire Prevention and Building Safety Commission; filed Jun 13, 2005, 3:00 p.m.: 28 IR 3305, eff 90 days after filing with the Secretary of State)*

675 IAC 14-4.2-194.3 Section E4106.9.2; wiring methods (Repealed)

Sec. 194.3. *(Repealed by Fire Prevention and Building Safety Commission; filed Jun 13, 2005, 3:00 p.m.: 28 IR 3305, eff 90 days after filing with the Secretary of State)*

675 IAC 14-4.2-194.4 Section E4106.10; electrically operated pool covers (Repealed)

Sec. 194.4. *(Repealed by Fire Prevention and Building Safety Commission; filed Jun 13, 2005, 3:00 p.m.: 28 IR 3305, eff 90 days after filing with the Secretary of State)*

675 IAC 14-4.2-194.5 Section E4106.12.2; permanently wired radiant heaters (Repealed)

Sec. 194.5. *(Repealed by Fire Prevention and Building Safety Commission; filed Jun 13, 2005, 3:00 p.m.: 28 IR 3305, eff 90 days after filing with the Secretary of State)*

675 IAC 14-4.2-194.6 Section E4201.2; definitions (Repealed)

Sec. 194.6. *(Repealed by Fire Prevention and Building Safety Commission; filed Jun 13, 2005, 3:00 p.m.: 28 IR 3305, eff 90 days after filing with the Secretary of State)*

675 IAC 14-4.2-194.7 Section E4201.3; spread of fire or products of combustion (Repealed)

Sec. 194.7. *(Repealed by Fire Prevention and Building Safety Commission; filed Jun 13, 2005, 3:00 p.m.: 28 IR 3305, eff 90 days after filing with the Secretary of State)*

675 IAC 14-4.2-195 Chapter 43; referenced standards (Repealed)

Sec. 195. *(Repealed by Fire Prevention and Building Safety Commission; filed Jun 13, 2005, 3:00 p.m.: 28 IR 3305, eff 90 days after filing with the Secretary of State)*

675 IAC 14-4.2-196 Appendix A; sizing and capacities of gas pipe (Repealed)

Sec. 196. *(Repealed by Fire Prevention and Building Safety Commission; filed Jun 13, 2005, 3:00 p.m.: 28 IR 3305, eff 90*

days after filing with the Secretary of State)

675 IAC 14-4.2-197 Appendix B; sizing of venting systems serving appliances equipped with draft hoods, Category 1 appliances, and appliances listed for use and Type B vents (Repealed)

Sec. 197. *(Repealed by Fire Prevention and Building Safety Commission; filed Jun 13, 2005, 3:00 p.m.: 28 IR 3305, eff 90 days after filing with the Secretary of State)*

675 IAC 14-4.2-198 Appendix C; exit terminals of mechanical draft and direct-vent systems (Repealed)

Sec. 198. *(Repealed by Fire Prevention and Building Safety Commission; filed Jun 13, 2005, 3:00 p.m.: 28 IR 3305, eff 90 days after filing with the Secretary of State)*

675 IAC 14-4.2-199 Appendix D; recommend procedure for safety inspection of an existing appliance installation (Repealed)

Sec. 199. *(Repealed by Fire Prevention and Building Safety Commission; filed Jun 13, 2005, 3:00 p.m.: 28 IR 3305, eff 90 days after filing with the Secretary of State)*

675 IAC 14-4.2-200 Appendix E; manufactured housing used as dwellings (Repealed)

Sec. 200. *(Repealed by Fire Prevention and Building Safety Commission; filed Jun 13, 2005, 3:00 p.m.: 28 IR 3305, eff 90 days after filing with the Secretary of State)*

675 IAC 14-4.2-201 Appendix F; radon control methods (Repealed)

Sec. 201. *(Repealed by Fire Prevention and Building Safety Commission; filed Jun 13, 2005, 3:00 p.m.: 28 IR 3305, eff 90 days after filing with the Secretary of State)*

675 IAC 14-4.2-202 Appendix G; swimming pools, spas, and hot tubs (Repealed)

Sec. 202. *(Repealed by Fire Prevention and Building Safety Commission; filed Jun 13, 2005, 3:00 p.m.: 28 IR 3305, eff 90 days after filing with the Secretary of State)*

675 IAC 14-4.2-203 Appendix H; patio covers (Repealed)

Sec. 203. *(Repealed by Fire Prevention and Building Safety Commission; filed Jun 13, 2005, 3:00 p.m.: 28 IR 3305, eff 90 days after filing with the Secretary of State)*

675 IAC 14-4.2-204 Appendix I; private sewage disposal (Repealed)

Sec. 204. *(Repealed by Fire Prevention and Building Safety Commission; filed Jun 13, 2005, 3:00 p.m.: 28 IR 3305, eff 90 days after filing with the Secretary of State)*

675 IAC 14-4.2-205 Appendix J; existing buildings and structures (Repealed)

Sec. 205. *(Repealed by Fire Prevention and Building Safety Commission; filed Jun 13, 2005, 3:00 p.m.: 28 IR 3305, eff 90 days after filing with the Secretary of State)*

675 IAC 14-4.2-206 Appendix K; sound transmission (Repealed)

Sec. 206. *(Repealed by Fire Prevention and Building Safety Commission; filed Jun 13, 2005, 3:00 p.m.: 28 IR 3305, eff 90 days after filing with the Secretary of State)*

Rule 4.3. 2005 Indiana Residential Code

675 IAC 14-4.3-1 Adoption by reference; title; purpose

Authority: IC 22-13-2-2; IC 22-13-2-13
Affected: IC 22-12; IC 22-13; IC 22-14; IC 22-15; IC 36-7

Sec. 1. (a) Those certain documents being titled the 2003 International Residential Code for One and Two Family Dwellings, fifth printing, and Chapter 43 of the 2006 International Residential Code for One and Two Family Dwellings, first printing, published by the International Code Council, 5203 Leesburg Pike, Suite 708, Falls Church, Virginia 22041-3401, are hereby adopted by reference as if fully set out in this rule save and except those revisions made in this rule.

(b) This rule shall be:

(1) known as the Indiana Residential Code, 2005 edition; and

(2) published, except incorporated documents, by the department of homeland security for general distribution and use under that title.

Wherever the term "this code" is used throughout this rule, it shall mean the Indiana Residential Code, 2005 edition.

(c) This rule is available for reference and review at the Department of Homeland Security, Indiana Government Center-South, 402 West Washington Street, Room W246, Indianapolis, Indiana 46204.

(d) The purpose of this code is to provide minimum requirements for safety and to safeguard property, public safety, and general welfare through affordability, by regulating and controlling the design, construction, installation, and quality of materials of residential structures as regulated by this code. *(Fire Prevention and Building Safety Commission; 675 IAC 14-4.3-1; filed Jun 13, 2005, 3:00 p.m.: 28 IR 3256, eff 90 days after filing with the Secretary of State; filed Mar 6, 2008, 11:13 a.m.: 20080402-IR-675070483FRA; readopted filed Aug 4, 2011, 8:35 a.m.: 20110831-IR-675110254RFA)*

675 IAC 14-4.3-2 Chapter 1; administration

Authority: IC 22-13-2-2; IC 22-13-2-13
Affected: IC 4-21.5; IC 4-22-7-7; IC 22-12-1-16; IC 22-12-1-17; IC 22-12-7; IC 22-13-2-7; IC 22-13-5; IC 22-14; IC 22-15; IC 25-4; IC 25-31; IC 36-7

Sec. 2. Delete Chapter 1 and substitute as follows: (a) SECTION R101 Application is added to read as follows: SECTION R101 APPLICATION

The provisions of this code apply to the construction, prefabrication, alteration, addition, and remodel of detached one or two family dwellings and one family townhouses not more than 3 stories in height and their accessory structures.

This code does not apply to manufactured homes as defined in SECTION R202, SECTION AE201, and IC 22-12-1-16 except as addressed in APPENDIX E.

This code does not apply to mobile structures as defined in IC 22-12-1-17.

Townhouses are classified as Class 1 structures and detached one and two family dwellings and their accessory structures are classified as Class 2 structures.

Provisions in the appendices are not enforceable unless specifically adopted.

The codes and standards referenced in this code shall be considered part of the requirements of this code to the prescribed extent of each such reference. Where differences occur between provisions of this code and referenced codes and standards, the provisions of this code shall apply.

EXCEPTION: Where the enforcement of a code provision would violate the listing of the equipment, appliance, manufacturer's instructions or certification of engineered products by a registered architect registered under IC 25-4 or a professional engineer registered under IC 25-31, the conditions of the listing, manufacturer's instructions, or professional certification by a registered architect or professional engineer shall apply.

(b) SECTION R102 is added to read as follows: SECTION R102 APPEALS AND INTERPRETATIONS

Appeals from orders issued by the Fire Prevention and Building Safety Commission, the state building commissioner, or the state fire marshal are governed by IC 4-21.5 and IC 22-12-7. Appeals from orders by a local unit of government are governed by IC 22-13-2-7 and local ordinance. Upon the written request of an interested person, the office of the state building commissioner may issue a written interpretation of a building law. The written interpretation as issued under IC 22-13-5 binds the interested person and the county or municipality with whom the interested person has the dispute until overruled under IC 4-21.5. A written interpretation of a building law binds all counties and municipalities if the office of the state building commissioner publishes the written interpretation of the building law in the Indiana Register under IC 4-22-7-7(b).

(c) SECTION R103 is added to read as follows: SECTION R103 PLANS

Plans shall be submitted for Class 1 structures as required by the General Administrative Rules (675 IAC 12-6) and for Class 2 structures as required by local ordinance.

(d) SECTION R104 is added to read as follows: SECTION R104 EXISTING CONSTRUCTION

For existing construction, see the General Administrative Rules (675 IAC 12-4) and local ordinance.

(e) SECTION R105 is added to read as follows: SECTION R105 ADDITIONS AND ALTERATIONS

Additions and alterations to any structure shall conform to that required for a new structure without requiring the existing structure to comply with all the requirements of this code. Additions or alterations shall not cause an existing structure to become unsafe.

(f) SECTION R106 is added to read as follows: SECTION R106 ALTERNATIVE MATERIALS, METHODS, AND EQUIPMENT

SECTION R106.1 ALTERNATE MATERIALS, METHODS, AND EQUIPMENT

The provisions of this code are not intended to limit the appropriate use of materials, appliances, equipment, or methods of design or construction not specifically prescribed by this code. The building official shall determine equivalence of the proposed alternate materials, appliances, equipment, or method of design or construction of that prescribed in this code in suitability, quality, strength, effectiveness, fire resistance, durability, dimensional stability, safety, and sanitation on the basis of evidence and/or tests as described in R106.2 and R106.3, as suitable to be approved. For Class 1 structures, alternate materials, methods, equipment, and design shall be as required by the General Administrative Rules (675 IAC 12-6-11). Compliance with specific provisions of the Indiana Building Code (675 IAC 13) or the Indiana Plumbing Code (675 IAC 16) in lieu of the requirements of this code shall be permitted as an alternate.

SECTION R106.2 EVIDENCE

The building official may require that evidence or proof be submitted to substantiate any claims that may be made regarding the proposed alternate.

SECTION R106.3 TESTS AND STANDARDS

The determination of equivalence shall be based on design or test methods or approved standards. In addition, the building official may accept as supporting data to assist in this determination duly authenticated reports from the Building Officials and Code Administrators International, Inc., Southern Building Code Congress International, Inc., International Conference of Building Officials, the International Code Council, Inc., or their successors, or acceptance documents from the U.S. Department of Housing and Urban Development, the certification of a registered architect registered under IC 25-4 or a professional engineer registered under IC 25-31, or the General Administrative Rules (675 IAC 12).

Whenever there is insufficient evidence of compliance with the provisions of this code, or evidence that a material or method does not conform to the requirements of this code, or in order to substantiate claims for alternative materials or methods, the building official shall have the authority to require tests as evidence of compliance to be made at no expense to the jurisdiction. Test methods shall be as specified in this code or by other recognized test standards. Tests shall be performed by an approved agency. Reports of such test shall be retained by the building official for a period required for retention of public records.

(g) SECTION R107 is added to read as follows: SECTION R107 WORKMANSHIP

General Workmanship. All construction methods shall be accepted practices to ensure livable and safe housing and shall demonstrate acceptable workmanship. *(Fire Prevention and Building Safety Commission; 675 IAC 14-4.3-2; filed Jun 13, 2005, 3:00 p.m.: 28 IR 3256, eff 90 days after filing with the Secretary of State; readopted filed Aug 4, 2011, 8:35 a.m.: 20110831-IR-675110254RFA)*

675 IAC 14-4.3-3 Section R202; definitions

Authority: IC 22-13-2-2; IC 22-13-2-13
Affected: IC 22-12; IC 22-13; IC 22-14; IC 22-15; IC 25-4; IC 25-31; IC 36-7

Sec. 3. Change Section R202, Definitions, as follows:

(1) Change the definition of ACCESSORY STRUCTURE to read as follows: In one and two family dwellings and for the purpose of APPENDIX E, structures not more than 3 stories high with separate means of egress, and the use of which is incidental to that of the main building and which is located on the same lot.

(2) Change the definition of ALTERATION by deleting "other than repair".

(3) Change APPROVED to read as follows: APPROVED means, as to materials, equipment, appliances, methods of design, and types of construction, acceptance by the building official by one (1) of the following methods:

(1) investigation or tests conducted by recognized authorities;
(2) investigation or tests conducted by technical or scientific organizations; or
(3) accepted principles.

The investigation, tests, or principles shall establish that the materials, equipment, appliances, methods of design, and types of construction are safe for their intended purpose.

(4) Change the definition of BUILDING, EXISTING to read as follows: BUILDING, EXISTING. Existing building is a building or structure erected prior to the adoption of this code.

(5) Change the definition of BUILDING OFFICIAL to read as follows: BUILDING OFFICIAL, as used in this code, shall be the local official or officials as designated in local ordinance, except it shall be the state building commissioner for Industrialized Building Systems under 675 IAC 15 and IC 22-15 and for plan review for townhouses under 675 IAC 12 and IC 22-15.

(6) Delete the definition of CONSTRUCTION DOCUMENTS and substitute to read as follows: CONSTRUCTION DOCUMENTS. For construction documents, see the General Administrative Rules (675 IAC 12) for Class 1 structures and local ordinance for Class 2 structures.

(7) Delete, from the definition of ESSENTIALLY NONTOXIC TRANSFER FLUIDS, "; and FDA-approved boiler water additions for steam boilers".

(8) Change the definition of EXISTING INSTALLATIONS to read as follows: Any system regulated by this code that was legally installed prior to the effective date of this code.

(9) Add a definition of FAMILY after the definition of FACTORY-BUILT CHIMNEY to read as follows: FAMILY means an individual or 2 or more persons related by blood or marriage and/or a group of not more than 10 persons (excluding servants) who need not be related by blood or marriage living together in a dwelling unit.

(10) Change the definition of FIREBLOCKING to read as follows: Building materials, or materials labeled for use as fireblocking, installed to resist the free passage of flame to other areas of the building through concealed spaces.

(11) Add, in the definition of FOAM PLASTIC INSULATION, "of" between "consisting" and "open".

(12) Add a definition of FOUNDATION WALL after FOAM PLASTIC INSULATION to read as follows: FOUNDATION WALL means the supporting element(s) that extend from the top of the footing to the bottom of the sill plate.

(13) Delete, in the definition of HEATING DEGREE DAY (HDD), "acceptable to the code" and substitute "approved by the building".

(14) Add the following definitions after INSULATING SHEATHING:

INTERNATIONAL BUILDING CODE means the Indiana Building Code (675 IAC 13).
ICC ELECTRICAL CODE means the Indiana Electrical Code (675 IAC 17).
INTERNATIONAL FIRE CODE means the Indiana Fire Code (675 IAC 22).
INTERNATIONAL FUEL GAS CODE means the Indiana Fuel Gas Code (675 IAC 25).
INTERNATIONAL MECHANICAL CODE means the Indiana Mechanical Code (675 IAC 18).
INTERNATIONAL PLUMBING CODE means the Indiana Plumbing Code (675 IAC 16).

(15) Delete the definition of LABELED and substitute to read as follows: LABELED. Equipment or materials to which has been attached a label, symbol, or other identifying mark of an organization engaged in product evaluation that maintains periodic inspection or production of labeled equipment or materials and by whose labeling the manufacturer indicates

compliance with appropriate standards or performance in a specified manner.

(16) Delete the definition of LISTED AND LISTING and substitute to read as follows: LISTED AND LISTING. Equipment or materials included in a list published by an organization engaged in product evaluation that maintains periodic inspection of production of listed equipment or materials and whose listing states either that the equipment or material meets appropriate standards or has been tested and found suitable for use in a specified manner.

(17) Add a definition of MONO-PITCH TRUSS after MODIFIED BITUMEN ROOF COVERING to read as follows: MONO-PITCH TRUSS means a truss with a top chord having a single uninterrupted slope of more than 1.5/12.

(18) Add a definition of NATIONAL ELECTRICAL CODE after MULTIPLE STATION SMOKE ALARM to read as follows: NATIONAL ELECTRICAL CODE means the Indiana Electrical Code (675 IAC 17).

(19) Add a definition of NFPA 70 after NATURAL DRAFT SYSTEM to read as follows: NFPA 70 means the Indiana Electrical Code (675 IAC 17).

(20) Delete the definition of PERMIT.

(21) Delete, in the definition of PLUMBING, ", repairs, maintenance".

(22) Delete, in the definition of PLUMBING APPURTENANCE, ", maintenance, servicing, economy".

(23) Delete the definition of POTABLE WATER and substitute to read as follows: POTABLE WATER. Water that at the point of use is acceptable for human consumption under drinking water standards adopted by the Water Pollution Control Board at 327 IAC 8.

(24) Change the definition of RECESSED LIGHT after RECEPTOR to read as follows: RECESSED LUMINAIRE. For purposes of Chapter 11, RECESSED LUMINAIRE means a luminaire that by design penetrates the thermal boundary of the building.

(25) Add a definition for REGISTERED DESIGN PROFESSIONAL to read as follows: REGISTERED DESIGN PROFESSIONAL means an architect who is registered under IC 25-4 or a professional engineer who is registered under IC 25-31.

(26) Delete the definition of ROOF REPAIR.

(27) Add a definition of SILL PLATE after the definition of SIDE VENT to read as follows: SILL PLATE means in frame construction the bottom rough structural member that rests on the foundation.

(28) Add a definition of SLAB-ON-GRADE FLOOR INSULATION after SKYLIGHT AND SLOPED GLAZING to read as follows: SLAB-ON-GRADE FLOOR INSULATION means insulation around the perimeter of the floor slab or its supporting foundation.

(29) Add a definition of SOLE PLATE after the definition of SOLAR HEAT GAIN COEFFICIENT (SHGC) to read as follows: SOLE PLATE means in frame construction the horizontal member of a frame wall or partition that rests on any type floor.

(30) Add a definition of SMOKE ALARM after SLOPE to read as follows: SMOKE ALARM an alarm device that is responsive to smoke.

(31) Add a definition of TACTILE NOTIFICATION APPLIANCE after SWEEP to read as follows: TACTILE NOTIFICATION APPLIANCE a notification appliance that alerts by sense of touch or vibration.

(32) Amend the definition of TOWNHOUSE to delete the text and insert to read as follows: TOWNHOUSE has the meaning ascribed thereto in IC 22-12-1-5(c).

(33) Change, in the definition for UNUSUALLY TIGHT CONSTRUCTION, 3, to read as follows: 3. Caulking or sealants are applied to joints and openings in the thermal envelope of the building such as: joints around window and door frames; between supporting structure and sill and sole plates; wall-ceiling joints; and at penetrations for plumbing, electrical and gas lines.

(34) Add a definition of WORKMANSHIP after the definition of WOOD STRUCTURAL PANEL to read as follows: WORKMANSHIP means the installation, application, or construction of materials, equipment, or fixtures as they are intended to be incorporated into a one-or-two-family dwelling as mandated by this code, the manufacturer, or industry standards. Items that are aesthetic in nature and that do not affect the livability, intended use, or the safety of a structure are excluded.

(Fire Prevention and Building Safety Commission; 675 IAC 14-4.3-3; filed Jun 13, 2005, 3:00 p.m.: 28 IR 3257, eff 90 days after filing with the Secretary of State; filed Mar 6, 2008, 11:13 a.m.: 20080402-IR-675070483FRA; readopted filed Aug 4, 2011, 8:35

a.m.: 20110831-IR-675110254RFA; filed Aug 1, 2014, 11:12 a.m.: 20140827-IR-675130339FRA, eff Dec 1, 2014)

675 IAC 14-4.3-4 Section R301.2; climatic and geographic design criteria

Authority: IC 22-13-2-2; IC 22-13-2-13
Affected: IC 22-12; IC 22-13; IC 22-14; IC 22-15; IC 36-7

Sec. 4. Delete the last sentence of SECTION R301.2. *(Fire Prevention and Building Safety Commission; 675 IAC 14-4.3-4; filed Jun 13, 2005, 3:00 p.m.: 28 IR 3259, eff 90 days after filing with the Secretary of State; readopted filed Aug 4, 2011, 8:35 a.m.: 20110831-IR-675110254RFA)*

675 IAC 14-4.3-5 Sections R301.2.1.1 and R301.2.1.2; design criteria, internal pressure

Authority: IC 22-13-2-2; IC 22-13-2-13
Affected: IC 22-12; IC 22-13; IC 22-14; IC 22-15; IC 36-7

Sec. 5. Delete SECTIONS R301.2.1.1 and R301.2.1.2. *(Fire Prevention and Building Safety Commission; 675 IAC 14-4.3-5; filed Jun 13, 2005, 3:00 p.m.: 28 IR 3259, eff 90 days after filing with the Secretary of State; readopted filed Aug 4, 2011, 8:35 a.m.: 20110831-IR-675110254RFA)*

675 IAC 14-4.3-6 Table R301.2(1); climatic and geographical design criteria

Authority: IC 22-13-2-2; IC 22-13-2-13
Affected: IC 22-12; IC 22-13; IC 22-14; IC 22-15; IC 36-7

Sec. 6. Delete TABLE R301.2(1) and the corresponding footnotes and substitute to read as follows:

TABLE R301.2(1)

No.	County	Wind Speed[1] (MPH)	Seismic Zone[2]	Ground Snow (PSF)	Found-ation[3]	Winter Design Temp	Decay	Termite	Weathering[4]	Ice Shield Under-layment Required	Air Freezing Index	Mean Annual Temp
01	Adams	90	B	20	36	1°	Slight to Moderate	Moderate to Heavy	Severe	Yes	1303	50.9
02	Allen	90	B	20	36	1°	Slight to Moderate	Moderate to Heavy	Severe	Yes	1490	49.9
03	Bartholomew	90	B	20	24	9°	Slight to Moderate	Moderate to Heavy	Severe	No	1083	53.1
04	Benton	90	B	20	36	1°	Slight to Moderate	Moderate to Heavy	Severe	Yes	1350	49.1
05	Blackford	90	B	20	30	2°	Slight to Moderate	Moderate to Heavy	Severe	No	1425	51.4
06	Boone	90	B	20	30	2°	Slight to Moderate	Moderate to Heavy	Severe	No	1401	52.3
07	Brown	90	B	20	24	9°	Slight to Moderate	Moderate to Heavy	Severe	No	1080	53.1
08	Carroll	90	B	20	36	1°	Slight to Moderate	Moderate to Heavy	Severe	Yes	1321	51.7
09	Cass	90	A	20	36	1°	Slight to Moderate	Moderate to Heavy	Severe	Yes	1450	50.3
10	Clark	90	B	20	24	9°	Slight to Moderate	Moderate to Heavy	Severe	No	825	54.7

11	Clay	90	C	20	24	9°	Slight to Moderate	Moderate to Heavy	Severe	No	1175	52.1
12	Clinton	90	B	20	30	2°	Slight to Moderate	Moderate to Heavy	Severe	No	1405	50.7
13	Crawford	90	C	20	24	9°	Slight to Moderate	Moderate to Heavy	Severe	No	750	54.7
14	Daviess	90	C_1	20	24	9°	Slight to Moderate	Moderate to Heavy	Severe	No	743	56.1
15	Dearborn	90	B	20	24	9°	Slight to Moderate	Moderate to Heavy	Severe	No	900	50.5
16	Decatur	90	B	20	24	9°	Slight to Moderate	Moderate to Heavy	Severe	No	1115	52.4
17	Dekalb	90	B	30	36	1°	Slight to Moderate	Moderate to Heavy	Severe	Yes	1389	50.0
18	Delaware	90	B	20	30	2°	Slight to Moderate	Moderate to Heavy	Severe	No	1400	50.8
19	Dubois	90	C	20	24	9°	Slight to Moderate	Moderate to Heavy	Severe	No	770	53.9
20	Elkhart	90	A	30	36	1°	Slight to Moderate	Moderate to Heavy	Severe	Yes	1358	50.5
21	Fayette	90	B	20	30	2°	Slight to Moderate	Moderate to Heavy	Severe	No	1369	51.5
22	Floyd	90	B	20	24	9°	Slight to Moderate	Moderate to Heavy	Severe	No	770	54.7
23	Fountain	90	B	20	30	2°	Slight to Moderate	Moderate to Heavy	Severe	No	1525	51.2
24	Franklin	90	B	20	24	9°	Slight to Moderate	Moderate to Heavy	Severe	No	1174	51.8
25	Fulton	90	A	30	36	1°	Slight to Moderate	Moderate to Heavy	Severe	Yes	1553	49.3
26	Gibson	90	C_1	20	24	9°	Slight to Moderate	Moderate to Heavy	Severe	No	893	55.2
27	Grant	90	B	20	30	2°	Slight to Moderate	Moderate to Heavy	Severe	No	1430	50.3
28	Greene	90	C	20	24	9°	Slight to Moderate	Moderate to Heavy	Severe	No	990	52.9
29	Hamilton	90	B	20	30	2°	Slight to Moderate	Moderate to Heavy	Severe	No	1400	51.5
30	Hancock	90	B	20	30	2°	Slight to Moderate	Moderate to Heavy	Severe	No	1356	51.6
31	Harrison	90	B	20	24	9°	Slight to Moderate	Moderate to Heavy	Severe	No	740	54.7
32	Hendricks	90	B	20	30	2°	Slight to Moderate	Moderate to Heavy	Severe	No	1175	52.3
33	Henry	90	B	20	30	2°	Slight to Moderate	Moderate to Heavy	Severe	No	1432	49.9

34	Howard	90	A	20	30	2°	Slight to Moderate	Moderate to Heavy	Severe	No	1523	49.6
35	Huntington	90	B	20	36	1°	Slight to Moderate	Moderate to Heavy	Severe	Yes	1270	50.4
36	Jackson	90	B	20	24	9°	Slight to Moderate	Moderate to Heavy	Severe	No	1048	52.5
37	Jasper	90	B	30	36	1°	Slight to Moderate	Moderate to Heavy	Severe	Yes	1647	49.6
38	Jay	90	B	20	30	2°	Slight to Moderate	Moderate to Heavy	Severe	No	1400	49.7
39	Jefferson	90	B	20	24	9°	Slight to Moderate	Moderate to Heavy	Severe	No	870	54.7
40	Jennings	90	B	20	24	9°	Slight to Moderate	Moderate to Heavy	Severe	No	789	54.3
41	Johnson	90	B	20	30	2°	Slight to Moderate	Moderate to Heavy	Severe	No	1390	52.0
42	Knox	90	C_1	20	24	9°	Slight to Moderate	Moderate to Heavy	Severe	No	1029	53.4
43	Kosciusko	90	A	30	36	1°	Slight to Moderate	Moderate to Heavy	Severe	Yes	1450	49.0
44	LaGrange	90	A	30	36	1°	Slight to Moderate	Moderate to Heavy	Severe	Yes	1360	47.9
45	Lake	90	B	30	36	1°	Slight to Moderate	Moderate to Heavy	Severe	Yes	1300	49.0
46	LaPorte	90	A	30	36	1°	Slight to Moderate	Moderate to Heavy	Severe	Yes	1395	49.7
47	Lawrence	90	C	20	24	9°	Slight to Moderate	Moderate to Heavy	Severe	No	1115	52.6
48	Madison	90	B	20	30	2°	Slight to Moderate	Moderate to Heavy	Severe	No	1420	50.8
49	Marion	90	B	20	30	2°	Slight to Moderate	Moderate to Heavy	Severe	No	1215	51.8
50	Marshall	90	A	30	36	1°	Slight to Moderate	Moderate to Heavy	Severe	Yes	1424	50.0
51	Martin	90	C	20	24	9°	Slight to Moderate	Moderate to Heavy	Severe	No	849	54.2
52	Miami	90	A	20	36	1°	Slight to Moderate	Moderate to Heavy	Severe	Yes	1425	49.4
53	Monroe	90	C	20	24	9°	Slight to Moderate	Moderate to Heavy	Severe	No	1075	53.1
54	Montgomery	90	B	20	30	2°	Slight to Moderate	Moderate to Heavy	Severe	No	1435	50.1
55	Morgan	90	B	20	30	2°	Slight to Moderate	Moderate to Heavy	Severe	No	1200	51.5
56	Newton	90	B	30	36	1°	Slight to Moderate	Moderate to Heavy	Severe	Yes	1399	50.2

57	Noble	90	A	30	36	1°	Slight to Moderate	Moderate to Heavy	Severe	Yes	1375	49.0
58	Ohio	90	B	20	24	9°	Slight to Moderate	Moderate to Heavy	Severe	No	800	53.0
59	Orange	90	C	20	24	9°	Slight to Moderate	Moderate to Heavy	Severe	No	988	53.0
60	Owen	90	C	20	24	9°	Slight to Moderate	Moderate to Heavy	Severe	No	1224	50.1
61	Parke	90	B	20	30	2°	Slight to Moderate	Moderate to Heavy	Severe	No	1109	53.9
62	Perry	90	C	20	24	9°	Slight to Moderate	Moderate to Heavy	Severe	No	731	55.8
63	Pike	90	C_1	20	24	9°	Slight to Moderate	Moderate to Heavy	Severe	No	810	54.8
64	Porter	90	B	30	36	1°	Slight to Moderate	Moderate to Heavy	Severe	Yes	1396	49.6
65	Posey	90	C_1	20	24	9°	Slight to Moderate	Moderate to Heavy	Severe	No	867	55.4
66	Pulaski	90	A	30	36	1°	Slight to Moderate	Moderate to Heavy	Severe	Yes	1480	49.7
67	Putnam	90	B	20	30	2°	Slight to Moderate	Moderate to Heavy	Severe	No	1121	52.6
68	Randolph	90	B	20	30	2°	Slight to Moderate	Moderate to Heavy	Severe	No	1398	49.9
69	Ripley	90	B	20	24	9°	Slight to Moderate	Moderate to Heavy	Severe	No	820	54.5
70	Rush	90	B	20	30	2°	Slight to Moderate	Moderate to Heavy	Severe	No	1369	51.2
71	St. Joseph	90	A	30	36	1°	Slight to Moderate	Moderate to Heavy	Severe	Yes	1379	49.1
72	Scott	90	B	20	24	9°	Slight to Moderate	Moderate to Heavy	Severe	No	941	53.9
73	Shelby	90	B	20	30	2°	Slight to Moderate	Moderate to Heavy	Severe	No	1393	52.6
74	Spencer	90	C_1	20	24	9°	Slight to Moderate	Moderate to Heavy	Severe	No	710	56.2
75	Starke	90	A	30	36	1°	Slight to Moderate	Moderate to Heavy	Severe	Yes	1425	49.7
76	Steuben	90	A	30	36	1°	Slight to Moderate	Moderate to Heavy	Severe	Yes	1370	47.3
77	Sullivan	90	C_1	20	24	9°	Slight to Moderate	Moderate to Heavy	Severe	No	1090	52.7
78	Switzerland	90	B	20	24	9°	Slight to Moderate	Moderate to Heavy	Severe	No	727	55.7
79	Tippecanoe	90	B	20	30	2°	Slight to Moderate	Moderate to Heavy	Severe	No	1557	50.9

80	Tipton	90	B	20	30	2°	Slight to Moderate	Moderate to Heavy	Severe	No	1420	49.2
81	Union	90	B	20	30	2°	Slight to Moderate	Moderate to Heavy	Severe	No	1350	51.5
82	Vanderburgh	90	C_1	20	24	9°	Slight to Moderate	Moderate to Heavy	Severe	No	581	57.0
83	Vermillion	90	B	20	30	2°	Slight to Moderate	Moderate to Heavy	Severe	No	1100	50.8
84	Vigo	90	C	20	24	9°	Slight to Moderate	Moderate to Heavy	Severe	No	1198	53.1
85	Wabash	90	A	20	36	1°	Slight to Moderate	Moderate to Heavy	Severe	Yes	1536	49.0
86	Warren	90	B	20	30	2°	Slight to Moderate	Moderate to Heavy	Severe	No	1400	51.0
87	Warrick	90	C_1	20	24	9°	Slight to Moderate	Moderate to Heavy	Severe	No	690	56.2
88	Washington	90	B	20	24	9°	Slight to Moderate	Moderate to Heavy	Severe	No	950	54.5
89	Wayne	90	B	20	30	2°	Slight to Moderate	Moderate to Heavy	Severe	No	1383	49.9
90	Wells	90	B	20	36	1°	Slight to Moderate	Moderate to Heavy	Severe	Yes	1295	49.9
91	White	90	B	20	36	1°	Slight to Moderate	Moderate to Heavy	Severe	Yes	1410	50.3
92	Whitley	90	A	20	36	1°	Slight to Moderate	Moderate to Heavy	Severe	Yes	1493	48.8

[1]Wind exposure category shall be determined on a site-specific basis in accordance with SECTION R301.2.1.4.

[2]See SECTION R301.2.2.

[3]Foundation is minimum foundation depth to bottom of footing from the top of the finished grade above the footing in inches.

[4]The grade of masonry units shall be determined from ASTM C34, C55, C62, C73, C90, C129, C216, or C652.

(Fire Prevention and Building Safety Commission; 675 IAC 14-4.3-6; filed Jun 13, 2005, 3:00 p.m.: 28 IR 3259, eff 90 days after filing with the Secretary of State; readopted filed Aug 4, 2011, 8:35 a.m.: 20110831-IR-675110254RFA)

675 IAC 14-4.3-7 Figures R301.2(1), R301.2(2), R301.2(3), R301.2(4), R301.2(5), R301.2(6), R301.2(7), and R301.2(8)

Authority: IC 22-13-2-2; IC 22-13-2-13
Affected: IC 22-12; IC 22-13; IC 22-14; IC 22-15; IC 36-7

Sec. 7. Delete Figures R301.2(1), R301.2(2), R301.2(3), R301.2(4), R301.2(5), R301.2(6), R301.2(7), and R301.2(8). *(Fire Prevention and Building Safety Commission; 675 IAC 14-4.3-7; filed Jun 13, 2005, 3:00 p.m.: 28 IR 3262, eff 90 days after filing with the Secretary of State; readopted filed Aug 4, 2011, 8:35 a.m.: 20110831-IR-675110254RFA)*

675 IAC 14-4.3-8 Table R301.2.1.2

Authority: IC 22-13-2-2; IC 22-13-2-13
Affected: IC 22-12; IC 22-13; IC 22-14; IC 22-15; IC 36-7

Sec. 8. Delete Table R301.2.1.2 and the corresponding footnotes. *(Fire Prevention and Building Safety Commission; 675 IAC 14-4.3-8; filed Jun 13, 2005, 3:00 p.m.: 28 IR 3262, eff 90 days after filing with the Secretary of State; readopted filed Aug*

4, 2011, 8:35 a.m.: 20110831-IR-675110254RFA)

675 IAC 14-4.3-9 Section R301.2.2; seismic provisions

Authority: IC 22-13-2-2; IC 22-13-2-13
Affected: IC 22-12; IC 22-13; IC 22-14; IC 22-15; IC 36-7

Sec. 9. Change SECTION R301.2.2 to read as follows: The seismic provisions of this code shall apply to buildings constructed in Seismic Design Categories C and C_1 as determined in accordance with this section.

EXCEPTIONS: 1. Detached one and two family dwellings located in Seismic Design Category C are exempt from the seismic requirements of this code.

2. Detached one and two family dwellings located in Seismic Design Category C_1 shall comply with the following sections: R301.2.2.1.1, R301.2.2.3, R403.1.3, R403.1.4, R404.1.1, R404.1.2, R404.1.5, R606.10, R607.1.2, R611, R703.7, R1003.3, R1003.4, M2005.5, and FIGURE R606.10(2).

(Fire Prevention and Building Safety Commission; 675 IAC 14-4.3-9; filed Jun 13, 2005, 3:00 p.m.: 28 IR 3263, eff 90 days after filing with the Secretary of State; readopted filed Aug 4, 2011, 8:35 a.m.: 20110831-IR-675110254RFA)

675 IAC 14-4.3-10 Section R301.2.2.1; determination of seismic design category

Authority: IC 22-13-2-2; IC 22-13-2-13
Affected: IC 22-12; IC 22-13; IC 22-14; IC 22-15; IC 36-7

Sec. 10. Delete SECTION R301.2.2.1. *(Fire Prevention and Building Safety Commission; 675 IAC 14-4.3-10; filed Jun 13, 2005, 3:00 p.m.: 28 IR 3263, eff 90 days after filing with the Secretary of State; readopted filed Aug 4, 2011, 8:35 a.m.: 20110831-IR-675110254RFA)*

675 IAC 14-4.3-11 Section R301.2.2.1.1; alternate determination of seismic design category

Authority: IC 22-13-2-2; IC 22-13-2-13
Affected: IC 22-12; IC 22-13; IC 22-14; IC 22-15; IC 36-7

Sec. 11. Change SECTION R301.2.2.1.1 as follows: (a) Change the first sentence to read as follows: The Seismic Design Categories and corresponding Short Period Design Spectral Response Accelerations, S_{DS}, are based on soil Site Class D, as defined in the Indiana Building Code, 675 IAC 13.

(b) Change the second sentence to read as follows: If soil conditions are other than Site Class D, the Short Period Design Spectral Response Acceleration, S_{DS}, for a site can be determined according to the Indiana Building Code, 675 IAC 13.

(c) Change the third sentence to read as follows: The value of S_{DS} determined according to the Indiana Building Code, 675 IAC 13, is permitted to be used to set the Seismic Design Category according to TABLE R301.2.2.1.1, and to interpolate between values in TABLES R602.10.3 and R603.7 and other seismic design requirements of this code. *(Fire Prevention and Building Safety Commission; 675 IAC 14-4.3-11; filed Jun 13, 2005, 3:00 p.m.: 28 IR 3263, eff 90 days after filing with the Secretary of State; readopted filed Aug 4, 2011, 8:35 a.m.: 20110831-IR-675110254RFA)*

675 IAC 14-4.3-12 Section R301.2.2.1.2; alternative determination of seismic design category E

Authority: IC 22-13-2-2; IC 22-13-2-13
Affected: IC 22-12; IC 22-13; IC 22-14; IC 22-15; IC 36-7

Sec. 12. Delete SECTION R301.2.2.1.2. *(Fire Prevention and Building Safety Commission; 675 IAC 14-4.3-12; filed Jun 13, 2005, 3:00 p.m.: 28 IR 3263, eff 90 days after filing with the Secretary of State; readopted filed Aug 4, 2011, 8:35 a.m.: 20110831-IR-675110254RFA)*

675 IAC 14-4.3-13 Section R301.2.2.2; seismic limitations

Authority: IC 22-13-2-2; IC 22-13-2-13
Affected: IC 22-12; IC 22-13; IC 22-14; IC 22-15; IC 36-7

Sec. 13. Delete SECTION R301.2.2.2. *(Fire Prevention and Building Safety Commission; 675 IAC 14-4.3-13; filed Jun 13, 2005, 3:00 p.m.: 28 IR 3263, eff 90 days after filing with the Secretary of State; readopted filed Aug 4, 2011, 8:35 a.m.: 20110831-IR-675110254RFA)*

675 IAC 14-4.3-13.5 Section R301.2.2.2.1; weight of materials

Authority: IC 22-13-2-2; IC 22-13-2-13
Affected: IC 22-12; IC 22-13; IC 22-14; IC 22-15; IC 36-7

Sec. 13.5. Make the following changes to Section R301.2.2.2.1:

(1) Change the first sentence to read as follows: Average dead loads shall not exceed 15 psf (0.72 kN/m^2) for the combined roof and ceiling assemblies (on a horizontal projection) or 10 psf (0.48 kN/m^2) for floor assemblies, except as further limited by Section R301.2.2.

(2) Change the exception to read as follows: Exceptions: 1. Roof and ceiling dead loads not exceeding 25 psf (1.19 kN/m^2) shall be permitted provided the wall bracing amounts in Chapter 6 are increased in accordance with Table R301.2.2.2.1.

(3) Add two (2) exceptions to read as follows:

2. Light-frame walls with stone or masonry veneer shall be permitted in accordance with the provisions of Sections R702.1 and R703.

3. Fireplaces and chimneys shall be permitted in accordance with Chapter 10.

(Fire Prevention and Building Safety Commission; 675 IAC 14-4.3-13.5; filed Mar 6, 2008, 11:13 a.m.: 20080402-IR-675070483FRA; readopted filed Aug 4, 2011, 8:35 a.m.: 20110831-IR-675110254RFA)

675 IAC 14-4.3-14 Section R301.2.2.2.2; irregular buildings

Authority: IC 22-13-2-2; IC 22-13-2-13
Affected: IC 22-12; IC 22-13; IC 22-14; IC 22-15; IC 36-7

Sec. 14. Delete SECTION R301.2.2.2.2. *(Fire Prevention and Building Safety Commission; 675 IAC 14-4.3-14; filed Jun 13, 2005, 3:00 p.m.: 28 IR 3263, eff 90 days after filing with the Secretary of State; readopted filed Aug 4, 2011, 8:35 a.m.: 20110831-IR-675110254RFA)*

675 IAC 14-4.3-15 Section R301.2.2.3; Seismic Design Category C

Authority: IC 22-13-2-2; IC 22-13-2-13
Affected: IC 22-12; IC 22-13; IC 22-14; IC 22-15; IC 36-7

Sec. 15. Make the following changes to SECTION R301.2.2.3: (a) Add "and C_1" to the title.

(b) Add "and C_1" after "Category C" in the text. *(Fire Prevention and Building Safety Commission; 675 IAC 14-4.3-15; filed Jun 13, 2005, 3:00 p.m.: 28 IR 3263, eff 90 days after filing with the Secretary of State; readopted filed Aug 4, 2011, 8:35 a.m.: 20110831-IR-675110254RFA)*

675 IAC 14-4.3-16 Section R301.2.4; flood plain construction

Authority: IC 22-13-2-2; IC 22-13-2-13
Affected: IC 22-12; IC 22-13; IC 22-14; IC 22-15; IC 36-7

Sec. 16. Delete SECTION R301.2.4 and substitute to read as follows: See local ordinance for flood plain construction. *(Fire Prevention and Building Safety Commission; 675 IAC 14-4.3-16; filed Jun 13, 2005, 3:00 p.m.: 28 IR 3263, eff 90 days after filing with the Secretary of State; readopted filed Aug 4, 2011, 8:35 a.m.: 20110831-IR-675110254RFA)*

675 IAC 14-4.3-17 Section R301.5; live load

Authority: IC 22-13-2-2; IC 22-13-2-13
Affected: IC 22-12; IC 22-13; IC 22-14; IC 22-15; IC 36-7

Sec. 17. Add a subsection to SECTION R301.5 to read as follows: R301.5.1 Live Load Reduction.

1. Tributary floor area. A structural member which supports a tributary floor area of greater than 200 square feet on a given story is permitted to be designed using a reduced uniform floor live load for each qualifying story in accordance with the following formula:

$$L = L_0 \left[0.25 + \frac{10.6}{\sqrt{A_t}} \right] \geq 0.75 \text{ for } A_t > 200 \text{ ft}^2$$

Where: A_t is the tributary area of floor surface in square feet supported by the structural member and L_0 is the floor live load from TABLE R301.5.

2. Multiple stories. When floor, roof, and attic live loads from multiple story levels are applied to a structural member, the live loads may be factored as follows:

$$L = L_1 + 0.7(L_2 + L_3 + ...)$$

Where: L_1 is the live load from TABLES R301.5 and R301.6 producing the maximum individual load effect, and L_2, L_3, and so forth are live loads from other sources or stories in accordance with TABLES R301.5 and R301.6

(Fire Prevention and Building Safety Commission; 675 IAC 14-4.3-17; filed Jun 13, 2005, 3:00 p.m.: 28 IR 3263, eff 90 days after filing with the Secretary of State; readopted filed Aug 4, 2011, 8:35 a.m.: 20110831-IR-675110254RFA)

675 IAC 14-4.3-18 Table R301.5; minimum uniformly distributed live loads

Authority: IC 22-13-2-2; IC 22-13-2-13
Affected: IC 22-12; IC 22-13; IC 22-14; IC 22-15; IC 36-7

Sec. 18. Delete TABLE R301.5 and the corresponding footnotes and substitute to read as follows:

TABLE R301.5
MINIMUM UNIFORMLY DISTRIBUTED LIVE LOADS

USE	LIVE LOAD (pounds per square foot)
Attics–nonaccessible[1]	0
Attics–accessible[2]	10
Attics–uninhabitable[3]	20
Attics–inhabitable[4]	30[5]
Balconies–exterior	60
Decks	40
Rooms other than sleeping rooms	40
Fire escapes	40
Garages[6, 8]	50
Guards and handrails[9]	200
Sleeping rooms	30
Stairs	40/300[7]

[1]Attics where attic access is not required by SECTION R807.

[2]Attics where attic access is provided as required by SECTION R807 and a disappearing stairway or a permanent stairway is not provided. This load shall be noncurrent with any other load.

[3]Attic spaces having a minimum clear height greater than 6 feet and are not capable of containing the prism described in footnote 4 and are served by a disappearing or a permanent stairway.

[4]Attic spaces that are capable of containing a rectangular prism 7 feet high by 6 feet wide by 8 feet long free of any structural member.

[5]For trusses, the 30 pounds per square foot live load shall be applied over the entire length of the truss panel that contains the prism required by footnote 4.

[6]Passenger cars only.

[7]Individual stair treads shall be designed for the uniformly distributed live load of 40 pounds per square foot or a 300 pound concentrated load acting over an area of 4 square inches, whichever produces the greater stress.

[8]Elevated garage floors shall be capable of supporting a 2,000 pound load applied over a 20 square inch area.

[9]A single concentrated load applied in any direction at any point along the top.

(Fire Prevention and Building Safety Commission; 675 IAC 14-4.3-18; filed Jun 13, 2005, 3:00 p.m.: 28 IR 3264, eff 90 days after filing with the Secretary of State; readopted filed Aug 4, 2011, 8:35 a.m.: 20110831-IR-675110254RFA)

675 IAC 14-4.3-19 Section R302.1; exterior walls

Authority: IC 22-13-2-2; IC 22-13-2-13
Affected: IC 22-12; IC 22-13; IC 22-14; IC 22-15; IC 36-7

Sec. 19. Change SECTION R302.1 as follows: (a) Delete the last sentence of the first paragraph and the first exception without substitution.

(b) Delete the exception to the second paragraph and substitute to read as follows:

EXCEPTIONS: 1. Tool and storage sheds, playhouses, and similar structures are not required to provide wall protection based on location on the lot. Projections beyond the exterior of the structure shall not extend over the lot line.

2. Where structures are placed closer than 3 feet to the property lines, the one-hour fire-resistive rating shall not apply if a perpetual, platted, and recorded easement creates a nonbuildable separation of at least 6 feet between structures on adjacent properties.

(Fire Prevention and Building Safety Commission; 675 IAC 14-4.3-19; filed Jun 13, 2005, 3:00 p.m.: 28 IR 3264, eff 90 days after filing with the Secretary of State; readopted filed Aug 4, 2011, 8:35 a.m.: 20110831-IR-675110254RFA)

675 IAC 14-4.3-20 Section R302.2; openings

Authority: IC 22-13-2-2; IC 22-13-2-13
Affected: IC 22-12; IC 22-13; IC 22-14; IC 22-15; IC 36-7

Sec. 20. Add Exception 3 to the end of SECTION R302.2 to read as follows: 3. Where structures are placed closer than 3 feet to the property line, the limitation on openings in exterior walls shall not apply if a perpetual, platted, and recorded easement creates a nonbuildable separation of at least 6 feet between structures on adjacent properties. *(Fire Prevention and Building Safety Commission; 675 IAC 14-4.3-20; filed Jun 13, 2005, 3:00 p.m.: 28 IR 3264, eff 90 days after filing with the Secretary of State; readopted filed Aug 4, 2011, 8:35 a.m.: 20110831-IR-675110254RFA)*

675 IAC 14-4.3-21 Section R303.1; habitable rooms

Authority: IC 22-13-2-2; IC 22-13-2-13
Affected: IC 22-12; IC 22-13; IC 22-14; IC 22-15; IC 36-7

Sec. 21. Delete the third sentence of Section R303.1 and substitute to read as follows: Ventilation openings shall be readily accessible and operable. *(Fire Prevention and Building Safety Commission; 675 IAC 14-4.3-21; filed Jun 13, 2005, 3:00 p.m.: 28 IR 3265, eff 90 days after filing with the Secretary of State; filed Mar 6, 2008, 11:13 a.m.: 20080402-IR-675070483FRA; readopted filed Aug 4, 2011, 8:35 a.m.: 20110831-IR-675110254RFA)*

675 IAC 14-4.3-22 Section R303.4.2; exhaust openings

Authority: IC 22-13-2-2; IC 22-13-2-13
Affected: IC 22-12; IC 22-13; IC 22-14; IC 22-15; IC 36-7

Sec. 22. Delete SECTION R303.4.2. *(Fire Prevention and Building Safety Commission; 675 IAC 14-4.3-22; filed Jun 13, 2005, 3:00 p.m.: 28 IR 3265, eff 90 days after filing with the Secretary of State; readopted filed Aug 4, 2011, 8:35 a.m.: 20110831-IR-675110254RFA)*

675 IAC 14-4.3-23 Section R303.6; stairway illumination

Authority: IC 22-13-2-2; IC 22-13-2-13
Affected: IC 22-12; IC 22-13; IC 22-14; IC 22-15; IC 36-7

Sec. 23. In the first paragraph, delete everything after the first sentence and substitute to read as follows: For interior stairs the artificial light source shall be capable of illuminating treads and landings to levels not less than 1 foot-candle (11 lux) measured at the center of treads and landings. Exterior stairways shall be provided with an artificial light source located so that the top landing of the stairway is illuminated. Exterior stairways providing access to a basement from the outside grade level shall be provided with an artificial light source located so that the bottom landing of the stairway is illuminated. *(Fire Prevention and Building Safety Commission; 675 IAC 14-4.3-23; filed Jun 13, 2005, 3:00 p.m.: 28 IR 3265, eff 90 days after filing with the Secretary of State; readopted filed Aug 4, 2011, 8:35 a.m.: 20110831-IR-675110254RFA)*

675 IAC 14-4.3-23.5 Section R304.3; minimum dimensions

Authority: IC 22-13-2-2; IC 22-13-2-13
Affected: IC 22-12; IC 22-13; IC 22-14; IC 22-15; IC 36-7

Sec. 23.5. Delete the first sentence of Section R304.3 and substitute to read as follows: Habitable rooms shall not be less than 7 feet (2,134 mm) in either horizontal dimension for the purpose of Section R304.2. *(Fire Prevention and Building Safety Commission; 675 IAC 14-4.3-23.5; filed Mar 6, 2008, 11:13 a.m.: 20080402-IR-675070483FRA; readopted filed Aug 4, 2011, 8:35 a.m.: 20110831-IR-675110254RFA)*

675 IAC 14-4.3-24 Section R305.1; minimum height

Authority: IC 22-13-2-2; IC 22-13-2-13
Affected: IC 22-12; IC 22-13; IC 22-14; IC 22-15; IC 36-7

Sec. 24. Change Exception 4 to SECTION R305.1 to read as follows: Bathrooms shall have a minimum of 6 feet 8 inches (2,036 mm) at the center of the front clearance area for fixtures as shown in Figure R307.2. Ceiling height above fixtures shall be such that the fixture may be used for its intended purpose. A shower or tub equipped with a showerhead shall have a minimum ceiling height of 6 feet 8 inches (2,036 mm) above a minimum area 30 inches (762 mm) by 30 inches (762 mm) at the showerhead. *(Fire Prevention and Building Safety Commission; 675 IAC 14-4.3-24; filed Jun 13, 2005, 3:00 p.m.: 28 IR 3265, eff 90 days after filing with the Secretary of State; readopted filed Aug 4, 2011, 8:35 a.m.: 20110831-IR-675110254RFA)*

675 IAC 14-4.3-25 Section R308.4; hazardous locations

Authority: IC 22-13-2-2; IC 22-13-2-13
Affected: IC 22-12; IC 22-13; IC 22-14; IC 22-15; IC 36-7

Sec. 25. Make the following change to SECTION R308.4: Change Exception 5 to read as follows: 5. Glazing in SECTION 308.4, Item 6, when a protective bar is installed on the accessible sides of the glazing 34 inches (864 mm) to 38 inches (965 mm) above the floor. The bar shall be capable of withstanding a horizontal load of 50 pounds (22.68 kg) per linear foot without contacting the glass and be a minimum of 1½ inches (38 mm) in height. *(Fire Prevention and Building Safety Commission; 675 IAC 14-4.3-25; filed Jun 13, 2005, 3:00 p.m.: 28 IR 3265, eff 90 days after filing with the Secretary of State; readopted filed Aug 4, 2011, 8:35 a.m.: 20110831-IR-675110254RFA)*

675 IAC 14-4.3-26 Section R309; garages and carports

Authority: IC 22-13-2-2; IC 22-13-2-13
Affected: IC 22-12; IC 22-13; IC 22-14; IC 22-15; IC 36-7

Sec. 26. Change the title and text of Section R309 as follows:

(1) Change the title of Section R309 to read as follows: GARAGES, CARPORTS, OR ACCESSORY STRUCTURES.

(2) Change the text of Section R309.2 to read as follows: The garage shall be separated from the residence and its attic area by a smoke separation of not less than 1/2 inch (13 mm) gypsum board applied to the garage side of the framing.

Exception: Pull down stairs may be installed in garage/attic separations when installed in a manner that resists the passage of smoke.

(3) Change the second paragraph of Sections R309.3 and R309.4 to read as follows: The area of floor used for parking of automobiles or other vehicles shall be sloped to facilitate the movement of liquids to an approved drain or toward the main vehicle entry doorway.

(4) Delete the title and text of Section R309.5, Flood hazard areas, and substitute to read as follows: R309.5 Detached garages, carports, or accessory structures.

R309.5.1 Separation. Detached garages, carports, and accessory structures shall be separated from dwellings by not less than 6 feet (1,829 mm) of open space, except that such space may be roofed in accordance with Chapters 8 and 9 of this code. Detached garages, carports, and accessory structures separated from dwellings by less than 6 feet (1,829 mm) of open space shall be considered the same as attached garages, carports, and accessory structures. In no case shall garages, carports, or accessory structures be attached to the dwelling when the footings of the structure to be attached are above the frost line and the adjacent footings of the dwelling are at or below the frost line unless approved by the building official.

R309.5.2 Requirements. Detached garages, detached carports, or accessory structures shall be constructed to applicable sections of this code unless otherwise noted in TABLE R309. Any habitable area(s) located within a detached garage or accessory structure shall meet all applicable sections of this code and shall be provided with an exit door as specified in Section R311.

(5) Add TABLE R309 at the end of Section R309 to read as follows:

TABLE R309

DETACHED GARAGES, DETACHED CARPORTS, OR ACCESSORY STRUCTURES

CONSTRUCTION REQUIREMENTS	Portable 200 Square Feet Maximum	Monolithic[1] Footings 721 Square Feet Maximum	Structures with Conventional Foundation
Footings and Foundations	No Requirements	8" W × 18" D[2] or 12" W × 12" D[2]	Indiana Residential Code
Floors	No Requirements	Indiana Residential Code	
Exterior Walls	No Requirements		
Girders and Headers	No Requirements		
Roof Systems	No Requirements		
Electrical Power Limits	One 20 Amp. Circuit		
Water Supply/Sanitation	Not Allowed	[1]	
Permanent Heat	Not Allowed	[1]	
Maximum Number of Stories	1	1[3]	3

NOTES:

[1]In structures utilizing monolithic floor systems, the water and sanitation systems and permanent heating facilities may be installed when approved flexible connections are provided.

[2]6 × 6 - W2.9 × W2.9 welded wire fabric or equivalent is required when monolithic slab footing system is used.

[3]One story unless otherwise approved by the building official.

(Fire Prevention and Building Safety Commission; 675 IAC 14-4.3-26; filed Jun 13, 2005, 3:00 p.m.: 28 IR 3265, eff 90 days after filing with the Secretary of State; filed Mar 6, 2008, 11:13 a.m.: 20080402-IR-675070483FRA; readopted filed Aug 4, 2011, 8:35 a.m.: 20110831-IR-675110254RFA)

675 IAC 14-4.3-27 Section R310; emergency escape and rescue openings

Authority: IC 22-13-2-2; IC 22-13-2-13
Affected: IC 22-12; IC 22-13; IC 22-14; IC 22-15; IC 36-7

Sec. 27. Change Section R310 as follows:

(1) Change the first sentence of Section R310.1 to read as follows: Every sleeping room shall have at least one openable emergency escape and rescue opening that opens directly to the exterior.

(2) Delete the second sentence of Section R310.1 without substitution.

(3) In Section R310.1.2, change "24 inches (610 mm)" to "22 inches (559 mm)".

(4) Add Section R310.1.5 to read as follows: R310.1.5 Sleeping room replacement window alterations. When replacing existing sleeping room windows, at least one of the replacement windows within that sleeping room shall comply with Section R310.5. Replacement windows that do not meet the current emergency escape requirements of Section R310, without structural alterations to the dwelling, may be installed as long as they meet the following requirements.

1. Replacement window installation shall not reduce the existing net clear opening by more than 6 inches horizontally and 6 inches vertically, except that awning replacement windows shall not reduce the existing net clear opening by more than 3 inches vertically.

2. In no case shall the replacement window net clear opening height be less than 22 inches (559 mm) and the net clear opening width be less than 20 inches (508 mm).

3. Double hung or sliding replacement windows shall have both sashes removable without the use of a key or tool. Single hung installations are not allowed by this section.

4. Casement and awning replacement windows may obtain the required net clear opening with the use of egress hardware.

5. If the replacement window cannot meet the minimum requirements listed in subdivisions 1, 2, 3, and 4, the existing window shall be replaced with a like window without reducing the existing net clear opening.

(5) Add Section R310.3.1 to read as follows: R 310.3.1 Door swing. In areas subject to snow or ice accumulation, doors installed at the bottom of bulkhead enclosures to basements that serve as escape and rescue openings shall swing into the structure.

(6) Add Section R310.5 to read as follows: R310.5 Emergency escape windows under decks and porches. Emergency escape windows are allowed to be installed under decks and porches provided the location of the deck or porch allows an unobstructed passageway, not less than 30 inches (762 mm) high, 30 inches (762 mm) wide and not more than 20 feet (6.1 m) in length, to a yard or court.

(Fire Prevention and Building Safety Commission; 675 IAC 14-4.3-27; filed Jun 13, 2005, 3:00 p.m.: 28 IR 3266, eff 90 days after filing with the Secretary of State; filed Mar 6, 2008, 11:13 a.m.: 20080402-IR-675070483FRA; readopted filed Aug 4, 2011, 8:35 a.m.: 20110831-IR-675110254RFA)

675 IAC 14-4.3-28 Section R311.4.3; landings at doors

Authority: IC 22-13-2-2; IC 22-13-2-13
Affected: IC 22-12; IC 22-13; IC 22-14; IC 22-15; IC 36-7

Sec. 28. Delete the title and text of Section R311.4.3 and substitute to read as follows:

R311.4.3 Landings at exterior doors. There shall be a landing on each side of each exterior door. The width of each landing shall not be less than the width of the door served. Every landing shall have a minimum dimension of 36 inches (914 mm) measured in the direction of travel. Exterior landings shall be permitted to have a slope not to exceed.25 units vertical in 12 units horizontal.

R311.4.3.1 Landings at the required exit door. Landings on the interior side of the required exit door shall not be more than 1.5 inches (38 mm) lower than the top of the threshold. Landings on the exterior side of the required exit door shall not be more than 8.25 inches (209 mm) below the top of the threshold. Where exterior landings serving the required exit door are not at grade level, they shall be provided with access to grade by steps, a stairway in accordance with Section R311.5 or a ramp in accordance with Section R311.6.

R311.4.3.2 Landings at the non-required exterior door. Doors, other than the required exit door, shall have landings installed not lower than 8.25 inches (209 mm) below the top of the threshold.

Exceptions:

1. Where the distance in height, measured between the top of the threshold and a floor below, is 16.5 inches (418 mm) or less, a single step with tread depth of at least 11 inches (279 mm) is permitted to be installed instead of a landing.

2. When a stairway of three or fewer risers is located at a non-required exterior door, a landing is not required for the exterior side of the non-required exterior door, provided the door, other than the screen or storm door, does not swing over the stairway.

(Fire Prevention and Building Safety Commission; 675 IAC 14-4.3-28; filed Jun 13, 2005, 3:00 p.m.: 28 IR 3266, eff 90 days after filing with the Secretary of State; filed Mar 6, 2008, 11:13 a.m.: 20080402-IR-675070483FRA; readopted filed Aug 4, 2011, 8:35 a.m.: 20110831-IR-675110254RFA)

675 IAC 14-4.3-29 Section R311.4.4; type of lock or latch

Authority: IC 22-13-2-2; IC 22-13-2-13
Affected: IC 22-12; IC 22-13; IC 22-14; IC 22-15; IC 36-7

Sec. 29. Delete "egress" between "all" and "doors" and delete "or special knowledge or effort" from SECTION R311.4.4. *(Fire Prevention and Building Safety Commission; 675 IAC 14-4.3-29; filed Jun 13, 2005, 3:00 p.m.: 28 IR 3267, eff 90 days after filing with the Secretary of State; readopted filed Aug 4, 2011, 8:35 a.m.: 20110831-IR-675110254RFA)*

675 IAC 14-4.3-30 Section R311.5.3.1; riser height

Authority: IC 22-13-2-2; IC 22-13-2-13
Affected: IC 22-12; IC 22-13; IC 22-14; IC 22-15; IC 36-7

Sec. 30. In the first sentence of SECTION R311.5.3.1, delete "7¾ inches (196 mm)" and substitute "8¼ inches (210 mm)". *(Fire Prevention and Building Safety Commission; 675 IAC 14-4.3-30; filed Jun 13, 2005, 3:00 p.m.: 28 IR 3267, eff 90 days after filing with the Secretary of State; readopted filed Aug 4, 2011, 8:35 a.m.: 20110831-IR-675110254RFA)*

675 IAC 14-4.3-31 Section R311.5.3.2; tread depth

Authority: IC 22-13-2-2; IC 22-13-2-13
Affected: IC 22-12; IC 22-13; IC 22-14; IC 22-15; IC 36-7

Sec. 31. In the first and fourth sentences of SECTION R311.5.3.2, delete "10 inches (254 mm)" and substitute "9 inches (229 mm)". *(Fire Prevention and Building Safety Commission; 675 IAC 14-4.3-31; filed Jun 13, 2005, 3:00 p.m.: 28 IR 3267, eff 90 days after filing with the Secretary of State; readopted filed Aug 4, 2011, 8:35 a.m.: 20110831-IR-675110254RFA)*

675 IAC 14-4.3-32 Section R311.5.6.2; continuity

Authority: IC 22-13-2-2; IC 22-13-2-13
Affected: IC 22-12; IC 22-13; IC 22-14; IC 22-15; IC 36-7

Sec. 32. (a) Change the first sentence of Section R311.5.6.2 to read as follows: Handrails for stairways shall serve each tread for the full length of the flight, from a point directly above the top riser of the flight to a point directly above the lowest riser of the flight.

(b) Change Exception 1 by adding "or by a landing" after "turn" and before the ".". *(Fire Prevention and Building Safety Commission; 675 IAC 14-4.3-32; filed Jun 13, 2005, 3:00 p.m.: 28 IR 3267, eff 90 days after filing with the Secretary of State; filed Mar 6, 2008, 11:13 a.m.: 20080402-IR-675070483FRA; readopted filed Aug 4, 2011, 8:35 a.m.: 20110831-IR-675110254RFA)*

675 IAC 14-4.3-33 Section R311.5.6.3; handrail grip size

Authority: IC 22-13-2-2; IC 22-13-2-13
Affected: IC 22-12; IC 22-13; IC 22-14; IC 22-15; IC 36-7

Sec. 33. Delete the text of SECTION 311.5.6.3 and substitute to read as follows: The handrail grip size portion of handrails shall have a circular cross section of 1¼ inches (32 mm) minimum to 2 f inches (80 mm) maximum. Other handrail shapes that provide an equivalent grasping surface are permissible. Edges shall have a minimum radius of c inch (3.2 mm). *(Fire Prevention and Building Safety Commission; 675 IAC 14-4.3-33; filed Jun 13, 2005, 3:00 p.m.: 28 IR 3267, eff 90 days after filing with the Secretary of State; readopted filed Aug 4, 2011, 8:35 a.m.: 20110831-IR-675110254RFA)*

675 IAC 14-4.3-34 Section R311.5.8.1; bulkhead enclosure stairways (Repealed)

Sec. 34. *(Repealed by Fire Prevention and Building Safety Commission; filed Mar 6, 2008, 11:13 a.m.: 20080402-IR-675070483FRA)*

675 IAC 14-4.3-34.5 Section R311.6.1; maximum slope

Authority: IC 22-13-2-2; IC 22-13-2-13
Affected: IC 22-12; IC 22-13; IC 22-14; IC 22-15; IC 36-7

Sec. 34.5. Change Section R311.6.1 to read as follows: Ramps shall have a maximum slope of one unit vertical in twelve units horizontal (8.3 percent slope).

Exception: Where it is technically infeasible to comply because of site constraints, ramps may have a maximum slope of one unit vertical in eight units horizontal (12.5 percent slope).

(Fire Prevention and Building Safety Commission; 675 IAC 14-4.3-34.5; filed Mar 6, 2008, 11:13 a.m.: 20080402-IR-675070483FRA; readopted filed Aug 4, 2011, 8:35 a.m.: 20110831-IR-675110254RFA)

675 IAC 14-4.3-35 Section R312.1; guards required

Authority: IC 22-13-2-2; IC 22-13-2-13
Affected: IC 22-12; IC 22-13; IC 22-14; IC 22-15; IC 36-7

Sec. 35. Change SECTION R312.1 as follows: (a) In the first sentence, add ", decks" between "balconies" and "or".

(b) Add a sentence at the end of the section to read as follows: Guards that are installed on porches, balconies, decks, or raised floor surfaces that are 30 inches (762 mm) or less above the floor or grade are not required to comply with SECTION 312. *(Fire Prevention and Building Safety Commission; 675 IAC 14-4.3-35; filed Jun 13, 2005, 3:00 p.m.: 28 IR 3267, eff 90 days after filing with the Secretary of State; readopted filed Aug 4, 2011, 8:35 a.m.: 20110831-IR-675110254RFA)*

675 IAC 14-4.3-36 Section R312.2; guard opening limitations

Authority: IC 22-13-2-2; IC 22-13-2-13
Affected: IC 22-12; IC 22-13; IC 22-14; IC 22-15; IC 36-7

Sec. 36. Add, in the first sentence of Section R312.2, ", decks" between "balconies" and "and". *(Fire Prevention and Building Safety Commission; 675 IAC 14-4.3-36; filed Jun 13, 2005, 3:00 p.m.: 28 IR 3267, eff 90 days after filing with the Secretary of State; filed Mar 6, 2008, 11:13 a.m.: 20080402-IR-675070483FRA; readopted filed Aug 4, 2011, 8:35 a.m.: 20110831-IR-675110254RFA)*

675 IAC 14-4.3-37 Section R313; smoke alarms

Authority: IC 22-13-2-2; IC 22-13-2-13
Affected: IC 22-12; IC 22-13; IC 22-14; IC 22-15; IC 36-7

Sec. 37. Delete the text of Section R313 and substitute to read as follows: R313.1 Labeling. Each smoke alarm shall be listed:
R313.2 Required smoke alarm locations. At least one smoke alarm shall be installed in each of the following locations:

(a) In the living area remote from the kitchen and cooking appliances. Smoke alarms located within 20 feet (6.1 m) horizontally of a cooking appliance must incorporate a temporary silencing feature or be photoelectric type.

(b) In each room designed for sleeping.

(c) On the ceiling of the upper level near the top or above each stairway, other than a basement stairway, in any multistory dwelling. The alarm shall be located so that smoke rising in the stairway cannot be prevented from reaching the alarm by an intervening door or obstruction.

(d) On the basement ceiling near the stairway.

R313.2.1 Alterations and additions. When interior alterations or additions requiring a permit occur, or when one or more sleeping rooms are added or created in existing dwellings, the individual dwelling unit shall be provided with smoke alarms located as required for new dwellings; the smoke alarms shall be interconnected and hard wired.

Exceptions:

1. Smoke alarms in existing areas shall not be required to meet the requirements of R313.5 where the alterations do not result in the removal of the interior wall or ceiling finishes exposing the structure unless there is an attic, crawlspace, or basement available that could provide access for hard wiring and interconnection without the removal of interior finishes.

2. Repairs are exempt from the requirements of this section.

R313.3 Prohibited smoke alarm locations. A smoke alarm required under this section shall not be placed:

1. within 3 feet (914 mm) horizontally from any grille moving conditioned air within the living space; or

2. in any location or environment that is prohibited by the terms of the listing.

R313.4 Mounting requirements. Smoke alarms required by Section R313.2 shall be mounted in accordance with their listing, installation instructions, and the requirements of this section.

R313.4.1 Flat Ceilings. In rooms with flat, peaked sloping or single slope ceilings with a slope of less than 1.5/12, smoke alarms shall be mounted either:

1. on the ceiling at least 4 inches (102 mm) from each wall; or

2. on a wall with the top of the alarm not less than 4 inches (102 mm) below the ceiling and not farther from the ceiling than 12 inches (305 mm) or the distance from the ceiling specified in the smoke alarm manufacturer's listing and installation instructions, whichever is less.

R313.4.2 Peaked Sloping Ceilings. In rooms with peaked sloping ceilings with a slope of 1.5/12 or greater, smoke alarms shall be:

1. mounted on the ceiling or wall within 3 feet (914 mm) measured horizontally, from the peak of the ceiling;

2. at least 4 inches (102 mm), measured vertically, below the peak of the ceiling; and

3. at least 4 inches (102 mm) from any projecting structural element.

R313.4.3 Single Slope Ceilings. In rooms with single slope ceilings with a slope of 1.5/12 or greater, smoke alarms shall be:

1. mounted on the ceiling or wall within 3 feet (914 mm), measured horizontally, of the high point of the ceiling; and

2. not closer than 4 inches (102 mm) from any adjoining wall surfaces or any projecting structural element.

R313.4.4 Visible notification appliances. In addition to the smoke alarms required pursuant to this section, listed visible notification appliances, when installed, shall meet the following:

R313.4.4.1 Candela Rating-Sleeping Room. A visible notification appliance, when installed in a room designed for sleeping, shall have a minimum rating of 177 candela, except that when the visible notification appliance is wall-mounted or suspended more than 24 inches (610 mm) below the ceiling, a minimum rating of 110 candela is permitted.

R313.4.4.2 Candela Rating-Nonsleeping Room. A visible notification appliance, when installed in an area other than a room designed for sleeping, shall have a minimum rating of 15 candela.

R313.5 Connection to Power Source. Each smoke alarm shall be powered from:

1. the electrical system of the home as the primary power source and a battery as a secondary power source; or

2. a battery rated for a 10 year life, provided the smoke alarm is listed for use with a 10 year battery.

Exception: Visible notification appliances are required to operate from the primary power source but are not

required to operate from a secondary power source.

R313.5.1 Circuitry. Each smoke alarm whose primary power source is the home electrical system shall be mounted on an electrical outlet box and be connected by a permanent wiring method to a general branch circuit. The same branch circuit may serve more than one smoke alarm. The branch circuit for the alarm shall not include any switches between the branch circuit overcurrent protective device and the alarm and shall not be protected by a ground-fault circuit-interrupter.

R313.5.2 Interconnection. When more than one smoke alarm is required to be installed within an individual dwelling unit, the alarm devices shall be interconnected in such a manner that the actuation of one alarm will activate all of the alarms in the individual unit.

(Fire Prevention and Building Safety Commission; 675 IAC 14-4.3-37; filed Jun 13, 2005, 3:00 p.m.: 28 IR 3267, eff 90 days after filing with the Secretary of State; filed Mar 6, 2008, 11:13 a.m.: 20080402-IR-675070483FRA; readopted filed Aug 4, 2011, 8:35 a.m.: 20110831-IR-675110254RFA)

675 IAC 14-4.3-38 Section R314.2.3; attics and crawlspaces

Authority: IC 22-13-2-2; IC 22-13-2-13
Affected: IC 22-12; IC 22-13; IC 22-14; IC 22-15; IC 36-7

Sec. 38. Delete SECTION R314.2.3 and substitute to read as follows: Within an attic or crawlspace, foam plastics shall be protected against ignition by 1½ inch thick mineral fiber insulation, or ¼ inch thick plywood, or d inch particleboard, or ¼ inch hardboard, or d inch gypsum wallboard or corrosion-resistant steel having a base metal thickness of 0.016 inch or other approved material installed in such a manner that the foam plastic is not exposed.

EXCEPTION: Foam plastic insulation may be installed on the walls of attics and crawlspaces with no covering applied provided all the following conditions are met:

1. The maximum thickness/density is within the following:
   a. Maximum 4 inch thickness with a maximum density of 4.0 pcf.
   b. Up to 2 inch thickness with a maximum density of 2.5 pcf.
   c. Up to 1 inch thickness with a maximum density of 2.0 pcf.
2. The maximum flame spread is 25.
3. The maximum smoke development rating is 450.
4. The entry to the attic or crawlspace is made only for service or maintenance (not used for storage).
5. There are not interconnected basement areas.
6. The air in the attic or crawlspace is not circulated to other parts of the building.
7. Where fuel-burning appliances other than direct vent appliances or exposed (not sealed) motors are located more than 10 feet away from the foam insulation in the attic or crawlspace.

(Fire Prevention and Building Safety Commission; 675 IAC 14-4.3-38; filed Jun 13, 2005, 3:00 p.m.: 28 IR 3268, eff 90 days after filing with the Secretary of State; readopted filed Aug 4, 2011, 8:35 a.m.: 20110831-IR-675110254RFA)

675 IAC 14-4.3-38.5 Section R317.1; two-family dwellings

Authority: IC 22-13-2-2; IC 22-13-2-13
Affected: IC 22-12; IC 22-13; IC 22-14; IC 22-15; IC 36-7

Sec. 38.5. Change "Exception", in R317.1, to "Exceptions", number the exception as 1, and add a second exception to read as follows: 2. Wall assemblies need not extend through attic spaces of two-family dwelling structures under single ownership when the ceiling is protected by not less than 5/8-inch Type X gypsum board and an attic draft stop constructed as specified in R502.12.1 is provided above and along the wall assembly separating the dwellings. The structural wall framing supporting the ceiling shall also be protected by not less than 1/2-inch gypsum board or equivalent on the interior surface. *(Fire Prevention and Building Safety Commission; 675 IAC 14-4.3-38.5; filed Mar 6, 2008, 11:13 a.m.: 20080402-IR-675070483FRA; readopted filed Aug 4, 2011, 8:35 a.m.: 20110831-IR-675110254RFA)*

675 IAC 14-4.3-39 Section R317.3.2; membrane penetrations

Authority: IC 22-13-2-2; IC 22-13-2-13
Affected: IC 22-12; IC 22-13; IC 22-14; IC 22-15; IC 36-7

Sec. 39. In SECTION R317.3.2, change Exceptions 1 and 2 by deleting "as follows:" and substituting "by any of the following:". *(Fire Prevention and Building Safety Commission; 675 IAC 14-4.3-39; filed Jun 13, 2005, 3:00 p.m.: 28 IR 3269, eff 90 days after filing with the Secretary of State; readopted filed Aug 4, 2011, 8:35 a.m.: 20110831-IR-675110254RFA)*

675 IAC 14-4.3-40 Section R318.1; moisture control

Authority: IC 22-13-2-2; IC 22-13-2-13
Affected: IC 22-12; IC 22-13; IC 22-14; IC 22-15; IC 36-7

Sec. 40. Delete Exception 3 in SECTION R318.1 without substitution. *(Fire Prevention and Building Safety Commission; 675 IAC 14-4.3-40; filed Jun 13, 2005, 3:00 p.m.: 28 IR 3269, eff 90 days after filing with the Secretary of State; readopted filed Aug 4, 2011, 8:35 a.m.: 20110831-IR-675110254RFA)*

675 IAC 14-4.3-41 Section R319.1; location required

Authority: IC 22-13-2-2; IC 22-13-2-13
Affected: IC 22-12; IC 22-13; IC 22-14; IC 22-15; IC 36-7

Sec. 41. Add a sentence at the end of Item 2 of SECTION 319.1 to read as follows: Minimum height of foundation walls above finish grade are as established in R404.1.6. *(Fire Prevention and Building Safety Commission; 675 IAC 14-4.3-41; filed Jun 13, 2005, 3:00 p.m.: 28 IR 3269, eff 90 days after filing with the Secretary of State; readopted filed Aug 4, 2011, 8:35 a.m.: 20110831-IR-675110254RFA)*

675 IAC 14-4.3-42 Section R319.1.2; R319.1; location required

Authority: IC 22-13-2-2; IC 22-13-2-13
Affected: IC 22-12; IC 22-13; IC 22-14; IC 22-15; IC 36-7

Sec. 42. (a) Change Item 3 to read as follows: Sills and sleepers on a concrete or masonry slab that is in direct contact with the ground unless separated from such slab by an impervious moisture barrier, or unless such slab is separated from the ground by a vapor retarder.

(b) Add an exception to SECTION R319.1, Item 7, to read as follows: EXCEPTION: Exterior walls, below grade complying with SECTION R406. *(Fire Prevention and Building Safety Commission; 675 IAC 14-4.3-42; filed Jun 13, 2005, 3:00 p.m.: 28 IR 3269, eff 90 days after filing with the Secretary of State; readopted filed Aug 4, 2011, 8:35 a.m.: 20110831-IR-675110254RFA)*

675 IAC 14-4.3-43 Section R319.1.2; geographical areas

Authority: IC 22-13-2-2; IC 22-13-2-13
Affected: IC 22-12; IC 22-13; IC 22-14; IC 22-15; IC 36-7

Sec. 43. Change SECTION R319.1.2 to read as follows: Approved naturally durable or pressure preservatively treated wood shall be used for those portions of wood members that form the structural supports of buildings, balconies, decks, porches, or similar permanent building appurtenances when such members are exposed to the weather without adequate protection from a roof, eave, overhang, or other covering that would prevent moisture or water accumulation on the surface or at joints between members. Such members may include the following:

1. Horizontal members, such as girders, joists, and decking.
2. Vertical members, such as posts, poles, and columns.
3. Both horizontal and vertical members.

(Fire Prevention and Building Safety Commission; 675 IAC 14-4.3-43; filed Jun 13, 2005, 3:00 p.m.: 28 IR 3269, eff 90 days after

filing with the Secretary of State; readopted filed Aug 4, 2011, 8:35 a.m.: 20110831-IR-675110254RFA)

675 IAC 14-4.3-44 Section R319.1.3; post, poles, and columns
Authority: IC 22-13-2-2; IC 22-13-2-13
Affected: IC 22-12; IC 22-13; IC 22-14; IC 22-15; IC 36-7

Sec. 44. Delete, from SECTION R319.1.3, "approved pressure preservatively treated wood" without substitution. *(Fire Prevention and Building Safety Commission; 675 IAC 14-4.3-44; filed Jun 13, 2005, 3:00 p.m.: 28 IR 3269, eff 90 days after filing with the Secretary of State; readopted filed Aug 4, 2011, 8:35 a.m.: 20110831-IR-675110254RFA)*

675 IAC 14-4.3-45 Section R319.2; quality mark
Authority: IC 22-13-2-2; IC 22-13-2-13
Affected: IC 22-12; IC 22-13; IC 22-14; IC 22-15; IC 36-7

Sec. 45. Change, in SECTION R319.2, "approved by an accreditation body" to "accepted by an accreditation body". *(Fire Prevention and Building Safety Commission; 675 IAC 14-4.3-45; filed Jun 13, 2005, 3:00 p.m.: 28 IR 3269, eff 90 days after filing with the Secretary of State; readopted filed Aug 4, 2011, 8:35 a.m.: 20110831-IR-675110254RFA)*

675 IAC 14-4.3-46 Section R319.3; fasteners
Authority: IC 22-13-2-2; IC 22-13-2-13
Affected: IC 22-12; IC 22-13; IC 22-14; IC 22-15; IC 36-7

Sec. 46. Delete the first sentence of Section R319.3 and substitute to read as follows: Fasteners for pressure preservative treated wood shall be of G185 hot-dipped galvanized steel, stainless steel, silicon bronze, copper, or meet the requirements of the manufacturer of the chemicals used in the treated wood. Except for borate treated wood, aluminum fasteners, hardware, or flashing shall not be in direct contact with pressure preservative treated wood. Fasteners for fire-retardant treated wood shall be of hot-dipped galvanized steel, stainless steel, silicon bronze, copper, or meet the requirements of the manufacturer of the chemicals used in the treated wood. *(Fire Prevention and Building Safety Commission; 675 IAC 14-4.3-46; filed Jun 13, 2005, 3:00 p.m.: 28 IR 3270, eff 90 days after filing with the Secretary of State; filed Mar 6, 2008, 11:13 a.m.: 20080402-IR-675070483FRA; readopted filed Aug 4, 2011, 8:35 a.m.: 20110831-IR-675110254RFA)*

675 IAC 14-4.3-47 Section R320.1; subterranean termite control
Authority: IC 22-13-2-2; IC 22-13-2-13
Affected: IC 22-12; IC 22-13; IC 22-14; IC 22-15; IC 36-7

Sec. 47. Delete "favorable to termite damage" and substitute "subject to very heavy termite damage". *(Fire Prevention and Building Safety Commission; 675 IAC 14-4.3-47; filed Jun 13, 2005, 3:00 p.m.: 28 IR 3270, eff 90 days after filing with the Secretary of State; readopted filed Aug 4, 2011, 8:35 a.m.: 20110831-IR-675110254RFA)*

675 IAC 14-4.3-48 Section R320.4; foam plastic protection
Authority: IC 22-13-2-2; IC 22-13-2-13
Affected: IC 22-12; IC 22-13; IC 22-14; IC 22-15; IC 36-7

Sec. 48. Delete SECTION R320.4. *(Fire Prevention and Building Safety Commission; 675 IAC 14-4.3-48; filed Jun 13, 2005, 3:00 p.m.: 28 IR 3270, eff 90 days after filing with the Secretary of State; readopted filed Aug 4, 2011, 8:35 a.m.: 20110831-IR-675110254RFA)*

675 IAC 14-4.3-49 Section R322; accessibility

Authority: IC 22-13-2-2; IC 22-13-2-13
Affected: IC 22-12; IC 22-13; IC 22-14; IC 22-15; IC 36-7

Sec. 49. Delete SECTION R322. *(Fire Prevention and Building Safety Commission; 675 IAC 14-4.3-49; filed Jun 13, 2005, 3:00 p.m.: 28 IR 3270, eff 90 days after filing with the Secretary of State; readopted filed Aug 4, 2011, 8:35 a.m.: 20110831-IR-675110254RFA)*

675 IAC 14-4.3-50 Section R323; flood-resistant construction

Authority: IC 22-13-2-2; IC 22-13-2-13
Affected: IC 22-12; IC 22-13; IC 22-14; IC 22-15; IC 36-7

Sec. 50. Delete Section R323 FLOOD-RESISTANT CONSTRUCTION and substitute to read as follows: See local ordinance. *(Fire Prevention and Building Safety Commission; 675 IAC 14-4.3-50; filed Jun 13, 2005, 3:00 p.m.: 28 IR 3270, eff 90 days after filing with the Secretary of State; filed Mar 6, 2008, 11:13 a.m.: 20080402-IR-675070483FRA; readopted filed Aug 4, 2011, 8:35 a.m.: 20110831-IR-675110254RFA)*

675 IAC 14-4.3-51 Section R401.1; application

Authority: IC 22-13-2-2; IC 22-13-2-13
Affected: IC 22-12; IC 22-13; IC 22-14; IC 22-15; IC 36-7

Sec. 51. Delete the exceptions in Section R401.1. *(Fire Prevention and Building Safety Commission; 675 IAC 14-4.3-51; filed Jun 13, 2005, 3:00 p.m.: 28 IR 3270, eff 90 days after filing with the Secretary of State; filed Mar 6, 2008, 11:13 a.m.: 20080402-IR-675070483FRA; readopted filed Aug 4, 2011, 8:35 a.m.: 20110831-IR-675110254RFA)*

675 IAC 14-4.3-52 Section R401.3; drainage

Authority: IC 22-13-2-2; IC 22-13-2-13
Affected: IC 22-12; IC 22-13; IC 22-14; IC 22-15; IC 36-7

Sec. 52. Delete the first sentence of SECTION R401.3. *(Fire Prevention and Building Safety Commission; 675 IAC 14-4.3-52; filed Jun 13, 2005, 3:00 p.m.: 28 IR 3270, eff 90 days after filing with the Secretary of State; readopted filed Aug 4, 2011, 8:35 a.m.: 20110831-IR-675110254RFA)*

675 IAC 14-4.3-53 Section R402.1.2; wood treatment

Authority: IC 22-13-2-2; IC 22-13-2-13
Affected: IC 22-12; IC 22-13; IC 22-14; IC 22-15; IC 36-7

Sec. 53. Change, in the first sentence of SECTION R402.1.2, "accredited agency" to "approved agency". *(Fire Prevention and Building Safety Commission; 675 IAC 14-4.3-53; filed Jun 13, 2005, 3:00 p.m.: 28 IR 3270, eff 90 days after filing with the Secretary of State; readopted filed Aug 4, 2011, 8:35 a.m.: 20110831-IR-675110254RFA)*

675 IAC 14-4.3-54 Section R403.1; general

Authority: IC 22-13-2-2; IC 22-13-2-13
Affected: IC 22-12; IC 22-13; IC 22-14; IC 22-15; IC 36-7

Sec. 54. Delete, in the first sentence of SECTION R403.1, "continuous". *(Fire Prevention and Building Safety Commission; 675 IAC 14-4.3-54; filed Jun 13, 2005, 3:00 p.m.: 28 IR 3270, eff 90 days after filing with the Secretary of State; readopted filed Aug 4, 2011, 8:35 a.m.: 20110831-IR-675110254RFA)*

675 IAC 14-4.3-55 Section R403.1.1; minimum size

Authority: IC 22-13-2-2; IC 22-13-2-13
Affected: IC 22-12; IC 22-13; IC 22-14; IC 22-15; IC 36-7

Sec. 55. (a) In SECTION R403.1.1, delete the fifth sentence and substitute to read as follows: The minimum size of footings supporting piers and columns shall be in accordance with TABLE R403.2.

(b) Change TABLE R403.1 as follows:

(1) In the title add a reference to footnote "b" after the reference to footnote "a".

(2) Add footnote "b" to read as follows: [b]A basement shall not be considered a story for the purpose of this table.

(Fire Prevention and Building Safety Commission; 675 IAC 14-4.3-55; filed Jun 13, 2005, 3:00 p.m.: 28 IR 3270, eff 90 days after filing with the Secretary of State; readopted filed Aug 4, 2011, 8:35 a.m.: 20110831-IR-675110254RFA)

675 IAC 14-4.3-56 Section R403.1.2; continuous footings in seismic design categories D_1 and D_2

Authority: IC 22-13-2-2; IC 22-13-2-13
Affected: IC 22-12; IC 22-13; IC 22-14; IC 22-15; IC 36-7

Sec. 56. Delete SECTION R403.1.2. *(Fire Prevention and Building Safety Commission; 675 IAC 14-4.3-56; filed Jun 13, 2005, 3:00 p.m.: 28 IR 3271, eff 90 days after filing with the Secretary of State; readopted filed Aug 4, 2011, 8:35 a.m.: 20110831-IR-675110254RFA)*

675 IAC 14-4.3-57 Section R403.1.3; seismic reinforcing

Authority: IC 22-13-2-2; IC 22-13-2-13
Affected: IC 22-12; IC 22-13; IC 22-14; IC 22-15; IC 36-7

Sec. 57. (a) Delete the title and text of SECTION R403.1.3 and substitute to read as follows: Footings in Seismic Design Category C_1. In Seismic Design Category C_1, as a minimum requirement, 2 #4 bars shall be placed longitudinally in the bottom of the exterior footings.

(b) Add a sentence at the end of SECTION R403.1.3 to read as follows: The required bars shall be placed in the bottom half of the footing, at least 6 inches (152.4 mm) apart and not less than 3 inches (76.2 mm) from the bottom and the sides of the footing.

(Fire Prevention and Building Safety Commission; 675 IAC 14-4.3-57; filed Jun 13, 2005, 3:00 p.m.: 28 IR 3271, eff 90 days after filing with the Secretary of State; readopted filed Aug 4, 2011, 8:35 a.m.: 20110831-IR-675110254RFA)

675 IAC 14-4.3-58 Section R403.1.3.1; foundations with stemwalls

Authority: IC 22-13-2-2; IC 22-13-2-13
Affected: IC 22-12; IC 22-13; IC 22-14; IC 22-15; IC 36-7

Sec. 58. Delete SECTION R403.1.3.1. *(Fire Prevention and Building Safety Commission; 675 IAC 14-4.3-58; filed Jun 13, 2005, 3:00 p.m.: 28 IR 3271, eff 90 days after filing with the Secretary of State; readopted filed Aug 4, 2011, 8:35 a.m.: 20110831-IR-675110254RFA)*

675 IAC 14-4.3-59 Section R403.1.3.2; slabs-on-ground with turned-down footings

Authority: IC 22-13-2-2; IC 22-13-2-13
Affected: IC 22-12; IC 22-13; IC 22-14; IC 22-15; IC 36-7

Sec. 59. Delete SECTION R403.1.3.2. *(Fire Prevention and Building Safety Commission; 675 IAC 14-4.3-59; filed Jun 13, 2005, 3:00 p.m.: 28 IR 3271, eff 90 days after filing with the Secretary of State; readopted filed Aug 4, 2011, 8:35 a.m.: 20110831-IR-675110254RFA)*

675 IAC 14-4.3-60 Section R403.1.4.2; seismic conditions

Authority: IC 22-13-2-2; IC 22-13-2-13
Affected: IC 22-12; IC 22-13; IC 22-14; IC 22-15; IC 36-7

Sec. 60. Change the text of SECTION R403.1.4.2 to read as follows: In Seismic Design Category C_1, interior footings cast monolithically with a slab on grade shall extend to a depth of not less than 8 inches below the top of the slab or to the undisturbed ground or engineered fill, whichever is greater. *(Fire Prevention and Building Safety Commission; 675 IAC 14-4.3-60; filed Jun 13, 2005, 3:00 p.m.: 28 IR 3271, eff 90 days after filing with the Secretary of State; readopted filed Aug 4, 2011, 8:35 a.m.: 20110831-IR-675110254RFA)*

675 IAC 14-4.3-61 Section R403.1.4.1; frost protection

Authority: IC 22-13-2-2; IC 22-13-2-13
Affected: IC 22-12; IC 22-13; IC 22-14; IC 22-15; IC 36-7

Sec. 61. Delete the text of Exception 1 to SECTION 403.1.4.1 and substitute to read as follows: Detached garages, detached carports, or accessory structures built to the requirements of Table 309. *(Fire Prevention and Building Safety Commission; 675 IAC 14-4.3-61; filed Jun 13, 2005, 3:00 p.m.: 28 IR 3271, eff 90 days after filing with the Secretary of State; readopted filed Aug 4, 2011, 8:35 a.m.: 20110831-IR-675110254RFA)*

675 IAC 14-4.3-62 Section R403.1.6; foundation anchorage

Authority: IC 22-13-2-2; IC 22-13-2-13
Affected: IC 22-12; IC 22-13; IC 22-14; IC 22-15; IC 36-7

Sec. 62. Delete the first paragraph of Section R403.1.6 and the first six (6) sentences of the second paragraph and substitute to read as follows:

Sill plates and wall-panel sole plates supported directly on concrete or masonry foundations shall be anchored to the foundation in accordance with this section.

Exterior wall wood sole and sill plates supported directly on masonry or concrete foundations shall be anchored to the foundation with bolts spaced a maximum of 6 feet on center. There shall be a minimum of two bolts for each plate section with one bolt located not more than 12 inches (305 mm) or less than seven bolt diameters from each end of the plate section. Sill plates supporting floor systems, on walls having less than 7 feet (2,135 mm) of unbalanced fill, shall be anchored to the foundation with bolts spaced not more than 12 inches (305 mm) from corners and a maximum of 6 feet (1,828 mm) on center. Sill plates supporting floor systems, on walls having 7 feet (2,135 mm) or more of unbalanced fill, shall be anchored to the foundation with bolts spaced not more than 12 inches (305 mm) from corners and a maximum of 4 feet (1,219 mm) on center. Bolts shall be at least 1/2 inch in diameter and shall extend a minimum 7 inches (178 mm) into masonry or concrete and shall have at least 1 1/2 inches of grout or concrete surrounding the bolt shaft. Interior bearing wall sole plates on concrete slab foundations shall be positively anchored with approved fasteners. A washer, sized to cover the hole in the plate, shall be installed on each bolt and a nut shall be used to tighten the washer to the plate. *(Fire Prevention and Building Safety Commission; 675 IAC 14-4.3-62; filed Jun 13, 2005, 3:00 p.m.: 28 IR 3271, eff 90 days after filing with the Secretary of State; filed Mar 6, 2008, 11:13 a.m.: 20080402-IR-675070483FRA; readopted filed Aug 4, 2011, 8:35 a.m.: 20110831-IR-675110254RFA)*

675 IAC 14-4.3-63 Section R403.1.7.3; foundation elevation

Authority: IC 22-13-2-2; IC 22-13-2-13
Affected: IC 22-12; IC 22-13; IC 22-14; IC 22-15; IC 36-7

Sec. 63. Delete SECTION R403.1.7.3. *(Fire Prevention and Building Safety Commission; 675 IAC 14-4.3-63; filed Jun 13, 2005, 3:00 p.m.: 28 IR 3271, eff 90 days after filing with the Secretary of State; readopted filed Aug 4, 2011, 8:35 a.m.: 20110831-IR-675110254RFA)*

675 IAC 14-4.3-64 Section R403.1.7.4; alternate setback and clearances

Authority: IC 22-13-2-2; IC 22-13-2-13
Affected: IC 22-12; IC 22-13; IC 22-14; IC 22-15; IC 36-7

Sec. 64. Delete the second sentence of SECTION R403.1.7.4. *(Fire Prevention and Building Safety Commission; 675 IAC 14-4.3-64; filed Jun 13, 2005, 3:00 p.m.: 28 IR 3271, eff 90 days after filing with the Secretary of State; readopted filed Aug 4, 2011, 8:35 a.m.: 20110831-IR-675110254RFA)*

675 IAC 14-4.3-65 Section R403.1.8; foundations on expansive soils

Authority: IC 22-13-2-2; IC 22-13-2-13
Affected: IC 22-12; IC 22-13; IC 22-14; IC 22-15; IC 36-7

Sec. 65. Change SECTION R403.1.8 to read as follows: Foundation and floor slabs for buildings located on expansive soils shall be designed in accordance with the Indiana Building Code (675 IAC 13). *(Fire Prevention and Building Safety Commission; 675 IAC 14-4.3-65; filed Jun 13, 2005, 3:00 p.m.: 28 IR 3271, eff 90 days after filing with the Secretary of State; readopted filed Aug 4, 2011, 8:35 a.m.: 20110831-IR-675110254RFA)*

675 IAC 14-4.3-66 Table R403.2; size of footings supporting piers and columns

Authority: IC 22-13-2-2; IC 22-13-2-13
Affected: IC 22-12; IC 22-13; IC 22-14; IC 22-15; IC 36-7

Sec. 66. Add TABLE R403.2 to read as follows:

TABLE R403.2
SIZE OF FOOTINGS SUPPORTING PIERS AND COLUMNS

Spacing of Girder "S"[1]	Type of Loading[2]			Column Size Required[3]		Size of Plain Concrete Footing Required[3]
	A	B	C	Steel	Wood	
10'	5'–6"	–	–	3" Steel Pipe[4]	4" × 4"	2' × 2' × 8" [5]
15'	4'–0"	–	–			
20'	–	–	–			
10'	8'–6"	5'–0"	–			
15'	6'–0"	4'–0"	–			
20'	4'–6"	–	–			
10'	12'–0"	9'–0"	8'–0"		6" × 6"	4' × 4' × 16" [5]
15'	10'–0"	8'–0"	7'–0"			
20'	8'–0"	7'–0"	6'–0"			
10'	16'–0"	12'–6"	11'–0"		8" × 8"	4'3" × 4'3" × 17" [5]
15'	13'–6"	10'–6"	10'–0"			
20'	12'–0"	9'–6"	8'–0"			
10'	20'–0"	16'–0"	13'–6"			
15'	17'–0"	13'–6"	11'–6"			
20'	15'–0"	12'–0"	10'–0"			

[1]The spacing "S" is the tributary load in the girder. It is found by adding the unsupported spans of the floor joists on each side that are supported by the girder and dividing by 2.

[2]Figures under type of loading columns are the allowable girder span.

Type A loading is for a girder supporting 1 floor and a roof.

Type B loading is for a girder supporting 2 floors and a roof.

Type C loading is for a girder supporting 3 floors and a roof.

[3]Required size of column is based on girder support from 2 sides. Size of footing is based on allowable soil pressure of 2,000 pounds per square foot.

[4]Schedule 40.

[5]Footing thickness is based on the use of plain concrete with an ultimate compressive strength of not less than 2,000 pounds per square inch at 28 days. If approved, the footing thickness may be reduced based on an engineered design utilizing higher strength concrete and/or reinforcement.

(Fire Prevention and Building Safety Commission; 675 IAC 14-4.3-66; filed Jun 13, 2005, 3:00 p.m.: 28 IR 3272, eff 90 days after filing with the Secretary of State; filed Mar 6, 2008, 11:13 a.m.: 20080402-IR-675070483FRA; readopted filed Aug 4, 2011, 8:35 a.m.: 20110831-IR-675110254RFA)

675 IAC 14-4.3-67 Section R403.3.4; termite damage

Authority: IC 22-13-2-2; IC 22-13-2-13
Affected: IC 22-12; IC 22-13; IC 22-14; IC 22-15; IC 36-7

Sec. 67. Delete SECTION R403.3.4. *(Fire Prevention and Building Safety Commission; 675 IAC 14-4.3-67; filed Jun 13, 2005, 3:00 p.m.: 28 IR 3272, eff 90 days after filing with the Secretary of State; readopted filed Aug 4, 2011, 8:35 a.m.: 20110831-IR-675110254RFA)*

675 IAC 14-4.3-68 Section R404.1; concrete and masonry foundation walls

Authority: IC 22-13-2-2; IC 22-13-2-13
Affected: IC 22-12; IC 22-13; IC 22-14; IC 22-15; IC 36-7

Sec. 68. (a) In the first sentence of Section R404.1, add "ACI 332" after "ACI 318" and before "NCMA TR68-A".

(b) Delete the last sentence of Section R404.1. *(Fire Prevention and Building Safety Commission; 675 IAC 14-4.3-68; filed Jun 13, 2005, 3:00 p.m.: 28 IR 3272, eff 90 days after filing with the Secretary of State; filed Mar 6, 2008, 11:13 a.m.: 20080402-IR-675070483FRA; readopted filed Aug 4, 2011, 8:35 a.m.: 20110831-IR-675110254RFA)*

675 IAC 14-4.3-69 Section R404.1.1; masonry foundation walls

Authority: IC 22-13-2-2; IC 22-13-2-13
Affected: IC 22-12; IC 22-13; IC 22-14; IC 22-15; IC 36-7

Sec. 69. Delete SECTION R404.1.1 and substitute to read as follows: Concrete masonry and clay foundation walls shall be constructed as set forth in TABLES R404.1.1(1), R404.1.1(2), R404.1.1(3), and R404.1.1(4) and shall comply with the provisions of this section and the applicable provisions of SECTIONS R606.1 through R606.10, R607, R608, R609, and R610. Rubble masonry foundation walls shall be constructed in accordance with SECTIONS R404.1.8 and R606.2.2.

EXCEPTION: In Seismic Design Category C_1, TABLE R404.1.1(1) may be used only when the unbalanced fill is 4 feet (1,219 mm) or less. Rubble stone masonry walls shall not be used in Seismic Design Category C_1.

(Fire Prevention and Building Safety Commission; 675 IAC 14-4.3-69; filed Jun 13, 2005, 3:00 p.m.: 28 IR 3272, eff 90 days after filing with the Secretary of State; readopted filed Aug 4, 2011, 8:35 a.m.: 20110831-IR-675110254RFA)

675 IAC 14-4.3-70 Section R404.1.2; concrete foundation walls

Authority: IC 22-13-2-2; IC 22-13-2-13
Affected: IC 22-12; IC 22-13; IC 22-14; IC 22-15; IC 36-7

Sec. 70. Delete SECTION R404.1.2 and substitute to read as follows: Concrete foundation walls shall be constructed as set forth in TABLES R404.1.1(1), R404.1.1(2), R404.1.1(3), and R404.1.1(4) and shall also comply with the provisions of this section and the applicable provisions of SECTION R402.2. In Seismic Design Category C_1, TABLE R404.1.1(1) may be used only when the height of the unbalanced fill is 4 feet (1,219 mm) or less. *(Fire Prevention and Building Safety Commission; 675 IAC 14-4.3-*

70; filed Jun 13, 2005, 3:00 p.m.: 28 IR 3273, eff 90 days after filing with the Secretary of State; readopted filed Aug 4, 2011, 8:35 a.m.: 20110831-IR-675110254RFA)

675 IAC 14-4.3-71 Section R404.1.5; foundation wall thickness based on walls supported

Authority: IC 22-13-2-2; IC 22-13-2-13
Affected: IC 22-12; IC 22-13; IC 22-14; IC 22-15; IC 36-7

Sec. 71. Delete the text of Section R404.1.5 and substitute to read as follows: Concrete and masonry foundation walls shall not be less than the thickness of the wall supported.

Exceptions: Foundation walls of at least 8 inches nominal thickness shall be permitted:

1. Under frame walls, with brick or masonry veneer, that are wider than the foundation as permitted in paragraph R606.3, or stud walls that are wider than required by Table R602.3.1 and are supported by a floor system.
2. Under 10 inch wide, multiple wythe masonry cavity walls, where the total height of the walls supported, including gables, is not more than 20 feet, provided the requirements of Sections R404.1.1 and R404.1.2 are met.

(Fire Prevention and Building Safety Commission; 675 IAC 14-4.3-71; filed Jun 13, 2005, 3:00 p.m.: 28 IR 3273, eff 90 days after filing with the Secretary of State; filed Mar 6, 2008, 11:13 a.m.: 20080402-IR-675070483FRA; readopted filed Aug 4, 2011, 8:35 a.m.: 20110831-IR-675110254RFA)

675 IAC 14-4.3-72 Section R404.1.5.1; pier and curtain wall foundations

Authority: IC 22-13-2-2; IC 22-13-2-13
Affected: IC 22-12; IC 22-13; IC 22-14; IC 22-15; IC 36-7

Sec. 72. Change, in Item 5 of SECTION R404.1.5.1, "accepted" to "approved". *(Fire Prevention and Building Safety Commission; 675 IAC 14-4.3-72; filed Jun 13, 2005, 3:00 p.m.: 28 IR 3273, eff 90 days after filing with the Secretary of State; readopted filed Aug 4, 2011, 8:35 a.m.: 20110831-IR-675110254RFA)*

675 IAC 14-4.3-73 Section R404.1.6; height above finished grade

Authority: IC 22-13-2-2; IC 22-13-2-13
Affected: IC 22-12; IC 22-13; IC 22-14; IC 22-15; IC 36-7

Sec. 73. Delete the text of SECTION R404.1.6 and substitute to read as follows: Concrete and masonry foundation walls shall extend above the finished grade adjacent to the foundation at all points a minimum of 6 inches (152 mm). *(Fire Prevention and Building Safety Commission; 675 IAC 14-4.3-73; filed Jun 13, 2005, 3:00 p.m.: 28 IR 3273, eff 90 days after filing with the Secretary of State; readopted filed Aug 4, 2011, 8:35 a.m.: 20110831-IR-675110254RFA)*

675 IAC 14-4.3-74 Section R404.2.1; identification

Authority: IC 22-13-2-2; IC 22-13-2-13
Affected: IC 22-12; IC 22-13; IC 22-14; IC 22-15; IC 36-7

Sec. 74. Delete the second and third sentences of SECTION R404.2.1. *(Fire Prevention and Building Safety Commission; 675 IAC 14-4.3-74; filed Jun 13, 2005, 3:00 p.m.: 28 IR 3273, eff 90 days after filing with the Secretary of State; readopted filed Aug 4, 2011, 8:35 a.m.: 20110831-IR-675110254RFA)*

675 IAC 14-4.3-75 Section R404.4; insulating concrete form foundation walls

Authority: IC 22-13-2-2; IC 22-13-2-13
Affected: IC 22-12; IC 22-13; IC 22-14; IC 22-15; IC 36-7

Sec. 75. Delete the last sentence of SECTION R404.4. *(Fire Prevention and Building Safety Commission; 675 IAC 14-4.3-75; filed Jun 13, 2005, 3:00 p.m.: 28 IR 3273, eff 90 days after filing with the Secretary of State; readopted filed Aug 4, 2011, 8:35*

a.m.: 20110831-IR-675110254RFA)

675 IAC 14-4.3-76 Section R404.4.7.2; termite hazards

Authority: IC 22-13-2-2; IC 22-13-2-13
Affected: IC 22-12; IC 22-13; IC 22-14; IC 22-15; IC 36-7

Sec. 76. Delete SECTION R404.4.7.2. *(Fire Prevention and Building Safety Commission; 675 IAC 14-4.3-76; filed Jun 13, 2005, 3:00 p.m.: 28 IR 3273, eff 90 days after filing with the Secretary of State; readopted filed Aug 4, 2011, 8:35 a.m.: 20110831-IR-675110254RFA)*

675 IAC 14-4.3-77 Section R405.2.3; drainage system

Authority: IC 22-13-2-2; IC 22-13-2-13
Affected: IC 22-12; IC 22-13; IC 22-14; IC 22-15; IC 36-7

Sec. 77. Change SECTION R405.2.3 to read as follows: In other than Group I soils, a sump pit shall be provided to drain the porous layer and footings. The sump pit shall be a minimum of 18 inches (457 mm) in diameter or equivalent and a minimum of 24 inches (610 mm) below the bottom of the basement floor. Where a porous layer of gravel, crushed stone, or coarse sand is used between the soil and the concrete floor slab, openings shall be made in the sump pit to allow drainage of that layer. The sump pit shall be capable of positive gravity or mechanical drainage to remove any accumulated water.

EXCEPTION: When a gravity drain system is used a sump pit is not required.

(Fire Prevention and Building Safety Commission; 675 IAC 14-4.3-77; filed Jun 13, 2005, 3:00 p.m.: 28 IR 3273, eff 90 days after filing with the Secretary of State; readopted filed Aug 4, 2011, 8:35 a.m.: 20110831-IR-675110254RFA)

675 IAC 14-4.3-78 Section R407.3; structural requirement

Authority: IC 22-13-2-2; IC 22-13-2-13
Affected: IC 22-12; IC 22-13; IC 22-14; IC 22-15; IC 36-7

Sec. 78. At the end of the first sentence of Section R407.3, add "and attached at the top to the structural framing". *(Fire Prevention and Building Safety Commission; 675 IAC 14-4.3-78; filed Jun 13, 2005, 3:00 p.m.: 28 IR 3274, eff 90 days after filing with the Secretary of State; filed Mar 6, 2008, 11:13 a.m.: 20080402-IR-675070483FRA; readopted filed Aug 4, 2011, 8:35 a.m.: 20110831-IR-675110254RFA)*

675 IAC 14-4.3-78.5 Section R408.1; ventilation

Authority: IC 22-13-2-2; IC 22-13-2-13
Affected: IC 22-12; IC 22-13; IC 22-14; IC 22-15; IC 36-7

Sec. 78.5. (a) Add a sentence to Section R408.1, after the first sentence, to read as follows: The ventilation openings may be located in the rim joist of the exterior wall.

(b) Change the last sentence of Section R408.1 to read as follows: One such ventilation opening shall be within 4 feet (1,219 mm) of each corner of said building. *(Fire Prevention and Building Safety Commission; 675 IAC 14-4.3-78.5; filed Mar 6, 2008, 11:13 a.m.: 20080402-IR-675070483FRA; filed Mar 4, 2009, 1:57 p.m.: 20090401-IR-675080604FRA; readopted filed Aug 4, 2011, 8:35 a.m.: 20110831-IR-675110254RFA)*

675 IAC 14-4.3-79 Section R408.2; openings for under-floor ventilation

Authority: IC 22-13-2-2; IC 22-13-2-13
Affected: IC 22-12; IC 22-13; IC 22-14; IC 22-15; IC 36-7

Sec. 79. Make the following changes to Section R408.2:

(1) Delete the first two (2) sentences of R408.2 without substitution.

(2) Change Exception 1 to read as follows: Ventilation openings to the outdoors are not required if ventilation openings to the interior are provided.
(3) Amend Exception 5 as follows: Delete "Section N1102.1.7" and substitute "Chapter 11 of this code".
(4) Add Exception 6 to read as follows: 6. Ventilation openings are not required when the under-floor space is insulated in accordance with Chapter 11 of this code, the insulation materials comply with Sections R314 and R316 of this code and the ground surface is covered with an approved vapor retarder that extends to the exterior walls and all penetrations. The vapor retarder shall have a minimum thickness of 0.006 inch and shall be installed so that any joints are lapped at least 6 inches (152 mm). Mechanical ductwork shall be uninsulated and shall have no openings into the under-floor space. A hard surface pad with dimensions of at least 16 inches (407 mm) by 16 inches (407 mm), and an electrical receptacle shall be installed to allow for the installation of dehumidification equipment in the event of high humidity conditions in the under-floor spaces. Openings into conditioned space shall be permitted.
(5) Add Exception 7 to read as follows: 7. Ventilation openings are not required when the under-floor space is insulated in accordance with Chapter 11 of this code, the insulation materials comply with Sections R314 and R316 of this code and there is a concrete floor at least 2 inches (51 mm) thick installed on the ground surface of the under-floor space. A vapor retarder, at least 0.006 inch (.152 mm) thick and extending to the exterior walls and penetrations, shall be installed under the concrete floor. Conditioned air shall be circulated through the under-floor space at a rate of at least 1 cfm (10 m^2) for each 50 square feet (1.02 L/s) of under-floor space.

(Fire Prevention and Building Safety Commission; 675 IAC 14-4.3-79; filed Jun 13, 2005, 3:00 p.m.: 28 IR 3274, eff 90 days after filing with the Secretary of State; filed Mar 6, 2008, 11:13 a.m.: 20080402-IR-675070483FRA; readopted filed Aug 4, 2011, 8:35 a.m.: 20110831-IR-675110254RFA)

675 IAC 14-4.3-80 Section R408.3; access

Authority: IC 22-13-2-2; IC 22-13-2-13
Affected: IC 22-12; IC 22-13; IC 22-14; IC 22-15; IC 36-7

Sec. 80. Change Section R408.3 to read as follows: An access opening 24 inches by 18 inches (610 mm by 457 mm) shall be provided to the under-floor space. When the under-floor space access opening is through a wall, the opening shall be a minimum of 24 inches (609 mm) wide by 16 inches (406 mm) high with an areaway provided for access to the under-floor opening. The areaway shall be not less than 24 inches (609 mm) long parallel to the wall at the access opening by 16 inches (406 mm) wide perpendicular to the wall at the center of the access opening. The bottom of the areaway shall be below the threshold of the access opening. The under-floor access opening shall not be under a door.

Exception: Access may be placed under a doorway provided the step or steps that cover the opening to the crawlspace are attached to the structure at the top with a fixed pin-type hinge, so that, when the step or steps are in the raised position, passage by way of the doorway is restricted.

(Fire Prevention and Building Safety Commission; 675 IAC 14-4.3-80; filed Jun 13, 2005, 3:00 p.m.: 28 IR 3274, eff 90 days after filing with the Secretary of State; filed Mar 6, 2008, 11:13 a.m.: 20080402-IR-675070483FRA; readopted filed Aug 4, 2011, 8:35 a.m.: 20110831-IR-675110254RFA)

675 IAC 14-4.3-81 Section R408.6; flood resistance

Authority: IC 22-13-2-2; IC 22-13-2-13
Affected: IC 22-12; IC 22-13; IC 22-14; IC 22-15; IC 36-7

Sec. 81. Delete the title and text of SECTION R408.6 and substitute to read as follows: Underfloor drainage. In other than Group I soils, underfloor spaces shall be drained to prevent water accumulation by one of the following methods:

1. The underfloor space shall be graded at a slope of not less than 1 inch (25 mm) for each 10 feet (3,048 mm) to a gravity discharge or a sump pit having a minimum size of 18 inches (457 mm) in diameter by 24 inches (610 mm) deep installed below the lowest point of the slope so that, in the event of excess water accumulation, a sump pump can be readily installed.
2. The underfloor space shall be graded at a slope of not less than ½ inch (13 mm) for each 10 feet (3,048 mm) to a gravity discharge or a sump pit having a minimum size of 18 inches (457 mm) in diameter by 24 inches (610 mm) deep installed

below the lowest point of the slope and not less than 3 inches (76 mm) of granular material shall be placed between the ground surface and the vapor retarder so that, in the event of excess water accumulation, a sump pump can be readily installed.

(Fire Prevention and Building Safety Commission; 675 IAC 14-4.3-81; filed Jun 13, 2005, 3:00 p.m.: 28 IR 3274, eff 90 days after filing with the Secretary of State; readopted filed Aug 4, 2011, 8:35 a.m.: 20110831-IR-675110254RFA)

675 IAC 14-4.3-82 Section R502.1; identification

Authority: IC 22-13-2-2; IC 22-13-2-13
Affected: IC 22-12; IC 22-13; IC 22-14; IC 22-15; IC 36-7

Sec. 82. Delete the last sentence of SECTION R502.1. *(Fire Prevention and Building Safety Commission; 675 IAC 14-4.3-82; filed Jun 13, 2005, 3:00 p.m.: 28 IR 3274, eff 90 days after filing with the Secretary of State; readopted filed Aug 4, 2011, 8:35 a.m.: 20110831-IR-675110254RFA)*

675 IAC 14-4.3-83 Section R502.2.1; decks

Authority: IC 22-13-2-2; IC 22-13-2-13
Affected: IC 22-12; IC 22-13; IC 22-14; IC 22-15; IC 36-7

Sec. 83. Change SECTION R502.2.1 as follows: (a) Change the second sentence to read "Such attachment shall be made with bolts or lag screws, according to Table R502.2.1.".

(b) In the third sentence, delete "verified during construction" and substitute "achieved". *(Fire Prevention and Building Safety Commission; 675 IAC 14-4.3-83; filed Jun 13, 2005, 3:00 p.m.: 28 IR 3274, eff 90 days after filing with the Secretary of State; readopted filed Aug 4, 2011, 8:35 a.m.: 20110831-IR-675110254RFA)*

675 IAC 14-4.3-84 Table R502.2.1; MAXIMUM SPACING OF FASTENERS FOR LEDGERS SUPPORTING DECKS

Authority: IC 22-13-2-2; IC 22-13-2-13
Affected: IC 22-12; IC 22-13; IC 22-14; IC 22-15; IC 36-7

Sec. 84. Add TABLE R502.2.1 as follows:

TABLE R502.2.1
SPACING OF FASTENERS FOR LEDGERS
SUPPORTING DECKS
MAXIMUM FASTENER SPACING IN INCHES[a, c, f, g]

JOIST SPAN	6′	8′	10′	12′	14′	16′	18′
Lag Screws[b, d, e]	30	23	18	15	13	11	10
Bolts[b, e]	36	36	34	29	24	21	19

[a]Bolts or lag screws shall be a minimum of ½ inch in diameter.

[b]Assumes connection directly to 1½ inch thick solid wood or 1 c inch thick composite wood band joist or through maximum ½ inch thick wood sheathing to band joist.

[c]Flash ledger in accordance with SECTION R703.8(5).

[d]Lag screws shall fully penetrate the band joist and be staggered to prevent splitting.

[e]Washers shall be installed under lag screw heads, bolt heads, and nuts. Carriage bolts shall have a washer under the nut.

[f]Ledgers shall be anchored to the band joist with a minimum of two fasteners per ledger section with one fastener located not more than 12 inches (30.5 cm) or less than seven bolt diameters from the end of each ledger section.

[g]With a minimum 1 c inch (28.6 mm) composite wood band joist, bolts shall be used; lag screws shall not be used.

(Fire Prevention and Building Safety Commission; 675 IAC 14-4.3-84; filed Jun 13, 2005, 3:00 p.m.: 28 IR 3274, eff 90 days after filing with the Secretary of State; readopted filed Aug 4, 2011, 8:35 a.m.: 20110831-IR-675110254RFA)

675 IAC 14-4.3-85 Figure R502.2; floor construction

Authority: IC 22-13-2-2; IC 22-13-2-13
Affected: IC 22-12; IC 22-13; IC 22-14; IC 22-15; IC 36-7

Sec. 85. Add a note to the joist between the fireplace and the center girder to read as follows: TAIL JOIST - SEE SECTION R502.10. *(Fire Prevention and Building Safety Commission; 675 IAC 14-4.3-85; filed Jun 13, 2005, 3:00 p.m.: 28 IR 3275, eff 90 days after filing with the Secretary of State; readopted filed Aug 4, 2011, 8:35 a.m.: 20110831-IR-675110254RFA)*

675 IAC 14-4.3-86 Table R502.3.3(2); cantilever spans for floor joists supporting exterior balcony

Authority: IC 22-13-2-2; IC 22-13-2-13
Affected: IC 22-12; IC 22-13; IC 22-14; IC 22-15; IC 36-7

Sec. 86. (a) Add a reference to footnotes "g" and "h" in the title of TABLE R502.3.3(2).

(b) Add footnote "g" to read as follows: [g]In addition to snow loads shown, the table includes 60 psf of live load.

(c) Add footnote "h" to read as follows: [h]Use of the table shall be permitted for the construction of interior balconies not supporting roof loads. *(Fire Prevention and Building Safety Commission; 675 IAC 14-4.3-86; filed Jun 13, 2005, 3:00 p.m.: 28 IR 3275, eff 90 days after filing with the Secretary of State; readopted filed Aug 4, 2011, 8:35 a.m.: 20110831-IR-675110254RFA)*

675 IAC 14-4.3-86.5 Table R502.5(1); girder spans and header spans for exterior bearing walls

Authority: IC 22-13-2-2; IC 22-13-2-13
Affected: IC 22-12; IC 22-13; IC 22-14; IC 22-15; IC 36-7

Sec. 86.5. Delete Table R502.5(1) and substitute to read as follows:

TABLE R502.5(1)

GIRDER SPANS[a] AND HEADER SPANS[a] FOR EXTERIOR BEARING WALLS

(Maximum spans for Douglas fir-larch, hem-fir, southern pine and spruce-pine-fir[b] and regulated number of jack studs)

Girders and Headers Supporting	Size	Ground Snow Load (psf) [e]																	
		30						50						70					
		Building width [c] (feet)																	
		20		28		36		20		28		36		20		28		36	
		Span	NJ[d]	Span	NJ[d]	Span	NJ[d]	Span	NJ[d]	Span	NJ[d]	Span	NJ[d]	Span	NJ[d]	Span	NJ[d]	Span	NJ[d]
Roof and Ceiling	2-2×4	3-6	1	3-2	1	2-10	1	3-2	1	2-9	1	2-6	1	2-10	1	2-6	1	2-3	1
	2-2×6	5-5	1	4-8	1	4-2	1	4-8	1	4-1	1	3-8	2	4-2	1	3-8	2	3-3	2
	2-2×8	6-10	1	5-11	2	5-4	2	5-11	2	5-2	2	4-7	2	5-4	2	4-7	2	4-1	2
	2-2×10	8-5	2	7-3	2	6-6	2	7-3	2	6-3	2	5-7	2	6-6	2	5-7	2	5-0	2
	2-2×12	9-9	2	8-5	2	7-6	2	8-5	2	7-3	2	6-6	2	7-6	2	6-6	2	5-10	3
	3-2×8	8-4	1	7-5	1	6-8	1	7-5	1	6-5	2	5-9	2	6-8	1	5-9	2	5-2	2
	3-2×10	10-6	1	9-1	2	8-2	2	9-1	2	7-10	2	7-0	2	8-2	2	7-0	2	6-4	2
	3-2×12	12-2	2	10-7	2	9-5	2	10-7	2	9-2	2	8-2	2	9-5	2	8-2	2	7-4	2
	4-2×8	9-2	1	8-4	1	7-8	1	8-4	1	7-5	1	6-8	1	7-8	1	6-8	1	5-11	2
	4-2×10	11-8	1	10-6	1	9-5	2	10-6	1	9-1	2	8-2	2	9-5	2	8-2	2	7-3	2

	4-2×12	14-1	1	12-2	2	10-11	2	12-2	2	10-7	2	9-5	2	10-11	2	9-5	2	8-5	2
Roof, Ceiling, and One Center-Bearing Floor	2-2×4	3-1	1	2-9	1	2-5	1	2-9	1	2-5	1	2-2	1	2-7	1	2-3	1	2-0	1
	2-2×6	4-6	1	4-0	1	3-7	2	4-1	1	3-7	2	3-3	2	3-9	2	3-3	2	2-11	2
	2-2×8	5-9	2	5-0	2	4-6	2	5-2	2	4-6	2	4-1	2	4-9	2	4-2	2	3-9	2
	2-2×10	7-0	2	6-2	2	5-6	2	6-4	2	5-6	2	5-0	2	5-9	2	5-1	2	4-7	3
	2-2×12	8-1	2	7-1	2	6-5	2	7-4	2	6-5	2	5-9	3	6-8	2	5-10	3	5-3	3
	3-2×8	7-2	1	6-3	2	5-8	2	6-5	2	5-8	2	5-1	2	5-11	2	5-2	2	4-8	2
	3-2×10	8-9	2	7-8	2	6-11	2	7-11	2	6-11	2	6-3	2	7-3	2	6-4	2	5-8	2
	3-2×12	10-2	2	8-11	2	8-0	2	9-2	2	8-0	2	7-3	2	8-5	2	7-4	2	6-7	2
	4-2×8	8-1	1	7-3	1	6-7	1	7-5	1	6-6	1	5-11	2	6-10	1	6-0	2	5-5	2
	4-2×10	10-1	1	8-10	2	8-0	2	9-1	2	8-0	2	7-2	2	8-4	2	7-4	2	6-7	2
	4-2×12	11-9	2	10-3	2	9-3	2	10-7	2	9-3	2	8-4	2	9-8	2	8-6	2	7-7	2
Roof, Ceiling, and One Clear Span Floor	2-2×4	2-8	1	2-4	1	2-1	1	2-7	1	2-3	1	2-0	1	2-5	1	2-1	1	1-10	1
	2-2×6	3-11	1	3-5	2	3-0	2	3-10	2	3-4	2	3-0	2	3-6	2	3-1	2	2-9	2
	2-2×8	5-0	2	4-4	2	3-10	2	4-10	2	4-2	2	3-9	2	4-6	2	3-11	2	3-6	2
	2-2×10	6-1	2	5-3	2	4-8	2	5-11	2	5-1	2	4-7	3	5-6	2	4-9	2	4-3	3
	2-2×12	7-1	2	6-1	3	5-5	3	6-10	2	5-11	3	5-4	3	6-4	2	5-6	3	5-0	3
	3-2×8	6-3	2	5-5	2	4-10	2	6-1	2	5-3	2	4-8	2	5-7	2	4-11	2	4-5	2
	3-2×10	7-7	2	6-7	2	5-11	2	7-5	2	6-5	2	5-9	2	6-10	2	6-0	2	5-4	2
	3-2×12	8-10	2	7-8	2	6-10	2	8-7	2	7-5	2	6-8	2	7-11	2	6-11	2	6-3	2
	4-2×8	7-2	1	6-3	2	5-7	2	7-0	1	6-1	2	5-5	2	6-6	1	5-8	2	5-1	2
	4-2×10	8-9	2	7-7	2	6-10	2	8-7	2	7-5	2	6-7	2	7-11	2	6-11	2	6-2	2
	4-2×12	10-2	2	8-10	2	7-11	2	9-11	2	8-7	2	7-8	2	9-2	2	8-0	2	7-2	2
Roof, Ceiling, and Two Center-Bearing Floors	2-2×4	2-7	1	2-3	1	2-0	1	2-6	1	2-2	1	1-11	1	2-4	1	2-0	1	1-9	1
	2-2×6	3-9	2	3-3	2	2-11	2	3-8	2	3-2	2	2-10	2	3-5	2	3-0	2	2-8	2
	2-2×8	4-9	2	4-2	2	3-9	2	4-7	2	4-0	2	3-8	2	4-4	2	3-9	2	3-5	2
	2-2×10	5-9	2	5-1	2	4-7	3	5-8	2	4-11	2	4-5	3	5-3	2	4-7	3	4-2	3
	2-2×12	6-8	2	5-10	3	5-3	3	6-6	2	5-9	3	5-2	3	6-1	3	5-4	3	4-10	3
	3-2×8	5-11	2	5-2	2	4-8	2	5-9	2	5-1	2	4-7	2	5-5	2	4-9	2	4-3	2
	3-2×10	7-3	2	6-4	2	5-8	2	7-1	2	6-2	2	5-7	2	6-7	2	5-9	2	5-3	2

	3-2×12	8-5	2	7-4	2	6-7	2	8-2	2	7-2	2	6-5	3	7-8	2	6-9	2	6-1	3
	4-2×8	6-10	1	6-0	2	5-5	2	6-8	1	5-10	2	5-3	2	6-3	2	5-6	2	4-11	2
	4-2×10	8-4	2	7-4	2	6-7	2	8-2	2	7-2	2	6-5	2	7-7	2	6-8	2	6-0	2
	4-2×12	9-8	2	8-6	2	7-8	2	9-5	2	8-3	2	7-5	2	8-10	2	7-9	2	7-0	2
Roof, Ceiling, and Two Clear Span Floors	2-2×4	2-1	1	1-8	1	1-6	2	2-0	1	1-8	1	1-5	2	2-0	1	1-8	1	1-5	2
	2-2×6	3-1	2	2-8	2	2-4	2	3-0	2	2-7	2	2-3	2	2-11	2	2-7	2	2-3	2
	2-2×8	3-10	2	3-4	2	3-0	3	3-10	2	3-4	2	2-11	3	3-9	2	3-3	2	2-11	3
	2-2×10	4-9	2	4-1	3	3-8	3	4-8	2	4-0	3	3-7	3	4-7	3	4-0	3	3-6	3
	2-2×12	5-6	3	4-9	3	4-3	3	5-5	3	4-8	3	4-2	3	5-4	3	4-7	3	4-1	4
	3-2×8	4-10	2	4-2	2	3-9	2	4-9	2	4-1	2	3-8	2	4-8	2	4-1	2	3-8	2
	3-2×10	5-11	2	5-1	2	4-7	3	5-10	2	5-0	2	4-6	3	5-9	2	4-11	2	4-5	3
	3-2×12	6-10	2	5-11	3	5-4	3	6-9	2	5-10	3	5-3	3	6-8	2	5-9	3	5-2	3
	4-2×8	5-7	2	4-10	2	4-4	2	5-6	2	4-9	2	4-3	2	5-5	2	4-8	2	4-2	2
	4-2×10	6-10	2	5-11	2	5-3	2	6-9	2	5-10	2	5-2	2	6-7	2	5-9	2	5-1	2
	4-2×12	7-11	2	6-10	2	6-2	3	7-9	2	6-9	2	6-0	3	7-8	2	6-8	2	5-11	3

[a] Spans are given in feet and inches.

[b] Tabulated values assume #2 grade lumber.

[c] Building width is measured perpendicular to the ridge. For widths between those shown, spans are permitted to be interpolated.

[d] NJ-Number of jack studs required to support each end. Where the number of required jack studs equals one, the header is permitted to be supported by an approved framing anchor attached to the full-height wall stud and to the header.

[e] Use 30 psf ground snow load for cases in which ground snow load is less than 30 psf and the roof live load is equal to or less than 20 psf.

(Fire Prevention and Building Safety Commission; 675 IAC 14-4.3-86.5; filed Mar 6, 2008, 11:13 a.m.: 20080402-IR-675070483FRA; readopted filed Aug 4, 2011, 8:35 a.m.: 20110831-IR-675110254RFA)

675 IAC 14-4.3-87 Section R502.8.1; sawn lumber

Authority: IC 22-13-2-2; IC 22-13-2-13
Affected: IC 22-12; IC 22-13; IC 22-14; IC 22-15; IC 36-7

Sec. 87. Add an exception to SECTION R502.8.1 to read as follows: EXCEPTION: In 2 × 8 and larger solid lumber joists, holes up to 50 percent of the actual joist depth may be drilled at the center of the joist depth in the second and fifth sixths of the joist span. When the joist spans 90 percent or less of its maximum allowed span per TABLE R502.3.1(1) or R502.3.1(2), such holes may also be located in the center third of the joist span. Such hole shall be no closer than 6 inches (152 mm) from any other hole. Except for end notches, no notches may be in the same half of the span as a hole allowed by this exception. *(Fire Prevention and Building Safety Commission; 675 IAC 14-4.3-87; filed Jun 13, 2005, 3:00 p.m.: 28 IR 3275, eff 90 days after filing with the Secretary of State; readopted filed Aug 4, 2011, 8:35 a.m.: 20110831-IR-675110254RFA)*

675 IAC 14-4.3-88 Figure R502.8; cutting, notching, and drilling

Authority: IC 22-13-2-2; IC 22-13-2-13
Affected: IC 22-12; IC 22-13; IC 22-14; IC 22-15; IC 36-7

Sec. 88. Delete FIGURE R502.8 and substitute as follows: FIGURE R502.8:

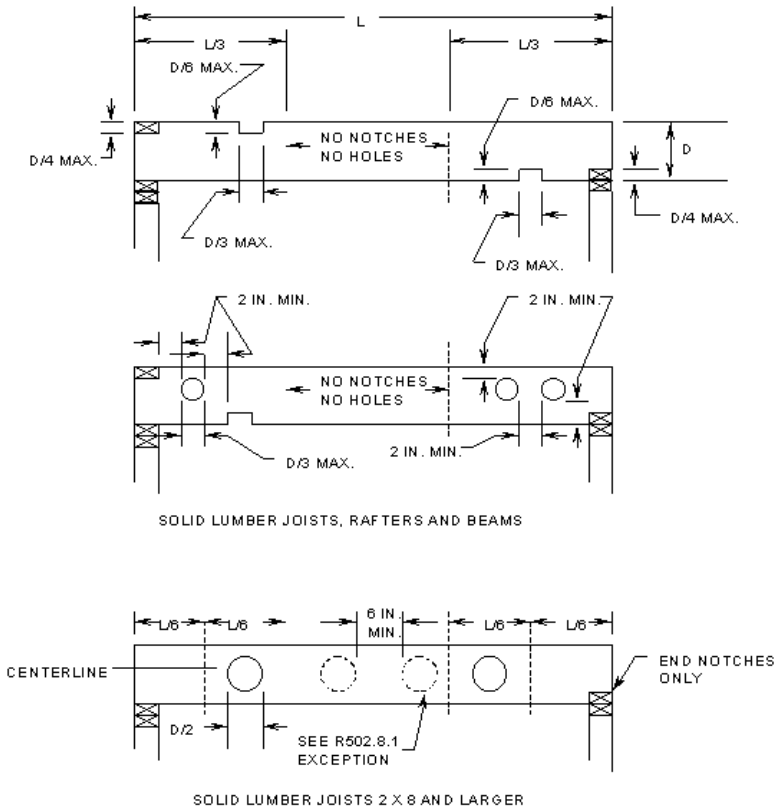

FIGURE R502.8
CUTTING, NOTCHING AND DRILLING

(Fire Prevention and Building Safety Commission; 675 IAC 14-4.3-88; filed Jun 13, 2005, 3:00 p.m.: 28 IR 3275, eff 90 days after filing with the Secretary of State; readopted filed Aug 4, 2011, 8:35 a.m.: 20110831-IR-675110254RFA)

675 IAC 14-4.3-89 Section R502.11.1; design

Authority: IC 22-13-2-2; IC 22-13-2-13
Affected: IC 22-12; IC 22-13; IC 22-14; IC 22-15; IC 36-7

Sec. 89. Delete the last sentence of SECTION R502.11.1. *(Fire Prevention and Building Safety Commission; 675 IAC 14-4.3-89; filed Jun 13, 2005, 3:00 p.m.: 28 IR 3276, eff 90 days after filing with the Secretary of State; readopted filed Aug 4, 2011, 8:35 a.m.: 20110831-IR-675110254RFA)*

675 IAC 14-4.3-89.5 Section R502.11.2; bracing

Authority: IC 22-13-2-2; IC 22-13-2-13
Affected: IC 22-12; IC 22-13; IC 22-14; IC 22-15; IC 36-7

Sec. 89.5. Change the last sentence of Section R502.11.2 to read as follows: In the absence of specific bracing requirements, trusses shall be braced in accordance with standard industry lateral restraint and diagonal bracing details. *(Fire Prevention and Building Safety Commission; 675 IAC 14-4.3-89.5; filed Mar 6, 2008, 11:13 a.m.: 20080402-IR-675070483FRA; readopted filed Aug 4, 2011, 8:35 a.m.: 20110831-IR-675110254RFA)*

675 IAC 14-4.3-90 Section R502.11.3; alterations to trusses

Authority: IC 22-13-2-2; IC 22-13-2-13
Affected: IC 22-12; IC 22-13; IC 22-14; IC 22-15; IC 25-4; IC 25-31; IC 36-7

Sec. 90. Change the first sentence of SECTION R502.11.3 to read as follows: Truss members and components shall not be cut, notched, spliced, or otherwise altered in any way without the acceptance of the change by an architect registered under IC 25-4 or a professional engineer registered under IC 25-31. *(Fire Prevention and Building Safety Commission; 675 IAC 14-4.3-90; filed Jun 13, 2005, 3:00 p.m.: 28 IR 3276, eff 90 days after filing with the Secretary of State; readopted filed Aug 4, 2011, 8:35 a.m.: 20110831-IR-675110254RFA)*

675 IAC 14-4.3-91 Section R502.11.4; truss design drawings

Authority: IC 22-13-2-2; IC 22-13-2-13
Affected: IC 22-12; IC 22-13; IC 22-14; IC 22-15; IC 36-7

Sec. 91. Delete SECTION R502.11.4 and substitute to read as follows: Truss design drawings shall be provided to the building official as required by the General Administrative Rules (675 IAC 12) for Class 1 structures or by local ordinance for Class 2 structures. *(Fire Prevention and Building Safety Commission; 675 IAC 14-4.3-91; filed Jun 13, 2005, 3:00 p.m.: 28 IR 3276, eff 90 days after filing with the Secretary of State; readopted filed Aug 4, 2011, 8:35 a.m.: 20110831-IR-675110254RFA)*

675 IAC 14-4.3-92 Section R602.1; identification

Authority: IC 22-13-2-2; IC 22-13-2-13
Affected: IC 22-12; IC 22-13; IC 22-14; IC 22-15; IC 36-7

Sec. 92. Delete the last sentence of SECTION R602.1. *(Fire Prevention and Building Safety Commission; 675 IAC 14-4.3-92; filed Jun 13, 2005, 3:00 p.m.: 28 IR 3276, eff 90 days after filing with the Secretary of State; readopted filed Aug 4, 2011, 8:35 a.m.: 20110831-IR-675110254RFA)*

675 IAC 14-4.3-93 Section R602.3; design and construction

Authority: IC 22-13-2-2; IC 22-13-2-13
Affected: IC 22-12; IC 22-13; IC 22-14; IC 22-15; IC 36-7

Sec. 93. In the third sentence of SECTION R602.3, delete "foam plastic sheathing" and substitute "nonstructural sheathing". *(Fire Prevention and Building Safety Commission; 675 IAC 14-4.3-93; filed Jun 13, 2005, 3:00 p.m.: 28 IR 3276, eff 90 days after filing with the Secretary of State; readopted filed Aug 4, 2011, 8:35 a.m.: 20110831-IR-675110254RFA)*

675 IAC 14-4.3-93.5 Section R602.3.2; top plate

Authority: IC 22-13-2-2; IC 22-13-2-13
Affected: IC 22-12; IC 22-13; IC 22-14; IC 22-15; IC 36-7

Sec. 93.5. Add a sentence in Section R602.3.2, as the third sentence, to read as follows: Joints in plates need not occur over studs. *(Fire Prevention and Building Safety Commission; 675 IAC 14-4.3-93.5; filed Mar 6, 2008, 11:13 a.m.: 20080402-IR-675070483FRA; readopted filed Aug 4, 2011, 8:35 a.m.: 20110831-IR-675110254RFA)*

675 IAC 14-4.3-94 Figure R602.3(1); typical wall, floor, and roof framing

Authority: IC 22-13-2-2; IC 22-13-2-13
Affected: IC 22-12; IC 22-13; IC 22-14; IC 22-15; IC 36-7

Sec. 94. Change the note in FIGURE R602.3(1) stating "FOR BLOCKING AND BRIDGING - SEE SECTION R502.5" to read "FOR BLOCKING AND BRIDGING-SEE SECTION R502.7". *(Fire Prevention and Building Safety Commission; 675 IAC 14-4.3-94; filed Jun 13, 2005, 3:00 p.m.: 28 IR 3276, eff 90 days after filing with the Secretary of State; readopted filed Aug 4, 2011, 8:35 a.m.: 20110831-IR-675110254RFA)*

675 IAC 14-4.3-94.5 Table R602.3.1; maximum allowable length of wood wall studs exposed to wind speeds of 100 mph or less in seismic design categories A, B, C, and D_1

Authority: IC 22-13-2-2; IC 22-13-2-13
Affected: IC 22-12; IC 22-13; IC 22-14; IC 22-15; IC 36-7

Sec. 94.5. Add a sentence to footnote b to read: In areas where snow load is 20 psf (.96 kN/m^2) or less and wind speed is 90 mph or less, f_b is to be not less than 1,310 psi and E not less than 1,400,000 psi. *(Fire Prevention and Building Safety Commission; 675 IAC 14-4.3-94.5; filed Mar 6, 2008, 11:13 a.m.: 20080402-IR-675070483FRA; readopted filed Aug 4, 2011, 8:35 a.m.: 20110831-IR-675110254RFA)*

675 IAC 14-4.3-94.6 Section R602.6.1; drilling and notching of top plate

Authority: IC 22-13-2-2; IC 22-13-2-13
Affected: IC 22-12; IC 22-13; IC 22-14; IC 22-15; IC 36-7

Sec. 94.6. Change Section R602.6.1 to read as follows: When piping or ductwork is placed in or partly in an exterior wall or interior load-bearing wall, necessitating cutting, drilling, or notching of the top plate by more than 50 percent of its width, a galvanized metal tie of not less than 0.054 inches thick (1.37mm)(16ga) and 1 1/2 inches (38 mm) wide shall be fastened across and to each side of the opening with not less than eight 16d nails at each side or equivalent. See Figure R602.6.1.

Exception: When the entire side of the wall with the notch or cut is covered by wood structural panel sheathing.
(Fire Prevention and Building Safety Commission; 675 IAC 14-4.3-94.6; filed Mar 6, 2008, 11:13 a.m.: 20080402-IR-675070483FRA; readopted filed Aug 4, 2011, 8:35 a.m.: 20110831-IR-675110254RFA)

675 IAC 14-4.3-95 Figure R602.6(2); notching and bored hole limitations for interior nonbearing walls

Authority: IC 22-13-2-2; IC 22-13-2-13
Affected: IC 22-12; IC 22-13; IC 22-14; IC 22-15; IC 36-7

Sec. 95. Delete FIGURE R602.6(2) and insert FIGURE R602.6(2) to read as follows:

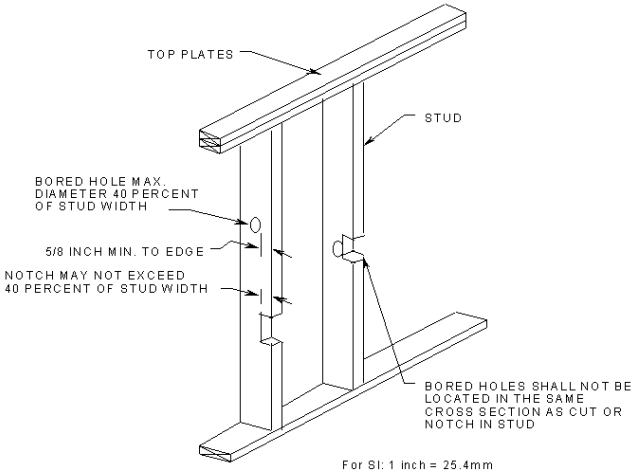

FIGURE R602.6(2)
NOTCHING AND BORED HOLE LIMITATIONS FOR INTERIOR NONBEARING WALLS

(Fire Prevention and Building Safety Commission; 675 IAC 14-4.3-95; filed Jun 13, 2005, 3:00 p.m.: 28 IR 3276, eff 90 days after filing with the Secretary of State; readopted filed Aug 4, 2011, 8:35 a.m.: 20110831-IR-675110254RFA)

675 IAC 14-4.3-96 Section R602.7; headers

Authority: IC 22-13-2-2; IC 22-13-2-13
Affected: IC 22-12; IC 22-13; IC 22-14; IC 22-15; IC 36-7

Sec. 96. Amend Section R602.7, Headers, by adding a section to read as follows: Section R602.7.3, Location. Headers less than 2 inches (51 mm) in width or built up of members less than 2 inches (51 mm) in width that span more than 8 feet (2,438 mm) or headers less than 4 inches (102 mm) in width or built up of members less than 4 inches (102 mm) in width that span more than 16 feet (4,877 mm) shall be located at the top of the wall immediately below the top plate.

Exception: When a minimum of 3/8 inch (10 mm) structural wood sheathing is applied from the bottom of the header to the top of the wall and all joints on structural members are fastened in accordance with TABLE R602.3(1) or TABLE R602.3(2).

(Fire Prevention and Building Safety Commission; 675 IAC 14-4.3-96; filed Jun 13, 2005, 3:00 p.m.: 28 IR 3276, eff 90 days after filing with the Secretary of State; filed Mar 6, 2008, 11:13 a.m.: 20080402-IR-675070483FRA; readopted filed Aug 4, 2011, 8:35 a.m.: 20110831-IR-675110254RFA)

675 IAC 14-4.3-96.5 Section R602.8; fireblocking required

Authority: IC 22-13-2-2; IC 22-13-2-13
Affected: IC 22-12; IC 22-13; IC 22-14; IC 22-15; IC 36-7

Sec. 96.5. Change item 4 in Section R602.8 to read as follows: 4. At openings around vents, pipes, ducts, cables, and wires at ceiling and floor level, with an approved material to resist the passage of flame and products of combustion. Approved materials shall have demonstrated that they comply with materials listed in R602.8.1 or any of the following:

a. Materials tested for noncombustibility in accordance with ASTM E136.

b. Materials tested under the fire conditions of ASTM E814 or UL 1479.

c. Materials tested for use as fireblocking material under the fire conditions of ASTM E 119 and installed in accordance with the specifications under which the material was tested.

(Fire Prevention and Building Safety Commission; 675 IAC 14-4.3-96.5; filed Mar 6, 2008, 11:13 a.m.: 20080402-IR-675070483FRA; readopted filed Aug 4, 2011, 8:35 a.m.: 20110831-IR-675110254RFA)

675 IAC 14-4.3-97 Section R602.10.1; braced wall lines (Repealed)

Sec. 97. *(Repealed by Fire Prevention and Building Safety Commission; filed Mar 6, 2008, 11:13 a.m.: 20080402-IR-675070483FRA)*

675 IAC 14-4.3-98 Section R602.10.1.1; spacing

Authority: IC 22-13-2-2; IC 22-13-2-13
Affected: IC 22-12; IC 22-13; IC 22-14; IC 22-15; IC 36-7

Sec. 98. Change 2 in the exception to SECTION R602.10.1.1 to read as follows: The length-to-width ratio for the floor or roof diaphragm does not exceed 3:1. *(Fire Prevention and Building Safety Commission; 675 IAC 14-4.3-98; filed Jun 13, 2005, 3:00 p.m.: 28 IR 3277, eff 90 days after filing with the Secretary of State; readopted filed Aug 4, 2011, 8:35 a.m.: 20110831-IR-675110254RFA)*

675 IAC 14-4.3-99 Table R602.10.1; wall bracing

Authority: IC 22-13-2-2; IC 22-13-2-13
Affected: IC 22-12; IC 22-13; IC 22-14; IC 22-15; IC 36-7

Sec. 99. Change footnote (a) in TABLE R602.10.1 by deleting "Section 1615 of the International Building Code" and substituting "the Indiana Building Code (675 IAC 13)". *(Fire Prevention and Building Safety Commission; 675 IAC 14-4.3-99; filed Jun 13, 2005, 3:00 p.m.: 28 IR 3277, eff 90 days after filing with the Secretary of State; readopted filed Aug 4, 2011, 8:35 a.m.: 20110831-IR-675110254RFA)*

675 IAC 14-4.3-100 Section R602.10.5; continuous structural panel sheathing

Authority: IC 22-13-2-2; IC 22-13-2-13
Affected: IC 22-12; IC 22-13; IC 22-14; IC 22-15; IC 36-7

Sec. 100. Make the following changes to Section R602.10.5:

(1) In the first sentence, delete "all walls and interior braced wall lines," and insert "an exterior wall line," and, after "braced wall panel lengths", insert "for such a wall line".

(2) In the second sentence, after "R602.10.5", insert "for such a wall line".

(3) Add an exception to read as follows: Exception: Vertical wall segments in the first of one or first of two story buildings next to garage openings shall be permitted to have 6:1 height-to-width ratio (with height being measured from top of header to sill plate) when constructed in accordance with the following provisions. Each panel shall have a length of not less than 16 inches (406 mm) and a height of not more than 10 feet (3,048 mm). Each panel shall be sheathed on one face with a single layer of 3/8 inch minimum thickness (9.5 mm) wood structural panel sheathing nailed with 8d common or galvanized box nails in accordance with Figure R602.10.5(2). The wood structural panel sheathing shall extend up over the solid sawn or glued-laminated header and shall be nailed in accordance with Figure R602.10.5(2). The header shall extend between the inside faces of the first full-length outer studs of each panel. The clear span of the header between the inner studs of each panel shall be not less than 6 feet (1,829 mm) and not more than 18 feet (5,486 mm) in length. A strap with an uplift capacity of not less than 1,000 pounds (454 kg) shall fasten the header to the side of the inner studs opposite the sheathing. Two anchor bolts shall be installed in accordance with Section R403.1.6, and plate washers shall be a minimum of 2 inches by 2 inches by 3/16 inch (51 mm by 51 mm by 4.8 mm) thick and shall be used on each bolt. This exception is only permitted in Seismic Design Categories A-C.

(4) Add FIGURE R602.10.5(2) to read as follows:

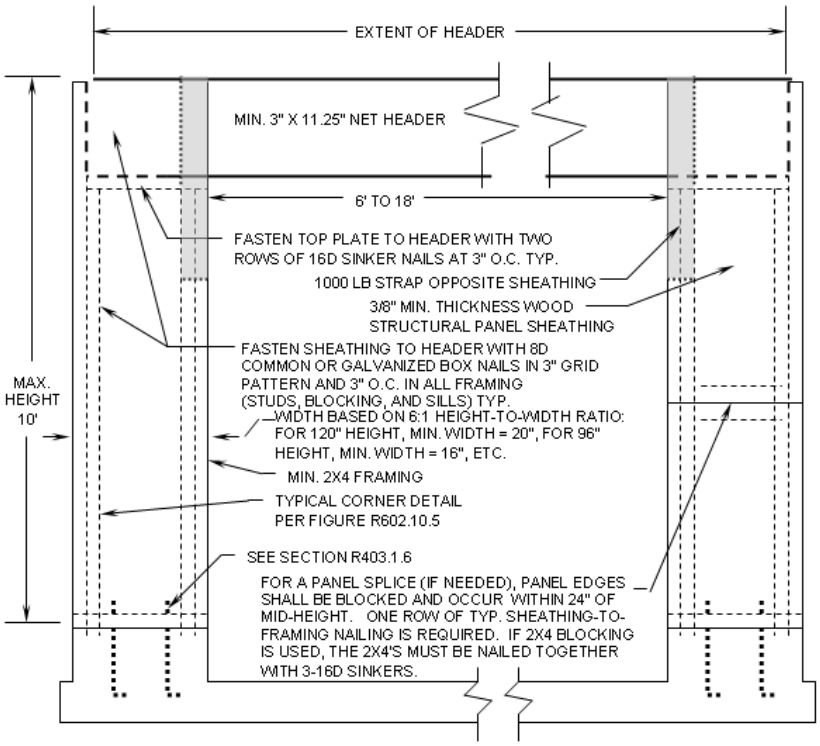

FIGURE R602.10.5(2)
GARAGE DOOR BRACED WALL PANEL FOR USE WITH CONTINUOUSLY SHEATHED WALLS

(Fire Prevention and Building Safety Commission; 675 IAC 14-4.3-100; filed Jun 13, 2005, 3:00 p.m.: 28 IR 3277, eff 90 days after filing with the Secretary of State; filed Oct 18, 2006, 2:39 p.m.: 20061115-IR-675050348FRA; filed Mar 6, 2008, 11:13 a.m.: 20080402-IR-675070483FRA; readopted filed Aug 4, 2011, 8:35 a.m.: 20110831-IR-675110254RFA)

675 IAC 14-4.3-100.5 Section R602.10.8; connections

Authority: IC 22-13-2-2; IC 22-13-2-13
Affected: IC 22-12; IC 22-13; IC 22-14; IC 22-15; IC 36-7

Sec. 100.5. In the second sentence of Section R602.10.8, after "sills", add "or soles.". *(Fire Prevention and Building Safety Commission; 675 IAC 14-4.3-100.5; filed Mar 6, 2008, 11:13 a.m.: 20080402-IR-675070483FRA; readopted filed Aug 4, 2011, 8:35 a.m.: 20110831-IR-675110254RFA)*

675 IAC 14-4.3-101 Table R602.10.11; adjustment of bracing amounts for interior braced wall lines according to braced wall line spacing

Authority: IC 22-13-2-2; IC 22-13-2-13
Affected: IC 22-12; IC 22-13; IC 22-14; IC 22-15; IC 36-7

Sec. 101. Change TABLE R602.10.11 by deleting "Table R602.10.3" in the second column and substituting "Table R602.10.1". *(Fire Prevention and Building Safety Commission; 675 IAC 14-4.3-101; filed Jun 13, 2005, 3:00 p.m.: 28 IR 3278, eff 90 days after filing with the Secretary of State; readopted filed Aug 4, 2011, 8:35 a.m.: 20110831-IR-675110254RFA)*

675 IAC 14-4.3-102 Section R604.1; identification and grade

Authority: IC 22-13-2-2; IC 22-13-2-13
Affected: IC 22-12; IC 22-13; IC 22-14; IC 22-15; IC 36-7

Sec. 102. In the last sentence of SECTION R604.1, delete "or certificate of inspection issued by an approved agency". *(Fire Prevention and Building Safety Commission; 675 IAC 14-4.3-102; filed Jun 13, 2005, 3:00 p.m.: 28 IR 3278, eff 90 days after filing with the Secretary of State; readopted filed Aug 4, 2011, 8:35 a.m.: 20110831-IR-675110254RFA)*

675 IAC 14-4.3-103 Section R604.3; installation

Authority: IC 22-13-2-2; IC 22-13-2-13
Affected: IC 22-12; IC 22-13; IC 22-14; IC 22-15; IC 36-7

Sec. 103. Delete the last sentence of SECTION R604.3 without substitution. *(Fire Prevention and Building Safety Commission; 675 IAC 14-4.3-103; filed Jun 13, 2005, 3:00 p.m.: 28 IR 3278, eff 90 days after filing with the Secretary of State; readopted filed Aug 4, 2011, 8:35 a.m.: 20110831-IR-675110254RFA)*

675 IAC 14-4.3-104 Section R605.1; identification and grade

Authority: IC 22-13-2-2; IC 22-13-2-13
Affected: IC 22-12; IC 22-13; IC 22-14; IC 22-15; IC 36-7

Sec. 104. Delete, from the first sentence of SECTION R605.1, "or certificate of inspection issued by an approved agency". *(Fire Prevention and Building Safety Commission; 675 IAC 14-4.3-104; filed Jun 13, 2005, 3:00 p.m.: 28 IR 3278, eff 90 days after filing with the Secretary of State; readopted filed Aug 4, 2011, 8:35 a.m.: 20110831-IR-675110254RFA)*

675 IAC 14-4.3-105 Section R606.1.1; professional registration not required

Authority: IC 22-13-2-2; IC 22-13-2-13
Affected: IC 22-12; IC 22-13; IC 22-14; IC 22-15; IC 36-7

Sec. 105. Delete SECTION R606.1.1. *(Fire Prevention and Building Safety Commission; 675 IAC 14-4.3-105; filed Jun 13, 2005, 3:00 p.m.: 28 IR 3278, eff 90 days after filing with the Secretary of State; readopted filed Aug 4, 2011, 8:35 a.m.: 20110831-IR-675110254RFA)*

675 IAC 14-4.3-106 Section R606.2; thickness of masonry

Authority: IC 22-13-2-2; IC 22-13-2-13
Affected: IC 22-12; IC 22-13; IC 22-14; IC 22-15; IC 36-7

Sec. 106. Add a second sentence to SECTION R606.2 to read as follows: The nominal thickness of foundation walls shall conform to the requirements of SECTION R404. *(Fire Prevention and Building Safety Commission; 675 IAC 14-4.3-106; filed Jun 13, 2005, 3:00 p.m.: 28 IR 3278, eff 90 days after filing with the Secretary of State; readopted filed Aug 4, 2011, 8:35 a.m.: 20110831-IR-675110254RFA)*

675 IAC 14-4.3-107 Section R606.2.1; minimum thickness

Authority: IC 22-13-2-2; IC 22-13-2-13
Affected: IC 22-12; IC 22-13; IC 22-14; IC 22-15

Sec. 107. Delete the last sentence of SECTION R606.2.1 and substitute to read as follows: The minimum thickness of masonry foundation walls shall comply with SECTION R404. Masonry walls, except masonry foundation walls, shall be laterally supported in either the horizontal or vertical direction at intervals as required by SECTION R606.8. *(Fire Prevention and Building Safety Commission; 675 IAC 14-4.3-107; filed Jun 13, 2005, 3:00 p.m.: 28 IR 3278, eff 90 days after filing with the Secretary of State; readopted filed Aug 4, 2011, 8:35 a.m.: 20110831-IR-675110254RFA)*

675 IAC 14-4.3-108 Section R606.10; anchorage

Authority: IC 22-13-2-2; IC 22-13-2-13
Affected: IC 22-12; IC 22-13; IC 22-14; IC 22-15; IC 36-7

Sec. 108. Delete Section R606.10 and substitute to read as follows: Above grade masonry walls shall be anchored to floor, roof, and foundation systems in accordance with details of Figure R606.10(1). In seismic zone C_1, above grade masonry walls shall be anchored to floor, roof, and foundation systems in accordance with details of Figure R606.10(1) and Figure R606.10(2). Below grade masonry foundation walls shall be designed and constructed to comply with Sections R403 and R404. *(Fire Prevention and Building Safety Commission; 675 IAC 14-4.3-108; filed Jun 13, 2005, 3:00 p.m.: 28 IR 3278, eff 90 days after filing with the Secretary of State; filed Mar 6, 2008, 11:13 a.m.: 20080402-IR-675070483FRA; readopted filed Aug 4, 2011, 8:35 a.m.: 20110831-IR-675110254RFA)*

675 IAC 14-4.3-109 Section R606.11; seismic requirements

Authority: IC 22-13-2-2; IC 22-13-2-13
Affected: IC 22-12; IC 22-13; IC 22-14; IC 22-15; IC 36-7

Sec. 109. The seismic requirements of this section shall apply to the design of above grade masonry walls and the construction of above grade masonry elements located in seismic design category C and C_1. Structures located in seismic design category C and C_1 shall also comply with the requirements in Section R606.11.2. These requirements shall not apply to glass units conforming to Section R610, masonry veneer conforming to Section R703.7, or below grade masonry foundation walls conforming to Section R404. *(Fire Prevention and Building Safety Commission; 675 IAC 14-4.3-109; filed Jun 13, 2005, 3:00 p.m.: 28 IR 3278, eff 90 days after filing with the Secretary of State; filed Mar 6, 2008, 11:13 a.m.: 20080402-IR-675070483FRA; readopted filed Aug 4, 2011, 8:35 a.m.: 20110831-IR-675110254RFA)*

675 IAC 14-4.3-110 Section R606.11.2; seismic design category C

Authority: IC 22-13-2-2; IC 22-13-2-13
Affected: IC 22-12; IC 22-13; IC 22-14; IC 22-15; IC 36-7

Sec. 110. Make the following changes to Section R606.11.2:

(1) Change the title and text of Section R606.11.2 to read as follows: Seismic Design Category C and C_1. Above grade masonry walls in structures located in seismic design category C and C_1 shall comply with the requirements of this Section.

(2) Below grade masonry foundation walls shall be designed and constructed to comply with Section R404.

(Fire Prevention and Building Safety Commission; 675 IAC 14-4.3-110; filed Jun 13, 2005, 3:00 p.m.: 28 IR 3278, eff 90 days after filing with the Secretary of State; filed Mar 6, 2008, 11:13 a.m.: 20080402-IR-675070483FRA; readopted filed Aug 4, 2011, 8:35 a.m.: 20110831-IR-675110254RFA)

675 IAC 14-4.3-111 Figure R606.10(2); requirements for reinforced grouted masonry construction in Seismic Design Category C

Authority: IC 22-13-2-2; IC 22-13-2-13
Affected: IC 22-12; IC 22-13; IC 22-14; IC 22-15; IC 36-7

Sec. 111. Add, to the end of the title to FIGURE R606.10(2), "and C_1". *(Fire Prevention and Building Safety Commission; 675 IAC 14-4.3-111; filed Jun 13, 2005, 3:00 p.m.: 28 IR 3279, eff 90 days after filing with the Secretary of State; readopted filed Aug 4, 2011, 8:35 a.m.: 20110831-IR-675110254RFA)*

675 IAC 14-4.3-112 Section R607.1.2; masonry in seismic design categories A, B, C, and C_1

Authority: IC 22-13-2-2; IC 22-13-2-13
Affected: IC 22-12; IC 22-13; IC 22-14; IC 22-15; IC 36-7

Sec. 112. Change SECTION R607.1.2 to read as follows: R607.1.2 Masonry in Seismic Design Categories A, B, C, and C_1. Mortar for masonry serving as the lateral-force-resisting system in Seismic Design Categories A, B, C, and C_1 shall be Type M, S, or N mortar. *(Fire Prevention and Building Safety Commission; 675 IAC 14-4.3-112; filed Jun 13, 2005, 3:00 p.m.: 28 IR 3279, eff 90 days after filing with the Secretary of State; readopted filed Aug 4, 2011, 8:35 a.m.: 20110831-IR-675110254RFA)*

675 IAC 14-4.3-113 Section R609.1.5; cleanouts

Authority: IC 22-13-2-2; IC 22-13-2-13
Affected: IC 22-12; IC 22-13; IC 22-14; IC 22-15; IC 36-7

Sec. 113. Change SECTION R609.1.5 to read as follows: Cleanouts shall be provided as specified in this section. The cleanouts shall be sealed before grouting. *(Fire Prevention and Building Safety Commission; 675 IAC 14-4.3-113; filed Jun 13, 2005, 3:00 p.m.: 28 IR 3279, eff 90 days after filing with the Secretary of State; readopted filed Aug 4, 2011, 8:35 a.m.: 20110831-IR-675110254RFA)*

675 IAC 14-4.3-114 Section R609.4.1; construction

Authority: IC 22-13-2-2; IC 22-13-2-13
Affected: IC 22-12; IC 22-13; IC 22-14; IC 22-15; IC 36-7

Sec. 114. Delete, in SECTION R609.4.1, Item 4, the following: "and special inspection during grouting shall be required". *(Fire Prevention and Building Safety Commission; 675 IAC 14-4.3-114; filed Jun 13, 2005, 3:00 p.m.: 28 IR 3279, eff 90 days after filing with the Secretary of State; readopted filed Aug 4, 2011, 8:35 a.m.: 20110831-IR-675110254RFA)*

675 IAC 14-4.3-115 Section R611.1; general

Authority: IC 22-13-2-2; IC 22-13-2-13
Affected: IC 22-12; IC 22-13; IC 22-14; IC 22-15; IC 36-7

Sec. 115. Delete the last sentence of Section R611.1 and substitute to read as follows: In seismic design category C_1, for a townhouse having one or more insulating concrete form (ICF) exterior walls, other exterior walls and interior load bearing walls shall comply with the applicable anchorage and seismic provisions of this code. *(Fire Prevention and Building Safety Commission; 675 IAC 14-4.3-115; filed Jun 13, 2005, 3:00 p.m.: 28 IR 3279, eff 90 days after filing with the Secretary of State; filed Mar 6, 2008, 11:13 a.m.: 20080402-IR-675070483FRA; readopted filed Aug 4, 2011, 8:35 a.m.: 20110831-IR-675110254RFA)*

675 IAC 14-4.3-115.5 Section R702.3.7; limitations

Authority: IC 22-13-2-2; IC 22-13-2-13
Affected: IC 22-12; IC 22-13; IC 22-14; IC 22-15; IC 36-7

Sec. 115.5. Add a title and the text of Section R702.3.7 to read as follows: R702.3.7 Limitations. Water-resistant gypsum backing board shall not be used where there will be direct exposure to water or in areas subject to continuous high humidity. *(Fire Prevention and Building Safety Commission; 675 IAC 14-4.3-115.5; filed Mar 6, 2008, 11:13 a.m.: 20080402-IR-675070483FRA; readopted filed Aug 4, 2011, 8:35 a.m.: 20110831-IR-675110254RFA)*

675 IAC 14-4.3-115.6 Section R702.4.4; cement, fiber-cement, and glass mat gypsum backers

Authority: IC 22-13-2-2; IC 22-13-2-13
Affected: IC 22-12; IC 22-13; IC 22-14; IC 22-15; IC 36-7

Sec. 115.6. Add a title and the text of Section R702.4.4 to read as follows: R702.4.4 Cement, fiber-cement, and glass mat gypsum backer. Cement, fiber-cement, and glass mat gypsum backers in compliance with ASTM C 1288, C 1325, or C 1178 and installed in accordance with manufacturers' recommendations shall be permitted as backers for wall tile in tub and shower areas and wall panels in shower areas. *(Fire Prevention and Building Safety Commission; 675 IAC 14-4.3-115.6; filed Mar 6, 2008,*

11:13 a.m.: 20080402-IR-675070483FRA; readopted filed Aug 4, 2011, 8:35 a.m.: 20110831-IR-675110254RFA)

675 IAC 14-4.3-116 Table 703.4; weather-resistant siding attachment and minimum thickness

Authority: IC 22-13-2-2; IC 22-13-2-13
Affected: IC 22-12; IC 22-13; IC 22-14; IC 22-15; IC 36-7

Sec. 116. Change TABLE R703.4 as follows:

(1) Change footnote m to read as follows: For masonry veneer, a weather-resistant sheathing paper is not required over water-repellent sheathing materials applied according to manufacturer's instructions and a 3/4 inch (19 mm) air space is provided. When the 3/4 inch (19 mm) space is filled with mortar, a weather-resistant sheathing paper is required over the sheathing.

(2) In the column titled "Sheathing paper required", add a footnote designation "aa" at all three (3) places for Horizontal Aluminum and for Vinyl Siding.

(3) Add a new footnote "aa" to read as follows: Unless required by the siding manufacturer's installation instructions.

(Fire Prevention and Building Safety Commission; 675 IAC 14-4.3-116; filed Jun 13, 2005, 3:00 p.m.: 28 IR 3279, eff 90 days after filing with the Secretary of State; filed Mar 6, 2008, 11:13 a.m.: 20080402-IR-675070483FRA; readopted filed Aug 4, 2011, 8:35 a.m.: 20110831-IR-675110254RFA)

675 IAC 14-4.3-117 Section R703.7; stone and masonry veneer, general

Authority: IC 22-13-2-2; IC 22-13-2-13
Affected: IC 22-12; IC 22-13; IC 22-14; IC 22-15; IC 36-7

Sec. 117. Change Exception 2 in SECTION R703.7 by adding "and C_1" after "C" and before the ",". *(Fire Prevention and Building Safety Commission; 675 IAC 14-4.3-117; filed Jun 13, 2005, 3:00 p.m.: 28 IR 3279, eff 90 days after filing with the Secretary of State; readopted filed Aug 4, 2011, 8:35 a.m.: 20110831-IR-675110254RFA)*

675 IAC 14-4.3-118 Figure R703.7; masonry veneer wall details

Authority: IC 22-13-2-2; IC 22-13-2-13
Affected: IC 22-12; IC 22-13; IC 22-14; IC 22-15; IC 36-7

Sec. 118. Change FIGURE R703.7 by changing "1 inch" to "¾ inch" in two (2) places. *(Fire Prevention and Building Safety Commission; 675 IAC 14-4.3-118; filed Jun 13, 2005, 3:00 p.m.: 28 IR 3280, eff 90 days after filing with the Secretary of State; readopted filed Aug 4, 2011, 8:35 a.m.: 20110831-IR-675110254RFA)*

675 IAC 14-4.3-119 Section R703.7.4.2; air space

Authority: IC 22-13-2-2; IC 22-13-2-13
Affected: IC 22-12; IC 22-13; IC 22-14; IC 22-15; IC 36-7

Sec. 119. Delete the text of Section R703.7.4.2 and substitute to read as follows: The masonry veneer shall be separated from the sheathing by an air space of not less than 3/4 inch (19 mm) but not more than 4 1/2 inches (114 mm). The weather-resistant sheathing paper as required by Section R703.2 is not required over water-repellent sheathing materials installed according to manufacturer's instructions. Mortar is permitted to encroach into the air space or make incidental contact with the sheathing or the sheathing paper or equivalent. *(Fire Prevention and Building Safety Commission; 675 IAC 14-4.3-119; filed Jun 13, 2005, 3:00 p.m.: 28 IR 3280, eff 90 days after filing with the Secretary of State; filed Mar 4, 2009, 1:57 p.m.: 20090401-IR-675080604FRA; readopted filed Aug 4, 2011, 8:35 a.m.: 20110831-IR-675110254RFA)*

675 IAC 14-4.3-120 Section R703.7.4.3; mortar or grout filled

Authority: IC 22-13-2-2; IC 22-13-2-13
Affected: IC 22-12; IC 22-13; IC 22-14; IC 22-15; IC 36-7

Sec. 120. (a) Amend Section R703.7.4.3 by deleting "1 inch (25.4 mm)" and inserting "3/4 inch (19 mm)."

(b) Change the first sentence of Section R703.7.4.3 to read as follows: As an alternate method to apply stone and masonry veneer, mortar or grout shall be permitted to fill the air space when the requirements of this Section R703.7.4.3 are met. *(Fire Prevention and Building Safety Commission; 675 IAC 14-4.3-120; filed Jun 13, 2005, 3:00 p.m.: 28 IR 3280, eff 90 days after filing with the Secretary of State; filed Mar 4, 2009, 1:57 p.m.: 20090401-IR-675080604FRA; readopted filed Aug 4, 2011, 8:35 a.m.: 20110831-IR-675110254RFA)*

675 IAC 14-4.3-121 Section R703.7.6; weepholes

Authority: IC 22-13-2-2; IC 22-13-2-13
Affected: IC 22-12; IC 22-13; IC 22-14; IC 22-15; IC 36-7

Sec. 121. Delete the title and text of SECTION R703.7.6 and substitute as follows: R703.7.6 Drained cavity. The ¾ inch (19 mm) air cavity shall be drained to the exterior of the structure at intervals of not more than 33 inches (838 mm) on center. Each drain shall be not less than $^{3}/_{16}$ inch (4.8 mm) in diameter, located immediately above the flashing. For dwellings with crawl spaces, the air cavity may be drained as shown in FIGURE R703.7.6(1). For dwellings with basements, the air cavity may be drained as shown in FIGURE R703.7.6(2).

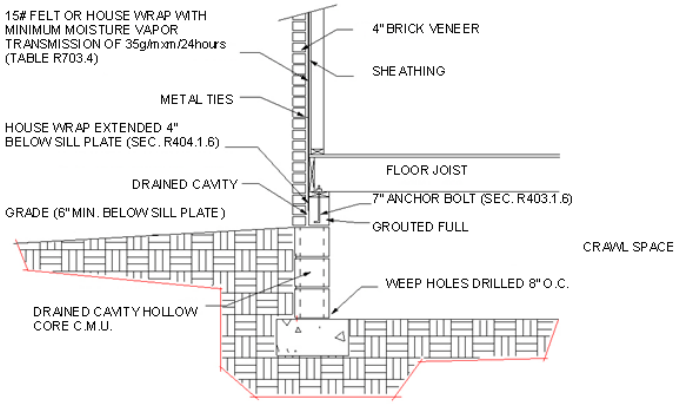

FIGURE R703.7.6(1)

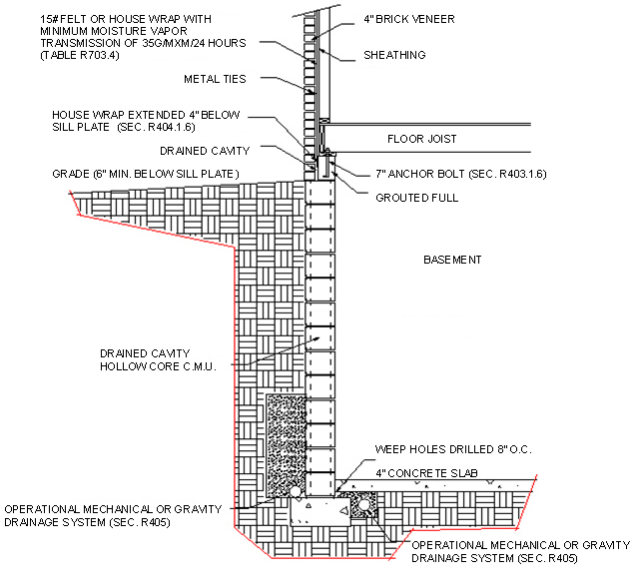

FIGURE R703.7.6(2)

(Fire Prevention and Building Safety Commission; 675 IAC 14-4.3-121; filed Jun 13, 2005, 3:00 p.m.: 28 IR 3280, eff 90 days after filing with the Secretary of State; readopted filed Aug 4, 2011, 8:35 a.m.: 20110831-IR-675110254RFA)

675 IAC 14-4.3-122 Section R703.8; flashing

Authority: IC 22-13-2-2; IC 22-13-2-13
Affected: IC 22-12; IC 22-13; IC 22-14; IC 22-15; IC 36-7

Sec. 122. In SECTION 703.8, delete Item 1 and substitute to read as follows: 1. Corrosion-resistive flashing shall be provided at the sill, jambs, and top of all windows and door openings, applied shingle fashion in such a manner as to be leakproof. Tops of trim over these openings will also be head flashed in a manner as to direct water over the exterior wall cladding and not behind such trim. This head flashing may be omitted when protected by a soffit, porch, or similar overhang. Windows, indicated by the manufacturer as self-flashing, having a continuous lap of not less than 1 c inches (28 mm) over the sheathing material or building paper around the entire perimeter of the opening, including corners, do not require additional flashing. *(Fire Prevention and Building Safety Commission; 675 IAC 14-4.3-122; filed Jun 13, 2005, 3:00 p.m.: 28 IR 3280, eff 90 days after filing with the Secretary of State; readopted filed Aug 4, 2011, 8:35 a.m.: 20110831-IR-675110254RFA)*

675 IAC 14-4.3-123 Section R802.1; identification and grade

Authority: IC 22-13-2-2; IC 22-13-2-13
Affected: IC 22-12; IC 22-13; IC 22-14; IC 22-15; IC 36-7

Sec. 123. Delete the last sentence of SECTION R802.1. *(Fire Prevention and Building Safety Commission; 675 IAC 14-4.3-123; filed Jun 13, 2005, 3:00 p.m.: 28 IR 3281, eff 90 days after filing with the Secretary of State; readopted filed Aug 4, 2011, 8:35 a.m.: 20110831-IR-675110254RFA)*

675 IAC 14-4.3-124 Section R802.10.1; truss design drawings

Authority: IC 22-13-2-2; IC 22-13-2-13
Affected: IC 22-12; IC 22-13; IC 22-14; IC 22-15; IC 36-7

Sec. 124. Delete SECTION R802.10.1 and substitute to read as follows: Truss design drawings shall be provided to the building official as required by the General Administrative Rules (675 IAC 12) for Class 1 structures or by local ordinance for Class

2 structures. *(Fire Prevention and Building Safety Commission; 675 IAC 14-4.3-124; filed Jun 13, 2005, 3:00 p.m.: 28 IR 3281, eff 90 days after filing with the Secretary of State; readopted filed Aug 4, 2011, 8:35 a.m.: 20110831-IR-675110254RFA)*

675 IAC 14-4.3-125 Section R802.10.2; design

Authority: IC 22-13-2-2; IC 22-13-2-13
Affected: IC 22-12; IC 22-13; IC 22-14; IC 22-15; IC 36-7

Sec. 125. Delete the last sentence of SECTION R802.10.2. *(Fire Prevention and Building Safety Commission; 675 IAC 14-4.3-125; filed Jun 13, 2005, 3:00 p.m.: 28 IR 3281, eff 90 days after filing with the Secretary of State; readopted filed Aug 4, 2011, 8:35 a.m.: 20110831-IR-675110254RFA)*

675 IAC 14-4.3-125.5 Section R802.10.3; bracing

Authority: IC 22-13-2-2; IC 22-13-2-13
Affected: IC 22-12; IC 22-13; IC 22-14; IC 22-15; IC 36-7

Sec. 125.5. Change the last sentence of Section R802.10.3 to read as follows: In the absence of specific bracing requirements, trusses shall be braced in accordance with standard industry lateral restraint and diagonal bracing details. *(Fire Prevention and Building Safety Commission; 675 IAC 14-4.3-125.5; filed Mar 6, 2008, 11:13 a.m.: 20080402-IR-675070483FRA; readopted filed Aug 4, 2011, 8:35 a.m.: 20110831-IR-675110254RFA)*

675 IAC 14-4.3-126 Section R802.10.4; alterations to trusses

Authority: IC 22-13-2-2; IC 22-13-2-13
Affected: IC 22-12; IC 22-13; IC 22-14; IC 22-15; IC 25-4; IC 25-31; IC 36-7

Sec. 126. Change the first sentence of Section R802.10.4 to read as follows: Truss members shall not be cut, notched, drilled, spliced, or otherwise altered in any way without the acceptance of an architect registered under IC 25-4 or a professional engineer registered under IC 25-31, the manufacturer of the truss members, or approval by the building official. *(Fire Prevention and Building Safety Commission; 675 IAC 14-4.3-126; filed Jun 13, 2005, 3:00 p.m.: 28 IR 3281, eff 90 days after filing with the Secretary of State; filed Mar 6, 2008, 11:13 a.m.: 20080402-IR-675070483FRA; readopted filed Aug 4, 2011, 8:35 a.m.: 20110831-IR-675110254RFA)*

675 IAC 14-4.3-127 Section R802.10.5; truss to wall connection

Authority: IC 22-13-2-2; IC 22-13-2-13
Affected: IC 22-12; IC 22-13; IC 22-14; IC 22-15; IC 36-7

Sec. 127. Add exceptions to Section R802.10.5 to read as follows: Exceptions:

1. In exposure category B, 24" o/c maximum mono-pitch trusses up to 10' in length that are not girders. Such trusses shall be fastened with three 0.131" diameter × 3" long toenails at each bearing. Truss length shall be the horizontal projection of the truss including all overhangs.
2. In exposure category B, 24" o/c maximum trusses that are not mono-pitch trusses up to 30' in length that are not girders. Such trusses shall be fastened with three 0.131" diameter × 3" long toenails at each bearing. Truss length shall be the horizontal projection of the truss including all overhangs.

(Fire Prevention and Building Safety Commission; 675 IAC 14-4.3-127; filed Jun 13, 2005, 3:00 p.m.: 28 IR 3281, eff 90 days after filing with the Secretary of State; filed Mar 6, 2008, 11:13 a.m.: 20080402-IR-675070483FRA; readopted filed Aug 4, 2011, 8:35 a.m.: 20110831-IR-675110254RFA)

675 IAC 14-4.3-128 Section R803.2.1; identification and grade

Authority: IC 22-13-2-2; IC 22-13-2-13
Affected: IC 22-12; IC 22-13; IC 22-14; IC 22-15; IC 36-7

Sec. 128. Delete, from the first sentence of SECTION R803.2.1, "or certificate of inspection issued by an approved agency". *(Fire Prevention and Building Safety Commission; 675 IAC 14-4.3-128; filed Jun 13, 2005, 3:00 p.m.: 28 IR 3281, eff 90 days after filing with the Secretary of State; readopted filed Aug 4, 2011, 8:35 a.m.: 20110831-IR-675110254RFA)*

675 IAC 14-4.3-129 Section R806.1; ventilation required

Authority: IC 22-13-2-2; IC 22-13-2-13
Affected: IC 22-12; IC 22-13; IC 22-14; IC 22-15; IC 36-7

Sec. 129. Add an exception to Section R806.1 to read as follows: EXCEPTION: Mechanical ventilation is permitted provided the following conditions are met:

1. The installation complies with manufacturer's instructions.
2. A humidistat is included with the installation.
3. An ammeter or equivalent device is installed in a readily visible location.

(Fire Prevention and Building Safety Commission; 675 IAC 14-4.3-129; filed Jun 13, 2005, 3:00 p.m.: 28 IR 3281, eff 90 days after filing with the Secretary of State; readopted filed Aug 4, 2011, 8:35 a.m.: 20110831-IR-675110254RFA)

675 IAC 14-4.3-130 Section R808.1; combustible insulation

Authority: IC 22-13-2-2; IC 22-13-2-13
Affected: IC 22-12; IC 22-13; IC 22-14; IC 22-15; IC 36-7

Sec. 130. In SECTION R808.1, delete "Section N1102.1.11" and substitute "Chapter 11 of this code". *(Fire Prevention and Building Safety Commission; 675 IAC 14-4.3-130; filed Jun 13, 2005, 3:00 p.m.: 28 IR 3281, eff 90 days after filing with the Secretary of State; readopted filed Aug 4, 2011, 8:35 a.m.: 20110831-IR-675110254RFA)*

675 IAC 14-4.3-131 Section R903.4.1; overflow drains and scuppers

Authority: IC 22-13-2-2; IC 22-13-2-13
Affected: IC 22-12; IC 22-13; IC 22-14; IC 22-15; IC 36-7

Sec. 131. Delete the last paragraph of SECTION R903.4.1. *(Fire Prevention and Building Safety Commission; 675 IAC 14-4.3-131; filed Jun 13, 2005, 3:00 p.m.: 28 IR 3281, eff 90 days after filing with the Secretary of State; readopted filed Aug 4, 2011, 8:35 a.m.: 20110831-IR-675110254RFA)*

675 IAC 14-4.3-132 Section R904.3; material specifications and physical characteristics

Authority: IC 22-13-2-2; IC 22-13-2-13
Affected: IC 22-12; IC 22-13; IC 22-14; IC 22-15; IC 36-7

Sec. 132. Delete the last sentence of SECTION R904.3. *(Fire Prevention and Building Safety Commission; 675 IAC 14-4.3-132; filed Jun 13, 2005, 3:00 p.m.: 28 IR 3282, eff 90 days after filing with the Secretary of State; readopted filed Aug 4, 2011, 8:35 a.m.: 20110831-IR-675110254RFA)*

675 IAC 14-4.3-132.5 Section R905.2.8.1; base and cap flashing

Authority: IC 22-13-2-2; IC 22-13-2-13
Affected: IC 22-12; IC 22-13; IC 22-14; IC 22-15; IC 36-7

Sec. 132.5. Change Section R905.2.8.1 to read as follows: Base flashings (valley linings or base flashing at roof penetrations) and cap flashing (step, dormer, and counter flashing) shall be installed in accordance with manufacturer's installation instructions. Base flashing shall be of either corrosion-resistant metal of minimum nominal 0.019-inch thickness, mineral surface minimum 77 pounds (34.96 kg) per 100 square foot (3.76 kg/m^2) roll roofing, or any material approved for base flashing. Cap flashing shall be corrosion-resistant metal of minimum nominal 0.019-inch thickness. *(Fire Prevention and Building Safety Commission; 675*

IAC 14-4.3-132.5; filed Mar 6, 2008, 11:13 a.m.: 20080402-IR-675070483FRA; readopted filed Aug 4, 2011, 8:35 a.m.: 20110831-IR-675110254RFA)

675 IAC 14-4.3-132.6 Section R905.2.8.2; valleys

Authority: IC 22-13-2-2; IC 22-13-2-13
Affected: IC 22-12; IC 22-13; IC 22-14; IC 22-15; IC 36-7

Sec. 132.6. (a) In Section R905.2.8.2, item 2, delete "ASTM D 249" and substitute "ASTM D 3909 or ASTM D 6380 Class M".

(b) In Section R905.2.8.2, item 3, delete "ASTM D 224 Type II or Type III" and substitute "ASTM D 6380 Class S Type III, Class M Type II, or ASTM D 3909". *(Fire Prevention and Building Safety Commission; 675 IAC 14-4.3-132.6; filed Mar 6, 2008, 11:13 a.m.: 20080402-IR-675070483FRA; readopted filed Aug 4, 2011, 8:35 a.m.: 20110831-IR-675110254RFA)*

675 IAC 14-4.3-132.7 Section R905.2.8.3; crickets and saddles

Authority: IC 22-13-2-2; IC 22-13-2-13
Affected: IC 22-12; IC 22-13; IC 22-14; IC 22-15; IC 36-7

Sec. 132.7. Change Section R905.2.8.3 to read as follows: A cricket or saddle shall be installed on the ridge side of any chimney more than 30 inches (762 mm) wide as measured perpendicular to the slope. Cricket or saddle coverings shall be sheet metal in accordance with Section R905.2.8.1 or of the same material as the roof covering. Base and cap flashing of the cricket or saddle shall also be in accordance with Section R905.2.8.1. *(Fire Prevention and Building Safety Commission; 675 IAC 14-4.3-132.7; filed Mar 6, 2008, 11:13 a.m.: 20080402-IR-675070483FRA; readopted filed Aug 4, 2011, 8:35 a.m.: 20110831-IR-675110254RFA)*

675 IAC 14-4.3-133 Section R905.5.3; underlayment

Authority: IC 22-13-2-2; IC 22-13-2-13
Affected: IC 22-12; IC 22-13; IC 22-14; IC 22-15; IC 36-7

Sec. 133. In the first sentence of SECTION R905.5.3 delete the phrase "is 25°F (-4°C) or less" and insert "is less than 25°F(-4°C)". *(Fire Prevention and Building Safety Commission; 675 IAC 14-4.3-133; filed Jun 13, 2005, 3:00 p.m.: 28 IR 3282, eff 90 days after filing with the Secretary of State; readopted filed Aug 4, 2011, 8:35 a.m.: 20110831-IR-675110254RFA)*

675 IAC 14-4.3-134 Section R907.3; recovering versus replacement (Repealed)

Sec. 134. *(Repealed by Fire Prevention and Building Safety Commission; filed Mar 6, 2008, 11:13 a.m.: 20080402-IR-675070483FRA)*

675 IAC 14-4.3-135 Figure R1001.6; termination

Authority: IC 22-13-2-2; IC 22-13-2-13
Affected: IC 22-12; IC 22-13; IC 22-14; IC 22-15; IC 36-7

Sec. 135. Add FIGURE R1001.6 as follows:

FIGURE R1001.6
Chimney Termination

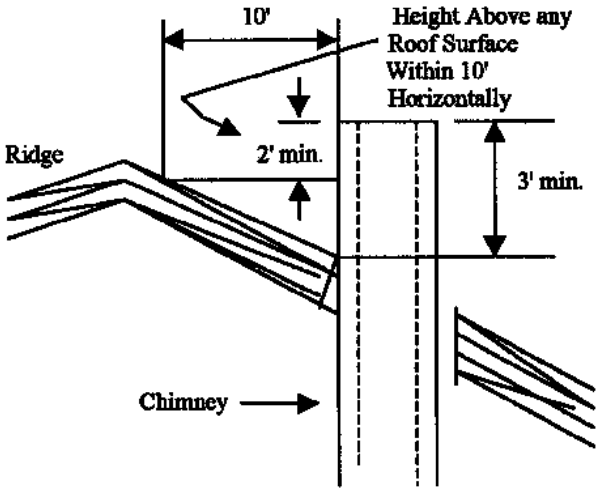

(Fire Prevention and Building Safety Commission; 675 IAC 14-4.3-135; filed Jun 13, 2005, 3:00 p.m.: 28 IR 3282, eff 90 days after filing with the Secretary of State; readopted filed Aug 4, 2011, 8:35 a.m.: 20110831-IR-675110254RFA)

675 IAC 14-4.3-136 Section R1003.3; seismic reinforcing

Authority: IC 22-13-2-2; IC 22-13-2-13
Affected: IC 22-12; IC 22-13; IC 22-14; IC 22-15; IC 36-7

Sec. 136. Change the first sentence of SECTION R1003.3 to read as follows: Masonry or concrete chimneys in Seismic Design Category C_1 shall be reinforced. *(Fire Prevention and Building Safety Commission; 675 IAC 14-4.3-136; filed Jun 13, 2005, 3:00 p.m.: 28 IR 3282, eff 90 days after filing with the Secretary of State; readopted filed Aug 4, 2011, 8:35 a.m.: 20110831-IR-675110254RFA)*

675 IAC 14-4.3-137 Section R1003.4; seismic anchorage

Authority: IC 22-13-2-2; IC 22-13-2-13
Affected: IC 22-12; IC 22-13; IC 22-14; IC 22-15; IC 36-7

Sec. 137. Change SECTION R1003.4 by deleting D_1 and D_2 and substituting C_1. *(Fire Prevention and Building Safety Commission; 675 IAC 14-4.3-137; filed Jun 13, 2005, 3:00 p.m.: 28 IR 3282, eff 90 days after filing with the Secretary of State; readopted filed Aug 4, 2011, 8:35 a.m.: 20110831-IR-675110254RFA)*

675 IAC 14-4.3-138 Section R1005.1; exterior air (Repealed)

Sec. 138. *(Repealed by Fire Prevention and Building Safety Commission; filed Mar 6, 2008, 11:13 a.m.: 20080402-IR-675070483FRA)*

675 IAC 14-4.3-139 Chapter 11; energy efficiency (Repealed)

Sec. 139. *(Repealed by Fire Prevention and Building Safety Commission; filed Jan 6, 2012, 10:25 a.m.: 20120201-IR-675110084FRA, eff 90 days after filing with the Publisher)*

675 IAC 14-4.3-139.1 Chapter 11; energy efficiency

Authority: IC 22-13-2
Affected: IC 22-13

Sec. 139.1. Delete the text of Chapter 11 in its entirety and substitute the following modified text from Chapter 11 of the 2009 International Residential Code, first printing, published by the International Code Council, Inc., 4051 West Flossmoor Road, Country Club Hills, IL 60478-5795:

SECTION N1101; GENERAL N1101.1 Scope.

This chapter regulates the energy efficiency for the design and construction of buildings regulated by this code.

Exception: Portions of the building envelope that do not enclose conditioned space are exempt from building thermal envelope provisions of this chapter.

N1101.2 Compliance. Compliance shall be demonstrated by meeting the requirements of this chapter. Climate zones from Figure N1101.2 or Table N1101.2 shall be used in determining the applicable requirements from this chapter.

FIGURE N1101.2
INDIANA CLIMATE ZONES

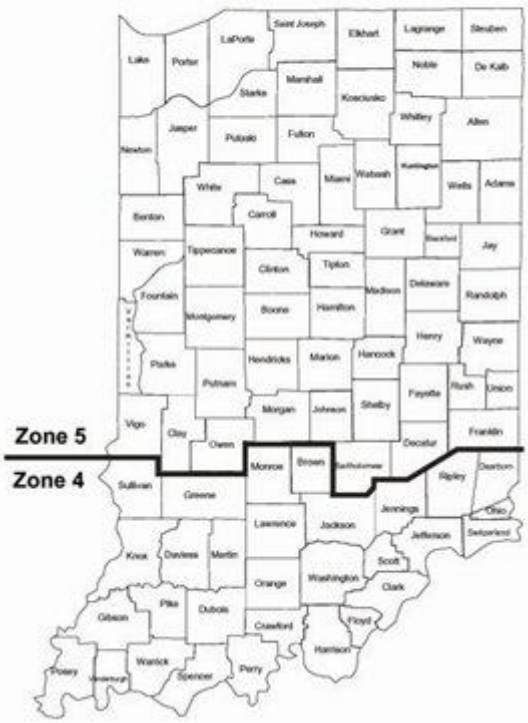

TABLE N1101.2
CLIMATE ZONES AND MOISTURE REGIMES OF INDIANA COUNTIES
Key: A — Moist

5A Adams	5A Elkhart	4A Jefferson	4A Ohio	4A Sullivan
5A Allen	5A Fayette	4A Jennings	4A Orange	4A Switzerland
5A Bartholomew	4A Floyd	5A Johnson	5A Owen	5A Tippecanoe
5A Benton	5A Fountain	4A Knox	5A Parke	5A Tipton
5A Blackford	5A Franklin	5A Kosciusko	4A Perry	5A Union
5A Boone	5A Fulton	5A LaGrange	4A Pike	4A Vanderburgh
4A Brown	4A Gibson	5A Lake	5A Porter	5A Vermillion
5A Carroll	5A Grant	5A LaPorte	4A Posey	5A Vigo
5A Cass	4A Greene	4A Lawrence	5A Pulaski	5A Wabash

4A Clark	5A Hamilton	5A Madison	5A Putnam	5A Warren
5A Clay	5A Hancock	5A Marion	5A Randolph	4A Warrick
5A Clinton	4A Harrison	5A Marshall	4A Ripley	4A Washington
4A Crawford	5A Hendricks	4A Martin	5A Rush	5A Wayne
4A Daviess	5A Henry	5A Miami	4A Scott	5A Wells
4A Dearborn	5A Howard	4A Monroe	5A Shelby	5A White
5A Decatur	5A Huntington	5A Montgomery	4A Spencer	5A Whitley
5A Dekalb	4A Jackson	5A Morgan	5A Starke	
5A Delaware	5A Jasper	5A Newton	5A Steuben	
4A Dubois	5A Jay	5A Noble	5A St. Joseph	

N1101.3 Identification. Materials, systems and equipment shall be identified in a manner that will allow a determination of compliance with the applicable provisions of this chapter.

N1101.4 Building thermal envelope insulation. Each piece of building thermal envelope insulation 12 inches (305 mm) or more wide shall bear the manufacturer's R-value identification mark. For building thermal insulation where no identification mark is used, the insulation installer shall provide a certification listing the type, manufacturer and R-value of insulation installed in each element of the building thermal envelope. In addition, the following information shall be provided by the installer on the certification:

1. For blown or sprayed insulation (fiberglass and cellulose), the initial installed thickness, settled thickness, settled R-value, installed density, coverage area and number of bags installed shall be listed on the certification.
2. For sprayed polyurethane foam (SPF) insulation, the installed thickness of the area covered and R-value of installed thickness shall be listed on the certificate.

The insulation installer shall sign, date and post the certificate in a conspicuous location on the job site.

N1101.4.1 Blown or sprayed roof/ceiling insulation. The thickness of blown in or sprayed roof/ceiling insulation (fiberglass or cellulose) shall be written in inches (mm) on markers that are installed at least one for every 300 ft^2 ($28m^2$) throughout the attic space. The markers shall be affixed to the trusses or joists and marked with the minimum initial installed thickness with numbers a minimum of 1 inch (25 mm) high. Each marker shall face the attic access opening. Spray polyurethane foam thickness and installed R-value shall be listed on the certificate provided by the insulation installer.

N1101.4.2 Insulation mark installation. Insulating materials shall be installed such that the manufacturer's R-value mark is readily observable upon inspection.

N1101.5 Fenestration product rating. Fenestration products (windows, doors and skylights) shall bear a label and certification from the manufacturer that the product has been tested by an accredited independent laboratory and that the testing determined that the U-factors are in accordance with NFRC 100. Products lacking such a labeled U-factor shall be assigned a default U-factor from Tables N1101.5(1) and N1101.5(2).

TABLE N1101.5(1)
DEFAULT GLAZED FENESTRATION U-FACTORS

FRAME TYPE	SINGLE PANE	DOUBLE PANE	SKYLIGHT	
			Single	Double
Metal	1.2	0.8	2	1.3
Metal with thermal break	1.1	0.65	1.9	1.1
Nonmetal or metal clad	0.95	0.55	1.75	1.05
Glazed block	0.6			

TABLE N1101.5(2)
DEFAULT DOOR U-FACTORS

DOOR TYPE	U-FACTOR
Uninsulated metal	1.2
Insulated metal	0.6

Wood	0.5
Insulated, nonmetal edge, max 45% glazing, any glazing double pane	0.35

N1101.6 Insulation product rating. The thermal resistance (R-value) of insulation shall be determined in accordance with the 16 CFR 460 as in effect on March 1, 2011, in units of h • ft^2 • °F/Btu at a mean temperature of 75°F (24°C).

N1101.7 Installation. All materials, systems and equipment shall be installed in accordance with the manufacturer's installation instructions and the provisions of this chapter.

N1101.7.1 Protection of exposed foundation insulation. Insulation applied to the exterior of basement walls, crawl space walls and the perimeter of slab-on-grade floors shall have a rigid, opaque and weather-resistant protective covering to prevent the degradation of the insulation's thermal performance. The protective covering shall cover the exposed exterior insulation and extend a minimum of six (6) inches (152 mm) below grade.

N1101.8 Certificate. A permanent certificate shall be posted on or in the electrical distribution panel. The certificate shall not cover or obstruct the visibility of the circuit directory label, service disconnect label or other required labels. The certificate shall be completed by the builder or registered design professional. The certificate shall list the predominant R-values of insulation installed in or on ceiling/roof, walls, foundation (slab, basement wall, crawl space wall and/or floor), ducts outside conditioned spaces, and U-factors for fenestration. Where there is more than one value for each component, the certificate shall list the value covering the largest area. The certificate shall list the types and efficiencies of heating, cooling and service water heating equipment. Where a gas-fired unvented room heater, electric furnace, and/or baseboard electric heater is installed in the residence, the certificate shall list "gas-fired unvented room heater", "electric furnace", or "baseboard electric heater" as appropriate. An efficiency shall not be listed for gas-fired unvented room heaters, electric furnaces, or electric baseboard heaters.

SECTION N1102; BUILDING THERMAL ENVELOPE

N1102.1 Insulation and fenestration criteria. The building thermal envelope shall meet the requirements of Table N1102.1 based on the climate zone specified in Table N1101.2.

N1102.1.1 R-value computation. Insulation material used in layers, such as framing cavity insulation and insulating sheathing, shall be summed to compute the component R-value. The manufacturer's settled R-value shall be used for blown insulation. Computed R-values shall not include an R-value for other building materials or air films.

N1102.1.2 U-factor alternative. An assembly with a U-factor equal to or less than that specified in Table N1102.1.2 shall be permitted as an alternative to the R-value in Table N1102.1.

N1102.1.3 Total UA alternative. If the total building thermal envelope UA (sum of U-factor times assembly area) is less than or equal to the total UA resulting from using the U-factors in Table N1102.1.2 (multiplied by the same assembly area as in the proposed building), the building shall be considered in compliance with Table N1102.1. The UA calculation shall be done using a method in accordance with the Indiana Energy Conservation Code, 675 IAC 19-4, and shall include the thermal bridging effects of framing materials. Calculation procedures used to comply with this section shall be by use of approved computer software tools capable of calculating the total building thermal envelope UA that differs between "standard reference design" and the proposed design. REScheck, from the US Department of Energy, is an example of an approved software tool.

TABLE N1102.1

INSULATION AND FENESTRATION REQUIREMENTS BY COMPONENT [a]

CLIMATE ZONE	FENESTRATION U-FACTOR	SKYLIGHT U-FACTOR[b]	CEILING R-VALUE	WOOD FRAME R-VAULE *[sic]*	MASS WALL R-VALUE [g]	FLOOR R-VALUE	BASEMENT WALL R-VALUE[c]	SLAB R-VALUE AND DEPTH[d]	CRAWL SPACE R-VALUE
4	0.35	0.60	38	13	5/10	19	10/13	10; 2 ft	10/13
5	0.35	0.60	38	20 or 13 + 5 [f]	13/17	30 [e]	10/13	10; 2 ft	10/13

a. R-values are minimums. U-factors are maximums. R-19 batts compressed in to a nominal 2 × 6 framing cavity such that the R-value is reduced by R-1 or more shall be marked with the compressed batt R-value in addition to the full thickness R-value.

b. The fenestration U-factor column excludes skylights.

c. The first R-value applies to continuous insulation, the second to framing cavity insulation; either insulation meets the requirement.

d. R-5 shall be added to the required slab edge R-values for heated slabs.

e. Or insulation sufficient to fill the framing cavity, R-19 minimum.

f. "13+5" means R-13 cavity insulation plus R-5 insulated sheathing. If structural sheathing covers 25% or less of the exterior, R-5 sheathing is not required where structural sheathing is used. If structural sheathing covers more than 25% of exterior, structural sheathing shall be supplemented with insulated sheathing of at least R-2.

g. The second R-value applies when more than half the insulation is on the interior.

TABLE N1102.1.2

EQUIVALENT U-FACTORS [a]

CLIMATE ZONE	FENESTRATION U-FACTOR	SKYLIGHT U-FACTOR	CEILING U-FACTOR	FRAME WALL U-FACTOR	MASS WALL U-FACTOR [b]	FLOOR U-FACTOR	BASEMENT WALL U-FACTOR	CRAWL SPACE WALL U-FACTOR
4	0.35	0.60	0.030	0.082	0.141	0.047	0.059	0.065
5	0.35	0.60	0.030	0.057	0.082	0.033	0.059	0.065

a. Nonfenestration U-factors shall be obtained from measurement, calculation or an approved source.

b. When more than half the insulation is on the interior, the mass wall U-factors shall be a maximum of 0.10 in zone 4 and the same as the frame wall U-factor (0.057) in zone 5.

N1102.2 Specific insulation requirements.

N1102.2.1 Ceilings with attic spaces. When Section N1102.1 would require R-38 in the ceiling, R-30 shall be deemed to satisfy the requirement for R-38 wherever the full height of uncompressed R-30 insulation extends over the wall top plate at the eaves. Similarly R-38 shall be deemed to satisfy the requirement for R-49 wherever the full height of uncompressed R-38 insulation extends over the wall top plate at the eaves. This reduction shall not apply to the U-factor alternative approach in Section N1102.1.2 and the Total UA alternative in Section N1102.1.3.

N1102.2.2 Ceilings without attic spaces. Where Section N1102.1 would require insulation levels above R-30 and the design of the roof/ceiling assembly does not allow sufficient space for the required insulation, the minimum required insulation for such roof/ceiling assemblies shall be R-30. This reduction of insulation from the requirements of N1102.1 shall be limited to five hundred (500) square feet (46 m^2) or twenty (20) percent of the total insulated ceiling area, whichever is less. This reduction shall not apply to the U-factor alternative approach in Section N1102.1.2 and the Total UA alternative in Section N1102.1.3.

N1102.2.3 Access hatches and doors. Access hatches from conditioned spaces to unconditioned spaces (e.g., attics and crawl spaces) shall be weatherstripped and insulated to a level equivalent to the insulation on the surrounding surfaces. Access shall be provided to all equipment which prevents damaging or compressing the insulation. A wood framed or equivalent baffle or retainer is required to be provided when loose fill insulation is installed, the purpose of which is to prevent the loose fill insulation from spilling into the living space when the attic access is opened and to provide a permanent means of maintaining the installed R-value of the loose fill insulation.

N1102.2.4 Mass walls. Mass walls, for the purposes of this chapter, shall be considered above-grade walls of concrete block, concrete, insulated concrete form (ICF), masonry cavity, brick (other than brick veneer), earth (adobe, compressed earth block, rammed earth) and solid timber/logs.

N1102.2.5 Steel-frame ceilings, walls and floors. Steel frame ceilings, walls and floors shall meet the insulation requirements of Table N1102.2.5 or shall meet the U-factor requirements in Table N1102.1.2. The calculation of the U-factor for a steel-frame envelope assembly shall use a series-parallel path calculation method.

TABLE N1102.2.5

STEEL-FRAME CEILING, WALL AND FLOOR INSULATION (R-VALUE)

WOOD FRAME R-VALUE REQUIREMENT	COLD-FORMED STEEL EQUIVALENT R-VALUE [a]
Steel Truss Ceilings [a]	

R-30	R-38 or R-30 + 3 or R-26 + 5
R-38	R-49 or R-38 + 3
R-49	R-38 + 5
Steel Joist Ceilings [b]	
R-30	R-38 in 2 × 4 or 2 × 6 or 2 × 8; R-49 in any framing
R-38	R-49 in 2 × 4 or 2 × 6 or 2 × 8 or 2 × 10
Steel Framed Wall	
R-13	R-13 + 5 or R-15 + 4 or R-21 + 3 or R-0 + 10
R-19	R-13 + 9 or R-19 + 8 or R-25 + 7
R-21	R-13 +10 or R-19 + 9 or R-25 + 8
Steel Joist Floor	
R-13	R-19 in 2 × 6 or R-19 + R-6 in 2 × 8 or 2 × 10
R-19	R-19 + R-6 in 2 × 6 or R-19 + R-12 in 2 × 8 or 2 × 10

For SI: 1 inch = 25.4 mm.

a. Cavity insulation R-value is listed first, followed by continuous insulation R-value.

b. Insulation exceeding the height of the framing shall cover the framing.

N1102.2.6 Floors. Floor insulation shall be installed to maintain permanent contact with the underside of the subfloor decking.

N1102.2.7 Basement walls. Exterior walls associated with conditioned basements shall be insulated from the top of the basement wall down to ten (10) feet (3048 mm) below grade or to the basement floor, whichever is less. Walls associated with unconditioned basements shall meet this requirement unless the floor overhead is insulated in accordance with Sections N1102.1 and N1102.2.5.

N1102.2.8 Slab-on-grade floors. Slab-on-grade floors with a floor surface less than twelve (12) inches below grade shall be insulated in accordance with Table N1102.1. The insulation shall extend downward from the top of the slab on the outside or inside of the foundation wall. Insulation located below grade shall be extended the distance provided in Table N1102.1 by any combination of vertical insulation, insulation extending under the slab or insulation extending out from the building. Insulation extending away from the building shall be protected by pavement or by a minimum of ten (10) inches (254 mm) of soil. The top edge of the insulation installed between the exterior wall and the edge of the interior slab shall be permitted to be cut at a 45-degree (0.79 rad) angle away from the exterior wall.

N1102.2.9 Crawl space walls. As an alternative to insulating floors over crawl spaces, crawl space walls shall be permitted to be insulated when the crawl space is not vented to the outside. Crawl space wall insulation shall be permanently fastened to the wall and extend downward from the floor to the finished grade level and then vertically and/or horizontally for at least an additional twenty-four (24) inches (610 mm). Exposed earth in unvented crawl space foundations shall be covered with a continuous 0.1 perms or less vapor retarder. All joints of the vapor retarder shall overlap by six (6) inches (153 mm) and be sealed or taped. The edges of the vapor retarder shall extend at least six (6) inches (153 mm) up the stem wall and shall be attached to the stem wall.

N1102.2.10 Masonry veneer. Insulation shall not be required on the horizontal portion of the foundation that supports a masonry veneer.

N1102.2.11 Thermally isolated sunroom insulation. The minimum ceiling insulation R-values shall be R-19 in zone 4 and R-24 in zone 5. The minimum wall R-value shall be R-13 in all zones. New wall(s) separating the sunroom from conditioned space shall meet the building thermal envelope requirements.

N1102.3 Fenestration.

N1102.3.1 U-factor. An area-weighted average of fenestration products shall be permitted to satisfy the U-factor requirements.

N1102.3.2 Glazed fenestration exemption. Up to fifteen (15) square feet (1.4m^2) of glazed fenestration per dwelling unit shall be permitted to be exempt from U-factor in Section N1102.1. This exemption shall not apply to the U-factor alternative approach in Section N1102.1.2 and the Total UA alternative in Section N1102.1.3.

N1102.3.3 Opaque door exemption. One side-hinged opaque door assembly up to twenty-four (24) square feet (2.22 m^2) in area is exempted from the U-factor requirement in Section N1102.1. This exemption shall not apply to the U-factor alternative approach in Section N1102.1.2 and the Total UA alternative in Section N1102.1.3.

N1102.3.4 Thermally isolated sunroom U-factor. For zones 4 and 5, the maximum fenestration U-factor shall be 0.50 and the maximum skylight U-factor shall be 0.75. New windows and doors separating the sunroom from conditioned space shall meet the building thermal envelope requirements.

N1102.3.5 Replacement fenestration. Where some or all of an existing fenestration unit is replaced with a new fenestration product, including sash and glazing, the replacement fenestration unit shall meet the applicable requirements for U-factor in Table N1102.1.

N1102.4 Air leakage.

N1102.4.1 Building thermal envelope. The building thermal envelope shall be durably sealed to limit infiltration. The sealing methods between dissimilar materials shall allow for differential expansion and contraction. The following shall be caulked, gasketed, weatherstripped or otherwise sealed with an air barrier material, suitable film or solid material.

1. All joints, seams and penetrations.
2. Site-built windows, doors and skylights.
3. Openings between window and door assemblies and their respective jambs and framing.
4. Utility penetrations.
5. Dropped ceilings or chases adjacent to the thermal envelope.
6. Knee walls.
7. Walls and ceilings separating the garage from conditioned spaces.
8. Behind tubs and showers on exterior walls.
9. Common walls between dwelling units.
10. Attic access openings.
11. Rim joists junction.
12. Other sources of infiltration.

N1102.4.2 Air sealing and insulation. Building envelope, air tightness and insulation installation shall be demonstrated to comply with one of the following options given by Section N1102.4.2.1 or N1102.4.2.2.

TABLE N1102.4.2

AIR BARRIER AND INSULATION INSPECTION

COMPONENT	CRITERIA
Air barrier and thermal barrier	Exterior thermal envelope insulation for framed walls is installed in substantial contact and continuous alignment with building envelope air barrier. Breaks or joints in the air barrier are filled or repaired. Air-permeable insulation is not used as a sealing material. Air-permeable insulation is inside of an air barrier.
Ceiling/attic	Air barrier in any dropped ceiling/soffit is substantially aligned with insulation and any gaps are sealed. Attic access (except unvented attic), knee wall door, or drop down stair is sealed.
Walls	Corners and headers are insulated. Junction of foundation and sill plate is sealed.
Windows and doors	Space between window/door jambs and framing is sealed.
Rim joists	Rim joists are insulated and include an air barrier.
Floors (including above garage and cantilevered floors)	Insulation is installed to maintain permanent contact with underside of subfloor decking. Air barrier is installed at any exposed edge of floor.
Crawl space walls	Insulation is permanently attached to walls. Exposed earth in unvented crawl spaces is covered with Class I vapor retarder with overlapping joints taped.
Shafts, penetrations	Duct shafts, utility penetrations, knee walls and flue shafts opening to exterior or unconditioned space are sealed.
Narrow cavities	Batts in narrow cavities are cut to fit, or narrow cavities are filled by sprayed/blown insulation.

Garage separation	Air sealing is provided between the garage and conditioned spaces.
Recessed lighting	Recessed luminaries are airtight, IC rated and sealed to drywall. Exception – luminaries in conditioned space.
Plumbing and wiring	Insulation is placed between outside and pipes. Batt insulation is cut to fit around wiring and plumbing, or sprayed/blown insulation extends behind piping and wiring.
Shower/tub on exterior wall	Showers and tubs on exterior walls have insulation and an air barrier separating them from the exterior wall.
Electrical/phone box on exterior wall	Air barrier extends behind boxes or air sealed type boxes are installed.
Common wall	Air barrier is installed in common wall between dwelling units.
HVAC register boots	HVAC register boots that penetrate building envelope are sealed to subfloor or drywall.
Fireplace	Fireplace walls include an air barrier.

N1102.4.2.1 Testing option. Tested air leakage is less than 7 air changes per hour (ACH) when tested with a blower door at a pressure of 0.007 psi (50 pascals). Testing shall occur after rough in and after installation of penetrations of the building envelope, including penetrations for utilities, plumbing, electrical, ventilation and combustion appliances. During testing:

1. Exterior windows and doors, fireplace and stove doors shall be closed, but not sealed;
2. Dampers shall be closed, but not sealed, including exhaust, intake, makeup air, back draft, and flue dampers;
3. Interior doors shall be open;
4. Exterior openings for continuous ventilation systems and heat recovery ventilators shall be closed and sealed;
5. Heating and cooling system(s) shall be turned off;
6. HVAC ducts shall not be sealed; and
7. Supply and return registers shall not be sealed.

N1102.4.2.2 Visual inspection option. The items listed in Table N1102.4.2, applicable to the method of construction, are field verified. Where required by local ordinance, an approved party independent from the installer of the insulation, shall inspect the air barrier and insulation.

N1102.4.3 Fireplaces. New wood-burning fireplaces shall have gasketed doors and outdoor combustion air.

N1102.4.4 Fenestration air leakage. Windows, skylights and sliding glass doors shall have an air infiltration rate of no more than 0.3 cubic foot per minute per square foot [1.5(L/s)/m^2], and swinging doors no more than 0.5 cubic foot per minute per square foot [2.5(L/s)/m^2], when tested according to NFRC 400 or AAMA/WDMA/CSA101/I.S.2/A440 by an accredited, independent laboratory, and listed and labeled by the manufacturer.

Exception: Site-built windows, skylights and doors.

N1102.4.5 Recessed lighting. Recessed luminaries installed in the building thermal envelope shall be sealed to limit air leakage between conditioned and unconditioned spaces. All recessed luminaries shall be IC-rated and labeled as meeting ASTM E 283 when tested at 1.57 psi (75 Pa) pressure differential with no more than 2.0 cfm (0.944 L/s) of air movement from the conditioned space to the ceiling cavity. All recessed luminaries shall be sealed with a gasket or caulk between the housing and the interior of the wall or ceiling covering.

N1102.5 Maximum fenestration U-factor. The area-weighted average maximum fenestration U-factor permitted using trade-offs from Section N1102.1.3 shall be 0.48 in zones 4 and 5 for vertical fenestration and 0.75 in zones 4 and 5 for skylights.

SECTION N1103; SYSTEMS

N1103.1 Controls. At least one thermostat shall be installed for each separate heating and cooling system.

N1103.1.1 Programmable thermostat. Where the primary heating system is a forced air furnace, at least one thermostat per dwelling unit shall be capable of controlling the heating and cooling system on a daily schedule to maintain different temperature set points at different times of the day. This thermostat shall include the capability to set back or temporarily operate the system to maintain zone temperatures down to 55°F (13°C) or up to 85°F (29°C). The thermostat shall initially be programmed with a heating temperature set point no higher than 70°F (21°C) and a cooling temperature set point no lower than 78°F (26°C).

N1103.1.2 Heat pump supplementary heat. Heat pumps having supplementary electric-resistance heat shall have controls

that, except during defrost, prevent supplemental heat operation when the heat pump compressor can meet the heating load.

N1103.2 Ducts.

N1103.2.1 Insulation. Supply ducts in attics shall be insulated to a minimum of R-8. All other ducts shall be insulated to a minimum of R-6.

Exception: Ducts or portions thereof located completely inside the building thermal envelope.

N1103.2.2 Sealing. Ducts, air handlers, filter boxes and building cavities used as ducts shall be sealed. Joints and seams shall comply with Section M1601.3.1 of this code. Duct tightness shall be verified by either of the following:

1. Post-construction test: Leakage to outdoors shall be less than or equal to eight (8) cfm (3.78 L/s) per one hundred (100) ft^2 (9.29 m^2) of conditioned floor area or a total leakage less than or equal to twelve (12) cfm (5.66 L/s) per one hundred (100) ft^2 (9.29 m^2) of conditioned floor area when tested at a pressure differential of 0.1 inch w.g. (25 Pa) across the entire system, including the manufacturer's air handler end closure. All register boots shall be taped or otherwise sealed during the test.

2. Rough-in test: Total leakage shall be less than or equal to six (6) cfm (2.83 L/s) per one hundred (100) ft^2 (9.29 m^2) of conditioned floor area when tested at a pressure differential of 0.1 inch w.g. (25 Pa) across the roughed in system, including the manufacturer's air handler enclosure. All register boots shall be taped or otherwise sealed during the test. If the air handler is not installed at the time of the test, total leakage shall be less than or equal to four (4) cfm (1.89 L/s) per one hundred (100) ft^2 (9.29 m^2) of conditioned floor area.

Exception: Duct tightness test is not required if the air handler and all ducts are located within conditioned space.

N1103.2.3 Building cavities. Building framing cavities shall not be used as supply ducts.

N1103.3 Mechanical system piping insulation. Mechanical system piping capable of carrying fluids above 105°F (40°C) or below 55°F (13°C) shall be insulated to a minimum of R-3.

N1103.4 Circulating hot water systems. All circulating service hot water piping shall be insulated to at least R-2. Circulating hot water systems shall include an automatic or readily accessible manual switch that can turn off the hot water circulating pump when the system is not in use.

N1103.5 Mechanical ventilation. Outdoor air intakes and exhausts shall have automatic or gravity dampers that close when the ventilation system is not operating.

N1103.6 Equipment sizing. Heating and cooling equipment shall be sized as specified in Section M1401.3 of this code.

N1103.7 Snow-melt system controls. Snow- and ice-melting systems, supplied through energy service to the building, shall include automatic controls capable of shutting off the system when the pavement temperature is above 50°F (10°C) and no precipitation is falling and an automatic or manual control that will allow shutoff when the outdoor temperature is above 40°F (4°C).

N1103.8 Pools. Pools shall be provided with energy conserving measures in accordance with Sections N1103.8.1 through N1103.8.3.

N1103.8.1 Pool heaters. All pool heaters shall be equipped with a readily accessible on-off switch to allow shutting off the heater without adjusting the thermostat setting. Pool heaters fired by natural gas or LPG shall not have continuously burning pilot lights.

N1103.8.2 Time switches. Time switches that can automatically turn off and on heaters and pumps according to a pre-set schedule shall be installed on swimming pool heaters and pumps.

Exceptions:

1. Where public health standards require 24-hour pump operation.
2. Where pumps are required to operate solar-and-waste-heat-recovery pool heating systems.

N1103.8.3 Pool covers. Heated pools shall be equipped with a vapor retardant pool cover on or at the water surface. Pools heated to more than 90°F (32°C) shall have a pool cover with a minimum insulation value of R-12.

Exception: Pools deriving over sixty (60) percent of the energy for heating from site-recovered energy or solar energy source.

SECTION N1104; LIGHTING SYSTEMS

N1104.1 Lighting equipment. (a) A minimum of fifty (50) percent of the lamps in permanently installed lighting fixtures shall be high-efficacy lamps.

(b) For purposes of this section, high-efficacy lamps mean compact fluorescent lamps, T-8 or smaller diameter linear fluorescent lamps or lamps with a minimum efficacy of:

i. 60 lumens per watt for lamps over 40 watts.

ii. 50 lumens per watt for lamps over 15 watts to 40 watts.

iii. 40 lumens per watt for lamps 15 watts or less.

SECTION N1105; REFERENCED STANDARDS

N1105.1 For purposes of this chapter, the following referenced standards are applicable:

(a) AAMA/WDMA/CSA 101/I.S.2/A440-08; American Architectural Manufacturers Association, 1827 Walden Office Square, 550, Schaumburg, IL 60173.

(b) ASTM E 283-04; ASTM International, 100 Barr Harbor Drive, West Conshohocken, PA 19428.

(c) NFRC 100-2004; National Fenestration Rating Council, Inc., 8484 Georgia Avenue, Suite 320, Silver Spring, MD 20910. The edition of the documents listed in Chapter 6 for which no edition date is shown shall be the edition which was in effect on January 1, 2004.

(d) NFRC 400-2004; National Fenestration Rating Council, Inc., 8484 Georgia Avenue, Suite 320, Silver Spring, MD 20910.

N1106 PERFORMANCE BASED CALCULATIONS

(1) Chapter 4 of that certain document being titled International Energy Conservation Code, 2009 Edition, first printing, as published by the International Code Council, 4051 Flossmoor Road, Country Club Hills, Illinois 60478, is hereby adopted by reference as if fully set out in this rule save and except those revisions made in this rule.

(2) The purpose of adopting Section N1106 is to provide a performance based alternative in lieu of compliance with the prescriptive requirements of Chapter 11 of the 2005 Indiana Residential Code.

(3) Amend Chapter 4 as follows:

(i) Amend Section 401.1, delete "residential buildings" and insert "Class 2 structures".

(ii) In Section 401.2, delete text and insert as follows: Projects may comply with Section 405 Simulated Performance Alternative (performance).

(iii) Delete Section 401.3 in its entirety without substitution.

(iv) Add new Section 401.4 Definitions. The following definitions apply only to this section:

BUILDING THERMAL ENVELOPE. The basement walls, exterior walls, floor, roof, and any other building element that enclose conditioned space. This boundary also includes the boundary between conditioned space and any exempt or unconditioned space.

CODE OFFICIAL. See BUILDING OFFICIAL.

(v) Amend Table 402.1.1 as follows:

(A) In footnote f, delete "in warm-humid locations as defined by Figure 301.1 and Table 301.1".

(B) Delete footnote j without substitution.

(vi) Amend Section 402.1.1 to delete "Chapter 3" and insert "Table N1101.2 of the 2005 Indiana Residential Code".

(vii) Amend Table 402.1.3 footnote c to delete "in warm-humid locations as defined by Figure 301.1 and Table 301.1".

(viii) Delete Section 402.1.4 in its entirety without substitution.

(ix) Delete Section 402.2 in its entirety without substitution.

(x) Delete Section 402.3 in its entirety without substitution.

(xi) Delete Section 402.4 in its entirety without substitution.

(xii) Delete Table 402.4.2 in its entirety without substitution.

(xiii) Delete Section 402.5 in its entirety without substitution.

(xiv) Delete Section 403.1 in its entirety without substitution.

(xv) Delete Section 403.2.3 in its entirety without substitution.

(xvi) Delete Section 403.3 in its entirety without substitution.

(xvii) Delete Section 403.4 in its entirety without substitution.

(xviii) Delete Section 403.5 in its entirety without substitution.

(xix) Delete Section 403.6 in its entirety without substitution.

(xx) Delete Section 403.7 in its entirety without substitution.

(xxi) Delete Section 403.8 in its entirety without substitution.
(xxii) Delete Section 403.9 in its entirety without substitution.
(xxiii) Delete Section 404 in its entirety without substitution.
(xxiv) Amend Section 405.3 to delete the last sentence before the exception.
(xxv) Amend Section 405.4.3 to delete the first sentence and insert "The following documents shall be furnished to the code official upon request:".
(xxvi) Amend Table 405.5.2(1) as follows:
(A) In footnote b, delete ", R-2 and R-4 residences".
(B) In footnote d, delete "in accordance with Section 5.1 of AHSRAE 119" and insert "as the equivalent amount of open area (assuming unit discharge coefficient) that would let pass the same quantity of air as would pass collectively through the building envelope at a reference pressure of 4 Pa (ft^2) (m^2)."
(C) In footnote e, in the first sentence, after "code official" insert ", where required by local ordinance".
(D) In footnote f, insert ", or other approved method," after "page 26.24" and after "page 26.19".
(E) Delete footnotes i, j, and k without substitution.
(xxvii) Amend Section 405.6.1 to delete "International" in item 2 and insert "Indiana".
(xxviii) Amend Section 405.6.2 to delete the last two sentences.
(Fire Prevention and Building Safety Commission; 675 IAC 14-4.3-139.1; filed Jan 6, 2012, 10:25 a.m.: 20120201-IR-675110084FRA, eff 90 days after filing with the Publisher)

675 IAC 14-4.3-140 Section M1201.1; scope
Authority: IC 22-13-2-2; IC 22-13-2-13
Affected: IC 22-12; IC 22-13; IC 22-14; IC 22-15; IC 36-7

Sec. 140. Change SECTION M1201.1 to read as follows: The provisions of Chapters 1, 2, and 12 through 24 shall regulate the design, installation, and alteration of any part of the permanent heating, ventilating, and air conditioning for a Class 1 structure-townhouse or a Class 2 structure-1 or 2 family dwelling. *(Fire Prevention and Building Safety Commission; 675 IAC 14-4.3-140; filed Jun 13, 2005, 3:00 p.m.: 28 IR 3289, eff 90 days after filing with the Secretary of State; readopted filed Aug 4, 2011, 8:35 a.m.: 20110831-IR-675110254RFA)*

675 IAC 14-4.3-141 Section M1201.2; application
Authority: IC 22-13-2-2; IC 22-13-2-13
Affected: IC 22-12; IC 22-13; IC 22-14; IC 22-15; IC 36-7

Sec. 141. Delete SECTION M1201.2. *(Fire Prevention and Building Safety Commission; 675 IAC 14-4.3-141; filed Jun 13, 2005, 3:00 p.m.: 28 IR 3289, eff 90 days after filing with the Secretary of State; readopted filed Aug 4, 2011, 8:35 a.m.: 20110831-IR-675110254RFA)*

675 IAC 14-4.3-142 Section M1202; existing mechanical systems
Authority: IC 22-13-2-2; IC 22-13-2-13
Affected: IC 22-12; IC 22-13; IC 22-14; IC 22-15; IC 36-7

Sec. 142. Delete SECTION M1202 and substitute to read as follows: For existing installations see Chapter 1 and the General Administrative Rules (675 IAC 12). *(Fire Prevention and Building Safety Commission; 675 IAC 14-4.3-142; filed Jun 13, 2005, 3:00 p.m.: 28 IR 3289, eff 90 days after filing with the Secretary of State; readopted filed Aug 4, 2011, 8:35 a.m.: 20110831-IR-675110254RFA)*

675 IAC 14-4.3-143 Section M1303.1; label information
Authority: IC 22-13-2-2; IC 22-13-2-13
Affected: IC 22-12; IC 22-13; IC 22-14; IC 22-15; IC 36-7

Sec. 143. Change, in SECTION M1303.1, Item 4, "approval" to "acceptance". *(Fire Prevention and Building Safety Commission; 675 IAC 14-4.3-143; filed Jun 13, 2005, 3:00 p.m.: 28 IR 3289, eff 90 days after filing with the Secretary of State; readopted filed Aug 4, 2011, 8:35 a.m.: 20110831-IR-675110254RFA)*

675 IAC 14-4.3-143.5 Section M1305.1.3; appliances in attics

Authority: IC 22-13-2-2; IC 22-13-2-13
Affected: IC 22-12; IC 22-13; IC 22-14; IC 22-15; IC 36-7

Sec. 143.5. Change Section M1305.1.3 to read as follows:

(1) In Section M1305.1.3, add a second exception to read as follows: 2. Where the passageway is unobstructed and not less than 6 feet (1,829 mm) high and 22 inches (559 mm) wide for its entire length, the passageway shall not be more than 50 feet (15.25 m) long.

(2) Change Section M1305.1.3.1 to read as follows: A luminaire controlled by a switch located at the required passageway opening and a receptacle outlet shall be provided at or near the appliance location in accordance with Chapter 38.

(3) In Section M1305.1.4, add a second exception to read as follows: 2. Where the passageway is unobstructed and not less than 6 feet (1,829 mm) high and 22 inches (559 mm) wide for its entire length, the passageway shall not be limited in length.

(4) Change Section M1305.1.4.3 to read as follows: A luminaire controlled by a switch located at the required passageway opening and a receptacle outlet shall be provided at or near the appliance location in accordance with Chapter 38.

(Fire Prevention and Building Safety Commission; 675 IAC 14-4.3-143.5; filed Mar 6, 2008, 11:13 a.m.: 20080402-IR-675070483FRA; readopted filed Aug 4, 2011, 8:35 a.m.: 20110831-IR-675110254RFA)

675 IAC 14-4.3-144 Section M1307.3.1; protection from impact

Authority: IC 22-13-2-2; IC 22-13-2-13
Affected: IC 22-12; IC 22-13; IC 22-14; IC 22-15; IC 36-7

Sec. 144. Change the title and text of Section M1307.3.1 to read as follows: M1307.3.1 Isolation from corrugated stainless steel tubing. Except where connected to gas supply piping, appliances shall be isolated from corrugated stainless steel tubing by a space separation of at least 2 inches (51 mm). See also Section G2411.1. *(Fire Prevention and Building Safety Commission; 675 IAC 14-4.3-144; filed Jun 13, 2005, 3:00 p.m.: 28 IR 3289, eff 90 days after filing with the Secretary of State; filed Mar 6, 2008, 11:13 a.m.: 20080402-IR-675070483FRA; readopted filed Aug 4, 2011, 8:35 a.m.: 20110831-IR-675110254RFA)*

675 IAC 14-4.3-144.5 Section M1308.3; foundations and supports

Authority: IC 22-13-2-2; IC 22-13-2-13
Affected: IC 22-12; IC 22-13; IC 22-14; IC 22-15; IC 36-7

Sec. 144.5. Add a title and the text of Section M1308.3 to read as follows: M1308.3 Foundations and supports. Foundations and supports for outdoor mechanical systems shall be raised at least 1 1/2 inches (38.25 mm) above the finished grade and shall also conform to manufacturer's installation instructions. *(Fire Prevention and Building Safety Commission; 675 IAC 14-4.3-144.5; filed Mar 6, 2008, 11:13 a.m.: 20080402-IR-675070483FRA; readopted filed Aug 4, 2011, 8:35 a.m.: 20110831-IR-675110254RFA)*

675 IAC 14-4.3-144.6 Section M1406.2; clearances

Authority: IC 22-13-2-2; IC 22-13-2-13
Affected: IC 22-12; IC 22-13; IC 22-14; IC 22-15; IC 36-7

Sec. 144.6. Change Section M1406.2 to read as follows: Clearances for radiant heating panels or elements to any wiring, outlet boxes, and junction boxes used for installing electrical devices or mounting luminaires shall comply with Chapters 33 through 42 of this code. *(Fire Prevention and Building Safety Commission; 675 IAC 14-4.3-144.6; filed Mar 6, 2008, 11:13 a.m.: 20080402-IR-675070483FRA; readopted filed Aug 4, 2011, 8:35 a.m.: 20110831-IR-675110254RFA)*

675 IAC 14-4.3-144.7 Section M1410.1; general

Authority: IC 22-13-2-2; IC 22-13-2-13
Affected: IC 22-12; IC 22-13; IC 22-14; IC 22-15; IC 36-7

Sec. 144.7. Change Section M1410.1 to read as follows: Vented room heaters shall be tested in accordance with ASTM E 1509, UL 1482, or UL 896 and installed in accordance with their listing, the manufacturer's installation instructions, and the requirements of this code. *(Fire Prevention and Building Safety Commission; 675 IAC 14-4.3-144.7; filed Mar 6, 2008, 11:13 a.m.: 20080402-IR-675070483FRA; readopted filed Aug 4, 2011, 8:35 a.m.: 20110831-IR-675110254RFA)*

675 IAC 14-4.3-145 Section M1411.3.1; auxiliary and secondary drain systems

Authority: IC 22-13-2-2; IC 22-13-2-13
Affected: IC 22-12; IC 22-13; IC 22-14; IC 22-15; IC 36-7

Sec. 145. (a) In the first sentence of Section M1411.3.1, delete "damage to any building components will occur as a result of overflow from the equipment drain pan or stoppage in the condensate drain piping" and insert "installed over a finished ceiling".

(b) Add a sentence immediately after the next to last sentence of Section M1411.3.1 to read as follows: Such piping shall maintain a minimum horizontal slope in the direction of discharge of not less than 1/8 unit vertical in 12 units horizontal (1-percent slope).

(c) In the second sentence of Section M1411.3.1, item 3, add the phrase "conforming to UL 508" after "water level detection device."

(d) Add item 4 to Section M1411.3.1 to read as follows: 4. A water detection device conforming to UL 508 shall be provided that will shut off the equipment served in the event that the primary drain is blocked. The device shall be installed in the primary drain line, the overflow drain line or the equipment-supplied drain pan and shall be located at a point higher than the primary drain line connection and below the overflow rim of such pan.

(e) Add an exception to the end of Section M1411.3.1to read as follows: Exception: When installed on a water-resistant floor with a floor drain in the same room or space. *(Fire Prevention and Building Safety Commission; 675 IAC 14-4.3-145; filed Jun 13, 2005, 3:00 p.m.: 28 IR 3289, eff 90 days after filing with the Secretary of State; filed Mar 6, 2008, 11:13 a.m.: 20080402-IR-675070483FRA; readopted filed Aug 4, 2011, 8:35 a.m.: 20110831-IR-675110254RFA)*

675 IAC 14-4.3-145.5 Section M1411.4; insulation of refrigerant piping

Authority: IC 22-13-2-2; IC 22-13-2-13
Affected: IC 22-12; IC 22-13; IC 22-14; IC 22-15; IC 36-7

Sec. 145.5. Change Section M1411.4 as follows:

(1) Change the number of Section M1411.4 to read as follows: Section M1411.5 insulation of refrigerant piping.

(2) Add Section M1411.4 to read as follows: M1411.4 auxiliary drain pan. Category IV condensing appliances shall have an auxiliary drain pan when installed over a finished ceiling. These pans shall be installed in accordance with the applicable provisions of Section M1411.3.

Exception: Fuel-fired appliances that automatically shut down operation in the event of a stoppage in the condensate drainage system.

(Fire Prevention and Building Safety Commission; 675 IAC 14-4.3-145.5; filed Mar 6, 2008, 11:13 a.m.: 20080402-IR-675070483FRA; readopted filed Aug 4, 2011, 8:35 a.m.: 20110831-IR-675110254RFA)

675 IAC 14-4.3-146 Section M1501.3; length limitation

Authority: IC 22-13-2-2; IC 22-13-2-13
Affected: IC 22-12; IC 22-13; IC 22-14; IC 22-15; IC 36-7

Sec. 146. Change, in the first sentence of SECTION M1501.3, "25 feet (7,620 mm)" to read "35 feet". *(Fire Prevention and Building Safety Commission; 675 IAC 14-4.3-146; filed Jun 13, 2005, 3:00 p.m.: 28 IR 3290, eff 90 days after filing with the*

Secretary of State; readopted filed Aug 4, 2011, 8:35 a.m.: 20110831-IR-675110254RFA)

675 IAC 14-4.3-146.3 Section M1601.3.6; duct separation

Authority: IC 22-13-2-2; IC 22-13-2-13
Affected: IC 22-12; IC 22-13; IC 22-14; IC 22-15; IC 36-7

Sec. 146.3. Add two (2) sentences to the end of Section M1601.3.6 to read as follows: Metal ducts and ducts containing metal shall be isolated from corrugated stainless steel tubing by a space separation of at least 2 inches (51 mm). See also Section G2411.1. *(Fire Prevention and Building Safety Commission; 675 IAC 14-4.3-146.3; filed Mar 6, 2008, 11:13 a.m.: 20080402-IR-675070483FRA; readopted filed Aug 4, 2011, 8:35 a.m.: 20110831-IR-675110254RFA)*

675 IAC 14-4.3-146.5 Section M1703.2.1; size of openings

Authority: IC 22-13-2-2; IC 22-13-2-13
Affected: IC 22-12; IC 22-13; IC 22-14; IC 22-15; IC 36-7

Sec. 146.5. Change the first sentence of M1703.2.1 to read as follows: Where directly communicating with the outdoors, or where communicating with the outdoors by means of vertical ducts, each opening shall have a free area of at least 1 square inch per 4,000 Btu/h of total input rating of all appliances in the space. *(Fire Prevention and Building Safety Commission; 675 IAC 14-4.3-146.5; filed Mar 6, 2008, 11:13 a.m.: 20080402-IR-675070483FRA; readopted filed Aug 4, 2011, 8:35 a.m.: 20110831-IR-675110254RFA)*

675 IAC 14-4.3-147 Section M2001.1; installation

Authority: IC 22-13-2-2; IC 22-13-2-13
Affected: IC 22-12; IC 22-13-2-9; IC 22-14; IC 22-15; IC 36-7

Sec. 147. Add SECTION M2001.1.2 to the end of SECTION M2001 to read as follows: Boilers and water heaters regulated by the Boiler and Pressure Vessel Rules Board (680 IAC 2) under IC 22-13-2-9 are not regulated by this code. *(Fire Prevention and Building Safety Commission; 675 IAC 14-4.3-147; filed Jun 13, 2005, 3:00 p.m.: 28 IR 3290, eff 90 days after filing with the Secretary of State; readopted filed Aug 4, 2011, 8:35 a.m.: 20110831-IR-675110254RFA)*

675 IAC 14-4.3-148 Section M2005.5; anchorage of water heaters

Authority: IC 22-13-2-2; IC 22-13-2-13
Affected: IC 22-12; IC 22-13; IC 22-14; IC 22-15; IC 36-7

Sec. 148. Add Section M2005.5 to the end of Section M2005 to read as follows: M2005.5 Anchorage of Water Heaters in Seismic Design Category C_1. In seismic design category C_1, water heaters shall be anchored or fastened to resist horizontal displacement due to earthquake motion as provided in Section M1307.2. *(Fire Prevention and Building Safety Commission; 675 IAC 14-4.3-148; filed Jun 13, 2005, 3:00 p.m.: 28 IR 3290, eff 90 days after filing with the Secretary of State; filed Mar 6, 2008, 11:13 a.m.: 20080402-IR-675070483FRA; readopted filed Aug 4, 2011, 8:35 a.m.: 20110831-IR-675110254RFA)*

675 IAC 14-4.3-148.5 Section M2101.5; contact with building material

Authority: IC 22-13-2-2; IC 22-13-2-13
Affected: IC 22-12; IC 22-13; IC 22-14; IC 22-15; IC 36-7

Sec. 148.5. Add two (2) sentences to the end of Section M2101.5 to read as follows: Metal hydronic piping shall be isolated from corrugated stainless steel tubing by a space separation of at least 2 inches (51 mm). See also Section G2411.1. *(Fire Prevention and Building Safety Commission; 675 IAC 14-4.3-148.5; filed Mar 6, 2008, 11:13 a.m.: 20080402-IR-675070483FRA; readopted filed Aug 4, 2011, 8:35 a.m.: 20110831-IR-675110254RFA)*

675 IAC 14-4.3-149 Section M2201.3; underground tanks

Authority: IC 22-13-2-2; IC 22-13-2-13
Affected: IC 22-12; IC 22-13; IC 22-14; IC 22-15; IC 36-7

Sec. 149. Delete SECTION M2201.3 and substitute to read as follows: Excavations for underground tanks shall not undermine the foundations of existing structures.

Underground tanks shall be set on firm foundations and surrounded with at least 6 inches (152.4 mm) of noncorrosive inert material, such as clean sand or gravel well-tamped in place or in accordance with the manufacturer's installation instructions. Tanks shall be covered with a minimum of 2 feet (609.6 mm) of earth or shall be covered by not less than 1 foot (304.8 mm) of earth, on top of which shall be placed a slab of reinforced concrete not less than 4 inches (101.6 mm) thick.

When underground tanks are, or are likely to be, subjected to traffic, they shall be protected against damage from vehicles passing over them by at least 3 feet (914.4 mm) of earth cover, or 18 inches (457.2 mm) of well-tamped earth plus 6 inches (152.4 mm) of reinforced concrete, or 8 inches (203.2 mm) of asphaltic concrete. When asphaltic or reinforced concrete paving is used as part of the protection, it shall extend at least 1 foot (304.8 mm) horizontally beyond the outline of the tank in all directions.

The clearance from the tank to the nearest wall of a basement, pit, or property line shall not be less than 1 foot (305 mm).

Corrosion protection shall be provided in accordance with SECTION M2203.7. *(Fire Prevention and Building Safety Commission; 675 IAC 14-4.3-149; filed Jun 13, 2005, 3:00 p.m.: 28 IR 3290, eff 90 days after filing with the Secretary of State; readopted filed Aug 4, 2011, 8:35 a.m.: 20110831-IR-675110254RFA)*

675 IAC 14-4.3-150 Section M2301.1; general

Authority: IC 22-13-2-2; IC 22-13-2-13
Affected: IC 22-12; IC 22-13; IC 22-14; IC 22-15; IC 36-7

Sec. 150. Change SECTION M2301.1 to read as follows: This section provides for the construction, installation, and alteration of equipment and systems utilizing solar energy to provide space heating or cooling and hot water heating. *(Fire Prevention and Building Safety Commission; 675 IAC 14-4.3-150; filed Jun 13, 2005, 3:00 p.m.: 28 IR 3290, eff 90 days after filing with the Secretary of State; readopted filed Aug 4, 2011, 8:35 a.m.: 20110831-IR-675110254RFA)*

675 IAC 14-4.3-151 Section G2401.1; application

Authority: IC 22-13-2-2; IC 22-13-2-13
Affected: IC 22-12; IC 22-13; IC 22-14; IC 22-15; IC 36-7

Sec. 151. (a) Delete the exception after the first paragraph of G2401.1 without substitution.

(b) Delete, in the second sentence of the second paragraph of Section G2401.1, ", inspection, operation, and maintenance" and add "and" before "testing" and delete the comma after "installation". *(Fire Prevention and Building Safety Commission; 675 IAC 14-4.3-151; filed Jun 13, 2005, 3:00 p.m.: 28 IR 3290, eff 90 days after filing with the Secretary of State; filed Mar 6, 2008, 11:13 a.m.: 20080402-IR-675070483FRA; readopted filed Aug 4, 2011, 8:35 a.m.: 20110831-IR-675110254RFA)*

675 IAC 14-4.3-152 Section G2403; general definitions

Authority: IC 22-13-2-2; IC 22-13-2-13
Affected: IC 22-12; IC 22-13-2-9; IC 22-14; IC 22-15; IC 36-7

Sec. 152. Change SECTION G2403 as follows: (a) Change the title to read as follows: SECTION G2403(202) GENERAL DEFINITIONS FOR THE PURPOSE OF CHAPTER 24 ONLY.

(b) Add to the end of the definition of BOILER, LOW PRESSURE as follows: This definition is not applicable to boilers regulated by the Boiler and Pressure Vessel Rules Board (680 IAC 2) under IC 22-13-2-9.

(c) Delete the definition of CODE.

(d) Delete the definition of CODE OFFICIAL and substitute to read as follows: See BUILDING OFFICIAL in SECTION R202.

(e) Delete the definition of HAZARDOUS LOCATION.

(f) Add, after "MODULATING", "NFPA 58. See 675 IAC 22-2.2-14".

(g) Add, after "UNIT HEATER", "UNUSUALLY TIGHT CONSTRUCTION. See SECTION R202". *(Fire Prevention and Building Safety Commission; 675 IAC 14-4.3-152; filed Jun 13, 2005, 3:00 p.m.: 28 IR 3290, eff 90 days after filing with the Secretary of State; readopted filed Aug 4, 2011, 8:35 a.m.: 20110831-IR-675110254RFA)*

675 IAC 14-4.3-153 Section G2404.7; flood hazard

Authority: IC 22-13-2-2; IC 22-13-2-13
Affected: IC 22-12; IC 22-13; IC 22-14; IC 22-15; IC 36-7

Sec. 153. Delete SECTION G2404.7 and substitute to read as follows: See local ordinance. *(Fire Prevention and Building Safety Commission; 675 IAC 14-4.3-153; filed Jun 13, 2005, 3:00 p.m.: 28 IR 3291, eff 90 days after filing with the Secretary of State; readopted filed Aug 4, 2011, 8:35 a.m.: 20110831-IR-675110254RFA)*

675 IAC 14-4.3-153.5 Section G2404.10; auxiliary and secondary drain systems

Authority: IC 22-13-2-2; IC 22-13-2-13
Affected: IC 22-12; IC 22-13; IC 22-14; IC 22-15; IC 36-7

Sec. 153.5. Add Section G2404.10 to read as follows: G2404.10 Auxiliary and secondary drain systems. Category IV condensing appliances shall be provided with an auxiliary drain pan when installed over a finished ceiling. Such pans shall be installed in accordance with the applicable provisions of Section M1411.

Exception: An auxiliary drain pan shall not be required for appliances that automatically shut down operation in the event of a stoppage in the condensate drainage system.

(Fire Prevention and Building Safety Commission; 675 IAC 14-4.3-153.5; filed Mar 6, 2008, 11:13 a.m.: 20080402-IR-675070483FRA; readopted filed Aug 4, 2011, 8:35 a.m.: 20110831-IR-675110254RFA)

675 IAC 14-4.3-154 Section G2405.1; structural safety

Authority: IC 22-13-2-2; IC 22-13-2-13
Affected: IC 22-12; IC 22-13; IC 22-14; IC 22-15; IC 36-7

Sec. 154. Delete, in the second sentence of SECTION G2405.1, "repairing" and substitute "altering". *(Fire Prevention and Building Safety Commission; 675 IAC 14-4.3-154; filed Jun 13, 2005, 3:00 p.m.: 28 IR 3291, eff 90 days after filing with the Secretary of State; readopted filed Aug 4, 2011, 8:35 a.m.: 20110831-IR-675110254RFA)*

675 IAC 14-4.3-154.5 Section G2405.3; engineered wood products

Authority: IC 22-13-2-2; IC 22-13-2-13
Affected: IC 22-12; IC 22-13; IC 22-14; IC 22-15; IC 36-7

Sec. 154.5. Add Section G2405.3 to read as follows: G2405.3 Engineered wood products. Cuts, notches, and holes bored in trusses, structural composite lumber, structural glued-laminated members, and I-joists are prohibited except where permitted by manufacturer's recommendations or except where the effects of such alterations are specifically considered in the design of the member by a registered design professional. *(Fire Prevention and Building Safety Commission; 675 IAC 14-4.3-154.5; filed Mar 6, 2008, 11:13 a.m.: 20080402-IR-675070483FRA; readopted filed Aug 4, 2011, 8:35 a.m.: 20110831-IR-675110254RFA)*

675 IAC 14-4.3-155 Section G2408.1; general

Authority: IC 22-13-2-2; IC 22-13-2-13
Affected: IC 22-12; IC 22-13; IC 22-14; IC 22-15; IC 36-7

Sec. 155. Make the following changes to SECTION G2408.1: (a) Delete, at the end of the second sentence, "at the time of

inspection".

(b) Delete, at the end of the second paragraph, "and the requirements determined by the code official".

(c) In the second paragraph, add "and" after "instructions" and before "the". *(Fire Prevention and Building Safety Commission; 675 IAC 14-4.3-155; filed Jun 13, 2005, 3:00 p.m.: 28 IR 3291, eff 90 days after filing with the Secretary of State; readopted filed Aug 4, 2011, 8:35 a.m.: 20110831-IR-675110254RFA)*

675 IAC 14-4.3-155.5 Section G2411.1; gas pipe bonding

Authority: IC 22-13-2-2; IC 22-13-2-13
Affected: IC 22-12; IC 22-13; IC 22-14; IC 22-15; IC 36-7

Sec. 155.5. Delete the text of Section G2411.1 and add text to read as follows: All metal gas piping upstream from the equipment shutoff valve(s) shall be electrically continuous and shall be bonded to an effective ground-fault current path in accordance with Section E3509.7. Except where connected to appliances and at bonding connections, corrugated stainless steel piping shall be isolated from metal gas piping, metal water piping, metal air ducts, metal structural framing, and all electrical wiring methods by a space separation of at least 2 inches. Table E3503.1, or the piping system listing requirements, shall be used to size the bonding conductor used to bond corrugated stainless steel gas tubing (CSST) to the electrical system. *(Fire Prevention and Building Safety Commission; 675 IAC 14-4.3-155.5; filed Oct 21, 2005, 1:50 p.m.: 29 IR 806; filed Mar 6, 2008, 11:13 a.m.: 20080402-IR-675070483FRA; readopted filed Aug 4, 2011, 8:35 a.m.: 20110831-IR-675110254RFA)*

675 IAC 14-4.3-156 Section G2408.3; private garages

Authority: IC 22-13-2-2; IC 22-13-2-13
Affected: IC 22-12; IC 22-13; IC 22-14; IC 22-15; IC 36-7

Sec. 156. Delete SECTION G2408.3. *(Fire Prevention and Building Safety Commission; 675 IAC 14-4.3-156; filed Jun 13, 2005, 3:00 p.m.: 28 IR 3291, eff 90 days after filing with the Secretary of State; readopted filed Aug 4, 2011, 8:35 a.m.: 20110831-IR-675110254RFA)*

675 IAC 14-4.3-157 Section G2412.1; scope

Authority: IC 22-13-2-2; IC 22-13-2-13
Affected: IC 22-12; IC 22-13; IC 22-14; IC 22-15; IC 36-7

Sec. 157. Change SECTION G2412.1 to read as follows: This chapter shall govern the design, installation, and modification of piping systems. The applicability of this code to piping systems extends from the point of delivery to the connections with the equipment and includes the design, materials, components, fabrication, assembly, installation, and testing of such piping systems. *(Fire Prevention and Building Safety Commission; 675 IAC 14-4.3-157; filed Jun 13, 2005, 3:00 p.m.: 28 IR 3291, eff 90 days after filing with the Secretary of State; readopted filed Aug 4, 2011, 8:35 a.m.: 20110831-IR-675110254RFA)*

675 IAC 14-4.3-158 Section G2412.1.1; utility piping systems located within buildings

Authority: IC 22-13-2-2; IC 22-13-2-13
Affected: IC 22-12; IC 22-13; IC 22-14; IC 22-15; IC 36-7

Sec. 158. Delete SECTION G2412.1.1. *(Fire Prevention and Building Safety Commission; 675 IAC 14-4.3-158; filed Jun 13, 2005, 3:00 p.m.: 28 IR 3291, eff 90 days after filing with the Secretary of State; readopted filed Aug 4, 2011, 8:35 a.m.: 20110831-IR-675110254RFA)*

675 IAC 14-4.3-159 Section G2413.2; maximum gas demand

Authority: IC 22-13-2-2; IC 22-13-2-13
Affected: IC 22-12; IC 22-13; IC 22-14; IC 22-15; IC 36-7

Sec. 159. Delete, in the last sentence of the first paragraph of SECTION G2413.2, "a qualified" and substitute "an approved". *(Fire Prevention and Building Safety Commission; 675 IAC 14-4.3-159; filed Jun 13, 2005, 3:00 p.m.: 28 IR 3291, eff 90 days after filing with the Secretary of State; readopted filed Aug 4, 2011, 8:35 a.m.: 20110831-IR-675110254RFA)*

675 IAC 14-4.3-160 Section G2414.3; other materials

Authority: IC 22-13-2-2; IC 22-13-2-13
Affected: IC 22-12; IC 22-13; IC 22-14; IC 22-15; IC 36-7

Sec. 160. Change "code official" to "building official". *(Fire Prevention and Building Safety Commission; 675 IAC 14-4.3-160; filed Jun 13, 2005, 3:00 p.m.: 28 IR 3291, eff 90 days after filing with the Secretary of State; readopted filed Aug 4, 2011, 8:35 a.m.: 20110831-IR-675110254RFA)*

675 IAC 14-4.3-161 Section G2415.8; protection against corrosion

Authority: IC 22-13-2-2; IC 22-13-2-13
Affected: IC 22-12; IC 22-13; IC 22-14; IC 22-15; IC 36-7

Sec. 161. Change, in the third sentence of SECTION G2415.8, "in a manner satisfactory to the code official" to read "as approved by the building official". *(Fire Prevention and Building Safety Commission; 675 IAC 14-4.3-161; filed Jun 13, 2005, 3:00 p.m.: 28 IR 3292, eff 90 days after filing with the Secretary of State; readopted filed Aug 4, 2011, 8:35 a.m.: 20110831-IR-675110254RFA)*

675 IAC 14-4.3-162 Section G2415.9.1; individual outside appliances

Authority: IC 22-13-2-2; IC 22-13-2-13
Affected: IC 22-12; IC 22-13; IC 22-14; IC 22-15; IC 36-7

Sec. 162. Delete SECTION G2415.9.1. *(Fire Prevention and Building Safety Commission; 675 IAC 14-4.3-162; filed Jun 13, 2005, 3:00 p.m.: 28 IR 3292, eff 90 days after filing with the Secretary of State; readopted filed Aug 4, 2011, 8:35 a.m.: 20110831-IR-675110254RFA)*

675 IAC 14-4.3-163 Section G2415.16; testing of piping

Authority: IC 22-13-2-2; IC 22-13-2-13
Affected: IC 22-12; IC 22-13; IC 22-14; IC 22-15; IC 36-7

Sec. 163. Delete, in the last sentence of SECTION G2415.16, ", inspection". *(Fire Prevention and Building Safety Commission; 675 IAC 14-4.3-163; filed Jun 13, 2005, 3:00 p.m.: 28 IR 3292, eff 90 days after filing with the Secretary of State; readopted filed Aug 4, 2011, 8:35 a.m.: 20110831-IR-675110254RFA)*

675 IAC 14-4.3-164 Section G2417; inspection, testing, and purging

Authority: IC 22-13-2-2; IC 22-13-2-13
Affected: IC 22-12; IC 22-13; IC 22-14; IC 22-15; IC 36-7

Sec. 164. Change SECTION G2417 as follows: (a) Change the title to read as follows: SECTION G2417 (406) TESTING AND PURGING.

(b) Delete, in SECTION G2417.1, "inspected and".

(c) Delete SECTION G2417.1.1.

(d) Change the title and text of SECTION G2417.1.2 to read as follows: Additions. In the event additions are made following the pressure test, the affected piping shall be tested.

EXCEPTION: Minor additions, provided the work and connections are tested with a noncorrosive leak-detecting fluid or other leak-detecting methods approved by the building official.

(Fire Prevention and Building Safety Commission; 675 IAC 14-4.3-164; filed Jun 13, 2005, 3:00 p.m.: 28 IR 3292, eff 90 days after filing with the Secretary of State; readopted filed Aug 4, 2011, 8:35 a.m.: 20110831-IR-675110254RFA)

675 IAC 14-4.3-165 Section G2417.6.2; before turning gas on

Authority: IC 22-13-2-2; IC 22-13-2-13
Affected: IC 22-12; IC 22-13; IC 22-14; IC 22-15; IC 36-7

Sec. 165. Change SECTION G2417.6.2 to read as follows: Before gas is introduced into a system of new gas piping, it shall be determined that there are no open fittings or ends and that all manual valves at outlets on equipment are closed and all unused valves at outlets are closed and plugged or capped. *(Fire Prevention and Building Safety Commission; 675 IAC 14-4.3-165; filed Jun 13, 2005, 3:00 p.m.: 28 IR 3292, eff 90 days after filing with the Secretary of State; readopted filed Aug 4, 2011, 8:35 a.m.: 20110831-IR-675110254RFA)*

675 IAC 14-4.3-166 Section G2417.6.3; test for leakage

Authority: IC 22-13-2-2; IC 22-13-2-13
Affected: IC 22-12; IC 22-13; IC 22-14; IC 22-15; IC 36-7

Sec. 166. (a) Delete, in SECTION G2417.6.3, "or into a system that has been initially restored after an interruption of service,".

(b) Change the last sentence of SECTION G2417.6.3 to read as follows: If leakage is indicated, the gas supply shall be shut off until the leakage is corrected. *(Fire Prevention and Building Safety Commission; 675 IAC 14-4.3-166; filed Jun 13, 2005, 3:00 p.m.: 28 IR 3292, eff 90 days after filing with the Secretary of State; readopted filed Aug 4, 2011, 8:35 a.m.: 20110831-IR-675110254RFA)*

675 IAC 14-4.3-167 Section G2417.7.1; removal from service

Authority: IC 22-13-2-2; IC 22-13-2-13
Affected: IC 22-12; IC 22-13; IC 22-14; IC 22-15; IC 36-7

Sec. 167. Delete, from SECTION G2417.7.1, "servicing," and substitute "an". *(Fire Prevention and Building Safety Commission; 675 IAC 14-4.3-167; filed Jun 13, 2005, 3:00 p.m.: 28 IR 3292, eff 90 days after filing with the Secretary of State; readopted filed Aug 4, 2011, 8:35 a.m.: 20110831-IR-675110254RFA)*

675 IAC 14-4.3-168 Section G2420.2; meter valve

Authority: IC 22-13-2-2; IC 22-13-2-13
Affected: IC 22-12; IC 22-13; IC 22-14; IC 22-15; IC 36-7

Sec. 168. Delete SECTION G2420.2. *(Fire Prevention and Building Safety Commission; 675 IAC 14-4.3-168; filed Jun 13, 2005, 3:00 p.m.: 28 IR 3292, eff 90 days after filing with the Secretary of State; readopted filed Aug 4, 2011, 8:35 a.m.: 20110831-IR-675110254RFA)*

675 IAC 14-4.3-168.5 Section G2422.1; connecting appliances

Authority: IC 22-13-2-2; IC 22-13-2-13
Affected: IC 22-12; IC 22-13; IC 22-14; IC 22-15; IC 36-7

Sec. 168.5. Add item 5 to Section G2422.1 to read as follows: 5. Corrugated stainless steel tubing (CSST) where installed in accordance with the manufacturer's instructions. Where CSST enters into an appliance, it shall be protected from damage by a semi-rigid sleeve or conduit. *(Fire Prevention and Building Safety Commission; 675 IAC 14-4.3-168.5; filed Mar 6, 2008, 11:13 a.m.: 20080402-IR-675070483FRA; readopted filed Aug 4, 2011, 8:35 a.m.: 20110831-IR-675110254RFA)*

675 IAC 14-4.3-169 Section G2423; CNG gas-dispensing systems
Authority: IC 22-13-2-2; IC 22-13-2-13
Affected: IC 22-12; IC 22-13; IC 22-14; IC 22-15; IC 36-7

Sec. 169. Delete SECTION G2423. *(Fire Prevention and Building Safety Commission; 675 IAC 14-4.3-169; filed Jun 13, 2005, 3:00 p.m.: 28 IR 3292, eff 90 days after filing with the Secretary of State; readopted filed Aug 4, 2011, 8:35 a.m.: 20110831-IR-675110254RFA)*

675 IAC 14-4.3-170 Section G2425.1; scope
Authority: IC 22-13-2-2; IC 22-13-2-13
Affected: IC 22-12; IC 22-13; IC 22-14; IC 22-15; IC 36-7

Sec. 170. Delete, from SECTION G2425.1, ", maintenance, repair". *(Fire Prevention and Building Safety Commission; 675 IAC 14-4.3-170; filed Jun 13, 2005, 3:00 p.m.: 28 IR 3292, eff 90 days after filing with the Secretary of State; readopted filed Aug 4, 2011, 8:35 a.m.: 20110831-IR-675110254RFA)*

675 IAC 14-4.3-171 Section G2427.6.10; marking
Authority: IC 22-13-2-2; IC 22-13-2-13
Affected: IC 22-12; IC 22-13; IC 22-14; IC 22-15; IC 36-7

Sec. 171. Delete SECTION G2427.6.10. *(Fire Prevention and Building Safety Commission; 675 IAC 14-4.3-171; filed Jun 13, 2005, 3:00 p.m.: 28 IR 3293, eff 90 days after filing with the Secretary of State; readopted filed Aug 4, 2011, 8:35 a.m.: 20110831-IR-675110254RFA)*

675 IAC 14-4.3-172 Section G2427.8; venting system termination location
Authority: IC 22-13-2-2; IC 22-13-2-13
Affected: IC 22-12; IC 22-13; IC 22-14; IC 22-15; IC 36-7

Sec. 172. Change SECTION G2427.8, Item 4, to read as follows: 4. Through-the-wall vents for Categories II and IV appliances and noncategorized appliances shall not terminate over walkways or over an area where condensate or vapor could be detrimental to the operation of regulators, relief valves, or other equipment. *(Fire Prevention and Building Safety Commission; 675 IAC 14-4.3-172; filed Jun 13, 2005, 3:00 p.m.: 28 IR 3293, eff 90 days after filing with the Secretary of State; readopted filed Aug 4, 2011, 8:35 a.m.: 20110831-IR-675110254RFA)*

675 IAC 14-4.3-173 Section G2427.9; condensation drain
Authority: IC 22-13-2-2; IC 22-13-2-13
Affected: IC 22-12; IC 22-13; IC 22-14; IC 22-15; IC 36-7

Sec. 173. Delete SECTION G2427.9 and substitute to read as follows: For collection and disposal of condensate from venting systems, see local ordinance. *(Fire Prevention and Building Safety Commission; 675 IAC 14-4.3-173; filed Jun 13, 2005, 3:00 p.m.: 28 IR 3293, eff 90 days after filing with the Secretary of State; readopted filed Aug 4, 2011, 8:35 a.m.: 20110831-IR-675110254RFA)*

675 IAC 14-4.3-174 Section G2428.1; definitions
Authority: IC 22-13-2-2; IC 22-13-2-13
Affected: IC 22-12; IC 22-13; IC 22-14; IC 22-15; IC 36-7

Sec. 174. Add, to the definition of APPLIANCE CATEGORIZED VENT DIAMETER/AREA in SECTION G2428.1, "approved" after "with" and before "nationally". *(Fire Prevention and Building Safety Commission; 675 IAC 14-4.3-174; filed Jun*

13, 2005, 3:00 p.m.: 28 IR 3293, eff 90 days after filing with the Secretary of State; readopted filed Aug 4, 2011, 8:35 a.m.: 20110831-IR-675110254RFA)

675 IAC 14-4.3-175 Section G2431.1; scope

Authority: IC 22-13-2-2; IC 22-13-2-13
Affected: IC 22-12; IC 22-13; IC 22-14; IC 22-15; IC 36-7

Sec. 175. Change SECTION G2431.1 to read as follows: This chapter shall govern the approval, design, installation, construction, and alteration of the appliances and equipment specifically identified herein. *(Fire Prevention and Building Safety Commission; 675 IAC 14-4.3-175; filed Jun 13, 2005, 3:00 p.m.: 28 IR 3293, eff 90 days after filing with the Secretary of State; readopted filed Aug 4, 2011, 8:35 a.m.: 20110831-IR-675110254RFA)*

675 IAC 14-4.3-176 Section G2438; clothes dryers

Authority: IC 22-13-2-2; IC 22-13-2-13
Affected: IC 22-12; IC 22-13; IC 22-14; IC 22-15; IC 36-7

Sec. 176. Delete SECTION G2438. *(Fire Prevention and Building Safety Commission; 675 IAC 14-4.3-176; filed Jun 13, 2005, 3:00 p.m.: 28 IR 3293, eff 90 days after filing with the Secretary of State; readopted filed Aug 4, 2011, 8:35 a.m.: 20110831-IR-675110254RFA)*

675 IAC 14-4.3-177 Section G2439.5.1; maximum length

Authority: IC 22-13-2-2; IC 22-13-2-13
Affected: IC 22-12; IC 22-13; IC 22-14; IC 22-15; IC 36-7

Sec. 177. Change, in the first sentence of SECTION G2439.5.1, "25 feet (7620 mm)" to read "35 feet". *(Fire Prevention and Building Safety Commission; 675 IAC 14-4.3-177; filed Jun 13, 2005, 3:00 p.m.: 28 IR 3293, eff 90 days after filing with the Secretary of State; readopted filed Aug 4, 2011, 8:35 a.m.: 20110831-IR-675110254RFA)*

675 IAC 14-4.3-178 Section G2448.1; general

Authority: IC 22-13-2-2; IC 22-13-2-13
Affected: IC 22-12; IC 22-13-2-9; IC 22-14; IC 22-15; IC 36-7

Sec. 178. (a) Add an exception to the end of Section G2448.1 to read as follows: Exception: Water heaters regulated by the Boiler and Pressure Vessel Rules Board (680 IAC 2) under IC 22-13-2-9 are not regulated by this code.

(b) Add Section G2448.1.2 to read as follows: G2448.1.2 Anchorage of water heaters in seismic design category C_1. In seismic design category C_1, water heaters shall be anchored or fastened to resist horizontal displacement due to earthquake motion as provided in Section M1307.2. *(Fire Prevention and Building Safety Commission; 675 IAC 14-4.3-178; filed Jun 13, 2005, 3:00 p.m.: 28 IR 3293, eff 90 days after filing with the Secretary of State; filed Mar 6, 2008, 11:13 a.m.: 20080402-IR-675070483FRA; readopted filed Aug 4, 2011, 8:35 a.m.: 20110831-IR-675110254RFA)*

675 IAC 14-4.3-179 Section G2452.1; general

Authority: IC 22-13-2-2; IC 22-13-2-13
Affected: IC 22-12; IC 22-13-2-9; IC 22-14; IC 22-15; IC 36-7

Sec. 179. Add an exception to the end of SECTION G2452.1 to read as follows: EXCEPTION: Boilers regulated by the Boiler and Pressure Vessel Rules Board (680 IAC 2) under IC 22-13-2-9 are not regulated by this code. *(Fire Prevention and Building Safety Commission; 675 IAC 14-4.3-179; filed Jun 13, 2005, 3:00 p.m.: 28 IR 3293, eff 90 days after filing with the Secretary of State; readopted filed Aug 4, 2011, 8:35 a.m.: 20110831-IR-675110254RFA)*

675 IAC 14-4.3-180 Section P2501; general

Authority: IC 22-13-2-2; IC 22-13-2-13
Affected: IC 22-12; IC 22-13; IC 22-14; IC 22-15; IC 36-7

Sec. 180. Delete SECTION P2501 and substitute to read as follows: The provisions of Chapters 1, 2, and 25 through 32 shall establish the requirements for plumbing and plumbing systems. Compliance with the Indiana Plumbing Code (675 IAC 16) shall be allowed instead of compliance with this code. *(Fire Prevention and Building Safety Commission; 675 IAC 14-4.3-180; filed Jun 13, 2005, 3:00 p.m.: 28 IR 3293, eff 90 days after filing with the Secretary of State; readopted filed Aug 4, 2011, 8:35 a.m.: 20110831-IR-675110254RFA)*

675 IAC 14-4.3-181 Section P2502; existing plumbing systems

Authority: IC 22-13-2-2; IC 22-13-2-13
Affected: IC 22-12; IC 22-13; IC 22-14; IC 22-15; IC 36-7

Sec. 181. Delete the text of SECTION P2502 and substitute to read as follows: See the General Administrative Rules (675 IAC 12). *(Fire Prevention and Building Safety Commission; 675 IAC 14-4.3-181; filed Jun 13, 2005, 3:00 p.m.: 28 IR 3294, eff 90 days after filing with the Secretary of State; readopted filed Aug 4, 2011, 8:35 a.m.: 20110831-IR-675110254RFA)*

675 IAC 14-4.3-182 Section P2503.1; inspection required

Authority: IC 22-13-2-2; IC 22-13-2-13
Affected: IC 22-12; IC 22-13; IC 22-14; IC 22-15; IC 36-7

Sec. 182. Delete SECTION P2503.1. *(Fire Prevention and Building Safety Commission; 675 IAC 14-4.3-182; filed Jun 13, 2005, 3:00 p.m.: 28 IR 3294, eff 90 days after filing with the Secretary of State; readopted filed Aug 4, 2011, 8:35 a.m.: 20110831-IR-675110254RFA)*

675 IAC 14-4.3-183 Section P2503.2; concealment

Authority: IC 22-13-2-2; IC 22-13-2-13
Affected: IC 22-12; IC 22-13; IC 22-14; IC 22-15; IC 36-7

Sec. 183. Delete, in SECTION P2503.2, ", inspected". *(Fire Prevention and Building Safety Commission; 675 IAC 14-4.3-183; filed Jun 13, 2005, 3:00 p.m.: 28 IR 3294, eff 90 days after filing with the Secretary of State; readopted filed Aug 4, 2011, 8:35 a.m.: 20110831-IR-675110254RFA)*

675 IAC 14-4.3-184 Section P2503.3; responsibility of permitter

Authority: IC 22-13-2-2; IC 22-13-2-13
Affected: IC 22-12; IC 22-13; IC 22-14; IC 22-15; IC 36-7

Sec. 184. Delete SECTION P2503.3. *(Fire Prevention and Building Safety Commission; 675 IAC 14-4.3-184; filed Jun 13, 2005, 3:00 p.m.: 28 IR 3294, eff 90 days after filing with the Secretary of State; readopted filed Aug 4, 2011, 8:35 a.m.: 20110831-IR-675110254RFA)*

675 IAC 14-4.3-185 Section P2503.5.2; finished plumbing

Authority: IC 22-13-2-2; IC 22-13-2-13
Affected: IC 22-12; IC 22-13; IC 22-14; IC 22-15; IC 36-7

Sec. 185. Delete, in SECTION P2503.5.2, Item 2, "the local administrative authority" and substitute "local ordinance". *(Fire Prevention and Building Safety Commission; 675 IAC 14-4.3-185; filed Jun 13, 2005, 3:00 p.m.: 28 IR 3294, eff 90 days after filing with the Secretary of State; readopted filed Aug 4, 2011, 8:35 a.m.: 20110831-IR-675110254RFA)*

675 IAC 14-4.3-186 Section P2503.7; inspection and testing of backflow prevention devices
Authority: IC 22-13-2-2; IC 22-13-2-13
Affected: IC 22-12; IC 22-13; IC 22-14; IC 22-15; IC 36-7

Sec. 186. Change the title and text of SECTION P2503.7 to read as follows: Testing of backflow prevention devices. Testing of backflow prevention devices shall comply with SECTION P2503.7.2. *(Fire Prevention and Building Safety Commission; 675 IAC 14-4.3-186; filed Jun 13, 2005, 3:00 p.m.: 28 IR 3294, eff 90 days after filing with the Secretary of State; readopted filed Aug 4, 2011, 8:35 a.m.: 20110831-IR-675110254RFA)*

675 IAC 14-4.3-187 Section P2503.7.1; inspections
Authority: IC 22-13-2-2; IC 22-13-2-13
Affected: IC 22-12; IC 22-13; IC 22-14; IC 22-15; IC 36-7

Sec. 187. Delete SECTION P2503.7.1. *(Fire Prevention and Building Safety Commission; 675 IAC 14-4.3-187; filed Jun 13, 2005, 3:00 p.m.: 28 IR 3294, eff 90 days after filing with the Secretary of State; readopted filed Aug 4, 2011, 8:35 a.m.: 20110831-IR-675110254RFA)*

675 IAC 14-4.3-188 Section P2503.7.2; testing
Authority: IC 22-13-2-2; IC 22-13-2-13
Affected: IC 22-12; IC 22-13; IC 22-14; IC 22-15; IC 36-7

Sec. 188. Change SECTION P2503.7.2 to read as follows: Reduced pressure principle backflow preventers, double check valve assemblies, double-detector check valve assemblies, and pressure vacuum breaker assemblies shall be tested at the time of installation. *(Fire Prevention and Building Safety Commission; 675 IAC 14-4.3-188; filed Jun 13, 2005, 3:00 p.m.: 28 IR 3294, eff 90 days after filing with the Secretary of State; readopted filed Aug 4, 2011, 8:35 a.m.: 20110831-IR-675110254RFA)*

675 IAC 14-4.3-189 Section P2603.1; general
Authority: IC 22-13-2-2; IC 22-13-2-13
Affected: IC 22-12; IC 22-13; IC 22-14; IC 22-15; IC 36-7

Sec. 189. Delete, in SECTION P2603.1, "or repairing". *(Fire Prevention and Building Safety Commission; 675 IAC 14-4.3-189; filed Jun 13, 2005, 3:00 p.m.: 28 IR 3294, eff 90 days after filing with the Secretary of State; readopted filed Aug 4, 2011, 8:35 a.m.: 20110831-IR-675110254RFA)*

675 IAC 14-4.3-190 Section P2603.2.1; protection against physical damage
Authority: IC 22-13-2-2; IC 22-13-2-13
Affected: IC 22-12; IC 22-13; IC 22-14; IC 22-15; IC 36-7

Sec. 190. Make the following changes in SECTION P2603.2.1: (a) Change "1.5 inches (38 mm)" to read "1¼ inches (31 mm)".

(b) Delete "and shall extend a minimum of 2 inches (51 mm) above sole plates and below top plates". *(Fire Prevention and Building Safety Commission; 675 IAC 14-4.3-190; filed Jun 13, 2005, 3:00 p.m.: 28 IR 3294, eff 90 days after filing with the Secretary of State; readopted filed Aug 4, 2011, 8:35 a.m.: 20110831-IR-675110254RFA)*

675 IAC 14-4.3-191 Section P2603.5; pipes through footings or foundation walls
Authority: IC 22-13-2-2; IC 22-13-2-13
Affected: IC 22-12; IC 22-13; IC 22-14; IC 22-15; IC 36-7

Sec. 191. Delete, in SECTION P2603.5, "two pipe sizes". *(Fire Prevention and Building Safety Commission; 675 IAC 14-4.3-*

191; filed Jun 13, 2005, 3:00 p.m.: 28 IR 3294, eff 90 days after filing with the Secretary of State; readopted filed Aug 4, 2011, 8:35 a.m.: 20110831-IR-675110254RFA)

675 IAC 14-4.3-191.5 Section P2605.1; general

Authority: IC 22-13-2-2; IC 22-13-2-13
Affected: IC 22-12; IC 22-13; IC 22-14; IC 22-15; IC 36-7

Sec. 191.5. In Section P2605.1, add item 5 to read as follows: 5. Metal piping shall be isolated from corrugated stainless steel tubing by a space separation of at least 2 inches (51 mm). See also Section G2411.1. *(Fire Prevention and Building Safety Commission; 675 IAC 14-4.3-191.5; filed Mar 6, 2008, 11:13 a.m.: 20080402-IR-675070483FRA; readopted filed Aug 4, 2011, 8:35 a.m.: 20110831-IR-675110254RFA)*

675 IAC 14-4.3-192 Section P2706.2; standpipes

Authority: IC 22-13-2-2; IC 22-13-2-13
Affected: IC 22-12; IC 22-13; IC 22-14; IC 22-15; IC 36-7

Sec. 192. Add an exception to the end of SECTION P2706.2 to read as follows: EXCEPTION: A 1½ inch (38 mm) standpipe shall extend a minimum of 30 inches (762 mm) and a maximum of 42 inches (1,067 mm). *(Fire Prevention and Building Safety Commission; 675 IAC 14-4.3-192; filed Jun 13, 2005, 3:00 p.m.: 28 IR 3295, eff 90 days after filing with the Secretary of State; readopted filed Aug 4, 2011, 8:35 a.m.: 20110831-IR-675110254RFA)*

675 IAC 14-4.3-193 Section P2706.2.1; laundry tray connection

Authority: IC 22-13-2-2; IC 22-13-2-13
Affected: IC 22-12; IC 22-13; IC 22-14; IC 22-15; IC 36-7

Sec. 193. Delete the last sentence of SECTION P2706.2.1. *(Fire Prevention and Building Safety Commission; 675 IAC 14-4.3-193; filed Jun 13, 2005, 3:00 p.m.: 28 IR 3295, eff 90 days after filing with the Secretary of State; readopted filed Aug 4, 2011, 8:35 a.m.: 20110831-IR-675110254RFA)*

675 IAC 14-4.3-194 Section P2717.3; sink, dishwasher, and food grinder

Authority: IC 22-13-2-2; IC 22-13-2-13
Affected: IC 22-12; IC 22-13; IC 22-14; IC 22-15; IC 36-7

Sec. 194. Change the last sentence of P2717.3 to read as follows: The dishwasher waste line shall rise and be securely fastened. *(Fire Prevention and Building Safety Commission; 675 IAC 14-4.3-194; filed Jun 13, 2005, 3:00 p.m.: 28 IR 3295, eff 90 days after filing with the Secretary of State; readopted filed Aug 4, 2011, 8:35 a.m.: 20110831-IR-675110254RFA)*

675 IAC 14-4.3-195 Section P2801.5; required pan

Authority: IC 22-13-2-2; IC 22-13-2-13
Affected: IC 22-12; IC 22-13; IC 22-14; IC 22-15; IC 36-7

Sec. 195. (a) In the first sentence of SECTION P2801.5 delete "in locations where leakage of the tanks or connections will cause damage" and insert "above a finished ceiling".

(b) Add an exception to SECTION P2801.5 to read as follows: EXCEPTION: When installed on a water-resistant floor with a floor drain in the same room or space. *(Fire Prevention and Building Safety Commission; 675 IAC 14-4.3-195; filed Jun 13, 2005, 3:00 p.m.: 28 IR 3295, eff 90 days after filing with the Secretary of State; readopted filed Aug 4, 2011, 8:35 a.m.: 20110831-IR-675110254RFA)*

675 IAC 14-4.3-196 Section P2802.2; temperature control
Authority: IC 22-13-2-2; IC 22-13-2-13
Affected: IC 22-12; IC 22-13; IC 22-14; IC 22-15; IC 36-7

Sec. 196. Change, in SECTION P2802.2, "requires" to "allows". *(Fire Prevention and Building Safety Commission; 675 IAC 14-4.3-196; filed Jun 13, 2005, 3:00 p.m.: 28 IR 3295, eff 90 days after filing with the Secretary of State; readopted filed Aug 4, 2011, 8:35 a.m.: 20110831-IR-675110254RFA)*

675 IAC 14-4.3-197 Section P2901.1; potable water required
Authority: IC 22-13-2-2; IC 22-13-2-13
Affected: IC 22-12; IC 22-13; IC 22-14; IC 22-15; IC 36-7

Sec. 197. Change, in SECTION P2901.1, "appropriate" to "approved". *(Fire Prevention and Building Safety Commission; 675 IAC 14-4.3-197; filed Jun 13, 2005, 3:00 p.m.: 28 IR 3295, eff 90 days after filing with the Secretary of State; readopted filed Aug 4, 2011, 8:35 a.m.: 20110831-IR-675110254RFA)*

675 IAC 14-4.3-198 Section P2903.5; water hammer
Authority: IC 22-13-2-2; IC 22-13-2-13
Affected: IC 22-12; IC 22-13; IC 22-14; IC 22-15; IC 36-7

Sec. 198. Change SECTION P2903.5 to read as follows: Water Hammer. The flow velocity through the water distribution system shall be controlled to reduce the possibility of water hammer. Water hammer arrestors, when installed, shall be installed in accordance with manufacturer's installation instructions and shall conform to ASSE/ANSI 1010. *(Fire Prevention and Building Safety Commission; 675 IAC 14-4.3-198; filed Jun 13, 2005, 3:00 p.m.: 28 IR 3295, eff 90 days after filing with the Secretary of State; readopted filed Aug 4, 2011, 8:35 a.m.: 20110831-IR-675110254RFA)*

675 IAC 14-4.3-199 Section P2903.9.1; service valve
Authority: IC 22-13-2-2; IC 22-13-2-13
Affected: IC 22-12; IC 22-13; IC 22-14; IC 22-15; IC 36-7

Sec. 199. Change, in the last sentence of SECTION P2903.9.1, "requirements" to "ordinance". *(Fire Prevention and Building Safety Commission; 675 IAC 14-4.3-199; filed Jun 13, 2005, 3:00 p.m.: 28 IR 3295, eff 90 days after filing with the Secretary of State; readopted filed Aug 4, 2011, 8:35 a.m.: 20110831-IR-675110254RFA)*

675 IAC 14-4.3-200 Section P3007.1; sewage ejectors or sewage pumps
Authority: IC 22-13-2-2; IC 22-13-2-13
Affected: IC 22-12; IC 22-13; IC 22-14; IC 22-15; IC 36-7

Sec. 200. Delete the fourth sentence of SECTION 3007.1 and substitute to read as follows: A check valve, and a full way valve located on the discharge side of the check valve, shall be installed in the pump or ejector discharge piping between the pump or ejector and the drainage system. *(Fire Prevention and Building Safety Commission; 675 IAC 14-4.3-200; filed Jun 13, 2005, 3:00 p.m.: 28 IR 3295, eff 90 days after filing with the Secretary of State; readopted filed Aug 4, 2011, 8:35 a.m.: 20110831-IR-675110254RFA)*

675 IAC 14-4.3-201 Section P3007.1.1; ejectors alarms
Authority: IC 22-13-2-2; IC 22-13-2-13
Affected: IC 22-12; IC 22-13; IC 22-14; IC 22-15; IC 36-7

Sec. 201. Add SECTION 3007.1.1 to read as follows: Sewage ejectors that discharge by means of automatic pumping

equipment shall be provided with an approved, electrically operated high water indicating alarm. A remote sensor shall activate the alarm when the fluid level exceeds a preset level that is less than the maximum capacity of the pit. The alarm shall function to provide a signal to occupants within the dwelling. Electrical power for the alarm shall be supplied through a branch circuit separate from that supplying the pump motor. *(Fire Prevention and Building Safety Commission; 675 IAC 14-4.3-201; filed Jun 13, 2005, 3:00 p.m.: 28 IR 3295, eff 90 days after filing with the Secretary of State; readopted filed Aug 4, 2011, 8:35 a.m.: 20110831-IR-675110254RFA)*

675 IAC 14-4.3-202 Section P3101.4; extension outside a structure

Authority: IC 22-13-2-2; IC 22-13-2-13
Affected: IC 22-12; IC 22-13; IC 22-14; IC 22-15; IC 36-7

Sec. 202. Delete SECTION P3101.4. *(Fire Prevention and Building Safety Commission; 675 IAC 14-4.3-202; filed Jun 13, 2005, 3:00 p.m.: 28 IR 3296, eff 90 days after filing with the Secretary of State; readopted filed Aug 4, 2011, 8:35 a.m.: 20110831-IR-675110254RFA)*

675 IAC 14-4.3-203 Section P3101.5; flood resistance

Authority: IC 22-13-2-2; IC 22-13-2-13
Affected: IC 22-12; IC 22-13; IC 22-14; IC 22-15; IC 36-7

Sec. 203. Delete SECTION P3101.5. *(Fire Prevention and Building Safety Commission; 675 IAC 14-4.3-203; filed Jun 13, 2005, 3:00 p.m.: 28 IR 3296, eff 90 days after filing with the Secretary of State; readopted filed Aug 4, 2011, 8:35 a.m.: 20110831-IR-675110254RFA)*

675 IAC 14-4.3-204 Section P3103.1; roof extension

Authority: IC 22-13-2-2; IC 22-13-2-13
Affected: IC 22-12; IC 22-13; IC 22-14; IC 22-15; IC 36-7

Sec. 204. Change SECTION P3103.1 to read as follows: All open pipes that extend through a roof shall be terminated at least 12 inches (305 mm) above the highest point where the vent passes through the roof except that where a roof is to be used for any purpose other than weather protection, the vent extension shall terminate no less than 7 feet (2,134 mm) above the roof. *(Fire Prevention and Building Safety Commission; 675 IAC 14-4.3-204; filed Jun 13, 2005, 3:00 p.m.: 28 IR 3296, eff 90 days after filing with the Secretary of State; readopted filed Aug 4, 2011, 8:35 a.m.: 20110831-IR-675110254RFA)*

675 IAC 14-4.3-205 Section P3103.2; frost closure

Authority: IC 22-13-2-2; IC 22-13-2-13
Affected: IC 22-12; IC 22-13; IC 22-14; IC 22-15; IC 36-7

Sec. 205. Delete SECTION P3103.2. *(Fire Prevention and Building Safety Commission; 675 IAC 14-4.3-205; filed Jun 13, 2005, 3:00 p.m.: 28 IR 3296, eff 90 days after filing with the Secretary of State; readopted filed Aug 4, 2011, 8:35 a.m.: 20110831-IR-675110254RFA)*

675 IAC 14-4.3-206 Section P3105.1; maximum distance of fixture trap to vent

Authority: IC 22-13-2-2; IC 22-13-2-13
Affected: IC 22-12; IC 22-13; IC 22-14; IC 22-15; IC 36-7

Sec. 206. Add a note to TABLE P3105.1 to read as follows: NOTE: A trap arm serving only a bath tub, tub/shower combination, or shower may be increased to 9 feet with a slope of not less than 1/8 inch per foot. *(Fire Prevention and Building Safety Commission; 675 IAC 14-4.3-206; filed Jun 13, 2005, 3:00 p.m.: 28 IR 3296, eff 90 days after filing with the Secretary of State; filed Mar 6, 2008, 11:13 a.m.: 20080402-IR-675070483FRA; readopted filed Aug 4, 2011, 8:35 a.m.: 20110831-IR-*

675110254RFA)

675 IAC 14-4.3-207 Table P3201.4; building traps
Authority: IC 22-13-2-2; IC 22-13-2-13
Affected: IC 22-12; IC 22-13; IC 22-14; IC 22-15; IC 36-7

Sec. 207. Change SECTION P3201.4 as follows: Insert a "." after "installed" and delete the remainder of the paragraph. *(Fire Prevention and Building Safety Commission; 675 IAC 14-4.3-207; filed Jun 13, 2005, 3:00 p.m.: 28 IR 3296, eff 90 days after filing with the Secretary of State; readopted filed Aug 4, 2011, 8:35 a.m.: 20110831-IR-675110254RFA)*

675 IAC 14-4.3-208 Table P3201.7; size of traps and trap arms for plumbing fixtures
Authority: IC 22-13-2-2; IC 22-13-2-13
Affected: IC 22-12; IC 22-13; IC 22-14; IC 22-15; IC 36-7

Sec. 208. Change TABLE P3201.7 as follows: (a) Change the shower trap size minimum from "2" to "1½".
(b) Add note (b) to read as follows: (b) A clothes washer standpipe may be 1½ inches when installed in accordance with SECTION P2706.2. *(Fire Prevention and Building Safety Commission; 675 IAC 14-4.3-208; filed Jun 13, 2005, 3:00 p.m.: 28 IR 3296, eff 90 days after filing with the Secretary of State; readopted filed Aug 4, 2011, 8:35 a.m.: 20110831-IR-675110254RFA)*

675 IAC 14-4.3-209 Section E3301.2; scope
Authority: IC 22-13-2-2; IC 22-13-2-13
Affected: IC 22-12; IC 22-13; IC 22-14; IC 22-15; IC 36-7

Sec. 209. Change SECTION E3301.2 to read as follows: Chapters 1 and 33 through 42 shall cover the installation of electrical systems, equipment, and components for the permanent heating, ventilating, air conditioning, electrical, plumbing, sanitary, emergency detection, emergency communication, or fire or explosion suppression systems that are part of a Class 1 structure-townhouse or Class 2 structure-one and two family dwelling.
Services within the scope of this code shall be limited to 120/240-volt, 0 to 400 ampere, single-phase systems.
The omission from these chapters of any material or method of construction provided for in the Indiana Electrical Code (675 IAC 17) shall not be construed as prohibiting the use of such material or method of construction. Electrical systems, equipment, or components not specifically addressed in these chapters shall comply with the applicable provisions of the Indiana Electrical Code (675 IAC 17).
Compliance with the Indiana Electrical Code (675 IAC 17) is allowed instead of compliance with this code.
EXCEPTION: This section does not require the installation of an electrical system in Class 2 structures.
(Fire Prevention and Building Safety Commission; 675 IAC 14-4.3-209; filed Jun 13, 2005, 3:00 p.m.: 28 IR 3296, eff 90 days after filing with the Secretary of State; readopted filed Aug 4, 2011, 8:35 a.m.: 20110831-IR-675110254RFA)

675 IAC 14-4.3-210 Section E3301.3; not covered
Authority: IC 22-13-2-2; IC 22-13-2-13
Affected: IC 22-12; IC 22-13; IC 22-14; IC 22-15; IC 36-7

Sec. 210. Add Item 3 to SECTION E3301.3 to read as follows: 3. Installations not part of a Class 1 structure-townhouse or Class 2 structure-one and two family dwelling. *(Fire Prevention and Building Safety Commission; 675 IAC 14-4.3-210; filed Jun 13, 2005, 3:00 p.m.: 28 IR 3297, eff 90 days after filing with the Secretary of State; readopted filed Aug 4, 2011, 8:35 a.m.: 20110831-IR-675110254RFA)*

675 IAC 14-4.3-211 Section E3303.2; inspection required
Authority: IC 22-13-2-2; IC 22-13-2-13
Affected: IC 22-12; IC 22-13; IC 22-14; IC 22-15; IC 36-7

Sec. 211. Delete SECTION E3303.2. *(Fire Prevention and Building Safety Commission; 675 IAC 14-4.3-211; filed Jun 13, 2005, 3:00 p.m.: 28 IR 3297, eff 90 days after filing with the Secretary of State; readopted filed Aug 4, 2011, 8:35 a.m.: 20110831-IR-675110254RFA)*

675 IAC 14-4.3-212 Section E3304.2; interrupting rating

Authority: IC 22-13-2-2; IC 22-13-2-13
Affected: IC 22-12; IC 22-13; IC 22-14; IC 22-15; IC 36-7

Sec. 212. Change SECTION E3304.2 to read as follows: Equipment intended to interrupt current at fault levels shall have an interrupting rating sufficient for the nominal circuit voltage and the current that is available at the line terminals of the equipment. Equipment intended to interrupt current at other than fault levels shall have an interrupting rating at nominal circuit voltage sufficient for the current that must be interrupted. *(Fire Prevention and Building Safety Commission; 675 IAC 14-4.3-212; filed Jun 13, 2005, 3:00 p.m.: 28 IR 3297, eff 90 days after filing with the Secretary of State; readopted filed Aug 4, 2011, 8:35 a.m.: 20110831-IR-675110254RFA)*

675 IAC 14-4.3-213 Section E3305.6; illumination

Authority: IC 22-13-2-2; IC 22-13-2-13
Affected: IC 22-12; IC 22-13; IC 22-14; IC 22-15; IC 36-7

Sec. 213. Add a sentence to the end of SECTION E3305.6 to read as follows: Additional lighting outlets shall not be required where the work space is illuminated by an adjacent artificial light source. *(Fire Prevention and Building Safety Commission; 675 IAC 14-4.3-213; filed Jun 13, 2005, 3:00 p.m.: 28 IR 3297, eff 90 days after filing with the Secretary of State; filed Oct 21, 2005, 1:50 p.m.: 29 IR 806; readopted filed Aug 4, 2011, 8:35 a.m.: 20110831-IR-675110254RFA)*

675 IAC 14-4.3-214 Section E3306.5; individual conductor insulation (Repealed)

Sec. 214. *(Repealed by Fire Prevention and Building Safety Commission; filed Oct 21, 2005, 1:50 p.m.: 29 IR 815)*

675 IAC 14-4.3-214.5 Section E3307.1; grounded conductors

Authority: IC 22-13-2-2; IC 22-13-2-13
Affected: IC 22-12; IC 22-13; IC 22-14; IC 22-15; IC 36-7

Sec. 214.5. In the second sentence of SECTION E3307.1, after "distinctive white", add "or gray". *(Fire Prevention and Building Safety Commission; 675 IAC 14-4.3-214.5; filed Oct 21, 2005, 1:50 p.m.: 29 IR 807; readopted filed Aug 4, 2011, 8:35 a.m.: 20110831-IR-675110254RFA)*

675 IAC 14-4.3-215 Section E3401; general

Authority: IC 22-13-2-2; IC 22-13-2-13
Affected: IC 22-12; IC 22-13; IC 22-14; IC 22-15; IC 36-7

Sec. 215. Change Section E3401 as follows:

(1) Delete the definition of APPROVED and substitute to read as follows: See the definition of APPROVED in Section R202.

(2) Delete the definition of BRANCH CIRCUIT, GENERAL PURPOSE and substitute: A branch circuit that supplies two or more receptacles or outlets for lighting and appliances.

(3) Change the definition of Grounding Conductor, Equipment to read as follows: The conductor used to connect the noncurrent-carrying metal parts of equipment, raceways, and other enclosures to the system grounded conductor or the grounding electrode conductor, or both, at the service equipment or at the source of a separately derived system.

(4) Change the definition of Grounding Electrode Conductor to read as follows: The conductor used to connect the grounding electrode(s) to the equipment grounding conductor or to the grounded conductor, or to both, at the service equipment, at each

building or structure where supplied by a feeder(s) or branch circuit(s), or at the source of a separately derived system.

(5) Delete the definition of LABELED and substitute as follows: See the definition of LABELED in Section R202.

(6) Delete the definition of LISTED and substitute to read as follows: See the definition of LISTED AND LISTING in Section R202.

(Fire Prevention and Building Safety Commission; 675 IAC 14-4.3-215; filed Jun 13, 2005, 3:00 p.m.: 28 IR 3297, eff 90 days after filing with the Secretary of State; filed Oct 21, 2005, 1:50 p.m.: 29 IR 807; filed Mar 6, 2008, 11:13 a.m.: 20080402-IR-675070483FRA; readopted filed Aug 4, 2011, 8:35 a.m.: 20110831-IR-675110254RFA)

675 IAC 14-4.3-216 Section E3501.6.2; service disconnect location

Authority: IC 22-13-2-2; IC 22-13-2-13
Affected: IC 22-12; IC 22-13; IC 22-14; IC 22-15; IC 36-7

Sec. 216. At the end of SECTION E3501.6.2, add a sentence to read as follows: Conductors shall be considered outside of a building or structure under any of the following conditions:

(1) where installed under not less than 2 inches (51 mm) of concrete beneath a building or other structure,

(2) where installed within a building or other structure in a raceway that is encased in concrete or brick not less than 2 inches thick, or

(3) where installed in conduit and under not less than 18 inches (457 mm) of earth beneath a building or other structure.

(Fire Prevention and Building Safety Commission; 675 IAC 14-4.3-216; filed Jun 13, 2005, 3:00 p.m.: 28 IR 3297, eff 90 days after filing with the Secretary of State; filed Oct 21, 2005, 1:50 p.m.: 29 IR 807; readopted filed Aug 4, 2011, 8:35 a.m.: 20110831-IR-675110254RFA)

675 IAC 14-4.3-217 Table E3503.1; service conductor and grounding electrode conductor sizing (Repealed)

Sec. 217. *(Repealed by Fire Prevention and Building Safety Commission; filed Oct 21, 2005, 1:50 p.m.: 29 IR 815)*

675 IAC 14-4.3-218 Section E3504.2.1; above roofs

Authority: IC 22-13-2-2; IC 22-13-2-13
Affected: IC 22-12; IC 22-13; IC 22-14; IC 22-15; IC 36-7

Sec. 218. In Exception 1, after "pedestrian", insert "or vehicular". *(Fire Prevention and Building Safety Commission; 675 IAC 14-4.3-218; filed Jun 13, 2005, 3:00 p.m.: 28 IR 3298, eff 90 days after filing with the Secretary of State; readopted filed Aug 4, 2011, 8:35 a.m.: 20110831-IR-675110254RFA)*

675 IAC 14-4.3-219 Section E3505.5; protection of service cables against damage

Authority: IC 22-13-2-2; IC 22-13-2-13
Affected: IC 22-12; IC 22-13; IC 22-14; IC 22-15; IC 36-7

Sec. 219. In SECTION E3505.5, delete "rigid nonmetallic conduit suitable for the location" and insert "Schedule 80 rigid nonmetallic conduit". *(Fire Prevention and Building Safety Commission; 675 IAC 14-4.3-219; filed Jun 13, 2005, 3:00 p.m.: 28 IR 3298, eff 90 days after filing with the Secretary of State; readopted filed Aug 4, 2011, 8:35 a.m.: 20110831-IR-675110254RFA)*

675 IAC 14-4.3-220 Section E3506.3; available short-circuit current

Authority: IC 22-13-2-2; IC 22-13-2-13
Affected: IC 22-12; IC 22-13; IC 22-14; IC 22-15; IC 36-7

Sec. 220. Delete, from SECTION E3506.3, ", but not less than 10,000 amperes". *(Fire Prevention and Building Safety Commission; 675 IAC 14-4.3-220; filed Jun 13, 2005, 3:00 p.m.: 28 IR 3298, eff 90 days after filing with the Secretary of State; readopted filed Aug 4, 2011, 8:35 a.m.: 20110831-IR-675110254RFA)*

675 IAC 14-4.3-220.1 Section E3507.3; two or more buildings or structures supplied from a common service

Authority: IC 22-13-2-2; IC 22-13-2-13
Affected: IC 22-12; IC 22-13; IC 22-14; IC 22-15; IC 36-7

Sec. 220.1. Delete the title and first sentence of Section E3507.3 and substitute to read as follows: E3507.3 Buildings supplied by feeder(s) or branch circuit(s). Buildings or structures supplied by feeders(s) or branch circuit(s) shall have a grounding electrode or grounding electrode system installed in accordance with Section E3508. The grounding electrode conductor(s) shall be connected in a manner specified in Section E3507.1 or E3507.2. *(Fire Prevention and Building Safety Commission; 675 IAC 14-4.3-220.1; filed Mar 6, 2008, 11:13 a.m.: 20080402-IR-675070483FRA; readopted filed Aug 4, 2011, 8:35 a.m.: 20110831-IR-675110254RFA)*

675 IAC 14-4.3-220.2 Section E3507.3.1; equipment grounding conductor

Authority: IC 22-13-2-2; IC 22-13-2-13
Affected: IC 22-12; IC 22-13; IC 22-14; IC 22-15; IC 36-7

Sec. 220.2. After the second sentence of Section E3507.3.1, add a sentence to read as follows: The equipment grounding conductor shall be sized in accordance with Section R3808.12. *(Fire Prevention and Building Safety Commission; 675 IAC 14-4.3-220.2; filed Mar 6, 2008, 11:13 a.m.: 20080402-IR-675070483FRA; readopted filed Aug 4, 2011, 8:35 a.m.: 20110831-IR-675110254RFA)*

675 IAC 14-4.3-220.3 Section E3508.1; grounding electrode system

Authority: IC 22-13-2-2; IC 22-13-2-13
Affected: IC 22-12; IC 22-13; IC 22-14; IC 22-15; IC 36-7

Sec. 220.3. (a) In the first sentence of SECTION E3508.1, delete "available" and insert "present".

(b) After the text of SECTION E3508.1, add an exception to read as follows: Exception: Concrete-encased electrodes of existing buildings or structures shall not be required to be part of the grounding electrode system where the steel reinforcing bars or rods are not accessible for use without disturbing the concrete. *(Fire Prevention and Building Safety Commission; 675 IAC 14-4.3-220.3; filed Oct 21, 2005, 1:50 p.m.: 29 IR 807; readopted filed Aug 4, 2011, 8:35 a.m.: 20110831-IR-675110254RFA)*

675 IAC 14-4.3-220.6 Section E3509.7; bonding other metal piping

Authority: IC 22-13-2-2; IC 22-13-2-13
Affected: IC 22-12; IC 22-13; IC 22-14; IC 22-15; IC 36-7

Sec. 220.6. Before the period following the next to last sentence in SECTION E3509.7, add "if connected using a fixed wiring method". *(Fire Prevention and Building Safety Commission; 675 IAC 14-4.3-220.6; filed Oct 21, 2005, 1:50 p.m.: 29 IR 807; readopted filed Aug 4, 2011, 8:35 a.m.: 20110831-IR-675110254RFA)*

675 IAC 14-4.3-220.7 Section E3510.1; installation

Authority: IC 22-13-2-2; IC 22-13-2-13
Affected: IC 22-12; IC 22-13; IC 22-14; IC 22-15; IC 36-7

Sec. 220.7. Change SECTION E3510.1 as follows: (a) In the second sentence of SECTION E3510.1, delete "severe".

(b) In the third sentence of SECTION E3510.1, after "grounding", add "electrode".

(c) In the third sentence of SECTION E3510.1, delete "and".

(d) In the third sentence of SECTION E3510.1, before "rigid nonmetallic conduit", add "Schedule 80".

(e) In the fourth sentence of SECTION E3510.1, after "grounding", add "electrode".

(f) In the fourth sentence of SECTION E3510.1, before "rigid nonmetallic conduit", add "Schedule 80".

(g) In the first sentence of the second paragraph of SECTION E3510.1, delete "Insulated or bare" and insert "Bare". *(Fire*

Prevention and Building Safety Commission; 675 IAC 14-4.3-220.7; filed Oct 21, 2005, 1:50 p.m.: 29 IR 808; readopted filed Aug 4, 2011, 8:35 a.m.: 20110831-IR-675110254RFA)

675 IAC 14-4.3-220.8 Section E3510.2; enclosures for grounding electrode conductors

Authority: IC 22-13-2-2; IC 22-13-2-13
Affected: IC 22-12; IC 22-13; IC 22-14; IC 22-15; IC 36-7

Sec. 220.8. (a) In the first and second sentences of SECTION E3510.2, delete "Metal" and insert "Ferrous metal".

(b) In the second and third sentences of SECTION E3510.2, insert "electrode" between "grounding" and "conductor". *(Fire Prevention and Building Safety Commission; 675 IAC 14-4.3-220.8; filed Oct 21, 2005, 1:50 p.m.: 29 IR 808; readopted filed Aug 4, 2011, 8:35 a.m.: 20110831-IR-675110254RFA)*

675 IAC 14-4.3-221 Section E3511.1; methods of grounding conductor connection to electrodes

Authority: IC 22-13-2-2; IC 22-13-2-13
Affected: IC 22-12; IC 22-13; IC 22-14; IC 22-15; IC 36-7

Sec. 221. Change the first sentence of SECTION E3511.1 by adding "exothermic welding" between "by" and "listed". *(Fire Prevention and Building Safety Commission; 675 IAC 14-4.3-221; filed Jun 13, 2005, 3:00 p.m.: 28 IR 3298, eff 90 days after filing with the Secretary of State; readopted filed Aug 4, 2011, 8:35 a.m.: 20110831-IR-675110254RFA)*

675 IAC 14-4.3-222 Section E3602.9.1; minimum branch circuit for ranges

Authority: IC 22-13-2-2; IC 22-13-2-13
Affected: IC 22-12; IC 22-13; IC 22-14; IC 22-15; IC 36-7

Sec. 222. Add Exceptions 1 and 2 to SECTION E3602.9.1 to read as follows:

EXCEPTIONS: 1. Tap conductors supplying electric ranges, wall-mounted electric ovens, and counter-mounted electric cooking units from a 50-ampere branch circuit shall have an ampacity of not less than 20 and shall be sufficient for the load to be served. The taps shall not be longer than necessary for servicing the appliance.

2. The neutral conductor of a 3-wire branch circuit supplying a household electric range, a wall-mounted oven, or a counter-mounted cooking unit shall be permitted to be smaller than the ungrounded conductors where the maximum demand of a range of 8¾ kW or more rating has been computed according to Column A of TABLE E3604.3(2), but shall have an ampacity of not less than 70 percent of the branch-circuit rating and shall not be smaller than No. 10.

(Fire Prevention and Building Safety Commission; 675 IAC 14-4.3-222; filed Jun 13, 2005, 3:00 p.m.: 28 IR 3298, eff 90 days after filing with the Secretary of State; readopted filed Aug 4, 2011, 8:35 a.m.: 20110831-IR-675110254RFA)

675 IAC 14-4.3-223 Section E3602.10; branch circuits serving heating loads

Authority: IC 22-13-2-2; IC 22-13-2-13
Affected: IC 22-12; IC 22-13; IC 22-14; IC 22-15; IC 36-7

Sec. 223. In the second sentence of SECTION E3602.10, insert "25" to the list of circuit ratings. *(Fire Prevention and Building Safety Commission; 675 IAC 14-4.3-223; filed Jun 13, 2005, 3:00 p.m.: 28 IR 3298, eff 90 days after filing with the Secretary of State; readopted filed Aug 4, 2011, 8:35 a.m.: 20110831-IR-675110254RFA)*

675 IAC 14-4.3-224 Section E3602.12; branch circuits serving room air conditioners

Authority: IC 22-13-2-2; IC 22-13-2-13
Affected: IC 22-12; IC 22-13; IC 22-14; IC 22-15; IC 36-7

Sec. 224. In SECTION E3602.12, Item 4, delete "or the rating of the branch-circuit conductors". *(Fire Prevention and Building Safety Commission; 675 IAC 14-4.3-224; filed Jun 13, 2005, 3:00 p.m.: 28 IR 3298, eff 90 days after filing with the*

Secretary of State; readopted filed Aug 4, 2011, 8:35 a.m.: 20110831-IR-675110254RFA)

675 IAC 14-4.3-225 Section E3602.12.1; where no other loads are supplied

Authority: IC 22-13-2-2; IC 22-13-2-13
Affected: IC 22-12; IC 22-13; IC 22-14; IC 22-15; IC 36-7

Sec. 225. In SECTION E3602.12.1, delete "appliances are also supplied" and insert "loads are supplied". *(Fire Prevention and Building Safety Commission; 675 IAC 14-4.3-225; filed Jun 13, 2005, 3:00 p.m.: 28 IR 3299, eff 90 days after filing with the Secretary of State; readopted filed Aug 4, 2011, 8:35 a.m.: 20110831-IR-675110254RFA)*

675 IAC 14-4.3-226 Section E3602.12.2; where lighting units or other appliances are also supplied

Authority: IC 22-13-2-2; IC 22-13-2-13
Affected: IC 22-12; IC 22-13; IC 22-14; IC 22-15; IC 36-7

Sec. 226. Delete the text of SECTION E3602.12.2 and substitute: The total marked rating of a cord-and-attachment-plug-connected room air conditioner shall not exceed 50 percent of the rating of a branch circuit where lighting outlets, other appliances, or general use receptacles are also supplied. Where the circuitry is interlocked to prevent simultaneous operation of the room air conditioner and energization of other outlets on the same branch circuit, a cord-and-attachment-plug-connected room air conditioner shall not exceed 80 percent of the branch-circuit rating. *(Fire Prevention and Building Safety Commission; 675 IAC 14-4.3-226; filed Jun 13, 2005, 3:00 p.m.: 28 IR 3299, eff 90 days after filing with the Secretary of State; readopted filed Aug 4, 2011, 8:35 a.m.: 20110831-IR-675110254RFA)*

675 IAC 14-4.3-226.2 Section E3603.1; branch circuits for heating

Authority: IC 22-13-2-2; IC 22-13-2-13
Affected: IC 22-12; IC 22-13; IC 22-14; IC 22-15; IC 36-7

Sec. 226.2. Add an exception to the end of SECTION E3603.1 to read as follows: Exception: Permanently connected air-conditioning equipment shall be permitted to be connected to the same branch circuit. *(Fire Prevention and Building Safety Commission; 675 IAC 14-4.3-226.2; filed Oct 21, 2005, 1:50 p.m.: 29 IR 808; readopted filed Aug 4, 2011, 8:35 a.m.: 20110831-IR-675110254RFA)*

675 IAC 14-4.3-227 Section E3604.4; feeder neutral load

Authority: IC 22-13-2-2; IC 22-13-2-13
Affected: IC 22-12; IC 22-13; IC 22-14; IC 22-15; IC 36-7

Sec. 227. Add a sentence to the end of SECTION 3604.4 to read as follows: "A further demand factor of 70 percent shall be permitted for that portion of the unbalanced load in excess of 200 amps.". *(Fire Prevention and Building Safety Commission; 675 IAC 14-4.3-227; filed Jun 13, 2005, 3:00 p.m.: 28 IR 3299, eff 90 days after filing with the Secretary of State; readopted filed Aug 4, 2011, 8:35 a.m.: 20110831-IR-675110254RFA)*

675 IAC 14-4.3-227.1 Table E3701.4; allowable applications for wiring methods

Authority: IC 22-13-2-2; IC 22-13-2-13
Affected: IC 22-12; IC 22-13; IC 22-14; IC 22-15; IC 36-7

Sec. 227.1. In TABLE E3701.4, the sixteenth line, labeled "Run exposed and subject to physical damage", of the third column, labeled "EMT", delete "--" and insert "A". *(Fire Prevention and Building Safety Commission; 675 IAC 14-4.3-227.1; filed Oct 21, 2005, 1:50 p.m.: 29 IR 808; filed Mar 6, 2008, 11:13 a.m.: 20080402-IR-675070483FRA; readopted filed Aug 4, 2011, 8:35 a.m.: 20110831-IR-675110254RFA)*

675 IAC 14-4.3-227.3 Section E3701.5; isolation from gas piping

Authority: IC 22-13-2-2; IC 22-13-2-13
Affected: IC 22-12; IC 22-13; IC 22-14; IC 22-15; IC 36-7

Sec. 227.3. Add a title and the text to Section E3701.5 to read as follows: E3701.5 Isolation from corrugated stainless steel tubing. All wiring methods shall be isolated from corrugated stainless steel tubing by a space separation of at least 2 inches (51 mm). See also Section G2411.1. *(Fire Prevention and Building Safety Commission; 675 IAC 14-4.3-227.3; filed Mar 6, 2008, 11:13 a.m.: 20080402-IR-675070483FRA; readopted filed Aug 4, 2011, 8:35 a.m.: 20110831-IR-675110254RFA)*

675 IAC 14-4.3-227.5 Section E3702.4; in unfinished basements

Authority: IC 22-13-2-2; IC 22-13-2-13
Affected: IC 22-12; IC 22-13; IC 22-14; IC 22-15; IC 36-7

Sec. 227.5. At the end of SECTION E3702.4, add the following: NM cable used on a wall of an unfinished basement shall be installed in a listed conduit or tubing. Conduit or tubing shall utilize a nonmetallic bushing or adapter at the point the cable enters the raceway. Metal conduit and tubings and metal outlet boxes shall be grounded. *(Fire Prevention and Building Safety Commission; 675 IAC 14-4.3-227.5; filed Oct 21, 2005, 1:50 p.m.: 29 IR 808; readopted filed Aug 4, 2011, 8:35 a.m.: 20110831-IR-675110254RFA)*

675 IAC 14-4.3-227.6 Section E3703.3; grounding

Authority: IC 22-13-2-2; IC 22-13-2-13
Affected: IC 22-12; IC 22-13; IC 22-14; IC 22-15; IC 36-7

Sec. 227.6. Delete SECTION E3703.3 without substitution. *(Fire Prevention and Building Safety Commission; 675 IAC 14-4.3-227.6; filed Oct 21, 2005, 1:50 p.m.: 29 IR 808; readopted filed Aug 4, 2011, 8:35 a.m.: 20110831-IR-675110254RFA)*

675 IAC 14-4.3-228 Section E3703.4; protection from damage

Authority: IC 22-13-2-2; IC 22-13-2-13
Affected: IC 22-12; IC 22-13; IC 22-14; IC 22-15; IC 36-7

Sec. 228. Delete the third sentence of SECTION E3703.4 without substitution. *(Fire Prevention and Building Safety Commission; 675 IAC 14-4.3-228; filed Jun 13, 2005, 3:00 p.m.: 28 IR 3299, eff 90 days after filing with the Secretary of State; filed Oct 21, 2005, 1:50 p.m.: 29 IR 808; readopted filed Aug 4, 2011, 8:35 a.m.: 20110831-IR-675110254RFA)*

675 IAC 14-4.3-229 Figure E3801.4; countertop receptacles

Authority: IC 22-13-2-2; IC 22-13-2-13
Affected: IC 22-12; IC 22-13; IC 22-14; IC 22-15; IC 36-7

Sec. 229. Change FIGURE E3801.4 as follows: Add to FIGURE E3801.4 text to read "GFCI" next to the receptacle for the island countertop. *(Fire Prevention and Building Safety Commission; 675 IAC 14-4.3-229; filed Jun 13, 2005, 3:00 p.m.: 28 IR 3299, eff 90 days after filing with the Secretary of State; readopted filed Aug 4, 2011, 8:35 a.m.: 20110831-IR-675110254RFA)*

675 IAC 14-4.3-229.5 Section E3801.4.1; wall counter space

Authority: IC 22-13-2-2; IC 22-13-2-13
Affected: IC 22-12; IC 22-13; IC 22-14; IC 22-15; IC 36-7

Sec. 229.5. (a) After SECTION E3801.4.1, add an exception to read as follows: Exception: Receptacle outlets shall not be required on a wall directly behind a range or sink in the installation described in FIGURE E3801.4.1.

(b) After SECTION E3801.4.1, add FIGURE E3801.4.1 as follows:

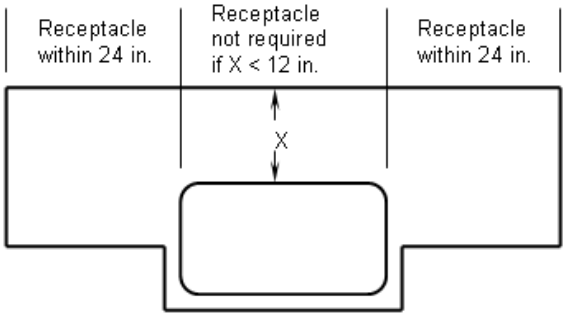

Sink or range extending from face of counter

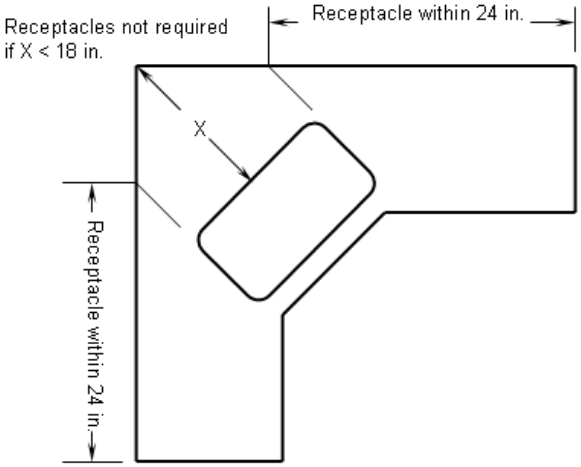

Sink or range mounted in corner

FIGURE E3801.4.1

(Fire Prevention and Building Safety Commission; 675 IAC 14-4.3-229.5; filed Oct 21, 2005, 1:50 p.m.: 29 IR 809; readopted filed Aug 4, 2011, 8:35 a.m.: 20110831-IR-675110254RFA)

675 IAC 14-4.3-230 Section E3801.4.5; receptacle outlet location

Authority: IC 22-13-2-2; IC 22-13-2-13
Affected: IC 22-12; IC 22-13; IC 22-14; IC 22-15; IC 36-7

Sec. 230. Change the first sentence of SECTION E3801.4.5 to read as follows: Receptacle outlets shall be located above, but not more than 20 inches (508 mm) above the countertop. *(Fire Prevention and Building Safety Commission; 675 IAC 14-4.3-230; filed Jun 13, 2005, 3:00 p.m.: 28 IR 3299, eff 90 days after filing with the Secretary of State; readopted filed Aug 4, 2011, 8:35 a.m.: 20110831-IR-675110254RFA)*

675 IAC 14-4.3-231 Section E3801.6; bathroom

Authority: IC 22-13-2-2; IC 22-13-2-13
Affected: IC 22-12; IC 22-13; IC 22-14; IC 22-15; IC 36-7

Sec. 231. (a) In SECTION E3801.6, delete the second sentence and substitute: The receptacle outlet shall be located on a wall or partition that is adjacent to the basin or basin countertop.

(b) Add an exception to SECTION E3801.6 to read as follows: Exception: The receptacle shall not be required to be mounted in the wall or partition where it is installed on the side or face of the basin cabinet not more than 12 inches below the countertop. *(Fire Prevention and Building Safety Commission; 675 IAC 14-4.3-231; filed Jun 13, 2005, 3:00 p.m.: 28 IR 3299, eff 90 days after filing with the Secretary of State; filed Oct 21, 2005, 1:50 p.m.: 29 IR 809; readopted filed Aug 4, 2011, 8:35 a.m.: 20110831-IR-675110254RFA)*

675 IAC 14-4.3-232 Section E3801.9; basements and garages

Authority: IC 22-13-2-2; IC 22-13-2-13
Affected: IC 22-12; IC 22-13; IC 22-14; IC 22-15; IC 36-7

Sec. 232. In the last sentence of SECTION E3801.9, delete "in the unfinished portion" and substitute "in each separate unfinished portion". *(Fire Prevention and Building Safety Commission; 675 IAC 14-4.3-232; filed Jun 13, 2005, 3:00 p.m.: 28 IR 3299, eff 90 days after filing with the Secretary of State; readopted filed Aug 4, 2011, 8:35 a.m.: 20110831-IR-675110254RFA)*

675 IAC 14-4.3-233 Section E3801.11; HVAC outlet

Authority: IC 22-13-2-2; IC 22-13-2-13
Affected: IC 22-12; IC 22-13; IC 22-14; IC 22-15; IC 36-7

Sec. 233. Change the last sentence of Section E3801.11 to read as follows: The receptacle outlet shall not be connected to the load side of the HVAC equipment disconnecting means, and crawlspace receptacles shall be protected in accordance with Section E3802.4. *(Fire Prevention and Building Safety Commission; 675 IAC 14-4.3-233; filed Jun 13, 2005, 3:00 p.m.: 28 IR 3299, eff 90 days after filing with the Secretary of State; filed Oct 21, 2005, 1:50 p.m.: 29 IR 809; filed Mar 6, 2008, 11:13 a.m.: 20080402-IR-675070483FRA; readopted filed Aug 4, 2011, 8:35 a.m.: 20110831-IR-675110254RFA)*

675 IAC 14-4.3-233.3 Section E3802.4; crawlspace receptacles

Authority: IC 22-13-2-2; IC 22-13-2-13
Affected: IC 22-12; IC 22-13; IC 22-14; IC 22-15; IC 36-7

Sec. 233.3. Add an exception to Section E3802.4 to read as follows: Single receptacles that serve sump pumps. *(Fire Prevention and Building Safety Commission; 675 IAC 14-4.3-233.3; filed Mar 6, 2008, 11:13 a.m.: 20080402-IR-675070483FRA; readopted filed Aug 4, 2011, 8:35 a.m.: 20110831-IR-675110254RFA)*

675 IAC 14-4.3-233.5 Section E3802.7; bar sink receptacles

Authority: IC 22-13-2-2; IC 22-13-2-13
Affected: IC 22-12; IC 22-13; IC 22-14; IC 22-15; IC 36-7

Sec. 233.5. (a) In the title of SECTION E3802.7, before "bar sink receptacles", insert "laundry, utility, and wet".

(b) Change the first sentence of SECTION E3802.7 to read as follows: All 125-volt, single-phase, 15- and 20-ampere receptacles that are installed within 6 feet of the outside edge of a laundry, utility, or wet bar sink shall have ground-fault circuit-interrupter protection for personnel. *(Fire Prevention and Building Safety Commission; 675 IAC 14-4.3-233.5; filed Oct 21, 2005, 1:50 p.m.: 29 IR 809; readopted filed Aug 4, 2011, 8:35 a.m.: 20110831-IR-675110254RFA)*

675 IAC 14-4.3-234 Section E3802.8; boathouse receptacles

Authority: IC 22-13-2-2; IC 22-13-2-13
Affected: IC 22-12; IC 22-13; IC 22-14; IC 22-15; IC 36-7

Sec. 234. Change Section 3802.8 to read as follows: All 125-volt, single phase, 15- or 20-ampere receptacles and outlets that supply boat hoists and boathouses shall have ground-fault circuit-interrupter protection for personnel. *(Fire Prevention and Building Safety Commission; 675 IAC 14-4.3-234; filed Jun 13, 2005, 3:00 p.m.: 28 IR 3299, eff 90 days after filing with the*

Secretary of State; filed Oct 21, 2005, 1:50 p.m.: 29 IR 810; filed Mar 6, 2008, 11:13 a.m.: 20080402-IR-675070483FRA; readopted filed Aug 4, 2011, 8:35 a.m.: 20110831-IR-675110254RFA)

675 IAC 14-4.3-235 Section E3802.11; bedroom outlets

Authority: IC 22-13-2-2; IC 22-13-2-13
Affected: IC 22-12; IC 22-13; IC 22-14; IC 22-15; IC 36-7

Sec. 235. Delete SECTION E3802.11. *(Fire Prevention and Building Safety Commission; 675 IAC 14-4.3-235; filed Jun 13, 2005, 3:00 p.m.: 28 IR 3300, eff 90 days after filing with the Secretary of State; filed Oct 21, 2005, 1:50 p.m.: 29 IR 810; readopted filed Aug 4, 2011, 8:35 a.m.: 20110831-IR-675110254RFA)*

675 IAC 14-4.3-236 Section E3803.3; additional locations (Repealed)

Sec. 236. *(Repealed by Fire Prevention and Building Safety Commission; filed Mar 6, 2008, 11:13 a.m.: 20080402-IR-675070483FRA)*

675 IAC 14-4.3-237 Section E3805.1; box, conduit body, or fitting; where required

Authority: IC 22-13-2-2; IC 22-13-2-13
Affected: IC 22-12; IC 22-13; IC 22-14; IC 22-15; IC 36-7

Sec. 237. In the first sentence of SECTION E3805.1, after "junction point", insert ", termination point". *(Fire Prevention and Building Safety Commission; 675 IAC 14-4.3-237; filed Jun 13, 2005, 3:00 p.m.: 28 IR 3300, eff 90 days after filing with the Secretary of State; readopted filed Aug 4, 2011, 8:35 a.m.: 20110831-IR-675110254RFA)*

675 IAC 14-4.3-238 Section E3805.3.1; nonmetallic-sheathed cable and nonmetallic boxes

Authority: IC 22-13-2-2; IC 22-13-2-13
Affected: IC 22-12; IC 22-13; IC 22-14; IC 22-15; IC 36-7

Sec. 238. In SECTION E3805.3.1, after "Where nonmetallic-sheathed cable", insert "or multiconductor Type UF cable" and, after "¼ inch (6.4 mm)", insert "and beyond any cable clamp". *(Fire Prevention and Building Safety Commission; 675 IAC 14-4.3-238; filed Jun 13, 2005, 3:00 p.m.: 28 IR 3300, eff 90 days after filing with the Secretary of State; readopted filed Aug 4, 2011, 8:35 a.m.: 20110831-IR-675110254RFA)*

675 IAC 14-4.3-239 Section E3805.3.2; securing to box

Authority: IC 22-13-2-2; IC 22-13-2-13
Affected: IC 22-12; IC 22-13; IC 22-14; IC 22-15; IC 36-7

Sec. 239. In SECTION E3805.3.2, in the exception, after "Where nonmetallic-sheathed", insert "or multiconductor Type UF" and, at the end of the exception, insert "Multiple cable entries shall be permitted in a single cable knockout opening". *(Fire Prevention and Building Safety Commission; 675 IAC 14-4.3-239; filed Jun 13, 2005, 3:00 p.m.: 28 IR 3300, eff 90 days after filing with the Secretary of State; readopted filed Aug 4, 2011, 8:35 a.m.: 20110831-IR-675110254RFA)*

675 IAC 14-4.3-239.5 Section E3805.12.2.1; conductor fill

Authority: IC 22-13-2-2; IC 22-13-2-13
Affected: IC 22-12; IC 22-13; IC 22-14; IC 22-15; IC 36-7

Sec. 239.5. After the first sentence of SECTION E3505.12.2.1, insert a new sentence to read as follows: A looped, unbroken conductor not less than twice the minimum length required for free conductors in SECTION E3306.10.3 shall be counted twice. *(Fire Prevention and Building Safety Commission; 675 IAC 14-4.3-239.5; filed Oct 21, 2005, 1:50 p.m.: 29 IR 810; readopted*

filed Aug 4, 2011, 8:35 a.m.: 20110831-IR-675110254RFA)

675 IAC 14-4.3-240 Section E3806.5; in wall or ceiling

Authority: IC 22-13-2-2; IC 22-13-2-13
Affected: IC 22-12; IC 22-13; IC 22-14; IC 22-15; IC 36-7

Sec. 240. In SECTION E3806.5, in the first sentence, after "tile", insert ", gypsum, plaster" and, in the second sentence, after "combustible", insert "surface". *(Fire Prevention and Building Safety Commission; 675 IAC 14-4.3-240; filed Jun 13, 2005, 3:00 p.m.: 28 IR 3300, eff 90 days after filing with the Secretary of State; readopted filed Aug 4, 2011, 8:35 a.m.: 20110831-IR-675110254RFA)*

675 IAC 14-4.3-241 Section E3806.8.2.1; nails and screws

Authority: IC 22-13-2-2; IC 22-13-2-13
Affected: IC 22-12; IC 22-13; IC 22-14; IC 22-15; IC 36-7

Sec. 241. (a) Change the title of SECTION E3806.8.2.1 to "Nails and screws". In the text, delete "Nails" and insert "Nails and screws".

(b) Add a new sentence at the end of SECTION E3806.8.2.1 to read as follows: Screws shall not be permitted to pass through the box unless exposed threads in the box are protected using approved means to avoid abrasion of conductor insulation. *(Fire Prevention and Building Safety Commission; 675 IAC 14-4.3-241; filed Jun 13, 2005, 3:00 p.m.: 28 IR 3300, eff 90 days after filing with the Secretary of State; filed Oct 21, 2005, 1:50 p.m.: 29 IR 810; readopted filed Aug 4, 2011, 8:35 a.m.: 20110831-IR-675110254RFA)*

675 IAC 14-4.3-241.5 Section E3807.2; damp or wet locations

Authority: IC 22-13-2-2; IC 22-13-2-13
Affected: IC 22-12; IC 22-13; IC 22-14; IC 22-15; IC 36-7

Sec. 241.5. (a) At the end of SECTION E3807.2, add a new sentence to read as follows: For enclosures in wet locations, raceways or cables entering above the level of uninsulated live parts shall use fittings listed for wet locations.

(b) Add an exception to SECTION E3807.2 to read as follows: Exception: Nonmetallic enclosures shall be permitted to be installed without the airspace on a concrete, masonry, tile, or similar surface. *(Fire Prevention and Building Safety Commission; 675 IAC 14-4.3-241.5; filed Oct 21, 2005, 1:50 p.m.: 29 IR 810; readopted filed Aug 4, 2011, 8:35 a.m.: 20110831-IR-675110254RFA)*

675 IAC 14-4.3-242 Section E3807.7; cables

Authority: IC 22-13-2-2; IC 22-13-2-13
Affected: IC 22-12; IC 22-13; IC 22-14; IC 22-15; IC 36-7

Sec. 242. (a) At the end of item 6, in the exception, delete ", the applicable article".

(b) After item 6 of the exception, add item 7 and Table E3807.8 to read as follows: The allowable cable fill shall not exceed that permitted by Table E3807.8. A multiconductor cable having two or more conductors shall be treated as a single conductor for calculating the percentage of conduit fill area. For cables that have elliptical cross sections, the cross-sectional area calculation shall be based on the major diameter of the ellipse as a circle diameter.

TABLE E3807.8

PERCENT OF CROSS SECTION OF CONDUIT AND TUBING FOR CONDUCTORS

NUMBER OF CONDUCTORS	MAXIMUM PERCENT OF CONDUIT AND TUBING AREA FILLED BY CONDUCTORS
1	53
2	31

Over 2	40

(Fire Prevention and Building Safety Commission; 675 IAC 14-4.3-242; filed Jun 13, 2005, 3:00 p.m.: 28 IR 3300, eff 90 days after filing with the Secretary of State; filed Oct 21, 2005, 1:50 p.m.: 29 IR 810; filed Mar 6, 2008, 11:13 a.m.: 20080402-IR-675070483FRA; readopted filed Aug 4, 2011, 8:35 a.m.: 20110831-IR-675110254RFA)

675 IAC 14-4.3-243 Section E3808.7; load side equipment

Authority: IC 22-13-2-2; IC 22-13-2-13
Affected: IC 22-12; IC 22-13; IC 22-14; IC 22-15; IC 36-7

Sec. 243. Add Exception 2 to Section E3808.7 to read as follows: Exception 2. It shall be permissible to ground meter enclosures by connection to the grounded circuit conductor on the load-side of the service if:

(1) all meter enclosures are located immediately adjacent to the service disconnecting means; and

(2) the size of the grounded circuit conductor is not smaller than the size specified in TABLE E3808.12 for equipment grounding conductors.

(Fire Prevention and Building Safety Commission; 675 IAC 14-4.3-243; filed Jun 13, 2005, 3:00 p.m.: 28 IR 3300, eff 90 days after filing with the Secretary of State; filed Mar 6, 2008, 11:13 a.m.: 20080402-IR-675070483FRA; readopted filed Aug 4, 2011, 8:35 a.m.: 20110831-IR-675110254RFA)

675 IAC 14-4.3-244 Section E3808.8; types of equipment grounding conductors

Authority: IC 22-13-2-2; IC 22-13-2-13
Affected: IC 22-12; IC 22-13; IC 22-14; IC 22-15; IC 36-7

Sec. 244. In SECTION E3808.8, delete the first sentence in Item 1 and insert "A copper, aluminum, or copper-clad aluminum conductor". *(Fire Prevention and Building Safety Commission; 675 IAC 14-4.3-244; filed Jun 13, 2005, 3:00 p.m.: 28 IR 3300, eff 90 days after filing with the Secretary of State; readopted filed Aug 4, 2011, 8:35 a.m.: 20110831-IR-675110254RFA)*

675 IAC 14-4.3-244.5 Section E3808.8.3; nonmetallic sheathed cable

Authority: IC 22-13-2-2; IC 22-13-2-13
Affected: IC 22-12; IC 22-13; IC 22-14; IC 22-15; IC 36-7

Sec. 244.5. (a) In the first sentence of SECTION E3808.8.3, delete "be permitted to" without substitution.

(b) Delete the second sentence of SECTION E3808.8.3 without substitution. *(Fire Prevention and Building Safety Commission; 675 IAC 14-4.3-244.5; filed Oct 21, 2005, 1:50 p.m.: 29 IR 810; readopted filed Aug 4, 2011, 8:35 a.m.: 20110831-IR-675110254RFA)*

675 IAC 14-4.3-245 Section E3901.3; indicating (Repealed)

Sec. 245. *(Repealed by Fire Prevention and Building Safety Commission; filed Oct 21, 2005, 1:50 p.m.: 29 IR 815)*

675 IAC 14-4.3-246 Section E3902.9; outdoor locations

Authority: IC 22-13-2-2; IC 22-13-2-13
Affected: IC 22-12; IC 22-13; IC 22-14; IC 22-15; IC 36-7

Sec. 246. Delete SECTION E3902.9 without substitution. *(Fire Prevention and Building Safety Commission; 675 IAC 14-4.3-246; filed Jun 13, 2005, 3:00 p.m.: 28 IR 3301, eff 90 days after filing with the Secretary of State; readopted filed Aug 4, 2011, 8:35 a.m.: 20110831-IR-675110254RFA)*

675 IAC 14-4.3-247 Section E3902.10; exterior wet locations

Authority: IC 22-13-2-2; IC 22-13-2-13
Affected: IC 22-12; IC 22-13; IC 22-14; IC 22-15; IC 36-7

Sec. 247. (a) Delete the title of SECTION E3902.10 and substitute "Exterior wet locations".

(b) In the first sentence of SECTION E3902.10, delete "other than outdoors" without substitution. *(Fire Prevention and Building Safety Commission; 675 IAC 14-4.3-247; filed Jun 13, 2005, 3:00 p.m.: 28 IR 3301, eff 90 days after filing with the Secretary of State; filed Oct 21, 2005, 1:50 p.m.: 29 IR 811; readopted filed Aug 4, 2011, 8:35 a.m.: 20110831-IR-675110254RFA)*

675 IAC 14-4.3-247.5 Section E3902.11; bathtub and shower space

Authority: IC 22-13-2-2; IC 22-13-2-13
Affected: IC 22-12; IC 22-13; IC 22-14; IC 22-15; IC 36-7

Sec. 247.5. Change SECTION E3902.11 to read as follows: A receptacle shall not be installed within or directly over a bathtub or shower stall. *(Fire Prevention and Building Safety Commission; 675 IAC 14-4.3-247.5; filed Oct 21, 2005, 1:50 p.m.: 29 IR 811; readopted filed Aug 4, 2011, 8:35 a.m.: 20110831-IR-675110254RFA)*

675 IAC 14-4.3-248 Section E3902.13; outdoor installation

Authority: IC 22-13-2-2; IC 22-13-2-13
Affected: IC 22-12; IC 22-13; IC 22-14; IC 22-15; IC 36-7

Sec. 248. Delete SECTION E3902.13 without substitution. *(Fire Prevention and Building Safety Commission; 675 IAC 14-4.3-248; filed Jun 13, 2005, 3:00 p.m.: 28 IR 3301, eff 90 days after filing with the Secretary of State; readopted filed Aug 4, 2011, 8:35 a.m.: 20110831-IR-675110254RFA)*

675 IAC 14-4.3-248.5 Section E3903.10; bathtub and shower areas

Authority: IC 22-13-2-2; IC 22-13-2-13
Affected: IC 22-12; IC 22-13; IC 22-14; IC 22-15; IC 36-7

Sec. 248.5. After the last sentence in SECTION E3903.10, add a new sentence to read as follows: Luminaires located in this zone shall be listed for damp locations or listed for wet locations where subject to shower spray. *(Fire Prevention and Building Safety Commission; 675 IAC 14-4.3-248.5; filed Oct 21, 2005, 1:50 p.m.: 29 IR 811; readopted filed Aug 4, 2011, 8:35 a.m.: 20110831-IR-675110254RFA)*

675 IAC 14-4.3-249 Section E3903.11; fixtures in clothes closets

Authority: IC 22-13-2-2; IC 22-13-2-13
Affected: IC 22-12; IC 22-13; IC 22-14; IC 22-15; IC 36-7

Sec. 249. In SECTION E3903.11, in Item 4, delete "on". *(Fire Prevention and Building Safety Commission; 675 IAC 14-4.3-249; filed Jun 13, 2005, 3:00 p.m.: 28 IR 3301, eff 90 days after filing with the Secretary of State; readopted filed Aug 4, 2011, 8:35 a.m.: 20110831-IR-675110254RFA)*

675 IAC 14-4.3-249.5 Section E4103.1.3; GFCI protection

Authority: IC 22-13-2-2; IC 22-13-2-13
Affected: IC 22-12; IC 22-13; IC 22-14; IC 22-15; IC 36-7

Sec. 249.5. Add a new sentence to the end of SECTION E4103.1.3 to read as follows: Receptacles that supply pool pump motors and that are rated 15 or 20 amperes, 125 volts through 250 volts, single phase, shall be provided with GFCI protection. *(Fire Prevention and Building Safety Commission; 675 IAC 14-4.3-249.5; filed Oct 21, 2005, 1:50 p.m.: 29 IR 811; readopted filed Aug*

4, 2011, 8:35 a.m.: 20110831-IR-675110254RFA)

675 IAC 14-4.3-250 Table E4103.5; overhead conductor clearances

Authority: IC 22-13-2-2; IC 22-13-2-13
Affected: IC 22-12; IC 22-13; IC 22-14; IC 22-15; IC 36-7

Sec. 250. In TABLE E4103.5, in the second column, delete "22" and substitute "22.5" and delete "14" and substitute "14.5". *(Fire Prevention and Building Safety Commission; 675 IAC 14-4.3-250; filed Jun 13, 2005, 3:00 p.m.: 28 IR 3301, eff 90 days after filing with the Secretary of State; readopted filed Aug 4, 2011, 8:35 a.m.: 20110831-IR-675110254RFA)*

675 IAC 14-4.3-251 Section E4104.1; bonded parts (Repealed)

Sec. 251. *(Repealed by Fire Prevention and Building Safety Commission; filed Oct 21, 2005, 1:50 p.m.: 29 IR 815)*

675 IAC 14-4.3-251.1 Section E4104.1; bonded parts

Authority: IC 22-13-2-2; IC 22-13-2-13
Affected: IC 22-12; IC 22-13; IC 22-14; IC 22-15; IC 36-7

Sec. 251.1. In the last sentence of Section E4104.1, item 1, after "made", insert "in accordance with Section E4104.3, Item 1.3" and, in the same sentence, delete "eliminate" and substitute "reduce". *(Fire Prevention and Building Safety Commission; 675 IAC 14-4.3-251.1; filed Mar 6, 2008, 11:13 a.m.: 20080402-IR-675070483FRA; readopted filed Aug 4, 2011, 8:35 a.m.: 20110831-IR-675110254RFA)*

675 IAC 14-4.3-251.5 Section E4104.3; methods of bonding

Authority: IC 22-13-2-2; IC 22-13-2-13
Affected: IC 22-12; IC 22-13; IC 22-14; IC 22-15; IC 36-7

Sec. 251.5. (a) In the first sentence of Section E4104.3, delete "eliminate" and substitute "reduce".

(b) Delete the title and text of Section E4104.3, item 1, and substitute to read as follows: 1. Equipotential Bonding Grid. The parts specified in Section E4104.1 above shall be connected to an equipotential bonding grid with a solid copper conductor, insulated, covered, or bare, not smaller than 8 AWG or rigid metal conduit of brass or other identified corrosion-resistant metal conduit. Connections shall be made by exothermic welding or by listed pressure connectors or clamps that are labeled as being suitable for the purpose and are of stainless steel, brass, copper, or copper alloy. The equipotential bonding grid shall conform to the contours of the pool and shall extend within concrete or under other conductive paved, or under unpaved walking surfaces for 3 feet (914 mm) horizontally beyond the inside walls of the pool and shall be permitted to be any of the following:

1.1 Structural Reinforcing Steel. The structural reinforcing within a concrete pool shell or deck. Where deck reinforcing steel is not an integral part of the pool and its reinforcing, the deck reinforcing steel shall be bonded to other parts of the bonding grid at a minimum of four points uniformly spaced around the pool perimeter using a minimum 8 AWG solid copper conductor. Reinforcing steel shall not extend into soil beyond the concrete envelope.

1.2 Bolted or Welded Metal Pools. The wall of a bolted or welded metal pool.

1.3 Alternate Means. This system shall be permitted to be constructed as specified in (i) through (iii):

(i) Materials and Connections. The grid shall be constructed of minimum 8 AWG bare solid copper conductors. Conductors shall be bonded to each other at all points of crossing. Connections shall be made in accordance with item 1 above.

(ii) Grid Structure. The grid shall be arranged in a perpendicular grid pattern with 12 inches (305 mm) between conductors with tolerance of 4 inches (102 mm).

(iii) Securing. The grid shall be secured within concrete pool and deck material or under other conductive pool and deck material.

Exception: The equipotential bonding grid shall not be required to be installed under the bottom of or vertically

along the walls of vinyl lined polymer wall, fiberglass composite, or other pools constructed of nonconductive materials. The equipotential bonding grid shall not be required to be installed under pool decks of nonconductive materials. Any metal parts of the pool, including metal structural supports, shall be bonded in accordance with E4104.1. For the purposes of this section, poured concrete, pneumatically applied (sprayed) concrete, and concrete block, with painted or plastered coatings, shall be considered conductive material. Asphalt, flagstone, brick, tile, and concrete pavers are examples of conductive deck paving materials.

(Fire Prevention and Building Safety Commission; 675 IAC 14-4.3-251.5; filed Mar 6, 2008, 11:13 a.m.: 20080402-IR-675070483FRA; readopted filed Aug 4, 2011, 8:35 a.m.: 20110831-IR-675110254RFA)

675 IAC 14-4.3-251.6 Section E4104.4; pool water

Authority: IC 22-13-2-2; IC 22-13-2-13
Affected: IC 22-12; IC 22-13; IC 22-14; IC 22-15; IC 36-7

Sec. 251.6. Add title and text of Section E4104.4 to read as follows: E4104.4 Pool water. An intentional bond of a minimum conductive surface area of nine square inches shall be installed in contact with the pool water. This bond shall be permitted to consist of parts that are required to be bonded in Section E4104.1. *(Fire Prevention and Building Safety Commission; 675 IAC 14-4.3-251.6; filed Mar 6, 2008, 11:13 a.m.: 20080402-IR-675070483FRA; readopted filed Aug 4, 2011, 8:35 a.m.: 20110831-IR-675110254RFA)*

675 IAC 14-4.3-252 Section E4106.8.2; other enclosures (Repealed)

Sec. 252. *(Repealed by Fire Prevention and Building Safety Commission; filed Oct 21, 2005, 1:50 p.m.: 29 IR 815)*

675 IAC 14-4.3-253 Section E4106.10; electrically operated pool covers (Repealed)

Sec. 253. *(Repealed by Fire Prevention and Building Safety Commission; filed Oct 21, 2005, 1:50 p.m.: 29 IR 815)*

675 IAC 14-4.3-254 Section E4106.12.2; permanently wired radiant heaters

Authority: IC 22-13-2-2; IC 22-13-2-13
Affected: IC 22-12; IC 22-13; IC 22-14; IC 22-15; IC 36-7

Sec. 254. In SECTION E4106.12.2, after the second sentence, delete the period and insert "unless otherwise approved.". *(Fire Prevention and Building Safety Commission; 675 IAC 14-4.3-254; filed Jun 13, 2005, 3:00 p.m.: 28 IR 3301, eff 90 days after filing with the Secretary of State; readopted filed Aug 4, 2011, 8:35 a.m.: 20110831-IR-675110254RFA)*

675 IAC 14-4.3-254.5 Section E4107.2; ground-fault circuit-interrupters required

Authority: IC 22-13-2-2; IC 22-13-2-13
Affected: IC 22-12; IC 22-13; IC 22-14; IC 22-15; IC 36-7

Sec. 254.5. Add a second paragraph at the end of SECTION E4107.2 to read as follows: All 125-volt receptacles located within 20 feet of the inside walls of a storable pool shall be protected by a ground-fault circuit interrupter. In determining these dimensions, the distance to be measured shall be the shortest path the supply cord of an appliance connected to the receptacle would follow without piercing a floor, wall, ceiling, doorway with hinged or sliding door, window opening, or other effective permanent barrier. *(Fire Prevention and Building Safety Commission; 675 IAC 14-4.3-254.5; filed Oct 21, 2005, 1:50 p.m.: 29 IR 811; readopted filed Aug 4, 2011, 8:35 a.m.: 20110831-IR-675110254RFA)*

675 IAC 14-4.3-254.7 Section E4107.4; receptacle locations

Authority: IC 22-13-2-2; IC 22-13-2-13
Affected: IC 22-12; IC 22-13; IC 22-14; IC 22-15; IC 36-7

Sec. 254.7. Add a new SECTION E4107.4; receptacle locations, with text to read as follows: Receptacles shall not be less than 10 feet from the inside walls of a pool. In determining these dimensions, the distance to be measured shall be the shortest path the supply cord of an appliance connected to the receptacle would follow without piercing a floor, wall, ceiling, doorway with hinged or sliding door, window opening, or other effective permanent barrier. *(Fire Prevention and Building Safety Commission; 675 IAC 14-4.3-254.7; filed Oct 21, 2005, 1:50 p.m.: 29 IR 811; readopted filed Aug 4, 2011, 8:35 a.m.: 20110831-IR-675110254RFA)*

675 IAC 14-4.3-255 Section E4201.2; definitions

Authority: IC 22-13-2-2; IC 22-13-2-13
Affected: IC 22-12; IC 22-13; IC 22-14; IC 22-15; IC 36-7

Sec. 255. In SECTION E4201.2, before the definition of Class 2 circuit, insert "ABANDONED CLASS 2 CABLE" and its definition to read as follows: Installed Class 2 cable that is not terminated at equipment and not identified for future use with a tag. *(Fire Prevention and Building Safety Commission; 675 IAC 14-4.3-255; filed Jun 13, 2005, 3:00 p.m.: 28 IR 3302, eff 90 days after filing with the Secretary of State; readopted filed Aug 4, 2011, 8:35 a.m.: 20110831-IR-675110254RFA)*

675 IAC 14-4.3-256 Section E4201.3; spread of fire or products of combustion

Authority: IC 22-13-2-2; IC 22-13-2-13
Affected: IC 22-12; IC 22-13; IC 22-14; IC 22-15; IC 36-7

Sec. 256. Add a new SECTION E4201.3 to the end of SECTION E4201 to read as follows: E4201.3 Spread of fire or products of combustion. The accessible portion of abandoned Class 2 cables shall not be permitted to remain. *(Fire Prevention and Building Safety Commission; 675 IAC 14-4.3-256; filed Jun 13, 2005, 3:00 p.m.: 28 IR 3302, eff 90 days after filing with the Secretary of State; readopted filed Aug 4, 2011, 8:35 a.m.: 20110831-IR-675110254RFA)*

675 IAC 14-4.3-257 Chapter 43; referenced standards

Authority: IC 22-13-2-2; IC 22-13-2-13
Affected: IC 22-12; IC 22-13; IC 22-14; IC 22-15; IC 36-7

Sec. 257. (a) Delete, in the first paragraph of Chapter 43, "Section 102.4" and substitute to read as follows: Section R101.

(b) Delete the following ASTM standards, including their associated code section citations from Chapter 43 of the 2003 International Residential Code:

C 1178-01	Specification for Glass Mat Water-resistant Gypsum Backing Panel
E 119-00a	Test Methods for Fire Tests of Building Construction and Materials
E 136-99	Test Method for Behavior of Materials in a Vertical Tube Furnace at 750 Degree C
E 814-00	Test Method for Fire Tests of Through-Penetration Firestops.

(c) Delete the following UL standard, including its associated code section citation from Chapter 43 of the 2003 International Residential Code:

1479-94	Fire Tests of Through-Penetration Firestops.

(d) Delete all of Chapter 43 of the 2006 International Residential Code except for the following standards and their associated code citations:

ACI 332-05	Requirements for Residential Concrete Construction
ASTM C 1178-04	Specification for Glass Mat Water-Resistant Gypsum Backing Panel
ASTM C 1288-01	Standard Specification for Discrete Non-asbestos Fiber-Cement Interior Substrate Sheets
ASTM 1325-04	Standard Specification for Non-asbestos Fiber-Mat Reinforced Cement Interior Substrate Sheets
ASTM D 6380-01	Standard Specification for Asphalt Roll Roofing (Organic Felt)
ASTM E 119-00a	Test Methods for Fire Tests of Building Construction and Materials
ASTM E 136-99e01	Test Method for Behavior of Materials in a Vertical Tube Furnace At 750 Degree C
ASTM E 814-02	Test Method for Fire Tests of Through-Penetration Firestops

ASTM E 1509-04	Standard Specification for Room Heaters, Pellet Fuel-burning Type
UL 508-99	Industrial Control Equipment
UL 1479-03	Fire Tests of Through-Penetration Firestops.

(Fire Prevention and Building Safety Commission; 675 IAC 14-4.3-257; filed Jun 13, 2005, 3:00 p.m.: 28 IR 3302, eff 90 days after filing with the Secretary of State; filed Mar 6, 2008, 11:13 a.m.: 20080402-IR-675070483FRA; readopted filed Aug 4, 2011, 8:35 a.m.: 20110831-IR-675110254RFA)

675 IAC 14-4.3-258 Appendix A; sizing and capacities of gas pipe

Authority: IC 22-13-2-2; IC 22-13-2-13
Affected: IC 22-12; IC 22-13; IC 22-14; IC 22-15; IC 36-7

Sec. 258. Delete APPENDIX A. *(Fire Prevention and Building Safety Commission; 675 IAC 14-4.3-258; filed Jun 13, 2005, 3:00 p.m.: 28 IR 3302, eff 90 days after filing with the Secretary of State; readopted filed Aug 4, 2011, 8:35 a.m.: 20110831-IR-675110254RFA)*

675 IAC 14-4.3-259 Appendix B; sizing of venting systems serving appliances equipped with draft hoods, Category 1 appliances, and appliances listed for use and Type B vents

Authority: IC 22-13-2-2; IC 22-13-2-13
Affected: IC 22-12; IC 22-13; IC 22-14; IC 22-15; IC 36-7

Sec. 259. Delete APPENDIX B. *(Fire Prevention and Building Safety Commission; 675 IAC 14-4.3-259; filed Jun 13, 2005, 3:00 p.m.: 28 IR 3302, eff 90 days after filing with the Secretary of State; readopted filed Aug 4, 2011, 8:35 a.m.: 20110831-IR-675110254RFA)*

675 IAC 14-4.3-260 Appendix C; exit terminals of mechanical draft and direct-vent systems

Authority: IC 22-13-2-2; IC 22-13-2-13
Affected: IC 22-12; IC 22-13; IC 22-14; IC 22-15; IC 36-7

Sec. 260. Delete APPENDIX C. *(Fire Prevention and Building Safety Commission; 675 IAC 14-4.3-260; filed Jun 13, 2005, 3:00 p.m.: 28 IR 3302, eff 90 days after filing with the Secretary of State; readopted filed Aug 4, 2011, 8:35 a.m.: 20110831-IR-675110254RFA)*

675 IAC 14-4.3-261 Appendix D; recommend procedure for safety inspection of an existing appliance installation

Authority: IC 22-13-2-2; IC 22-13-2-13
Affected: IC 22-12; IC 22-13; IC 22-14; IC 22-15; IC 36-7

Sec. 261. Delete APPENDIX D. *(Fire Prevention and Building Safety Commission; 675 IAC 14-4.3-261; filed Jun 13, 2005, 3:00 p.m.: 28 IR 3302, eff 90 days after filing with the Secretary of State; readopted filed Aug 4, 2011, 8:35 a.m.: 20110831-IR-675110254RFA)*

675 IAC 14-4.3-262 Appendix E; manufactured housing used as dwellings

Authority: IC 22-13-2-2; IC 22-13-2-13
Affected: IC 22-12; IC 22-13; IC 22-14; IC 22-15; IC 36-7

Sec. 262. (a) Change the second paragraph of AE101.1 General to read as follows: AE 101.2 Applicability. These provisions shall be applicable only to a manufactured home or mobile home used as a dwelling unit on privately owned (nonrental) lots and shall apply to the following:

1. Construction or alteration of any foundation system that is necessary to provide for the installation of a manufactured home unit.

2. Construction, installation, addition, or alteration of the building service equipment that is necessary for connecting manufactured homes to water, fuel, or power supplies and sewage systems.

3. Alterations or additions to existing manufactured homes. The construction, alteration, and use of accessory buildings and structures and their building service equipment shall comply with the applicable requirements of the Indiana Residential Code (675 IAC 14).

These provisions shall not be applicable to the design and factory construction of manufactured homes nor shall they be deemed to authorize either modifications or additions to manufactured homes.

(b) Change subsection AE102.1 to read as follows: Manufactured homes and their building service equipment to which additions or alterations are made shall comply with all of the applicable requirements of the Indiana Residential Code (675 IAC 14) for new facilities.

(c) Change the title and text of subsection AE102.2 to read as follows: AE102.2 Additions. Additions made to a manufactured home shall conform to the requirements of this code and all other applicable Indiana codes. Additions shall be structurally independent from the manufactured home.

EXCEPTION: Structural independence need not be provided when:

(1) structural calculations are provided to the building official confirming that the addition will not adversely affect the structural integrity of the manufactured home, or

(2) the manufacturer of the home confirms, in writing, that the home will safely support the structural loads imposed by the proposed addition.

(d) Add subsection AE102.2.1 to read as follows: AE102.2.1 Alterations. Alterations may be made to any manufactured home or to its building service equipment without requiring the existing manufactured home or its building service equipment to comply with all the requirements of these provisions, provided the alteration or additions conform to that required for new construction, and provided further that no hazard to life, health, or safety will be created by such additions or alterations.

(e) Delete subsection AE102.3 without substitution.

(f) Change subsection AE102.4 to read as follows: The use or occupancy of any manufactured home shall not be changed unless evidence is provided to show compliance with the applicable rules of the Fire Prevention and Building Safety Commission for the new use or occupancy and be released for construction when required by the General Administrative Rules (675 IAC 12).

(g) Delete AE102.5 without substitution.

(h) Change subsection AE301.1 to read as follows: Where required by local ordinance, a manufactured home shall not be installed or altered without first obtaining a permit.

(i) Change the title and text of subsection AE301.2 to read as follows: AE301.2 Additions and alterations to a manufactured home. Where required by local ordinance, a permit shall be obtained to alter, remodel, or add accessory buildings or structures to a manufactured home.

(j) Delete subsection AE301.3 without substitution.

(k) Delete subsection AE301.4 without substitution.

(l) Delete SECTION AE302 without substitution.

(m) Delete SECTION AE303 without substitution.

(n) Delete SECTION AE304 without substitution.

(o) Delete SECTION AE305 without substitution.

(p) Delete SECTION AE306 without substitution.

(q) Delete SECTION AE307 without substitution.

(r) Change SECTION AE402 to read as follows: Manufactured homes and their accessory buildings shall be located on the property in accordance with the applicable sections of the Indiana Residential Code (675 IAC 14) and the ordinances of the jurisdiction in which the home is sited.

(s) Change the exception in subsection AE501.1 to read as follows: EXCEPTION: When specifically approved by the building official, foundation and anchoring systems that are constructed in accordance with the methods specified in Section A600 of this code.

(t) Change the text of AE502.1 to read as follows: Foundation systems designed and constructed in accordance with this section shall be considered as a permanent installation. Where the manufacturer's installation instructions and foundation design details for the home are available, the foundation system shall be installed in accordance with those instructions.

(u) Change subsection AE502.5 to read as follows: Provisions shall be made for the control and drainage of surface water away from the manufactured home in accordance with SECTION 401.3 of this code.

(v) Change subsection AE504 to read as follows: Accessory structures shall not be structurally supported by a manufactured home.

EXCEPTION: Structural independence need not be provided when:

1. structural calculations are provided to the building official confirming that the addition will not adversely affect the structural integrity of the manufactured home, or

2. the manufacturer of the home confirms, in writing, that the home will safely support the structural loads imposed by the proposed accessory structure.

(w) Change SECTION AE505 to read as follows: The alteration, replacement, or addition to the building service equipment, other than that required for the initial installation of the manufactured home, shall conform to the regulations set forth in this code.

(x) Delete subsection AE506.2 without substitution.

(y) Change subsection AE507 to read as follows: Alterations made to a manufactured home subsequent to its initial installation shall conform to the occupancy, fire safety, and energy conservation requirements set forth in, or referenced by, the applicable rules of the Fire Prevention and Building Safety Commission.

(z) Change AE604.1 to read as follows: Ground Anchors. Ground anchors shall be designed and installed to transfer the anchoring loads to the ground. The ground anchors shall be sized and installed to the full depth and as specified in the manufacturer's installation manual and shall be installed in undisturbed soil.

(aa) Change subsection AE604.3 to read as follows: All anchoring equipment exposed to weathering shall have a resistance to weather deterioration at least equivalent to that provided by a coating of zinc on steel of not less than 0.625 ounces per square foot on each side of the surface coated.

(bb) Add a new SECTION AE701 Manufacturer's Installation Instructions to read as follows: Manufacturer's Installation Instructions. When the manufacturer's installation instructions are available, manufactured homes installed upon owned (nonrental) lots shall be installed per those installation instructions. *(Fire Prevention and Building Safety Commission; 675 IAC 14-4.3-262; filed Jun 13, 2005, 3:00 p.m.: 28 IR 3302, eff 90 days after filing with the Secretary of State; readopted filed Aug 4, 2011, 8:35 a.m.: 20110831-IR-675110254RFA)*

675 IAC 14-4.3-263 Appendix F; radon control methods

Authority: IC 22-13-2-2; IC 22-13-2-13
Affected: IC 22-12; IC 22-13; IC 22-14; IC 22-15; IC 36-7

Sec. 263. Delete APPENDIX F. *(Fire Prevention and Building Safety Commission; 675 IAC 14-4.3-263; filed Jun 13, 2005, 3:00 p.m.: 28 IR 3304, eff 90 days after filing with the Secretary of State; readopted filed Aug 4, 2011, 8:35 a.m.: 20110831-IR-675110254RFA)*

675 IAC 14-4.3-264 Appendix G; swimming pools, spas, and hot tubs

Authority: IC 22-13-2-2; IC 22-13-2-13
Affected: IC 22-12; IC 22-13; IC 22-14; IC 22-15; IC 36-7

Sec. 264. Delete APPENDIX G and substitute to read as follows: See the Indiana Swimming Pool Code (675 IAC 20). *(Fire Prevention and Building Safety Commission; 675 IAC 14-4.3-264; filed Jun 13, 2005, 3:00 p.m.: 28 IR 3304, eff 90 days after filing with the Secretary of State; readopted filed Aug 4, 2011, 8:35 a.m.: 20110831-IR-675110254RFA)*

675 IAC 14-4.3-265 Appendix H; patio covers

Authority: IC 22-13-2-2; IC 22-13-2-13
Affected: IC 22-12; IC 22-13; IC 22-14; IC 22-15; IC 36-7

Sec. 265. Delete APPENDIX H. *(Fire Prevention and Building Safety Commission; 675 IAC 14-4.3-265; filed Jun 13, 2005, 3:00 p.m.: 28 IR 3304, eff 90 days after filing with the Secretary of State; readopted filed Aug 4, 2011, 8:35 a.m.: 20110831-IR-*

675110254RFA)

675 IAC 14-4.3-266 Appendix I; private sewage disposal
Authority: IC 22-13-2-2; IC 22-13-2-13
Affected: IC 22-12; IC 22-13; IC 22-14; IC 22-15; IC 36-7

Sec. 266. Delete APPENDIX I. *(Fire Prevention and Building Safety Commission; 675 IAC 14-4.3-266; filed Jun 13, 2005, 3:00 p.m.: 28 IR 3304, eff 90 days after filing with the Secretary of State; readopted filed Aug 4, 2011, 8:35 a.m.: 20110831-IR-675110254RFA)*

675 IAC 14-4.3-267 Appendix J; existing buildings and structures
Authority: IC 22-13-2-2; IC 22-13-2-13
Affected: IC 22-12; IC 22-13; IC 22-14; IC 22-15; IC 36-7

Sec. 267. Delete APPENDIX J and substitute to read as follows: See the General Administrative Rules (675 IAC 12) and local ordinance. *(Fire Prevention and Building Safety Commission; 675 IAC 14-4.3-267; filed Jun 13, 2005, 3:00 p.m.: 28 IR 3304, eff 90 days after filing with the Secretary of State; readopted filed Aug 4, 2011, 8:35 a.m.: 20110831-IR-675110254RFA)*

675 IAC 14-4.3-268 Appendix K; sound transmission
Authority: IC 22-13-2-2; IC 22-13-2-13
Affected: IC 22-12; IC 22-13; IC 22-14; IC 22-15; IC 36-7

Sec. 268. Delete APPENDIX K. *(Fire Prevention and Building Safety Commission; 675 IAC 14-4.3-268; filed Jun 13, 2005, 3:00 p.m.: 28 IR 3304, eff 90 days after filing with the Secretary of State; readopted filed Aug 4, 2011, 8:35 a.m.: 20110831-IR-675110254RFA)*

675 IAC 14-4.3-269 Appendix L; ICC International Residential Electrical Provisions/National Electrical Code Cross Reference
Authority: IC 22-13-2-2; IC 22-13-2-13
Affected: IC 22-12; IC 22-13; IC 22-14; IC 22-15; IC 36-7

Sec. 269. Delete APPENDIX L. *(Fire Prevention and Building Safety Commission; 675 IAC 14-4.3-269; filed Jun 13, 2005, 3:00 p.m.: 28 IR 3304, eff 90 days after filing with the Secretary of State; readopted filed Aug 4, 2011, 8:35 a.m.: 20110831-IR-675110254RFA)*

675 IAC 14-4.3-270 Swimming pools; special provisions
Authority: IC 22-13-2-2
Affected: IC 22-12-1-5; IC 22-13-2-7; IC 22-13-2-11; IC 22-15; IC 36-7

Sec. 270. Section S4201-Special provisions is added as follows:
(1) S4201.1 Residential swimming pools are Class 2 structures according to IC 22-12-1-5. Enforcement of this rule is the responsibility of local units of government.
(2) S4201.2 The provisions of this rule are not intended to restrict the appropriate use of materials, equipment, or methods of design not specifically described in this rule.
(3) S4201.3 The enforcing official may require submission of evidence or proof that substantiates any claims made regarding the appropriate use of materials, equipment, or methods of design.
(4) S4201.4 This section shall not authorize a variance from or modification of any rule of the fire prevention and building safety commission except pursuant to variance authority provided for in IC 22-13-2-7 and IC 22-13-2-11.
(Fire Prevention and Building Safety Commission; 675 IAC 14-4.3-270; filed Mar 25, 2011, 10:19 a.m.: 20110420-IR-

675090789FRA; readopted filed Aug 4, 2011, 8:35 a.m.: 20110831-IR-675110254RFA)

675 IAC 14-4.3-271 Swimming pools; definitions

Authority: IC 22-13-2-2
Affected: IC 22-12-1-5; IC 22-13-2-7; IC 22-13-2-11; IC 22-15; IC 36-7-2-9; IC 36-8-17-9

Sec. 271. Section S4202-Definitions is added as follows:

(1) S4202.1 Definitions; general. For the purpose of this code, the definitions in this section apply throughout this chapter.

(2) S4202.2 Definitions "A"

(A) "Abrasion hazard" means a sharp or rough surface that could cause injury under normal use.

(B) "Accessible" means, when applied to a fixture, connection, appliance, or equipment, having access thereto, but may require the removal of an access panel, door, or similar obstruction. "Readily accessible" means direct access without the necessity of removing any panel, door, or similar obstruction.

(C) "Agitation" means the mechanical or manual movement to dislodge the filter aid and dirt from the filter element.

(D) "Airbreak" means a physical separation that may be a low inlet into the indirect waste receptor from the fixture, appliance, or device indirectly connected.

(E) "Air bump assist backwash" means, in a diatomite type filter, the compressing of a volume of air in the filter effluent chamber (by means of an air compressor or by the water pressure from the recirculating pump) that, when released, rapidly decompresses and forces water in the filter tank through the elements in a reverse direction dislodging the filter aid and accumulated dirt and carrying them to waste.

(F) "Airgap" means the unobstructed vertical distance through the free atmosphere between the lowest opening from any pipe or faucet conveying water or waste to a tank, plumbing fixture receptor, or other device and the flood level rim of the receptacle.

(G) "Approved" means, as to materials, equipment, design, and types of construction, acceptance by the code official by one (1) of the following methods:

(i) Investigation or tests conducted by recognized authorities.

(ii) Investigation or tests conducted by technical or scientific organizations.

(iii) Accepted principles.

The investigation, tests, or principles shall establish that the materials, equipment, and types of construction are safe for the intended purpose.

(H) "Approved agency" means an established and recognized agency regularly engaged in conducting tests or furnishing inspection services, when such agency has been approved by the state building commissioner or is listed in 675 IAC 12-6-1.

(3) S4202.3 Definitions "B"

(A) "Backwash" means the process of thoroughly cleaning the filter medium or elements, or both, by the reverse flow of water.

(B) "Backwash cycle" means the time required to backwash the filter system thoroughly.

(C) "Backwash pipe" means a type of "filter waste discharge piping" as defined in subdivision (7)(N).

(D) "Backwash rate" means the rate of application of water through a filter during the backwash cycle expressed in gallons per minute per square foot of effective filter area.

(E) "Basin" means any vessel constructed of man-made materials and designed to hold water to be used as a swimming pool, spa, or hot tub.

(F) "Bather" means a person using the pool and adjoining deck areas for the purpose of water sports or related activities.

(G) "Body feed" means the continuous addition of controlled amounts of filter aid during the operation of a diatomite type filter to maintain a permeable filter cake. If added as a slurry, this may be referred to as a slurry feed.

(H) "Booster pump system" means a device used to provide hydraulic support for certain types of equipment such as the following:

(i) Pool cleaning systems.

(ii) Chlorinators.
(iii) Solar systems.
(iv) Therapy jets.
(v) Water features.

(I) "Breakpoint chlorination" means the addition of a sufficient amount of chlorine to water to destroy the combined chlorine present.

(4) S4202.4 Definitions "C"

(A) "Cartridge" means a filter component of either the depth or surface type having fixed dimensions and designed to remove suspended particles from water flowing through the unit.

(B) "Cartridge, depth type" means a filter cartridge with a medium relying on penetration of particulates into the medium for removal and providing adequate holding capacity of such particulates.

(C) "Cartridge, surface type" means a filter cartridge with a medium relying on retention of particles on the surface of the cartridge for removal.

(D) "Chemical feeder" means any device used to feed chemicals such as sanitizers, pH adjusters, algicide, etc. into a pool or spa.

(E) "Chemical feeder output rate" means the weight or volume of active ingredients delivered by a chemical feeder expressed in units of weight of volume and time.

(F) "Chemical feed rate indicator" means a mechanism that will produce reproducible results expressed in units of weight or volume of chemical per unit of time or per unit of volume of water. The mechanism may:

(i) be a direct reading instrument; or
(ii) require the use of a reference chart.

(G) "Chemical piping" means piping that conveys concentrated chemical solutions from a feeding apparatus to the circulation piping.

(H) "Circulation system" means an arrangement of mechanical equipment or components, or both, designed to ensure even distribution of heat, chemicals, and filtrated water throughout the pool or spa. The term includes filters, pumps, strainers, disinfectant, or other chemical feed devices, piping, inlets, drains, overflow fittings, and other appurtenances.

(I) "Code official" means the local building official as authorized under IC 36-7-2-9 and local ordinance.

(J) "Corrosion-resistant" means capable of maintaining original surface characteristics under the prolonged influence of the use environment.

(K) "Cove" means the radius between the wall and the floor.

(5) S4202.5 Definitions "D"

(A) "Decks" means those areas surrounding a pool that are specifically constructed or installed for use by bathers.

(B) "Deep areas" means the portions of a pool having water depths in excess of five (5) feet.

(C) "Design head" means the total head requirement of the circulation system at the design rate of flow.

(D) "Design rate of flow (design filter rate)" means the rate of flow in a system that is used for design calculation. (The volume of the pool, spa, or hot tub in gallons divided by the number of minutes in the turnover time.)

(E) "Diatomite filter" means one designed to filter water through a thin layer of filter aid such as diatomaceous earth or volcanic ash. Diatomite filters may be of the pressure or vacuum type.

(F) "Distribution system, lower" means those devices used in the bottom of a sand type filter to:

(i) collect the water uniformly during the filtering; and
(ii) distribute the backwash water uniformly during the backwashing.

(G) "Distribution system, upper" means those devices designed to distribute the water entering a sand type filter in a manner such as to prevent movement or migration of the filter media. This system shall also properly collect water during filter backwashing unless other means are provided.

(H) "Diving board" means a recreational mechanism for entering a swimming pool, consisting of a semirigid board that derives its elasticity through the use of a fulcrum mounted below the board.

(I) "Diving equipment, manufactured" means manufactured diving equipment and shall include diving boards, jump boards, and spring boards. Architectural features such as decorative rocks and elevated bond beams are not considered to be manufactured diving equipment.

(6) S4202.6 Definitions "E"

"Effective filtration area" means the total surface area through which the design flow rate will be maintained during filtration.

(7) S4202.7 Definitions "F"

(A) "Face piping" means the piping, with all valves and fittings, that is used to connect the filter system together as a unit.

(B) "Filter" means a device that separates solid particles from water by circulating the water through a porous substance(a filter medium element).

(C) "Filter aid" means a type of finely divided media used to coat a septum type filter, usually diatomaceous earth or volcanic ash. (Note: Alum, as used on the bed of a sand filter, is also referred to as a filter aid.)

(D) "Filter, cartridge" means a filter that uses a porous cartridge as its filter medium.

(E) "Filter cycle" means the operating time between cleaning or backwash cycles.

(F) "Filter, diatomaceous earth" means a filter that uses a thin layer of diatomaceous earth as its filter medium that periodically must be replaced.

(G) "Filter element" means that part of a filter that supports the surface upon which the filter aid is deposited (usually in diatomite filters).

(H) "Filter media" means the finely graded material that entraps suspended particles (sand, anthracite, etc.).

(I) "Filter, permanent medium" means a filter that under normal use will not have to be replaced.

(J) "Filter rate" means the rate of application of water to a filter expressed in gallons per minute per square foot of effective filter area.

(K) "Filter rock" means graded, rounded rock or gravel, or both, not subject to degradation by common pool chemical used to support filter media.

(L) "Filter sand" means a specially graded type of permanent filter media.

(M) "Filter septum" means that part of the filter element in a diatomite type filter upon which a cake of diatomite or other nonpermanent filter aid may be deposited.

(N) "Filter waste discharge piping" means piping that conducts wastewater from a filter to a drainage system. Connection to drainage system is made through an airgap or other approved method.

(O) "Floor" means the interior bottom pool surface and consists of that surface from a horizontal plane up to a maximum of a forty-five (45) degree slope.

(P) "Flow balance valve" means a device to regulate the effluent from the skimmer housing of each of a combination of two (2) or more surface skimmers.

(Q) "Freeboard" means the clear vertical distance in a sand type filter between the top of the filter media and the lowest outlet of the upper distribution system.

(R) "Fresh water" means water having a specific conductivity less than a solution containing six thousand (6,000) parts per million of sodium chloride.

(S) "Friction loss" means the pressure drop expressed in feet of water or psi caused by liquid flowing through the piping and fittings.

(8) S4202.8 Definitions "H"

(A) "Head loss" means the total pressure drop in pounds per square inch (kilo Pascals) or feet (meters) or head between the inlet and the outlet of a component.

(B) "High rate sand filter" means a sand filter designed for flows in excess of five (5) gallons per minute per square foot.

(C) "Hydrojet booster pump system" means a system whereby one (1) or more hydrojets are activated by the use of a pump that is completely independent of the filtration and heating system of a spa.

(D) "Hydrojets" means a fitting that blends air and water creating a high velocity, turbulent stream of air enriched water.

(9) S4202.9 Definitions "I"

(A) "Indirect waste pipe" means a pipe that does not connect directly with the drainage system but conveys liquid wastes by discharging into a plumbing fixture, interceptor, or receptacle that is directly connected to the drainage

system.

(B) "Inlet fitting" means a fitting or fixture through which circulated or hydrojetted water enters a pool, spa, or hot tub.

(C) "Interactive play attraction" means a water attraction, including, but not limited to, splash pads, spray pads, and manufactured devices using sprayed, jetted, or other water sources contacting the users, not incorporating standing or captured water as part of the user activity area, and not utilizing a pool or spa circulation system.

(10) S4202.10 Definitions "J"

"Jump board" means a recreational mechanism that has a coil spring, leaf spring, or comparable device located beneath the board that is activated by the force exerted in jumping on the board.

(11) S4202.11 Definitions "L"

(A) "Ladders" means the following:

(i) "Deck ladder" means a ladder for deck access from outside the pool.

(ii) "In-pool ladder" means a ladder located in a pool to provide ingress and egress from the deck.

(iii) "Limited access ladder" means a ladder with provision for making entry inaccessible when a pool is not in use, that is, swing-up, slide-up, or equivalent.

(B) "Liner" means the membrane that acts as a container for the water, usually categorized as one (1) of the following:

(i) "Expandable liner" means a liner that is constructed of a material that has the capability of stretching into a greater depth of irregular shape other than the original constructed dimensions.

(ii) "Hopper liner" means a liner that is used to obtain greater depth by geometrical pattern construction on the liner bottom or floor to fit a predetermined size and shape.

(C) "Listed" means equipment or materials included in a list published by an organization engaged in product evaluation, that maintains periodic inspection of production of listed equipment or materials, and whose listing states either that the equipment or material meets appropriate standards or has been tested and found suitable for use in a specified manner.

(D) "Lower distribution system" (underdrain) means those devices used in the bottom of a permanent medium filter to collect the water during the filtering and to distribute the water during the backwashing.

(12) S4202.12 Definitions "M"

(A) "Main outlet" means the outlet fitting or fittings at or near the deepest portion of a swimming pool, spa, or hot tub through which water passes to the recirculating system. This outlet is often referred to as the "main drain".

(B) "Make-up water" means fresh water used to fill or refill the pool.

(C) "Multiport valve" means a valve for various filter operations, which combines in one (1) unit the function of two (2) or more single direct flow valves.

(13) S4202.13 Definitions "N"

(A) "Net positive suction head (NPSH)" means the head available at the entrance or eye of an impeller to move and accelerate the water entering the eye. This head is the gauge pressure at the suction flange of the pump plus the velocity head.

(B) "Nonswimming area" means any portion of a pool where water depth, offset ledges, or similar irregularities would prevent normal swimming activities.

(C) "NPSH, available" means a function of the system in which the pump operates. The available NPSH at the desired rate of flow.

(D) "NPSH, required" means a function of the pump design that varies among different makes, and a valve that must be supplied by the pump manufacturer.

(14) S4202.14 Definitions "P"

(A) "Perimeter overflow system" means a continuous channel formed into the sidewall entirely around the perimeter of the pool, unless interrupted by steps, into which surface pool water is continuously drawn during normal operation to provide a skimming action.

(B) "Pinching hazard" means any configuration of components that would pinch or entrap the fingers or toes of a bather.

(C) "Pool" includes the following:

(i) "Combination pool" means a pool used for swimming and diving.

(ii) "Vanishing edge pool" means a pool where the top of one (1) or more of the basin wall or walls is submerged with no adjacent deck or decks.

(iii) "Wading pool" means a shallow pool having a maximum depth of twenty-four (24) inches and intended for children's play.

(iv) "Whirlpool". See "Spa".

(v) "Zero-depth entry pool" means a water attraction having a sloped entrance to where the water depth is zero (0) inches at the shallowest point.

(D) "Pool depth" means the distance between the floor of pool and the waterline.

(E) "Pool plumbing" means all chemical, circulation, filter waste discharge piping, deck drainage, and water filling systems.

(F) "Positive displacement" means the mechanical displacement of a volume of fluid.

(G) "Precipitate" means a solid material that:

(i) is forced out of a solution by some chemical reaction; and

(ii) may settle out or remain as a haze in suspension (turbidity).

(H) "Precoat" means the initial coating of filter aid on the septum of a diatomaceous earth filter.

(I) "Pump discharge pressure" means the actual gauge reading measured in pounds per square inch taken at the discharge outlet of a pump.

(J) "Puncture hazard" means any surface or protrusion that would puncture a bather's skin under casual contact.

(15) S4202.15 Definitions "R"

(A) "Rapid sand filter" means a filter designed to be used with sand as the filter media.

(B) "Rated pressure" means that pressure that is equal to or less than the designed pressure and appears on the data plate of the equipment.

(C) "Receptor" means an approved plumbing fixture or device of such material, shape, and capacity as to adequately receive the discharge from indirect waste piping, so constructed and located as to be readily cleaned.

(D) "Recessed treads" means a series of vertically spaced cavities in the pool wall creating tread areas for steps.

(E) "Removable" means capable of being disassembled with the use of only a simple tool such as a screwdriver, pliers, or a wrench.

(F) "Return piping" means that part of the piping between the filter and the pool or spa through which passes the filtered water. (This piping frequently is referred to as "effluent piping".)

(G) "Rope and float line" (transition rope) means a continuous line not less than one-fourth (1/4) inch in diameter that is supported by buoys and attached to opposite sides of a pool to separate the deep and shallow ends.

(16) S4202.16 Definitions "S"

(A) "Saline water" means water having a specific conductivity in excess of a solution containing six thousand (6,000) parts per million of sodium chloride.

(B) "Separation tank" means a device used to clarify filter rinse or wastewater. It is sometimes called a "reclamation tank".

(C) "Septum" means that part of the filter element consisting of cloth, wire screen, or other porous material on which the filter cake is deposited.

(D) "Shallow areas" means those portions of a pool ranging in water depth from two (2) to five (5) feet.

(E) "Skim filter" means a surface skimmer combined with a vacuum filter.

(F) "Spa" means any spa that incorporates hot water jets, cold water jets, aeration systems, or any combination of the same for hydromassage.

(G) "Spa, permanent" means a spa in which the water-heating and water-circulating equipment is not an integral part of the product. Permanent spas may employ:

(i) separate components such as an individual filter, pump, heater, and controls; or

(ii) assembled combinations of various components.

(H) "Spa, portable, residential" means a spa in which all control, water-heating, and water-circulating equipment is an integral part of the product. Portable residential spas may be permanently wired or cord-connected. The spa shall

be movable and aboveground.

(I) "Spray rinse, manual" means a spray system intended to be used manually for the washing of filter aid or accumulated dirt, or both, from a filter surface either in place or after removal from the filter tank. This is usually accomplished by means of a hose and nozzle.

(J) "Static suction lift" means the vertical distance in feet from the center line of the pump impeller to the level of water in the pool.

(K) "Steps" means a tread or series of treads extending down from the deck and terminating at the pool bottom.

(L) "Steps, recessed" means a step or series of steps that are recessed so that all risers are located outside the pool wall.

(M) "Steps, recessed steps, ladders, and recessed treads" means methods of pool ingress and egress that may be used alone or in conjunction with one another.

(N) "Strainer" means a device used to remove hair, lint, leaves, or other coarse material on the suction side of a pump.

(O) "Suction piping" means that portion of the circulation piping located between the pool structure and the inlet side of the pump and usually includes the following:

(i) Main outlet piping.

(ii) Skimmer piping.

(iii) Vacuum piping.

(iv) Surge tank piping.

(P) "Surface skimmer" means a device designed to continuously remove surface film and water and return it through the filter as part of the recirculation system, usually incorporating a self-adjusting weir, a collection tank, and a means to prevent air lock of the pump. It is sometimes referred to as a "recirculating overflow", a "mechanical", or an "automatic skimmer".

(Q) "Swimming pool" means any artificial basin of water constructed, modified, or improved for wading, swimming, or diving. The term does not include artificial lakes. The term includes the following:

(i) "Swimming pool, in-ground" means any pool whose sides rest in partial or full contact with the earth.

(ii) "Swimming pool, on-ground" means any pool whose sides rest fully above the surrounding earth.

(iii) "Swimming pool, residential" means any in-ground pool or on-ground pool capable of a water depth greater than forty-two (42) inches (one thousand sixty-seven (1,067) mm), and all pools installed inside a residence, regardless of water depth, whether or not served by electrical circuits of any nature, and which is intended for noncommercial use as a swimming pool by not more than two (2) owner families and their guests.

(17) S4202.17 Definitions "T"

(A) "Total discharge head" means the value in feet of water that a pump will raise water above its center line.

(B) "Total dynamic head" or "TDH" means the arithmetical difference between the total discharge head and total suction head (a vacuum reading is considered as a negative pressure). This value is used to develop the published performance curve.

(C) "Total dynamic suction lift" or "TDSL" means the arithmetical total of static suction lift, friction head loss, and velocity head loss working on the suction side of the pump.

(D) "Total suction head" means the value in feet of water that a pump will lift by suction.

(E) "Toxic" means having an adverse physiological effect on man.

(F) "Trap" means a fitting or device so designed and constructed as to provide, when properly vented, a liquid seal that will prevent the back passage of air without materially affecting the flow of sewage or wastewater through it.

(G) "Trimmer valve" means a flow adjusting device that is used to proportion flow over the skimming weir and flow through the main suction line from the main outlet or the vacuum cleaning line.

(H) "Turnover time" means the period of time required to circulate a volume of water equal to the pool capacity.

(18) S4202.18 Definitions "U"

(A) "Underwater light" means a fixture designed to illuminate a pool from beneath the water surface, further defined as:

(i) "dry niche light" means a light unit placed behind a watertight window in the pool wall; or

(ii) "wet niche light" means a watertight and water-cooled light unit placed in a submerged, wet niche in the pool wall and accessible only from the pool.

(B) "Upper distribution system" means those devices designed to distribute the water entering a permanent medium filter in a manner so as to prevent movement or migration of the filter medium. This system shall also properly collect water during filter backwashing unless other means are provided.

(19) S4202.19 Definitions "V"

(A) "Vacuum piping" means the piping from the suction side of a pump connected to a vacuum fitting located at the pool and below the water level to which underwater cleaning equipment may be attached.

(B) "Velocity" means a measurement of the motion of liquids usually expressed in feet per second.

(C) "Vertical" means a truly plumb line of surface running perpendicular to the plane of the horizon.

(20) S4202.20 Definitions "W"

(A) "Wading area" means the portions of a pool having water depths of two (2) feet and less.

(B) "Walls" means interior pool wall surfaces consisting of surfaces from the vertical to a forty-five (45) degree slope.

(C) "Waste piping" means piping that conveys wastewater.

(D) "Waterline" means one (1) of the following:

(i) The waterline for the skimmer system shall fall in the midpoint of the operating range of the skimmers.

(ii) The waterline for the overflow system shall be established by the height of the overflow rim or the mid-level of surge weirs, if present.

(E) "Width or length" means the actual water dimension taken from wall to wall at the waterline.

(F) "Winterizing" means the procedure for preparing pools from freezing weather. The term includes chemical treatment of the standing water, plus physical and chemical protection of the pool and its equipment against freezing.

(G) "Working pressure" means the maximum operating water pressure recommended by the manufacturer.

(Fire Prevention and Building Safety Commission; 675 IAC 14-4.3-271; filed Mar 25, 2011, 10:19 a.m.: 20110420-IR-675090789FRA; readopted filed Aug 4, 2011, 8:35 a.m.: 20110831-IR-675110254RFA)

675 IAC 14-4.3-272 Structural design

Authority: IC 22-13-2-2
Affected: IC 22-12-1-5; IC 22-13-2-7; IC 22-13-2-11; IC 22-15; IC 36-7

Sec. 272. S4203 Structural design is added as follows:

(1) S4203.1 Prior to construction, rehabilitation, or alteration of a permanently installed residential pool, plans and specifications shall be submitted to the local authority when required by local ordinance for review, approval, and issuance of a permit to construct or rehabilitate.

(2) S4203.2 The structural design and materials used shall be in accordance with generally accepted structural engineering practices. Sand or earth shall not be permitted as an interior finish in a swimming pool.

(3) S4203.3 In all outdoor pools, the pool shell and appurtenances, piping, filter system, pump, motor, and other components shall be so designed and constructed to facilitate protection from damage due to freezing.

(4) S4203.4 The surfaces within the pool intended to provide footing for bathers shall be designed and constructed to provide a slip-resisting surface. The roughness or irregularity of such surfaces shall not provide an abrasion hazard to the feet during normal use.

(5) S4203.5 The colors, patterns, or finishes of the pool interior shall not obscure the existence or presence of objects or surfaces within the pool.

(Fire Prevention and Building Safety Commission; 675 IAC 14-4.3-272; filed Mar 25, 2011, 10:19 a.m.: 20110420-IR-675090789FRA; readopted filed Aug 4, 2011, 8:35 a.m.: 20110831-IR-675110254RFA)

675 IAC 14-4.3-273 Materials of construction

Authority: IC 22-13-2-2
Affected: IC 22-12-1-5; IC 22-13-2-7; IC 22-13-2-11; IC 22-15; IC 36-7

Sec. 273. Section S4204 Materials of construction is added as follows: S4204.1 Swimming pools and all appurtenances thereto shall be constructed of materials that:

(1) are nontoxic to humans and the environment;
(2) are impervious and reasonably enduring;
(3) can withstand the stresses that the pool was designed to receive;
(4) will provide a watertight structure with a smooth and easily cleaned surface without cracks or joints, excluding structural joints; or
(5) a smooth, easily cleaned surface finish shall be applied to, attached to, or installed.
(Fire Prevention and Building Safety Commission; 675 IAC 14-4.3-273; filed Mar 25, 2011, 10:19 a.m.: 20110420-IR-675090789FRA; readopted filed Aug 4, 2011, 8:35 a.m.: 20110831-IR-675110254RFA)

675 IAC 14-4.3-274 Dimensional design
Authority: IC 22-13-2-2
Affected: IC 22-12-1-5; IC 22-13-2-7; IC 22-13-2-11; IC 22-15; IC 36-7

Sec. 274. Section S4205 Design is added as follows:
(1) S4205.2.1 No limits are specified for the shape of swimming pools except that consideration shall be given to the shape from the standpoint of safety and circulation of the swimming pool water.
(2) S4205.2.2 There shall be no protrusions, extensions, means of entanglement, or other obstructions in the swimming area that can cause the entrapment or injury of the bather.
(3) S4205.2.3 There shall be construction tolerances allowed on all dimensional designs. Overall length, width, and depth in the deep end may vary plus or minus three (3) inches. All other overall dimensions may vary plus or minus two (2) inches unless otherwise specified.
(Fire Prevention and Building Safety Commission; 675 IAC 14-4.3-274; filed Mar 25, 2011, 10:19 a.m.: 20110420-IR-675090789FRA; readopted filed Aug 4, 2011, 8:35 a.m.: 20110831-IR-675110254RFA)

675 IAC 14-4.3-275 Walls
Authority: IC 22-13-2-2
Affected: IC 22-12-1-5; IC 22-13-2-7; IC 22-13-2-11; IC 22-15; IC 36-7

Sec. 275. Section S4206 Walls is added as follows: S4206.1 Walls shall not be greater than eleven (11) degrees from plumb for a minimum depth of two (2) feet nine (9) inches from the waterline in deep areas or two (2) feet three (3) inches in the shallow areas. Below these depths the wall may be curved to join the floor. An exception to this section is walls on Type 1 and special purpose pools shall be plumb as is shown in section 10(d) of this rule, Figure No. 4-5. *(Fire Prevention and Building Safety Commission; 675 IAC 14-4.3-275; filed Mar 25, 2011, 10:19 a.m.: 20110420-IR-675090789FRA; readopted filed Aug 4, 2011, 8:35 a.m.: 20110831-IR-675110254RFA)*

675 IAC 14-4.3-276 Floor slope
Authority: IC 22-13-2-2
Affected: IC 22-12-1-5; IC 22-13-2-7; IC 22-13-2-11; IC 22-15; IC 36-7

Sec. 276. Section S4207 Floor slope is added as follows: S4207.1 Floor slopes shall be in compliance with the following:
(1) All slopes shall be uniform.
(2) The slope of the floor from the shallow end wall towards the deep end shall not exceed one (1) foot in seven (7) feet (1:7) to the point of the first slope change.
(3) The point of the first slope change shall be:
(A) defined as the point at which the floor slope exceeds one (1) foot in seven (7) feet (1:7); and
(B) not less than six (6) feet from the shallow end wall.
(4) The slope of the floor from the point of the first slope change to the deep end wall shall not exceed one (1) foot in three (3) feet (1:3).
(Fire Prevention and Building Safety Commission; 675 IAC 14-4.3-276; filed Mar 25, 2011, 10:19 a.m.: 20110420-IR-

675090789FRA; readopted filed Aug 4, 2011, 8:35 a.m.: 20110831-IR-675110254RFA)

675 IAC 14-4.3-277 Water depth

Authority: IC 22-13-2-2
Affected: IC 22-12-1-5; IC 22-13-2-7; IC 22-13-2-11; IC 22-15; IC 36-7

Sec. 277. Section S4208 Water depth is added as follows:

(1) S4208.1 Water depths at the shallow end of the swimming area shall be two (2) feet nine (9) inches minimum and three (3) feet six (6) inches maximum, except for special purpose pools.

(2) S4208.2 No minimum water depth shall be specified in a nonswimming area. The nonswimming area shall be visually set apart.

(3) S4208.3 Pools of the type where manufactured diving equipment is permitted shall have the area and depth of water in compliance with the drawings for Type I through Type V pools.

(4) S4208.4 Where manufactured diving equipment is installed, it shall:

(A) conform to the specifications set forth in section 15 of this rule; and

(B) be so located in the diving area of the pool so as to provide the minimum dimensions for area and depth of water as shown on drawings of Type I through Type V pools.

(5) S4208.5 The tip of the manufactured diving equipment shall be located at point "A", which is the reference point for all other dimensions.

(Fire Prevention and Building Safety Commission; 675 IAC 14-4.3-277; filed Mar 25, 2011, 10:19 a.m.: 20110420-IR-675090789FRA; readopted filed Aug 4, 2011, 8:35 a.m.: 20110831-IR-675110254RFA)

675 IAC 14-4.3-278 Minimum vertical clearances

Authority: IC 22-13-2-2
Affected: IC 22-12-1-5; IC 22-13-2-7; IC 22-13-2-11; IC 22-15; IC 36-7

Sec. 278. Section S4209 Minimum vertical clearances is added as follows: S4209.1 Minimum unobstructed headroom from the top of the manufactured diving equipment shall be provided for diving in accordance with the following table unless greater dimensions are called for by the manufacturer:

Pool Type	Minimum Headroom Above Board
I	12 feet
II	12 feet
III	12 feet
IV	13 feet
V	14 feet

(Fire Prevention and Building Safety Commission; 675 IAC 14-4.3-278; filed Mar 25, 2011, 10:19 a.m.: 20110420-IR-675090789FRA; readopted filed Aug 4, 2011, 8:35 a.m.: 20110831-IR-675110254RFA)

675 IAC 14-4.3-279 Pool types

Authority: IC 22-13-2-2
Affected: IC 22-12-1-5; IC 22-13-2-7; IC 22-13-2-11; IC 22-15; IC 36-7

Sec. 279. Section S4210 Pool types is added as follows:

(1) S4210.1 Residential pools shall be further classified into types as an indication of the suitability of a pool for use with diving equipment as shown in subdivision (2), Figure No. 4-1. Diving equipment classified at a higher type shall not be used on a pool of a lesser type.

(2) S4210.2 This subdivision contains Figure No. 4-1, a reference chart of minimum dimensions for residential pools with manufactured diving equipment.

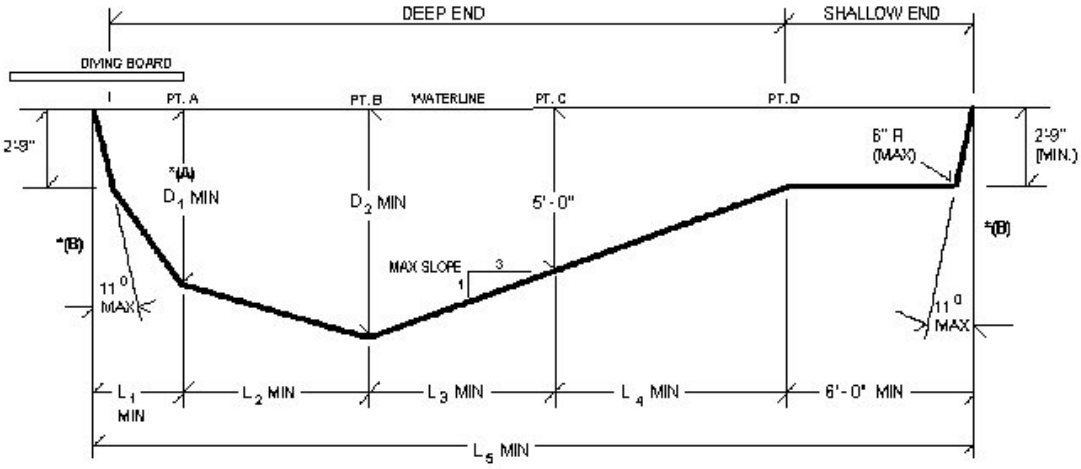

*(A) **Minimum depth under diving board or jump board.**

*(B) **Type 1 pools shall have plumb walls as shown in 4308.4 of this rule, Figure No. 4-5.**

Figure No. 4-1
Longitudnal Cross-section at Centerline

POOL TYPE	MINIMUM DIMENSIONS							MINIMUM WIDTH OF POOL		
	D_1	D_2	L_1	L_2	L_3	L_4	L_5	PT. A	PT. B	PT. C
0	*	*	*	*	*	*	*	*	*	*
I	6'-0"	7'-6"	1'-6"	7'-0"	7'-6"	6'-9"	28'-9"	10'-0"	12'-0"	10'-0"
II	6'-0"	7'-6"	1'-6"	7'-0"	7'-6"	6'-9"	28'-9"	12'-0"	15'-0"	12'-0"
III	6'-10"	8'-0"	2'-0"	7'-6"	9'-0"	6'-9"	31'-3"	12'-0"	15'-0"	12'-0"
IV	7'-8"	8'-6"	2'-6"	8'-0"	10'-6"	6'-9"	33'-9"	15'-0"	18'-0"	15'-0"
V	8'-6"	9'-0"	3'-0"	9'-0"	12'-0"	6'-9"	36'-9"	15'-0"	18'-0"	15'-0"

* Diving equipment is prohibited.

(3) S4210.3 The minimum allowable underwater cross sections at B, C, and D shall be as shown on drawings of Type I through Type V pools (section 4308.4 through 4308.5 of this rule, Figures No. 4-5 through 4-6).

(4) S4210.4 Constant depth and other swimming pools on which diving equipment is prohibited (Type O) with water depths not exceeding four (4) feet shall not be limited in width, length, or depth of water except as provided in sections 4 and 5 of this rule.

(5) S4210.5. Stationary diving platforms built on-site shall be located in the diving area of the pool so as to provide the minimum dimension as shown in Figure No. 4-1, at a maximum height of three (3) feet above the waterline. Point "A" shall be eighteen (18) inches in front of the wall at the platform center line. Stationary diving platforms shall not extend more than eighteen (18) inches horizontally over the water from the wall.

(6) S4210.6 This section contains Figure No. 4-2, a maximum allowable wall slope.

Figure 4-2
Maximum Allowable Wall Slope

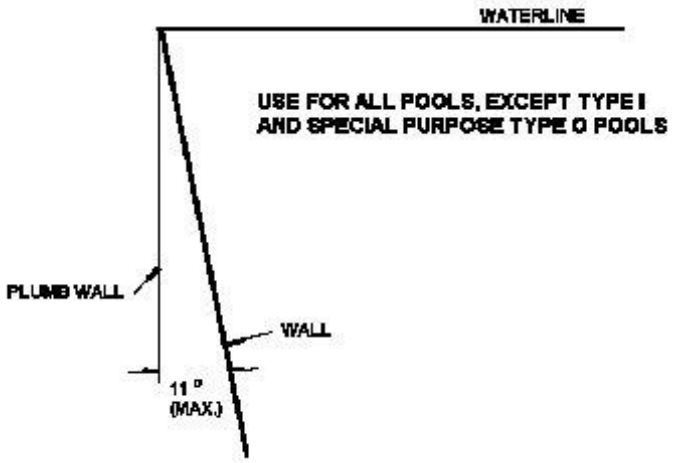

(7) S4210.7 This section contains Figure No. 4-3, relationship of minimum top view dimensions to steps or stairs.

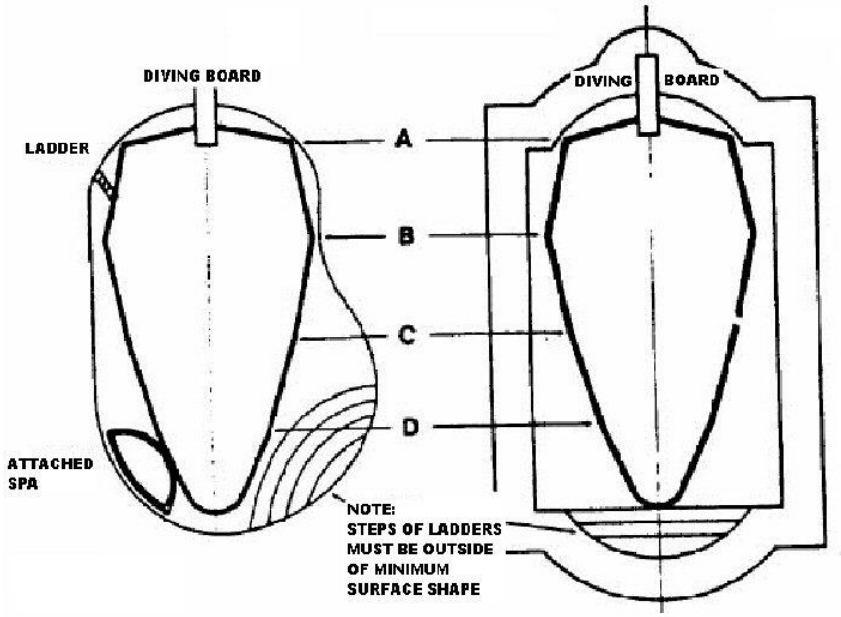

(8) S4210.8 This section contains Figure No. 4-4, relationship of vinyl, fiberglass, gunite, and concrete construction to minimum requirements.

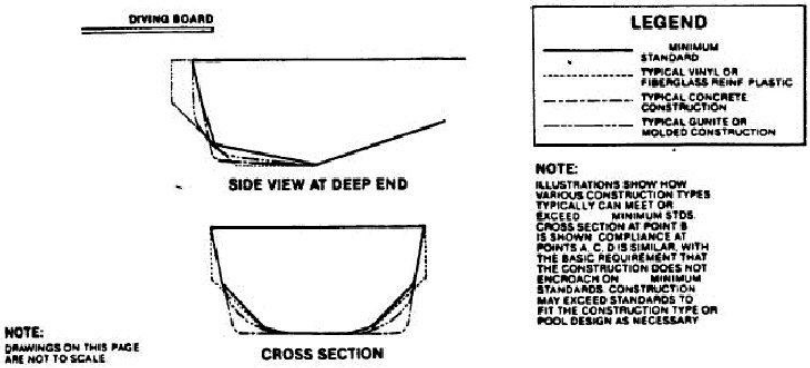

(9) S4210.9 This section contains Figure No. 4-5, minimum dimensions for a Type I pool.

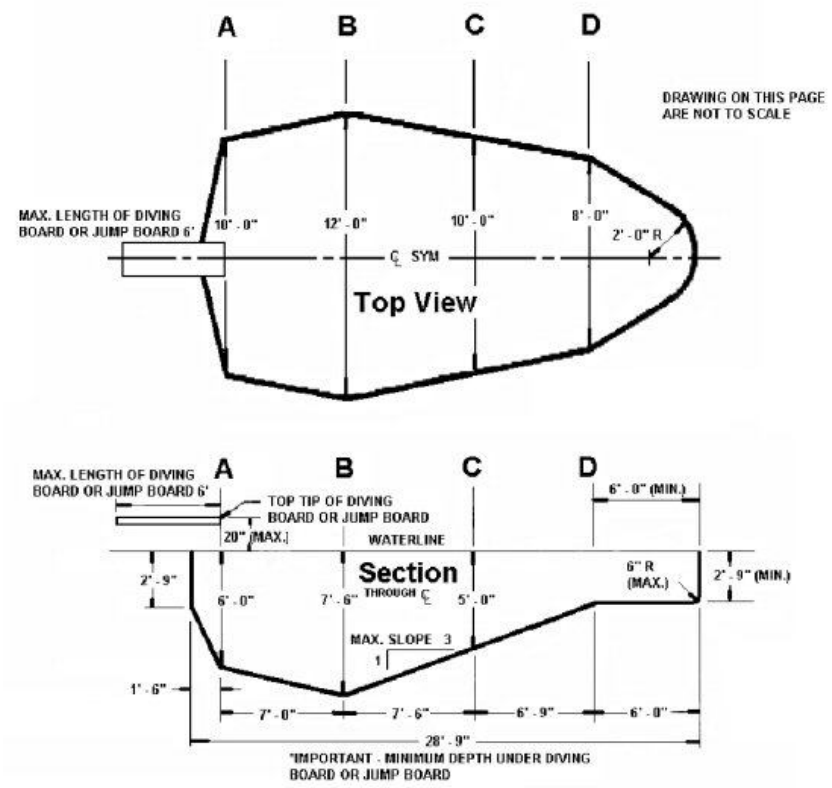

Figure 4-5
Minimal Dimensions - Type 1 Pool

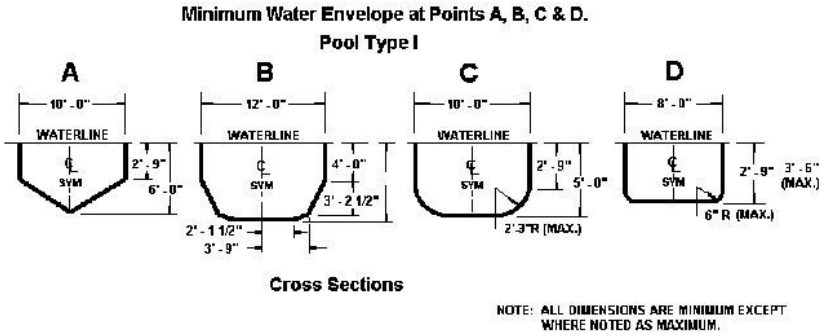

(10) S4210.10 This section contains Figure No. 4-6, minimum dimensions for a Type II pool.

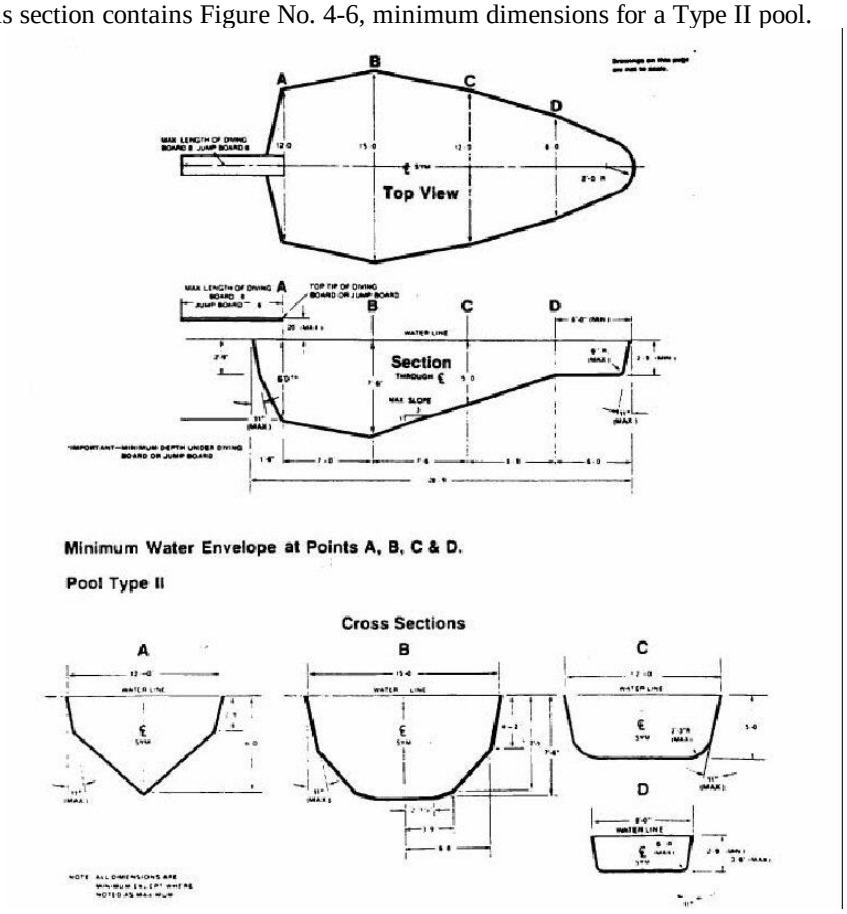

(11) S4210.11 This section contains Figure No. 4-7, minimum dimensions for a Type III pool.

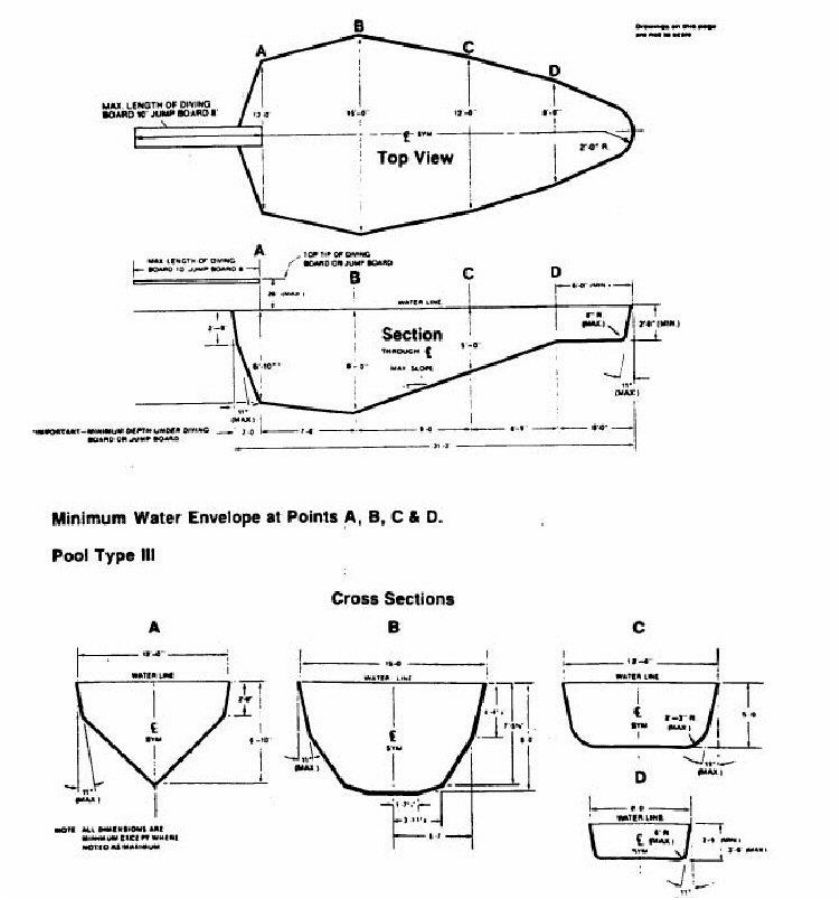

(12) S4210.12 This section contains Figure No. 4-8, minimum dimensions for a Type IV pool.

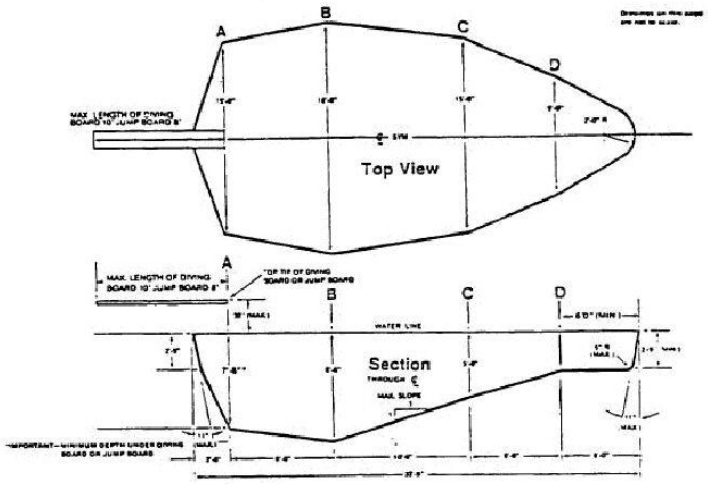

Minimum Water Envelope at Points A, B, C & D.

Pool Type IV

Cross Sections

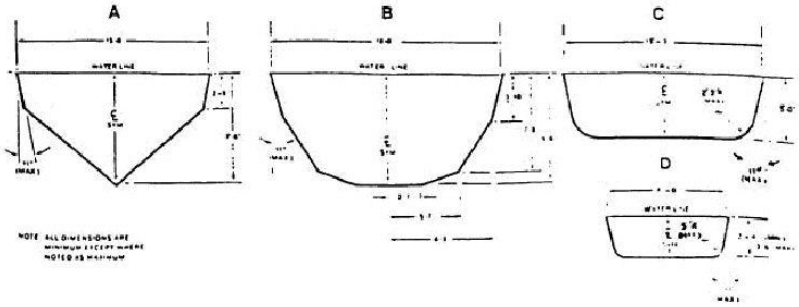

(13) S4210.13 This section contains Figure No. 4-9, minimum dimensions for a Type V pool.

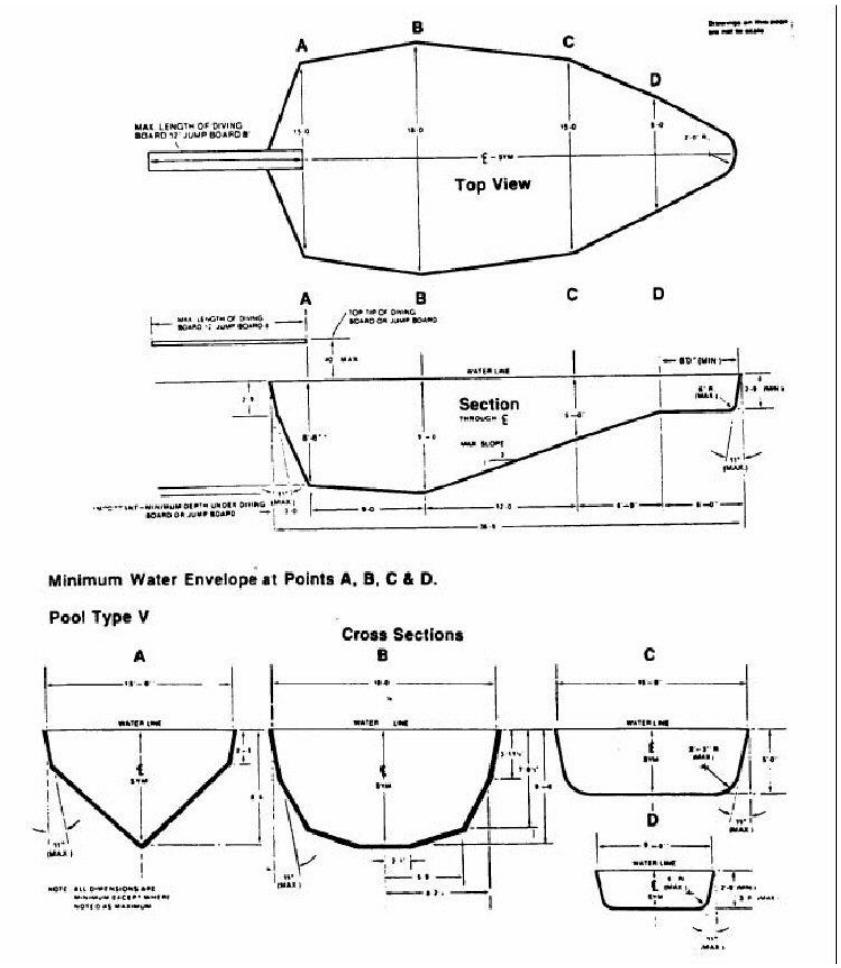

(14) S4210.14 This section contains Figure No. 4-10, shallow end detail for pool Types II through V.

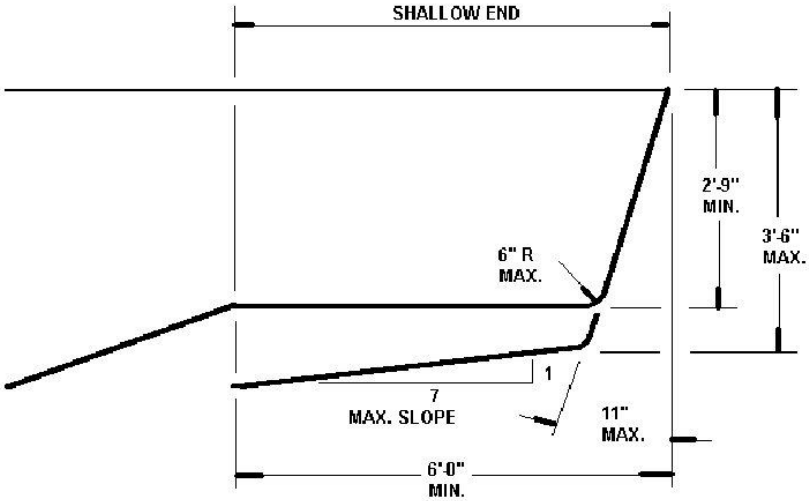

Figure 4-10
Shallow End Detail

(Fire Prevention and Building Safety Commission; 675 IAC 14-4.3-279; filed Mar 25, 2011, 10:19 a.m.: 20110420-IR-675090789FRA; readopted filed Aug 4, 2011, 8:35 a.m.: 20110831-IR-675110254RFA)

675 IAC 14-4.3-280 Offset ledges and underwater seat benches

Authority: IC 22-13-2-2
Affected: IC 22-12-1-5; IC 22-13-2-7; IC 22-13-2-11; IC 22-15; IC 36-7

Sec. 280. Section S4211 Offset ledges and underwater seat benches is added as follows:
(1) S4211.1 Offset ledges, when provided, shall fall within eleven (11) degrees from plumb starting at the junction of the pool wall and waterline and shall have a slip-resisting surface. Maximum width shall be eight (8) inches. The typical allowable dimensions are based on the depths shown as follows:

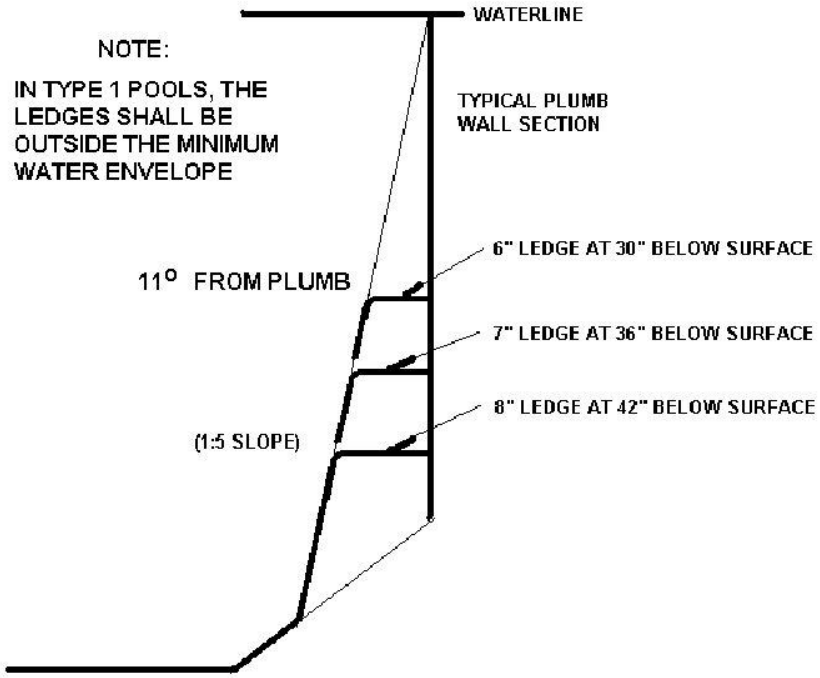

(2) S4211.2 Underwater seat benches, where provided, shall:

(A) have a maximum horizontal seat bench depth of twenty (20) inches below the waterline;

(B) be visually set apart;

(C) have a slip-resisting surface; and

(D) be located fully outside of the required minimum diving water envelope if the pool is designed for use with manufactured diving equipment.

Underwater seat benches shall be permitted in the deep end of the pool only if they are either completely recessed, shaped to be compatible with the slope of the pool wall, or in a corner of the pool.

(Fire Prevention and Building Safety Commission; 675 IAC 14-4.3-280; filed Mar 25, 2011, 10:19 a.m.: 20110420-IR-675090789FRA; readopted filed Aug 4, 2011, 8:35 a.m.: 20110831-IR-675110254RFA)

675 IAC 14-4.3-281 Decks and deck equipment

Authority: IC 22-13-2-2

Affected: IC 22-12-1-5; IC 22-13-2-7; IC 22-13-2-11; IC 22-15; IC 36-7

Sec. 281. Section S4212 Decks and deck equipment is added as follows:

(1) S4212.1 Deck work shall be designed and installed so as to include the quality of subbase, concrete mix design, reinforcing, joints, and finishes. Work performed in accordance with the recommended practices of the American Concrete Institute (ACI) Standard 302.1R-80, "Guide for Concrete Floor and Slab Construction", may be deemed acceptable.

(2) S4212.2 Decks, ramps, coping, and similar step surfaces shall be slip-resisting and easily cleanable.

(3) S4212.3 Special features in or on decks such as markers, brand insignias, or similar features shall conform to this section.

(4) S4212.4 Steps outside the pool perimeter shall be in accordance with 675 IAC 14, the Indiana One and Two Family Dwelling Code.

(5) S4212.5 Excavation areas shall be adequately compacted when they support the deck or decks.

(6) S4212.6 Decks shall be sloped to effectively drain either to perimeter areas or to deck drains. Drainage shall remove pool splash water, deck cleaning water, and rainwater without leaving standing water.

(7) S4212.7 The minimum slope of decks shall be:

(A) one-eighth (1/8) inch per one (1) foot (1/8:12) for textured, hand-finished concrete decks;

(B) one-fourth (1/4) inch per one (1) foot (1/4:12) for exposed aggregate concrete decks; and
(C) one-half (1/2) inch per one (1) foot (1/2:12) for indoor/outdoor carpeting decks.
(8) S4212.8 The maximum slope for all decks other than wood decks shall be one (1) inch per foot except for ramps. The maximum slope for wood decks shall be one-eighth (1/8) inch per foot except for ramps. Expansion gaps shall be based on good engineering practices with respect to the type of wood used.
(9) S4212.9 The maximum voids between adjoining concrete slabs and/or between concrete slabs and expansion joint material shall be three-sixteenths (3/16) inch of horizontal clearance with a maximum difference in vertical elevation of one-fourth (1/4) inch.
(10) S4212.10 Construction joints where pool coping meets concrete decks shall be watertight and shall not allow water to pass to the ground beneath.
(11) S4212.11 The areas where the decks join pool coping shall be designed and installed so as to protect the coping and its mortar bed from damage as a result of reasonable movement of adjoining decks.
(12) S4212.12 Joints in decks shall be provided to minimize the potential for cracks due to a change in elevations, separation of surfaces, or movement of the slab.
(13) S4212.13 The areas where decks join concrete work shall be protected by expansion joints to protect the pool adequately from the pressures of relative movements.
(14) S4212.14 Decks shall be edged, have a radius, or be otherwise relieved to eliminate sharp corners.
(15) S4212.15 Site drainage shall be provided so as to direct all perimeter deck drainage as well as general site and roof drainage away from the pool.
(16) S4212.16 If used, an open pit or leaching design for backwash sump purposes shall be located so that it falls completely below adjacent decks and fully outside a line projected forty-five (45) degrees downward and away from such decks as shown below.

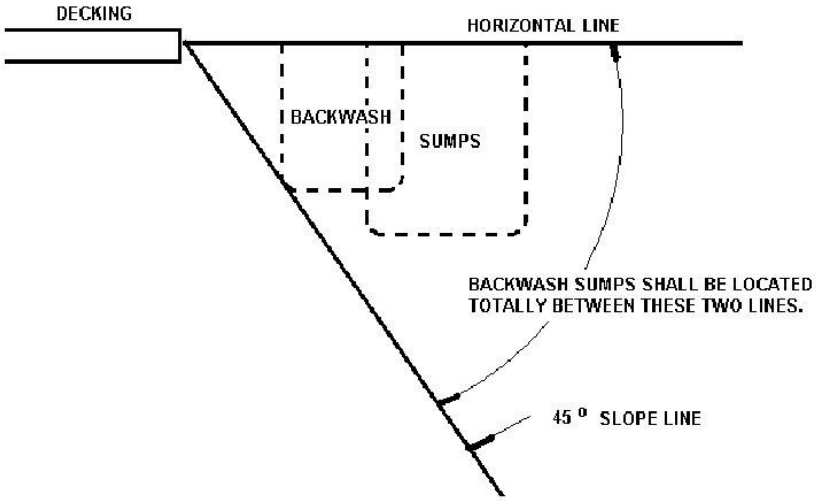

BACKWASH SUMP

(Fire Prevention and Building Safety Commission; 675 IAC 14-4.3-281; filed Mar 25, 2011, 10:19 a.m.: 20110420-IR-675090789FRA; readopted filed Aug 4, 2011, 8:35 a.m.: 20110831-IR-675110254RFA)

675 IAC 14-4.3-282 Circulation piping

Authority: IC 22-13-2-2
Affected: IC 22-12-1-5; IC 22-13-2-7; IC 22-13-2-11; IC 22-15; IC 36-7

Sec. 282. Section S4213 Circulation piping is added as follows:
(1) S4213.1 Circulation system piping, other than that integrally included in the manufacture of the pool, shall be subject

to an induced static hydraulic pressure test (sealed system) at twenty-five (25) pounds per square inch for thirty (30) minutes. This test shall be performed before the deck is poured, and the pressure shall be maintained through the deck pour.

(2) S4213.2 Valves installed in or under any decks shall provide a minimum ten (10) inches diameter access cover and valve pit to facilitate servicing.

(3) S4213.3 A hose bibb with a vacuum breaker shall be provided for washing down the entire deck area.

(Fire Prevention and Building Safety Commission; 675 IAC 14-4.3-282; filed Mar 25, 2011, 10:19 a.m.: 20110420-IR-675090789FRA; readopted filed Aug 4, 2011, 8:35 a.m.: 20110831-IR-675110254RFA)

675 IAC 14-4.3-283 Pool egress

Authority: IC 22-13-2-2
Affected: IC 22-12-1-5; IC 22-13-2-7; IC 22-13-2-11; IC 22-15; IC 36-7

Sec. 283. Section S4214 Pool egress is added as follows:

(1) S4214.1 All pools shall have a means of entry/exit in the shallow end consisting of one (1) ladder, stairs, or recessed treads. Where two (2) or more entries/exits are used, the ladders, stairs, or recessed treads may be used in combination. All treads shall have slip-resisting surfaces.

(2) S4214.2 Where water depths are twenty-four (24) inches or less at the pool wall, the areas shall be considered as providing their own natural mode for entry/exit.

(3) S4214.3 For pools over thirty (30) feet in width, both sides of the deep portions of the pool shall have entries/exits provided.

(4) S4214.4 A means of entry/exit for the shallow end shall be located between the shallow end wall and the cross section at point "D". Where required, entry/exit for the deep end shall be between the deep end wall and the cross section at point "B". (Refer to section 9(b) of this rule, Figure No. 4-1.)

(5) S4214.5 Ladders, stairs, recessed treads, or underwater seat benches shall be provided at the deep end of the pool if the water depth is over five (5) feet.

(6) S4214.6 The design and construction of protruding and recessed pool stairs shall conform to the following:

(A) Step treads shall have a minimum unobstructed horizontal depth of ten (10) inches and a minimum unobstructed surface area of two hundred forty (240) square inches.

(B) Risers at the center line of the treads shall have a maximum uniform height of twelve (12) inches with the bottom riser height allowed to vary plus or minus two (2) inches from the uniform riser height.

(C) The vertical distance between the pool coping edge, deck, or step surface, which shall be slip-resisting, and the uppermost step tread shall be a maximum of twelve (12) inches.

(7) S4214.7 If handrails are used with stairs, they shall conform to the following:

(A) Handrails, if removable, shall be installed in such a way that they cannot be removed without the use of tools.

(B) The leading edge of handrails facilitating stairs and pool entry/exit shall be not more than eighteen (18) inches plus or minus three (3) inches horizontally from the vertical plane of the bottom riser, where applicable.

(C) The outside diameter of handrails shall be between one (1) inch and two (2) inches.

(8) S4214.8 Underwater seats or benches may be provided as part of the stairs or recessed treads.

(9) S4214.9 The design and construction of pool ladders shall conform to the following:

(A) Pool ladders shall be made entirely of corrosion-resisting materials.

(B) Ladders shall provide two (2) handholds or two (2) handrails.

(C) Below the water level, there shall be a clearance of not more than six (6) nor less than three (3) inches between any ladder tread edge measured from the pool wall side of the tread and the pool wall.

(D) The clear distance between ladder handrails shall be a minimum of seventeen (17) inches and a maximum of twenty-four (24) inches.

(E) There shall be a uniform height between ladder treads with a seven (7) inch minimum distance and a twelve (12) inch maximum distance.

(F) Ladder treads shall have a minimum horizontal depth of one and one-half (1 1/2) inches.

(G) The vertical distance between the top tread and the pool coping or deck shall be a maximum of twelve (12) inches.

(10) S4214.10 The design and construction of recessed treads in the pool wall shall conform to the following:

(A) Recessed treads at the center line shall have a uniform vertical spacing of twelve (12) inches maximum and seven (7) inches minimum.

(B) The vertical distance between the pool coping edge, deck, or step surface and the uppermost recessed tread shall be a maximum of twelve (12) inches.

(C) Recessed treads shall have a minimum depth of five (5) inches and a minimum width of twelve (12) inches.

(D) Recessed treads shall drain into the pool to prevent accumulation of dirt.

(E) Each set of recessed treads shall be provided with a pair of handrails/grab rails/handholds to serve all treads and risers.

(Fire Prevention and Building Safety Commission; 675 IAC 14-4.3-283; filed Mar 25, 2011, 10:19 a.m.: 20110420-IR-675090789FRA; readopted filed Aug 4, 2011, 8:35 a.m.: 20110831-IR-675110254RFA)

675 IAC 14-4.3-284 Diving equipment

Authority: IC 22-13-2-2
Affected: IC 22-12-1-5; IC 22-13-2-7; IC 22-13-2-11; IC 22-15; IC 36-7

Sec. 284. Section S4215 Diving equipment is added as follows:

(1) S4215.1 Supports, platforms, stairs, and ladders for manufactured diving equipment shall be designed to carry the anticipated loads. Stairs and ladders shall be of corrosion-resisting material, easily cleanable, and with slip-resisting tread. All manufactured diving stands higher than twenty-one (21) inches measured from the deck to the top butt end of the board shall be provided with stairs or a ladder, or both. Step treads shall be self-draining.

(2) S4215.2 Platforms and manufactured diving equipment of one (1) meter or higher shall be protected with guard rails, which shall be at least thirty (30) inches above the diving board and extend to the edge of the pool wall.

(3) S4215.3 Manufactured diving equipment shall be:

(A) designed for swimming pool use; and

(B) installed in accordance with the manufacturer's recommendations provided with the equipment.

(4) S4215.4 A label shall be permanently affixed to the manufactured diving equipment or jump board and shall include not less than:

(A) manufacturer's name and address;

(B) board equipment length;

(C) identification as to diving or jump board;

(D) fulcrum setting specifications, if applicable;

(E) date of manufacture; and

(F) reference to manufacturer's safety standard, if any, that the board will meet.

(5) 4215.5 Manufactured diving equipment suitable for installation on a lower pool type may be installed on any higher pool type providing no less a water envelope is provided from the tip of the board than called for in the lower type. Manufactured diving equipment of a greater type, for example, Type III, shall not be installed on a pool of lesser type, for example, Type II. In addition, the following provisions apply:

(A) Manufactured diving equipment shall have slip-resisting tread surfaces.

(B) Manufactured diving equipment shall be permanently anchored to the pool deck. The edge of the board at the tip end shall be level with the water surface. The tip end of the board over the pool water surface may be higher than the butt end of the board. Refer to manufacturer's recommendations.

(Fire Prevention and Building Safety Commission; 675 IAC 14-4.3-284; filed Mar 25, 2011, 10:19 a.m.: 20110420-IR-675090789FRA; readopted filed Aug 4, 2011, 8:35 a.m.: 20110831-IR-675110254RFA)

675 IAC 14-4.3-285 Swimming pool slides

Authority: IC 22-13-2-2
Affected: IC 22-12-1-5; IC 22-13-2-7; IC 22-13-2-11; IC 22-15; IC 36-7

Sec. 285. Section S4216 Swimming pool slides is added as follows:

(1) S4216.1 Swimming pool slides shall meet the requirements of 16 CFR 1207, Safety Standard for Swimming Pool Slides, as published by the U.S. Consumer Product Safety Commission, 4330 East-West Highway, Bethesda, Maryland 20814. Slides, where provided for use with swimming pools, shall have a permanent label or separate certificate indicating conformance with the rules of the Consumer Product Safety Commission issued as 16 CFR 1207.

(2) S4216.2 Swimming pool slides in residential swimming pools shall terminate such that the following applies:

(A) The end of the slide is not more than twelve (12) inches above the pool deck.

(B) The depth of the water at the end of the slide meets the manufacturer's recommendations or thirty-six (36) inches, whichever is greater.

(C) The distance from the end of the slide is not less than twenty (20) feet measured along the axis of travel.

(D) The depth of water described in clause (B) or a gradually increasing depth shall be maintained for not less than ten (10) feet beyond the end of the slide. This depth of water may gradually decrease beyond that point to a minimum water depth of twenty-four (24) inches. For this requirement a maximum slope of one (1) in seven (7) (1:7) shall be considered "gradual".

(3) S4216.3 Swimming pool slides shall be installed in accordance with the manufacturer's installation instructions and specifications.

(Fire Prevention and Building Safety Commission; 675 IAC 14-4.3-285; filed Mar 25, 2011, 10:19 a.m.: 20110420-IR-675090789FRA; readopted filed Aug 4, 2011, 8:35 a.m.: 20110831-IR-675110254RFA)

675 IAC 14-4.3-286 Circulation system

Authority: IC 22-13-2-2
Affected: IC 22-12-1-5; IC 22-13-2-7; IC 22-13-2-11; IC 22-15; IC 36-7

Sec. 286. Section S4217 Circulation system is added as follows:

(1) S4217.1 A circulation system consisting of pumps, piping, return inlets and suction outlets, filters, and other necessary equipment shall be provided for complete circulation of water through all parts of the pool. This circulation system shall be capable of maintaining water clarity and chemistry requirements.

(2) S4217.2 The equipment shall be of adequate size to turn over the entire pool water capacity at least once every twelve (12) hours. Water clarity shall be maintained. When standing at the pool's edge at the deep end, the deepest portion of the pool floor shall be visible.

(3) S4217.3 Circulation system components that require replacement or servicing shall be:

(A) accessible for inspection, repair, or replacement; and

(B) installed according to the manufacturer's instructions.

(4) S4217.4 Pool equipment shall be:

(A) properly supported to prevent damage from misalignment, settlement, etc.; and

(B) mounted so as to minimize the potential for the accumulation of debris and moisture following manufacturer's instructions.

(5) S4217.5 The water velocity in the pool piping shall not exceed ten (10) feet per second for discharge piping and eight (8) feet per second for suction piping, unless summary calculations are provided to show that the greater flow is possible with the pump and piping provided. In copper pipes, the velocity shall not exceed eight (8) feet per second for suction and discharge piping. Pool piping shall be sized to permit the rated flows for filtering.

(6) S4217.6 The circulation system piping and fittings shall be:

(A) nontoxic;

(B) considered to be process piping; and

(C) of material able to withstand operating pressures and operating conditions.

(7) S4217.7 Equipment shall be designed and fabricated to drain the pool water from the equipment, together with exposed face piping, by removal of drain plugs and manipulating valves, or by other methods. Refer to manufacturer's recommendations for specific information on draining the system.

(8) S4217.8 A pressure or vacuum gauge or other means of indicating system condition shall be provided in the circulation

system in an easily readable location.

(9) S4217.9 Time clocks may be used to set the operating period of the circulation system. When time clocks are used, they shall also govern the operating time of appurtenant devices such as chemical/disinfectant feeders, slurry feeders, heaters, etc., that are dependent upon circulation pump flow.

(10) S4217.10 Written operation and maintenance instructions shall be provided for the circulation system.

(Fire Prevention and Building Safety Commission; 675 IAC 14-4.3-286; filed Mar 25, 2011, 10:19 a.m.: 20110420-IR-675090789FRA; readopted filed Aug 4, 2011, 8:35 a.m.: 20110831-IR-675110254RFA)

675 IAC 14-4.3-287 Filters

Authority: IC 22-13-2-2
Affected: IC 22-12-1-5; IC 22-13-2-7; IC 22-13-2-11; IC 22-15; IC 36-7

Sec. 287. Section S4218 Filters is added as follows:

(1) S4218.1 Filters shall be designed so that after cleaning per manufacturer's instructions the system can provide the water clarity noted in section S4217.1 of this rule.

(2) S4218.2 Filters shall be designed so that filtration surfaces can be inspected and serviced.

(3) S4218.3 On pressure-type filters, a means shall be provided to permit the release of internal pressure.

(4) S4218.4 Any filter incorporating an automatic internal air release as its principal means of air release shall have lids which provide a slow and safe release of pressure as a part of its design.

(5) S4218.5 Any separation tank used in conjunction with any filter tank shall have a manual means of air release or a lid that provides a slow and safe release of pressure as it is opened as a part of its design.

(6) S4218.6 Pressure filters and separation tanks shall:

(A) have operation and maintenance instructions permanently installed on the filter or separation tank; and

(B) include a precautionary statement warning not to start up the system after maintenance without first opening the air release and proper reassembly of the filter and separation tank.

The statement shall be visible and noticeable within the area of the air release.

(7) S4218.7 Piping furnished with the filter shall be of suitable material capable of withstanding one and one-half (1 1/2) times the working pressure. The suction piping shall not collapse when there is a complete shutoff of flow on the suction side of the pump.

(Fire Prevention and Building Safety Commission; 675 IAC 14-4.3-287; filed Mar 25, 2011, 10:19 a.m.: 20110420-IR-675090789FRA; readopted filed Aug 4, 2011, 8:35 a.m.: 20110831-IR-675110254RFA)

675 IAC 14-4.3-288 Pumps

Authority: IC 22-13-2-2
Affected: IC 22-12-1-5; IC 22-13-2-7; IC 22-13-2-11; IC 22-15; IC 36-7

Sec. 288. Section S4219 Pumps is added as follows:

(1) S4219.1 A pump and motor shall be provided for circulation of the pool water. Performance of all pumps shall meet or exceed the conditions of flow required for filtering, cleaning, if applicable, and the filters against the total dynamic head developed by the complete system.

(2) S4219.2 With all pressure filter systems a cleanable strainer or screen shall be provided upstream of the circulation pumps to remove solids, debris, hair, lint, etc.

(3) S4219.3 Pumps and motors shall be accessible for inspection and service.

(4) S4219.4 The design and construction of the pumps and component parts shall provide safe operation that is not hazardous to the operator or maintenance personnel.

(5) S4219.5 Where a mechanical pump seal is provided, components of the seal shall be corrosion-resisting and capable of operating under conditions normally encountered in pool operation.

(6) S4219.6 Proper direction of rotation for the pump shall be clearly indicated on the pump.

(7) S4219.7 All motors shall:

(A) have as a minimum an open drip-proof enclosure; and

(B) be constructed electrically and mechanically to perform satisfactorily and safely under the conditions of load and environment normally encountered in swimming pool installations.

(8) S4219.8 Motors shall be capable of operating the pumps under full load with a voltage variation of plus or minus ten percent (10%) from the nameplate rating. If the maximum service factor of the motor is exceeded (at full voltage), the manufacturer shall indicate this on the pump curve.

(9) S4219.9 All motors shall have thermal or current overload protection, either built-in or in the line starter, to provide locked rotor and running protection.

(10) S4219.10 Where the pump is below the waterline, valves shall be installed on permanently connected suction and discharge lines, located in an accessible place outside the walls of the pool, where they shall be readily and easily accessible for maintenance and removal of the pump.

(Fire Prevention and Building Safety Commission; 675 IAC 14-4.3-288; filed Mar 25, 2011, 10:19 a.m.: 20110420-IR-675090789FRA; readopted filed Aug 4, 2011, 8:35 a.m.: 20110831-IR-675110254RFA)

675 IAC 14-4.3-289 Return inlets and suction outlets

Authority: IC 22-13-2-2
Affected: IC 22-12-1-5; IC 22-13-2-7; IC 22-13-2-11; IC 22-15; IC 36-7

Sec. 289. Section S4220 Return inlets and suction outlets is added as follows:

(1) S4220.1 Return inlets and suction outlets shall be provided and arranged to produce a uniform circulation of water and maintain a uniform disinfectant residual throughout the entire pool. Where skimmers are used, the return inlets shall be located so as to help bring floating particles within range of the skimmers.

(2) S4220.2 The number of return inlets shall be based on a minimum of one (1) return inlet per six hundred (600) square feet of pool surface area, or fraction thereof. Return inlet fittings shall be installed of sufficient pipe size or quantity to allow a full design turnover rate of the circulation system in accordance with the manufacturer's recommendations for return inlets.

(3) S4220.3 Return inlets from the circulation system shall be designed so as not to constitute a hazard to the bather.

(4) S4220.4 The pool shall not be operated if the suction outlet grate is missing, broken, or secured in such a way that it can be removed without the use of tools.

(5) S4220.5 If the suction outlet system, such as a filtration system, booster system, automatic cleaning system, solar system, etc., has a single suction outlet, or multiple suction outlets that can be isolated by valves, each suction outlet shall protect against bather entrapment by:

(A) an antivortex cover;

(B) a twelve (12) inch by twelve (12) inch (12 × 12) grate or larger; or

(C) other means acceptable to the local authority.

(6) S4220.6 Where provided, the vacuum cleaner fittings shall be located in accessible positions at least six (6) inches and not greater than eighteen (18) inches below the minimum operating water level or as an attachment to the skimmers.

(Fire Prevention and Building Safety Commission; 675 IAC 14-4.3-289; filed Mar 25, 2011, 10:19 a.m.: 20110420-IR-675090789FRA; readopted filed Aug 4, 2011, 8:35 a.m.: 20110831-IR-675110254RFA)

675 IAC 14-4.3-290 Surface skimmer systems

Authority: IC 22-13-2-2
Affected: IC 22-12-1-5; IC 22-13-2-7; IC 22-13-2-11; IC 22-15; IC 36-7

Sec. 290. Section S4220 Surface skimmer systems is added as follows:

(1) S4220.1 A surface skimming system shall be:

(A) provided on all residential swimming pools; and

(B) designed and constructed to skim the pool surface when the water level is maintained within the operational parameters of the system's rim or weir device.

(2) S4220.2 Skimming devices shall be designed and installed so as not to constitute a hazard to the bather.

(3) S4220.3 Where automatic surface skimmers are used as the sole overflow system, at least one (1) surface skimmer shall be provided for each eight hundred (800) square feet or fraction thereof of the water surface area. Nominal recessed areas such as stairs, spas, etc., shall not be considered in the calculation. Where skimmers are used, they shall be located to maintain effective skimming action over the entire surface of the pool.

(Fire Prevention and Building Safety Commission; 675 IAC 14-4.3-290; filed Mar 25, 2011, 10:19 a.m.: 20110420-IR-675090789FRA; readopted filed Aug 4, 2011, 8:35 a.m.: 20110831-IR-675110254RFA)

675 IAC 14-4.3-291 Electrical requirements

Authority: IC 22-13-2-2
Affected: IC 22-12-1-5; IC 22-13-2-7; IC 22-13-2-11; IC 22-15; IC 36-7

Sec. 291. Section E4221 Electrical requirements is added as follows: E4221.1 The requirements of 675 IAC 17, the Indiana Electrical Code, shall be followed in the installation of all electrical equipment wiring or appliances in the pool area or vicinity of the pool's circulation system. *(Fire Prevention and Building Safety Commission; 675 IAC 14-4.3-291; filed Mar 25, 2011, 10:19 a.m.: 20110420-IR-675090789FRA; readopted filed Aug 4, 2011, 8:35 a.m.: 20110831-IR-675110254RFA)*

675 IAC 14-4.3-292 Heaters

Authority: IC 22-13-2-2
Affected: IC 22-12-1-5; IC 22-13-2-7; IC 22-13-2-11; IC 22-15; IC 36-7

Sec. 292. Section E4222 Heaters is added as follows:

(1) E4222.1 Swimming pool heaters shall be of an "approved" type.

(2) E4222.2 Heaters shall be properly sized.

(3) E4222.3 The heaters shall be installed according to the manufacturer's recommendations, but not less than the following:

(A) The heater shall be installed on a concrete (or equivalent) base unless it is specifically designed for installation on a combustible surface.

(B) When installing the heater, adequate clearances shall be maintained on all sides and over the top of the unit. Consult manufacturer's instructions for proper clearances.

(C) In order to assure proper combustion, the heater shall have adequate ventilation installed as follows:

(i) When installing a heater indoors, proper openings to the room are required. The heater shall be installed in accordance with 675 IAC 18, the Indiana Mechanical Code, and the manufacturer's recommendations for properly sized air openings to the enclosure.

(ii) All fossil fuel heaters shall be supplied with some type of venting system for either indoor or outdoor installation. These draft or venting devices shall be installed according to the manufacturer's recommendations and shall not be modified.

(iii) When installing a heater that will be using propane gas, special precautions shall be noted. Propane gas is heavier than air and, therefore, can create special problems when the heater is installed in a pit or in an enclosed area. Whenever installing a heater with propane gas, the manufacturer's ventilation recommendations shall be followed.

(4) E4222.4 The heater gas supply and pipe sizing shall:

(A) be adequate; and

(B) comply with manufacturer's recommendations.

When installing a gas-fired heater, the gas line shall be run from the gas meter as directly as practical.

(5) E4222.5 The heater circulation system shall comply with the manufacturer's recommendations. Precautions shall be taken to avoid siphonage of hot water into the pump or filter. When manufacturers recommend metal pipe, that is, copper, heat sinks, they shall be installed vertically connected to the heater to prevent heat damage to plastic circulation pipe. Heater piping shall be designed to avoid excessive friction losses through the pipe or bypass valves, or both, required. When installing bypass valves, caution shall be taken to ensure adequate flow through the heater at all times.

(6) E4222.6 The water piping system shall be installed according to the manufacturer's recommendations. When

manufacturers recommend precautions to eliminate siphonage so that the heater does not destroy the filter or any plastic pipe that is being used, the manufacturer's recommendations shall be followed. NOTE: When installing a heater and a filter system, adequate provisions shall be made so that the heater does not cause excessive pressure drop to the filter system. Refer to manufacturer's requirements or recommendations, or both, for installation of bypass valves. Excessive flow that causes pressure drop can be eliminated by the installation of an external or an automatic bypass valve. When installing a bypass valve, caution shall be noted so that there is always adequate flow through the heater.

(7) E4222.7 A time clock is recommended, and when used it shall be set long enough to properly filter the water and allow enough time for proper heating of the pool. It is recommended that a dual time clock or fireman's switch be used in conjunction with the heater to shut the heater off approximately one-half (1/2) hour before the filter system shuts down.

(Fire Prevention and Building Safety Commission; 675 IAC 14-4.3-292; filed Mar 25, 2011, 10:19 a.m.: 20110420-IR-675090789FRA; readopted filed Aug 4, 2011, 8:35 a.m.: 20110831-IR-675110254RFA)

675 IAC 14-4.3-293 Water supply

Authority: IC 22-13-2-2
Affected: IC 22-12-1-5; IC 22-13-2-7; IC 22-13-2-11; IC 22-15; IC 36-7

Sec. 293. Section S4223 Water supply is added as follows:

(1) S4223.1 The water supply serving the pool, which may come from a variety of sources, shall meet 327 IAC, the rules of the water pollution control board, before the bather uses the pool.

(2) S4223.2 No direct mechanical connection shall be made between the potable water supply and the swimming pool, chlorinating equipment, or the system of piping for the pool unless it is protected against backflow and siphonage in a manner approved by 675 IAC 16, the Indiana Plumbing Code, or through an air gap meeting that same code.

(3) S4223.3 An over-the-rim spout, if used, shall be located under a diving board, adjacent to a ladder, or otherwise properly shielded so as not to create a hazard. Its open end shall:

(A) have no sharp edges; and

(B) not protrude more than two (2) inches beyond the edge of the pool.

(Fire Prevention and Building Safety Commission; 675 IAC 14-4.3-293; filed Mar 25, 2011, 10:19 a.m.: 20110420-IR-675090789FRA; readopted filed Aug 4, 2011, 8:35 a.m.: 20110831-IR-675110254RFA)

675 IAC 14-4.3-294 Wastewater disposal

Authority: IC 22-13-2-2
Affected: IC 22-12-1-5; IC 22-13-2-7; IC 22-13-2-11; IC 22-15; IC 36-7

Sec. 294. Section S4224 Wastewater disposal is added as follows: S4224.1 Backwash water shall be discharged into a sanitary sewer through an approved air gap or into an approved subsurface disposal system or by other means in accordance with 675 IAC 16, the Indiana Plumbing Code, and 327 IAC, the rules of the water pollution control board. *(Fire Prevention and Building Safety Commission; 675 IAC 14-4.3-294; filed Mar 25, 2011, 10:19 a.m.: 20110420-IR-675090789FRA; readopted filed Aug 4, 2011, 8:35 a.m.: 20110831-IR-675110254RFA)*

675 IAC 14-4.3-295 Disinfectant; oxidation; chemical feeder equipment

Authority: IC 22-13-2-2
Affected: IC 22-12-1-5; IC 22-13-2-7; IC 22-13-2-11; IC 22-15; IC 36-7

Sec. 295. Section S4225 Disinfectant; oxidation; chemical feeder equipment is added as follows:

(1) S4225.1 Disinfectant equipment, oxidation equipment, and chemical feeders, hereafter referred to jointly as "equipment", shall be capable of precisely introducing a sufficient quantity of an approved disinfecting agent or other chemical to maintain one (1) milligram per liter of free chlorine residual.

(2) S4225.2 Manufacturer's instructions shall be used in installing chemical feeders. The installation and use of chemical feeders shall conform to the following:

(A) Where using chemical feeders, it is extremely important that they be installed downstream from the filter and heater. An exception is equipment specifically labeled for feeding to the suction side of the pump.

(B) If the chemical feeder is equipped with its own pump, it shall be installed so it introduces the gas or solution downstream from the heater and, if possible, at a position lower than the heater outlet fitting.

(C) Chemical feed pumps shall be wired so they cannot operate unless the filter pump is running. If the chlorinator has an independent timer, the filter and chemical feed pump timers shall be interlocked.

(D) A check valve shall be installed in the piping between the heater and the point of chemical feed.

(3) S4225.3 The installation of ozone generating equipment shall be limited to low ozone output generating equipment. The installation and use of ozone generating equipment shall conform to the following:

(A) Installation of ozone generating equipment shall allow for indications of operation or malfunction to be easily observed. The equipment shall be installed in a manner such that a malfunction will not endanger operators or pool users.

(B) Ozone generating equipment shall be used in conjunction with other chemical treatments to meet the chemical operating parameters in this section. Normal maintenance and monitoring of water chemistry shall be followed.

(C) If the equipment is capable of exposing maintenance or service personnel to ozone concentrations exceeding five hundred (500) parts per million, a self-contained breathing apparatus approved for ozone usage shall be provided. If a distinct, pungent odor is smelled when the ozone generating equipment is operating, the equipment shall be shut down, and the area shall be ventilated. The equipment shall be inspected and repaired as necessary by qualified service personnel.

(D) Manufacturer's recommendations shall be used to determine where and how ozone shall be injected.

(Fire Prevention and Building Safety Commission; 675 IAC 14-4.3-295; filed Mar 25, 2011, 10:19 a.m.: 20110420-IR-675090789FRA; readopted filed Aug 4, 2011, 8:35 a.m.: 20110831-IR-675110254RFA)

675 IAC 14-4.3-296 Safety features

Authority: IC 22-13-2-2
Affected: IC 22-12-1-5; IC 22-13-2-7; IC 22-13-2-11; IC 22-15; IC 36-7

Sec. 296. Section S4226 Safety features is added as follows:

(1) S4226.1 A residential pool shall be provided with a suitable handhold around its perimeter in areas where depths exceed three (3) feet six (6) inches. Handholds shall be provided no further apart than four (4) feet and shall consist of any one (1) or a combination of items listed as follows:

(A) Coping, ledge, or deck along the immediate top edge of the pool that provides a slip-resisting surface of at least four (4) inches minimum horizontal width and located at or not more than twelve (12) inches above the waterline.

(B) Ladders, stairs, or seat ledges.

(C) A secured rope or railing placed at or not more than twelve (12) inches above the waterline.

(2) S4226.2 Rope anchor devices shall be installed at a minimum of one (1) foot and a maximum of two (2) feet on the shallow end side of a point of change in floor slope. In pools where the slope change occurs in water depths less than four (4) feet six (6) inches, a transition rope supported by buoys shall be installed.

(3) S4226.3 Access to residential pools shall be restricted by one (1) of the following means:

(A) Walls or fencing not less than four (4) feet high and completely surrounding the pool and deck area with the exception of self-closing and latching gates and doors, both capable of being locked.

(B) Other means not less than four (4) feet high and deemed impenetrable by the enforcing authority at the time of construction and completely surrounding the pool and deck area when the pool is not in use.

(C) A combination of clauses (A) and (B) that completely surrounds the pool and deck with the exception of self-closing and latching gates and doors which are capable of being locked. This applies to clauses (A) and (B) and this clause only.

(D) A power safety pool cover that:

(i) shall provide a continuous connection between the cover and the deck, so as to prohibit access to the pool when the cover is completely drawn over the pool;

(ii) shall be mechanically operated such that the cover cannot be drawn open or retracted without the use of a:

(AA) key; or

(BB) key and switch; or

(CC) touch pad with a personal access code;

(iii) is installed with track, rollers, rails, guides, or other accessories necessary to accomplish items (i) and (ii), in accordance with the manufacturer's instructions; and

(iv) shall bear an identification tag indicating that the cover satisfies the requirements of ASTM F 1346–19 (Reapproved 2003), Standards Performance Specification for Safety Covers and Labeling Requirements for All Covers for Swimming Pools, Spas, and Hot Tubs, as published by ASTM International, 100 Barr Harbor Drive, PO Box C700, West Conshohocken, Pennsylvania 19428-2959 for power safety pool covers.

(4) S4226.4 Not less than the following lifesaving equipment shall be installed with each residential swimming pool:

(A) A ring or throwing buoy fitted with forty (40) feet of one-fourth (1/4) inch diameter line.

(B) A pole not less than twelve (12) feet in length.

(C) Access to a telephone.

(Fire Prevention and Building Safety Commission; 675 IAC 14-4.3-296; filed Mar 25, 2011, 10:19 a.m.: 20110420-IR-675090789FRA; readopted filed Aug 4, 2011, 8:35 a.m.: 20110831-IR-675110254RFA)

*