Received On: February 15, 2013
IURC 30-DAY Filing No.: 3115
Indiana Utility Regulatory Commission

ipl
an AES company

February 15, 2013

Secretary of the Commission
Indiana Utility Regulatory Commission
National City Center
101 West Washington Street, Suite 1500 East
Indianapolis, Indiana 46204

Dear Secretary:

Pursuant to 170 IAC 1-6 ("Rule 6"), the Thirty-Day Administrative Filing Procedures and Guidelines Rules, Indianapolis Power & Light Company ("IPL") submits herewith for approval a Power Purchase Agreement for Qualifying Renewable Energy Power Production Facilities between Duke Realty Limited Partnership, Inovateus Solar LLC and IPL dated February 14, 2013 ("Agreement").

Specifically 170 IAC 1-6 Section 3(6) allows for the filing of this contract as a "filing for which the commission has already approved or accepted the procedure for the change." The Commission approved IPL's Rate REP – Renewable Energy Production in its Order dated February 10, 2010 in Cause No. 43623 (Phase I) and ordered (at 62) that "[a]ny long-term contracts between IPL and its customers wishing to sell renewable energy under Rate REP shall be submitted to the Commission for approval utilizing the 30-day filing process."

Rate REP – Renewable Energy Production, the Commission-approved tariff under which the Agreement was entered, was created so that customers may alternatively choose to participate in a renewable energy feed-in rate for generation resources with capacity ratings ranging from 50 kW (20 kW for solar) to 10 MW. Rate REP provides pricing unique to the type of renewable energy produced and allows for long-term contracting. In its Order dated March 7, 2012 in Cause No. 44018, the Commission approved further changes to Rate REP with which this agreement complies.

In support of this 30-day filing IPL is submitting herewith (1) a copy of the Commission-approved Rate REP – Renewable Energy Production, I.U.R.C. No. E-16, 1st Revised No. 124, 124.1, 124.2 and 124.3; (2) a verified statement by the Company affirming that customers have been notified as required under Rule 6, stating in detail the means used for notification, and copies of any written means of notification; (3) a copy of the publisher's affidavit; and (4) a copy

Received On: February 15, 2013
IURC 30-DAY Filing No.: 3115
Indiana Utility Regulatory Commission

of the Power Purchase Agreement. By copy of this letter, the Office of Utility Consumer Counselor is being provided with a copy of this 30-day filing.

IPL appreciates your assistance in processing this request through the Commission's 30-Day Filing procedures. The contact information regarding this filing is as follows:

John E. Haselden, P.E.
Indianapolis Power & Light Company
One Monument Circle
Indianapolis, Indiana 46204
Phone: 317-261-6629
Fax: 317-261-5867
Email: john.haselden@aes.com

Sincerely,

John E. Haselden, P.E.

Enclosures

cc: A. David Stippler, Office of Utility Consumer Counselor – w/enclosures via email

Received On: February 15, 2013
IURC 30-DAY Filing No.: 3115
Indiana Utility Regulatory Commission

POWER PURCHASE AGREEMENT

FOR QUALIFYING RENEWABLE ENERGY POWER PRODUCTION FACILITIES

INDIANAPOLIS POWER & LIGHT COMPANY,

DUKE REALTY LIMITED PARTNERSHIP

AND

INOVATEUS SOLAR, LLC

FEBRUARY 14, 2013

Received On: February 15, 2013
IURC 30-DAY Filing No.: 3115
Indiana Utility Regulatory Commission

EXHIBITS

EXHIBIT A INTERCONNECTION AGREEMENT AMONG THE PARTIES

EXHIBIT B AGREEMENT FOR THE BENEFIT OF THE FINANCING PARTIES

Received On: February 15, 2013
IURC 30-DAY Filing No.: 3115
Indiana Utility Regulatory Commission

POWER PURCHASE AGREEMENT
FOR QUALIFYING RENEWABLE ENERGY POWER PRODUCTION FACILITIES

THIS POWER PURCHASE AGREEMENT FOR QUALIFYING RENEWABLE ENERGY POWER PRODUCTION FACILITIES ("Agreement") is made and entered into this 14th day of February, 2013 ("Effective Date"), by and between Indianapolis Power & Light Company, an Indiana corporation with its principal office located at One Monument Circle, Indianapolis, Indiana 46204 ("Company"), and Inovateus Solar, LLC, an Indiana company with its principal office located at 19890 State Line Road, South Bend, Indiana 46637 ("Producer") and Duke Realty Limited Partnership, an Indiana limited liability partnership with its principal office located at 600 East 96th Street, Suite 100, Indianapolis, Indiana 46240 ("Customer"). Company, Producer and Customer are hereinafter sometimes referred to individually as "Party" or collectively as "Parties".

WITNESSETH:

WHEREAS, Producer desires to sell renewable electric power inclusive of all rights to its attendant Environmental Attributes and the Company desires to purchase the same and recover such costs for retail ratemaking through the authority granted under Rate REP ("Renewable Energy Production") as further approved by the IURC, and

WHEREAS, Customer is a customer of IPL and consents to and benefits from Producer locating the Facility on property lawfully owned by Customer, as further described herein; and

WHEREAS, Producer is installing, or has installed, Qualifying Renewable Energy Power Production Facilities (the "Facility") used to interconnect and operate in parallel with Company's electric system at the Customer location designated below ("Location"), which Facility is more fully described in that certain Interconnection Agreement by and between Producer, Customer and Company and dated February 8, 2013, as attached hereto as Exhibit A and incorporated herein by this Agreement, and as follows:

Location: (Building 87), 5355 W. 76th Street, Indianapolis, IN 46268

Nameplate Capacity: 4,000 kW

Estimated Annual Production: 5,526,000 kWh

Type of Qualifying Technology: Solar Photovoltaic

NOW, THEREFORE, in consideration thereof, Producer, Customer and Company agree as follows:

Received On: February 15, 2013
IURC 30-DAY Filing No.: 3115
Indiana Utility Regulatory Commission

1. DEFINITIONS.

1.1 Definitions. In addition to other terms specifically defined elsewhere in the Agreement, where capitalized, the following words and phrases shall be defined as follows:

(a) "Affiliate" means, with respect to any specified Person, any other Person directly or indirectly controlling, controlled by or under common control with such specified Person.

(b) "Applicable Law" means, with respect to any Person, any constitutional provision, law, statute, rule, regulation, ordinance, treaty, order, decree, judgment, decision, certificate, holding, injunction, registration, license, franchise, permit, authorization, guideline, Governmental Approval, consent or requirement of any Governmental Authority having jurisdiction over such Person or its property, enforceable at law or in equity, including the interpretation and administration thereof by such Governmental Authority.

(c) "Assignment" has the meaning set forth in Section 13.

(d) "Bankruptcy Event" means with respect to a Party, that either:

(i) such Party has (A) applied for or consented to the appointment of, or the taking of possession by, a receiver, custodian, trustee or liquidator of itself or of all or a substantial part of its property; (B) admitted in writing its inability to pay its debts as such debts become due; (C) made a general assignment for the benefit of its creditors; (D) commenced a voluntary case under any bankruptcy law; (E) filed a petition seeking to take advantage of any other law relating to bankruptcy, insolvency, reorganization, winding up, or composition or readjustment of debts; or (F) taken any corporate or other action for the purpose of effecting any of the foregoing; or

(ii) a proceeding or case has been commenced without the application or consent of such Party in any court of competent jurisdiction seeking (A) its liquidation, reorganization, dissolution or winding-up or the composition or readjustment of debts or, (B) the appointment of a trustee, receiver, custodian, liquidator or the like of such Party under any bankruptcy law, and such proceeding or case has continued undefended, or any order, judgment or decree approving or ordering any of the foregoing shall be entered and continue unstayed and in effect for a period of sixty (60) days.

(e) "Business Day" means any day other than Saturday, Sunday or any other day on which banking institutions in Indiana are required or authorized by Applicable Law to be closed for business.

(f) "Company" means Indianapolis Power & Light Company.

Received On: February 15, 2013
IURC 30-DAY Filing No.: 3115
Indiana Utility Regulatory Commission

(g) "Company Default" has the meaning set forth in Section 11.4(a).

(h) "Commercial Operation Date" means the date on which testing in accordance with such methods, acts, guidelines, standards and criteria reasonably accepted or followed by the majority of photovoltaic system integrators in the United States indicate that the System is capable of generating electric energy for four (4) continuous hours, using such instruments and meters as have been installed for such purposes, and the interconnection to the Company's electric grid and all review and approvals have been provided by the applicable utility and the State of Indiana.

(i) "Commercially Reasonable Efforts" means, with respect to any action required to be made, attempted or taken by a Party under this Agreement, the level of effort in light of the facts known to such Party at the time a decision is made that: (a) can reasonably be expected to accomplish the desired action at a reasonable cost; (b) is consistent with Good Electric Industry Practices; and (c) takes into consideration the amount of advance notice required to take such action, the duration and type of action and the competitive environment in which such action occurs.

(j) "Confidential Information" has the meaning set forth in Section 15.1.

(k) "Customer" means Duke Realty Limited Partnership

(l) "Effective Date" has the meaning set forth in the Introductory Paragraph above.

(m) "Environmental Attributes" have the meaning set forth in Rate REP of the Tariff.

(n) "Facility" means the Qualifying Renewable Energy Power Production Facilities described in Exhibit A of the Interconnection Agreement.

(o) "Facility Operations" means Producer's operation, maintenance and repair of the Facility.

(p) "Financing Party" means, as applicable (i) any Person (or its agent) from whom Producer (or an Affiliate of Producer) leases the Facility or (ii) any Person (or its agent) who has made or will make a loan to or otherwise provide capital to Producer (or an Affiliate of Producer) with respect to the Facility.

(q) "Force Majeure" means any cause or event not reasonably within the control of the Party claiming Force Majeure, including, but not limited to, the following: acts of God, strikes, lockouts, or other industrial disturbances; acts of public enemies; orders or permits or the absence of the necessary orders or permits of any kind which have been properly

Received On: February 15, 2013
IURC 30-DAY Filing No.: 3115
Indiana Utility Regulatory Commission

applied for from a Governmental Authority; unavailability of material used in connection with the construction and operation of the Facility; extraordinary delay in transportation; unforeseen soil conditions; equipment, material, supplies, labor or machinery shortages; epidemics; landslides; lightning; earthquakes; fires; hurricanes; tornadoes; storms; floods; washouts; drought; arrest; war; civil disturbances; explosions; breakage or accident to machinery, transmission lines, pipes or canals; partial or entire failure of utilities; breach of contract by any supplier, contractor, subcontractor, laborer or materialman; sabotage; injunction; blight; famine; blockade; or quarantine.

(r) "Good Electric Industry Practices" means the practices, methods, standards and acts engaged in or approved by a significant portion of the independent electric power generation industry pertaining to solar energy facilities of the type, similar size and location to the Facility that, at a particular time, in the exercise of reasonable judgment, in light of the facts that are known, or reasonably should have been known, at the time a decision was made, would have been expected to accomplish the desired result in a manner consistent with law, regulation, permits, codes, standards, equipment manufacturer's recommendations, reliability, safety, environmental protection, economy, and expedition. For purposes of this Agreement, Good Electric Industry Practices is not intended to be limited to the optimum practice, method, standard or act to the exclusion of all others, but rather to those practices, methods, standards and acts generally acceptable or approved by a significant portion of the independent electric power generation industry for solar energy facilities in the relevant region, during the relevant period, as described in the immediate preceding sentence.

(s) "Governmental Approval" means any approval, consent, franchise, permit, certificate, resolution, concession, license, or authorization issued by or on behalf of any applicable Governmental Authority.

(t) "Governmental Authority" means any federal, state, regional, county, town, city, or municipal government, whether domestic or foreign, or any department, agency, bureau, or other administrative, regulatory or judicial body of any such government, excluding Customer.

(u) "Indemnified Party" has the meaning set forth in Section 16.1.

(v) "IURC" means the Indiana Utility Regulatory Commission.

(w) "Losses" means all losses, liabilities, claims, demands, suits, causes of action, judgments, awards, damages, cleanup and remedial obligations, interest, fines, fees, penalties, costs and expenses (including all reasonable attorneys' fees and other costs and expenses incurred in defending any

Received On: February 15, 2013
IURC 30-DAY Filing No.: 3115
Indiana Utility Regulatory Commission

such claims or other matters or in asserting or enforcing any indemnity obligation).

(x) "Permitted Recipients" has the meaning set forth in Section 15.1.

(y) "Person" means an individual, partnership, corporation, limited liability company, business trust, joint stock company, trust, unincorporated association, joint venture, firm, or other entity, or a Governmental Authority.

(z) "Point of Delivery" means the physical location, as set forth on Exhibit A, where the Facility connects to Company's electric grid, at which point custody and control of the electricity generated by the Facility is transferred from Producer to Company.

(aa) "Producer" means Inovateus Solar, LLC.

(bb) "Producer Default" has the meaning set forth in Section 11.3(a).

(cc) "Stated Rate" means a rate per annum equal to the lesser of (a) the "prime rate" (as reported in The Wall Street Journal) plus one percent (1%) and (b) the maximum rate allowed by Applicable Law.

(dd) "System Emergency" means a condition on Company's system which is liable to result in imminent significant disruption of service to customers or in substantial deviation from normal service standards or which is imminently liable to endanger life or property.

(ee) "Tariff" means Company's I.U.R.C. No. E-16 tariff on file with the IURC, as amended from time to time, or its successor

2. APPLICATION

It is understood and agreed that this Agreement applies only to the operation of the Facility.

3. TARIFF

This Agreement is entered into subject to the terms of Company's Rate REP as set forth in its Tariff.

4. INTERCONNECTION

4.1 Interconnection Agreement. Company, Producer and Customer have entered into an Interconnection Agreement providing for the interconnection of the Facility to Company's electrical system, a copy of which is attached hereto as Exhibit A.

Received On: February 15, 2013
IURC 30-DAY Filing No.: 3115
Indiana Utility Regulatory Commission

4.2 Facility Operation Consistent with Interconnection Agreement. Any changes in Facility Operations that necessitate changes in Company's operations must be approved prior to implementation and Producer must pay for any required improvements to Company's system. Producer shall install, operate, and maintain in good order such relays, locks and seals, breakers, automatic synchronizer, and other control and protective apparatus as shall be designated by Company for operation parallel to its system consistent with the Interconnection Agreement. Producer shall bear full responsibility for the installation and safe operation of this equipment. Breakers capable of isolating the Facility from Company shall at all times be immediately accessible to Company. Company may isolate, and shall have no obligation to purchase energy or capacity from Producer at its own discretion if Company reasonably believes continued parallel operation with the Facility creates or contributes to a System Emergency. Producer agrees that, without the prior written permission from Company, no changes shall be made to the configuration of the Facility, as that configuration is described in Exhibit A, and no relay or other control or protection settings specified in the Interconnection Agreement shall be set, reset, adjusted or tampered with, except to the extent necessary to verify that the Facility complies with Company approved settings. In the event Producer changes the configuration of the Facility without Company's prior, written consent, Company may suspend purchases from the Facility without obligation to pay for any energy, capacity or Environmental Attributes during the suspension until Producer demonstrates to Company the configuration is consistent with Exhibit A.

4.3 Metering of Energy. To properly record numbers of kilowatt-hours for, respectively, purchase and sale, the following configurations shall be the basis for metering:

(a) Where such measurement is appropriate for measurement of energy, the circuit shall include at minimum one monodirectional meter between, at one side, the Company system and, on the other side, the load and a bidirectional meter between, at one side, the Company system and on the other side, the Facility and any load associated with it;

(b) Where such measurement is appropriate for measurement of energy, the circuit shall include a monodirectional meter between the on site load and the Company and, in a series arrangement, two monodirectional meters between the Facility and the Company system;

(c) The meter measuring purchases by Company shall be of a design to record time periods, and shall be capable of electronically transmitting instantaneous readings; or

(d) Other metering arrangements shall be the subject of negotiations between Company and Producer.

4.4 Interference with Customer. Company shall have no responsibility to ensure the Facility does not interfere with equipment operated by Customer. Customer shall not hold Company responsible for any interruption or damage caused to its operations or the Location by virtue of the Facility. Customer has considered its agreement with Producer and has concluded, through representation with its own legal counsel and not based on any representations made by

Received On: February 15, 2013
IURC 30-DAY Filing No.: 3115
Indiana Utility Regulatory Commission

Company, that Producer will remedy any interruption or damage caused by Producer to Customer's operations, equipment, or the Location by the Facility.

5. IURC JURISDICTION

Company is subject to the jurisdiction of the IURC. Company shall seek approval of this Agreement via the IURC's 30-day administrative filing process to recognize the costs of power purchased pursuant to this Agreement for retail ratemaking purposes pursuant to Ind. Code § 8-1-8.8-1 *et seq.* within 35 Business Days of the execution of this Agreement by all Parties. This Agreement will be void if the IURC does not approve the recovery of costs imposed by the Agreement on Company through retail rates.

6. WHOLESALE POWER SALES

Producer represents that it will seek the necessary authority to make wholesale sales of power to Company pursuant to the Federal Power Act or other applicable law prior to the Commercial Operation Date.

7. TERM AND TERMINATION

7.1 Effective Term. This Agreement shall become effective after execution by all Parties and any approval by the IURC necessary to recover for retail ratemaking purposes the costs of purchasing power and shall continue in effect until terminated in accordance with the provisions of this Agreement. The term of this Agreement shall be 15 years commencing with the date energy is first produced and transmitted to the Company.

8. PRICE AND PAYMENT

8.1 Purchase and Payment. Company agrees to purchase from Producer and Producer agrees to sell to Company one hundred percent (100%) of the energy, capacity and Environmental Attributes produced by the Facility during the Term of this Agreement except in the event of a Force Majeure, System Emergency, or due to the conditions specified in the Interconnection Agreement. Company will read Producer's electric meter to determine the quantity of energy produced by the Facility each month. Company will remit payment and an invoice for energy purchased to Producer within 10 Business Days of reading the meter. Any amounts not paid by the due date will be deemed delinquent and will accrue interest at the Stated Rate, such interest to be calculated from and including the due date to but excluding the date the delinquent amount is paid in full.

8.2 Title and Risk of Loss. Title and risk of loss to the electricity shall pass from Producer to Company at the Point of Delivery. Producer warrants that it will deliver to Company the energy and Environmental Attributes free and clear of all liens, security interests, claims and encumbrances or any interest therein or thereto by any person arising prior to the Delivery Point.

8.3 Rates for Purchase. The rate Company will pay Producer for energy and capacity supplied by the Facility shall be $0.20 per kilowatt hour during the Term of this Agreement. In consideration of the compensation, which is in excess of the avoided costs of traditional

Received On: February 15, 2013
IURC 30-DAY Filing No.: 3115
Indiana Utility Regulatory Commission

generation alternatives, Company will retain all Environmental Attributes associated with the production of renewable energy by the Facility. Company shall have no responsibility for remitting any payments to Customer.

8.4 Energy Purchased from Company. Energy required by Producer to operate the Facility may be purchased from Company pursuant to its then effective Tariff and shall not be addressed by this Agreement.

8.5 Disputed Payments. If a *bona fide* dispute arises with respect to any invoice or Company payment, Company shall not be deemed in default under the Agreement and the Parties shall not suspend the performance of their respective obligations hereunder, including payment of undisputed amounts owed hereunder. A Party may, in good faith, dispute the correctness of any invoice or any adjustment to an invoice, rendered under this Agreement or adjust any invoice for an arithmetic or computational error within twelve (12) months of the date of the invoice, or adjustment to an invoice, was rendered. In the event an invoice or portion thereof, or any other claim or adjustment arising hereunder, Company shall pay the undisputed portion of the invoice. Upon resolution of the dispute, any required payment shall be made within two business days of such resolution. Inadvertent overpayment shall be returned upon request or deducted by the Company from subsequent payments. Any dispute with respect to an invoice is waived unless the other Party is notified in writing within twelve months after the invoice is rendered or any specific adjustment to the invoice is made. If an amount disputed by Company is subsequently deemed to have been due pursuant to the applicable invoice, interest shall accrue at the Stated Rate on such amount from the date becoming past due under such invoice until the date paid.

8.6 Netting. Company and Producer hereby agree that they may discharge mutual debts and payment obligations due and owing to each other on the same date pursuant to any other agreement between them through netting, in which case all amounts owed by each Party to the other Party for the purchase and sale of energy during the monthly billing period including interest, and payments or credits, shall be netted so that only the excess amount remaining due shall be paid by the Party who owes it.

8.7 Governmental Charges. Producer shall pay or cause to be paid all taxes imposed by any Governmental Authority ("Governmental Charges") on or with respect to the energy arising prior to the Delivery Point. Company shall pay or cause to be paid all Governmental Charges with respect to the energy at and from the Delivery Point (other than ad valorem, franchise or income taxes which are related to the sale of energy and are, therefore, the responsibility of Producer).

8.8 Metering Devices. Company shall arrange to test the meter at least once per calendar year. Producer at its own expense, may require that Company initiate testing and inspection of the meter. Company shall permit a representative of Producer to witness and verify such inspections and tests. Company shall provide Producer with copies of any periodic or special inspection or testing reports relating to the meter. Company shall notify Producer within forty-eight (48) hours of Company receiving actual notice of any inaccuracy or defect in a meter. Company shall cause the meter to be adjusted, replaced, and/or recalibrated as near as practicable to a condition of zero (0) error at the expense of Company. Producer shall maintain, at its own

Received On: February 15, 2013
IURC 30-DAY Filing No.: 3115
Indiana Utility Regulatory Commission

expense, a back-up metering device which shall be inspected and tested at least annually at Producer's expense. Upon request by Company, Producer shall perform additional inspections or tests of its back-up meter and shall permit a qualified representative of the requesting Party to inspect or witness the testing of such back-up meter. The actual expense of any requested additional inspection or testing of the back-up meter shall be borne by Company. If either meter fails to register or is found upon testing to be inaccurate by more than a quarter of one percent (0.25%) the meter shall be readjusted. If such an inaccuracy is found with respect to the meter for which the reading was used for billing purposes, an adjustment shall be made correcting all measurements by the inaccurate or defective metering device, for both the amount of the inaccuracy and the period of the inaccuracy, in the following manner:

(a) In the event that the meter is found to be defective or inaccurate and an adjustment factor for the meter cannot be reliably calculated, the Parties shall use the measurements from Producer's back-up meter.

(b) If the back-up meter is not functioning or found to be inaccurate pursuant to the terms of this Section, the Parties shall use production data from Company's or Producer's computer monitoring system for the period of the inaccuracy and adjust that amount for historic line losses.

(c) In the event that Producer's computer monitoring system is found to be materially inaccurate or is unavailable, the Parties shall look at relevant solar photovoltaic data and estimate what production would have been for the period for which inaccurate measurements were made.

(d) In the event that the Parties cannot agree on the actual period during which the inaccurate measurements were made, the period during which the measurements are to be adjusted shall be the shorter of: (i) the last one-half (1/2) of the period from the last previous test of the meter to the test that found the meter to be defective or inaccurate; or (ii) the one hundred eighty (180) day period immediately preceding the test that found the meter to be defective or inaccurate.

(e) To the extent that the adjustment period overlaps with a period of deliveries for which payment has already been made to Producer by Company, Company shall use the corrected measurements as determined in accordance with this Section to recalculate the amount due for the period of the inaccuracy and shall subtract the previous payments by Company for such period from such recalculated amount. If the difference is a positive number, the difference shall be paid by Company to Producer; if the difference is a negative number, that difference shall be paid by Producer to Company, or at Company's discretion such difference may take the form of an offset to payments due Producer by Company. Payment of such difference by the owing Party shall be made not later than thirty (30) days after the owing Party receives notice of the amount due, unless Company elects payment via an offset.

Received On: February 15, 2013
IURC 30-DAY Filing No.: 3115
Indiana Utility Regulatory Commission

9. REPRESENTATIONS & WARRANTIES

9.1 Representations and Warranties Relating to Agreement Validity. In addition to any other representations and warranties contained in the Agreement, each Party represents and warrants to the other as of the Effective Date that:

(a) it is duly organized and validly existing and in good standing in the jurisdiction of its organization;

(b) it has the full right and authority to enter into, execute, deliver, and perform its obligations under the Agreement;

(c) it has taken all requisite corporate or other action to approve the execution, delivery, and performance of the Agreement;

(d) the Agreement constitutes its legal, valid and binding obligation enforceable against such Party in accordance with its terms, except as may be limited by applicable bankruptcy, insolvency, reorganization, moratorium, and other similar laws now or hereafter in effect relating to creditors' rights generally;

(e) there is no litigation, action, proceeding or investigation pending or, to the best of its knowledge, threatened before any court or other Governmental Authority by, against, affecting or involving any of its business or assets that could reasonably be expected to adversely affect its ability to carry out the transactions contemplated herein;

(f) its execution and performance of the Agreement and the transactions contemplated hereby do not constitute a breach of any term or provision of, or a default under, (i) any contract or agreement to which it is a party or by which its property is bound, (ii) its organizational documents, or (iii) any Applicable Laws;

(g) it is an entity with the legal capacity to sue and to be sued and does not have immunity under any Applicable Law from any legal action, suit or proceeding brought in connection with the performance or enforcement of its obligations under the Agreement, or collection of damages for any breach thereof; and

(h) it has all the rights required to enter into the Agreement and perform its obligations hereunder without the consent of any third party, except for such third party consents that have already been obtained and that are in full force and effect, except to the extent approval of the IURC is required for the Company to take actions under this Agreement.

Received On: February 15, 2013
IURC 30-DAY Filing No.: 3115
Indiana Utility Regulatory Commission

10. FORCE MAJEURE

If any Party is rendered wholly or partly unable to perform its obligations under this Agreement because of Force Majeure, such Party shall be excused from whatever obligations under this Agreement are affected by the Force Majeure (other than the obligation to pay money) and shall not be liable or responsible for any delay in the performance of, or the inability to perform, any such obligations for so long as the Force Majeure continues. The Party suffering an occurrence of Force Majeure shall, as soon as is reasonably possible after such occurrence, give the other Parties notice describing the particulars of the occurrence and shall use commercially reasonable efforts to remedy its inability to perform; provided, however, that the settlement of any strike, walkout, lockout or other labor dispute shall be entirely within the discretion of the Party involved in such labor dispute.

11. TERMINATION AND EVENTS OF DEFAULT

11.1 Termination Resulting From Government Action. Company may terminate this Agreement if a non-appealable final act by a Governmental Authority with jurisdiction over Company renders the costs of power purchased hereunder unrecoverable from Company's retail customers; provided that during any appeal of such Governmental Authority action, Company will not be required to incur any costs for the purchase of power from Producer that are unrecoverable through retail rates; and further provided that Company shall not support before a Governmental Authority, directly or indirectly, any cancellation of this Agreement or a change in any law or rule or any other mechanism designed to disallow the recovery of any costs associated with the Company's purchase of electricity, capacity or Environmental Attributes under this Agreement through its retail rates. Unless otherwise specified by Company by written notice to the other Parties, termination of this Agreement pursuant to this Section 11.1 shall be effective immediately upon the date the costs become unrecoverable from Company's retail customers and shall occur automatically. Company will provide Producer written notice within five (5) Business Days of the effective date of the governmental action. In the event of such termination, Company shall have no further obligations to Producer and neither Producer nor Customer shall have any claim for damages against Company for Losses. Company agrees to make available to Producer non-confidential information reasonably required by Producer in the event it chooses to defend the rate recovery of all costs associated with the purchase of electricity, capacity or Environmental Attributes under this Agreement; provided that Producer shall not make statements or imply in such defense that the Company is more than neutral as to its outcome.

11.2 Termination of Interconnection Agreement. This Agreement shall automatically terminate if the Interconnection Agreement terminates and such termination is not a result of a default by either the Producer, Customer or Company. In the event of such a termination, neither the Producer, Customer nor Company shall be entitled to recover Losses from the other pursuant to this Agreement.

Received On: February 15, 2013
IURC 30-DAY Filing No.: 3115
Indiana Utility Regulatory Commission

11.3 Producer Defaults and Company Remedies.

(a) Producer Defaults. The following events shall be defaults with respect to Producer (each, a "Producer Default"):

(i) A Bankruptcy Event shall have occurred with respect to Producer;

(ii) Producer's default of the Interconnection Agreement resulting in termination of the Interconnection Agreement;

(iii) Producer fails to pay Company any undisputed amount owed under the Agreement within thirty (30) days after receipt of notice from Company of such past due amount;

(iv) If the representations and warranties and other statements made by Producer hereunder misrepresent a material fact as of the Effective Date, and such misrepresentation has a material adverse effect and such effect is not cured within thirty (30) days from the earlier of (a) notice from the Company and (b) the discovery or determination by Producer of the misrepresentation; provided, that if Producer commences an action to cure such misrepresentation within such thirty (30) day period, and thereafter proceeds with all due diligence to cure such failure, the cure period shall extend for an additional thirty (30) days; and

(v) Any of the following shall constitute an Event of Default upon occurrence but shall be subject to cure within ninety (90) days after the date of written notice from Company to Producer, provided that if such failure is not capable of being cured within the ninety (90) day period, then the cure period will be extended for an additional reasonable period of time, not to exceed one hundred twenty (120) days so long as Producer is exercising reasonable diligence to cure such failure:

(1) The Environmental Attributes generated by the Facility cannot be certified as renewable for Company's use;

(2) Producer's failure to comply with any material obligation under this Agreement which would result in a material adverse impact on Company;

(3) The sale by Producer to a third party, or diversion by Producer for any use, of energy committed to Company by Producer;

(4) Producer fails to generate energy from the Facility in parallel with Company's electric system within twelve (12)

Received On: February 15, 2013
IURC 30-DAY Filing No.: 3115
Indiana Utility Regulatory Commission

months after completion of the interconnection provided for by this Agreement;

(5) The Facility is removed from the Location; or

(6) There is no production for a 12 month period.

(b) Financing Party's Right to Cure Default of Producer. Producer shall provide Company with a notice identifying any Financing Party and providing appropriate contact information for the Financing Party. Following receipt of such notice, Company shall provide notice of any Producer Default to the Financing Party concurrently with the provision of such notice to Producer. The Financing Parties shall have the right, but not the obligation, to pay all sums due under the Agreement and to perform any other act, duty or obligation required of Producer thereunder or cause to be cured any default of Producer thereunder in the time and manner provided by the terms of the Agreement if the Financing Parties send a written notice to Company prior to the end of any cure period indicating the Financing Parties' intention to cure. Nothing herein requires a Financing Party to cure any default of Producer under the Agreement or (unless and until such Financing Party has succeeded to Producer's interests under this Agreement) to perform any act, duty or obligation of Producer under the Agreement, but Company hereby gives the Financing Parties the option to do so.

(c) Company's Remedies. If a Producer Default described in Section 11.3(a) has occurred and is continuing, in addition to all rights and remedies expressly provided herein, and subject to Section 12, Company may terminate the Agreement; provided that no such termination or exercise of remedies may occur unless and until written notice of Producer Default has been delivered by Company, to each Financing Party, and such Producer Default has not been cured within thirty (30) days of delivery of such notice or a Financing Party has failed to commence and pursue a cure within such thirty (30) day period if a longer cure period is needed. Upon a Producer default, the Producer shall pay to the Company as liquidated damages the net present value (calculated using a discount rate of seven percent) of the difference, if positive, between (i) the amount that Company pays to a third party if it chooses to secure a replacement power purchase agreement for renewable energy using Commercially Reasonable Efforts for the energy that would have been delivered by Producer hereunder during the remainder of the Term (absent termination of this Agreement and based on an assumption as to the amount of energy calculated using Commercially Reasonable projections based on historical performance of the Facility), and (ii) the amount that Company would have been required to pay to Producer pursuant to this Agreement for such energy provided that in the event Company is unable to purchase replacement electric energy that includes Environmental Attributes, then

Received On: February 15, 2013
IURC 30-DAY Filing No.: 3115
Indiana Utility Regulatory Commission

the net amount described in clause (i) shall also include the then-current amount of the Environmental Attributes (on a per MWh basis) for each MWh of such energy that Company was unable to purchase. Such damages constitute liquidated damages, and not penalties, in lieu of Company's actual damages resulting from the early termination of the Agreement. Producer further acknowledges that Company's actual damages may be impractical and difficult to accurately ascertain, and in accordance with Producer's rights and obligations under the Agreement, the specified damages constitutes fair and reasonable damages to be borne by Producer in lieu of Company's actual damages.

11.4 Company Defaults and Producer's and Customer's Remedies.

(a) Company Default. The following events shall be defaults with respect to Company (each, a "Company Default"):

(i) A Bankruptcy Event shall have occurred with respect to Company;

(ii) Company's default of the Interconnection Agreement resulting in termination of the Interconnection Agreement;

(iii) Company fails to pay Producer any undisputed amount owed under the Agreement within thirty (30) days after receipt of notice from Producer of such past due amount which failure is not remedied by Company within ten (10) days after the date of written notice from Producer to Company of such failure;

(iv) Company breaches any material term of the Agreement if (A) such breach can be cured within thirty (30) days after Producer's notice of such breach and Company fails to so cure, or (B) Company fails to commence and pursue said cure within such thirty (30) day period if a longer cure period is needed

(v) If the representations and warranties and other statements made by Company hereunder misrepresent a material fact as of the Effective Date, and such misrepresentation has a material adverse effect and such effect is not cured within thirty (30) days from the earlier of (a) notice from the Producer and (b) the discovery or determination by Company of the misrepresentation; provided, that if Company commences an action to cure such misrepresentation within such thirty (30) day period, and thereafter proceeds with all due diligence to cure such failure, the cure period shall extend for an additional thirty (30) days; and

(vi) Company supports before a Governmental Authority, directly or indirectly, any cancellation of this Agreement or a change in any law or rule or any other mechanism solely designed to disallow the recovery of any costs associated with the Company's purchase of

Received On: February 15, 2013
IURC 30-DAY Filing No.: 3115
Indiana Utility Regulatory Commission

electricity, capacity or Environmental Attributes under this Agreement through its retail rates.

(b) Producer's and Customer's Remedies. If a Company Default described in Section 11.4(a) has occurred and is continuing, and subject to Section 12, Producer and Customer may terminate the Agreement and upon such termination, Producer and Customer shall be entitled, together, to receive from Company the net present value (calculated using a discount rate of seven percent) of the difference, if positive, between: (i) the rate for purchase in Section 8.3 multiplied by the amount of energy that would have been delivered by Producer hereunder during the remainder of the Term (absent termination of this Agreement and based on an assumption as to the amount of energy calculated using Commercially Reasonable projections based on historical performance of the Facility), less (ii) the net amount, if any, payable to Producer by a third party pursuant to any replacement power purchase agreement that Producer using Commercially Reasonable Efforts enters into for the sale of the energy and less (iii) the net salvage value of any portion of the Facility that Producer transfers or reasonably could transfer if Producer cannot sell its energy to a third party and (iv) if Producer does not enter into a replacement power purchase agreement for the sale of energy from the Facility, less the net present value (calculated using a discount rate of seven percent) of avoided operation and maintenance expenses, agreed to be $0.01 per kWh, multiplied by the amount of energy that would have been delivered by Producer hereunder during the remainder of the Term (absent termination of this Agreement and based on an assumption as to the amount of energy calculated using Commercially Reasonable projections based on historical performance of the Facility). Customer and Producer shall decide how to divide the damages paid by Company among them. Such damages constitute liquidated damages, and not penalties, in lieu of Producer's and Customer's actual damages resulting from the early termination of the Agreement. Company further acknowledges that Producer's and Customer's actual damages may be impractical and difficult to accurately ascertain, and in accordance with Company's rights and obligations under the Agreement, the specified damages constitutes fair and reasonable damages to be borne by Company in lieu of Producer's and Customer's actual damages.

11.5 Duty to Mitigate. Each Party agrees that it has a duty to mitigate damages and covenants that it will use Commercially Reasonable Efforts to minimize any damages it may incur as a result of the other Party's performance or non-performance of the Agreement.

12. LIMITATIONS OF LIABILITY

The Parties confirm that the express remedies and measures of damages provided in this Agreement satisfy the essential purposes hereof. If no remedy or measure of damages is expressly herein provided, the obligor's liability shall be limited to direct, actual damages only.

Received On: February 15, 2013
IURC 30-DAY Filing No.: 3115
Indiana Utility Regulatory Commission

NO PARTY SHALL BE LIABLE TO THE OTHER FOR CONSEQUENTIAL, INCIDENTAL, PUNITIVE, EXEMPLARY OR INDIRECT DAMAGES, LOST PROFITS, RECAPTURE OF INVESTMENT TAX CREDITS, RECAPTURE OF TREASURY GRANTS IN LIEU OF INVESTMENT TAX CREDITS, RECAPTURE OF NEW MARKETS TAX CREDITS, RECAPTURE OF OTHER FEDERAL OR STATE TAX OR FINANCIAL INCENTIVES OR OTHER BUSINESS INTERRUPTION DAMAGES BY STATUTE, IN TORT OR CONTRACT (EXCEPT TO THE EXTENT EXPRESSLY PROVIDED HEREIN); PROVIDED, THAT IF ANY PARTY IS HELD LIABLE TO A THIRD PARTY FOR SUCH DAMAGES AND THE PARTY HELD LIABLE FOR SUCH DAMAGES IS ENTITLED TO INDEMNIFICATION THEREFORE FROM ANOTHER PARTY HERETO, THE INDEMNIFYING PARTY SHALL BE LIABLE FOR, AND OBLIGATED TO REIMBURSE THE INDEMNIFIED PARTY FOR, SUCH DAMAGES. Any amounts which are expressly provided herein to be payable shall be treated as direct damages and shall not fall within the exclusion in the preceding sentence. To the extent any damages required to be paid hereunder are liquidated, the Parties acknowledge that the damages are difficult or impossible to determine, that otherwise obtaining an adequate remedy is inconvenient, and that the liquidated damages constitute a reasonable approximation of the harm or loss.

13. ASSIGNMENT

13.1 Assignment by Producer. Producer shall not sell, transfer or assign (collectively, an "Assignment") the Facility or Producer's rights or obligations under the Agreement or any interest therein, without the prior written consent of Company and Customer, which shall not be unreasonably withheld, conditioned or delayed; provided, however, that, without the prior consent of Company and Customer, Producer may (i) assign the Agreement to an Affiliate of Producer so long as Producer remains fully liable for all obligations under this Agreement in the event of any nonperformance on the part of such assignee and *further provided*, that Producer provides assurances and executes documents required by Company and Customer regarding Producer's continued liability for all of Producer's obligations under this Agreement in the event of any nonperformance on the part of such assignee; and (ii) assign the Agreement to one or more Financing Parties as collateral security in connection with any financing of the Facility (including, without limitation, pursuant to a sale-leaseback or partnership flip transaction). Any assignment by Producer without any required prior written consent of Company and Customer shall not release Producer of its obligations hereunder. Producer shall notify Company and Customer, of any such assignment no later than thirty (30) days after the assignment.

13.2 Acknowledgment of Collateral Assignment. Company acknowledges that Producer will be financing the installation of the Facility through one or more Financing Parties and that Producer may sell or assign the Facility or may secure Producer's obligations by, among other collateral, a pledge or collateral assignment of the Agreement and a first security interest in the Facility; provided, however, any security interest or mortgage shall not extend or apply to or include the land upon which the Facility is constructed. To facilitate Producer's obtaining of financing for installation of the Facility, in the event that Producer identifies a Financing Party in a subsequent notice to Company, then Company hereby:

Received On: February 15, 2013
IURC 30-DAY Filing No.: 3115
Indiana Utility Regulatory Commission

(a) Agrees to negotiate in good faith to enter into a Consent and Agreement with such Financing Party in substantially the form attached hereto as Exhibit B; and

(b) Agrees to make commercially reasonable efforts to provide such other consents to assignments, certifications, representations, information or other documents as may be requested by Producer or the Financing Party in connection with the financing of the Facility; provided, that in responding to any such request, Company shall have no obligation to provide any consent, or enter into any agreement, that materially adversely affects any of Company's rights, benefits, risks or obligations under this Agreement.

Producer shall reimburse, or shall cause the Financing Party to reimburse, Company for the expenses (including the reasonable fees and expenses of counsel) incurred by Company directly in the preparation, negotiation, execution or delivery of any documents requested by Producer or the Financing Party, and provided by Company, pursuant to this Section 13.2.

In no event shall any debt secured by Producer in connection with the Facility provide recourse against Company, Customer (or any of their respective assets) or any of their respective assets or Affiliates or in any way imply that Company, Customer or any of their respective Affiliates are responsible for or acts as a primary obligor, surety, or guarantor of such debt.

13.3 Assignment by Company. Company shall not assign the Agreement or any interest therein, without Producer's and Customer's prior written consent, which consent shall not be unreasonably withheld, conditioned or delayed; provided, however, that, without the prior consent of Producer and Customer, Company may assign the Agreement to an Affiliate of Company so long as Company remains fully liable for all obligations under this Agreement in the event of any nonperformance on the part of such assignee and further provided, that Company provides assurances and executes documents required by Producer and Customer regarding Company's continued liability for all of Company's obligations under this Agreement in the event of any nonperformance on the part of such assignee. Any assignment by Company without the prior written consent of Producer and Customer shall not release Company of its obligations hereunder.

13.4 Assignment by Customer. Customer shall not assign the Agreement or any interest therein without Producer's and Company's prior written consent, which consent shall not be unreasonably withheld, conditioned or delayed; provided, however, that without the prior consent of Producer or Company, Customer may assign the Agreement to an Affiliate of Customer so long as Customer remains fully liable for all obligations under this Agreement in the event of any nonperformance on the part of such assignee and further provided, that Customer provides assurances and executes documents required by Producer and Company regarding Customer's continued liability for all of Customer's obligations under this Agreement in the event of any nonperformance on the part of such assignee. Any assignment by Customer without the prior written consent of Producer and Company shall not release Customer of its obligations hereunder.

Received On: February 15, 2013
IURC 30-DAY Filing No.: 3115
Indiana Utility Regulatory Commission

14. NOTICES

14.1 Except as otherwise provided in this Agreement, any notice, request, consent, demand, or statement which is contemplated to be made upon either Party hereto by the other Party hereto under any of the provisions of this Agreement, shall be in writing and sent by certified mail with a return receipt requested or via overnight courier with tracking capability to the address set forth below:

If notice or other transmittal (other than payment of invoices) is to **Company**:

Indianapolis Power & Light Company
One Monument Circle
Indianapolis, IN 46204
Attention: Director, Regulatory Affairs

With a copy to:

Indianapolis Power & Light Company
One Monument Circle
Indianapolis, IN 46204
Attention: Office of the General Counsel

If notice or other transmittal is to **Producer**:

Inovateus Solar, LLC
19890 State Line Road
South Bend, Indiana 46637

Attention: President

With a copy to:

_____
_____
_____
Attention: _____

If notice or other transmittal is to **Customer**:

Duke Realty Limited Partnership
600 E. 96th Street, Suite 100
Indianapolis, Indiana 46240
Attention: Charles E. Podell

Received On: February 15, 2013
IURC 30-DAY Filing No.: 3115
Indiana Utility Regulatory Commission

With a copy to:

Duke Realty Limited Partnership
600 E. 96th Street, Suite 100
Indianapolis, Indiana 46240
Attention: Michael S. Gahimer

14.2 Notice to Financing Parties. Company shall deliver to the Financing Parties, concurrently with delivery to Producer, a copy of each notice of default, if any, given by Company under the Agreement, inclusive of a reasonable description of Producer Default, if any. In the event that Producer identifies a Financing Party in a subsequent notice to Company, no such notice will be effective absent delivery to the Financing Party. In the absence of a Producer Default, Company will not mutually agree with Producer to terminate the Agreement without the written consent of the Financing Parties.

Within ten (10) days following Producer's receipt of each written notice from the Financing Parties of any default, or the Financing Parties' intent to exercise any remedies, under the financing arrangements between Producer and the Financing Parties, Producer shall deliver a copy of such notice to Company.

15. CONFIDENTIALITY

15.1 Confidentiality Obligation. If any Party provides confidential information, including business plans, strategies, financial information, proprietary, patented, licensed, copyrighted or trademarked information, and/or technical information regarding the financing, design, operation and maintenance of the Facility or of Company's business ("Confidential Information") to the others or, if in the course of performing under the Agreement or negotiating the Agreement a Party learns Confidential Information regarding the facilities or plans of the others, the receiving Party shall (a) protect the Confidential Information from disclosure to third parties with the same degree of care accorded its own confidential and proprietary information, and (b) refrain from using such Confidential Information, except in the negotiation and performance of the Agreement. A Party may provide such Confidential Information to individuals on a need to know basis (provided and on condition that such potential assignees be bound by a written agreement restricting use and disclosure of Confidential Information) (collectively, "Permitted Recipients). Each such recipient of Confidential Information shall be informed by the Party disclosing Confidential Information of its confidential nature and shall be directed to treat such information confidentially and shall agree to abide by these provisions. In any event, each Party shall be liable (with respect to the other Party) for any breach of this provision by any entity to whom that Party improperly discloses Confidential Information. The terms of the Agreement (but not its execution or existence) shall be considered Confidential Information for purposes of this Section 15.1, except as set forth in Section 15.2. All Confidential Information shall remain the property of the disclosing Party and shall be returned to the disclosing Party or destroyed after the receiving Party's need for it has expired or upon the request of the disclosing Party.

15.2 Permitted Disclosures. Notwithstanding any other provision herein, neither Party shall be required to hold confidential any information that:

Received On: February 15, 2013
IURC 30-DAY Filing No.: 3115
Indiana Utility Regulatory Commission

(a) becomes publicly available other than through the receiving Party;

(b) is required to be disclosed by a Governmental Authority, under Applicable Law or pursuant to a validly issued subpoena or required filing, or is disclosed to a Governmental Authority pursuant to an order protecting such information from public disclosure and after a receiving Party promptly notifies the disclosing Party of such disclosure;

(c) is disclosed to a party in a proceeding before a Governmental Authority not a competitor of another Party pursuant to a non-disclosure agreement prohibiting dissemination beyond such party and limiting its use to such proceeding;

(d) is independently developed by the receiving Party; or

(e) becomes available to the receiving Party without restriction from a third party under no obligation of confidentiality.

15.3 Goodwill and Publicity. No Party shall use the name, trade name, service mark, or trademark of another Party in any promotional or advertising material without the prior written consent of such other Party. The Parties shall coordinate and cooperate with each other when making public announcements related to the execution and existence of the Agreement, and each Party shall have the right to promptly review, comment upon, and approve any publicity materials, press releases, or other public statements by the other Parties that refer to, or that describe any aspect of, the Agreement; provided that no such publicity releases or other public statements (except for filings or other statements or releases as may be required by Applicable Law) shall be made by any Party without the prior written consent of the other Party. At no time will any Party acquire any rights whatsoever to any trademark, trade name, service mark, logo or other intellectual property right belonging to the other Parties.

15.4 Enforcement of Confidentiality Obligation. Each Party agrees that the disclosing Party would be irreparably injured by a breach of this Section 15 by the receiving Party or its Permitted Recipients or other Person to whom the receiving Party discloses Confidential Information of the disclosing Party and that the disclosing Party may be entitled to equitable relief, including injunctive relief and specific performance, in the event of any breach of the provisions of this Section 15. To the fullest extent permitted by Applicable Law, such remedies shall not be deemed to be the exclusive remedies for a breach of this Section 15, but shall be in addition to all other rights remedies available at law or in equity.

16. INDEMNITY

16.1 Each Party (the "Indemnifying Party") shall release, indemnify and hold harmless the other Party or Parties (the "Indemnified Party") from and against all claims, liability, damages and expenses, including attorney's fees, based on any injury to any person, including the loss of life, or damage to any property, including the loss of use thereof, arising out of, resulting from, or connected with, or that may be alleged to have arisen out of, resulted from, or connected with, an act or omission by the Indemnifying Party, its employees, agents, representatives, successors or assigns in the construction, ownership, operation or maintenance

Received On: February 15, 2013
IURC 30-DAY Filing No.: 3115
Indiana Utility Regulatory Commission

of the Indemnifying Party's facilities used in connection with this Agreement. Upon written request of the Party seeking relief under this Section 16.1, the Indemnifying Party shall defend any suit asserting a claim covered by this Section 16.1. If a Party is required to bring an action to enforce its rights under this Section 16.1, either as a separate action or in connection with another action, and said rights are upheld, the Indemnifying Party shall reimburse such Party for all expenses, including attorney's fees, incurred in connection with such action.

16.2 If an Indemnified Party determines that it is entitled to defense and indemnification under this Section 16, such Indemnified Party shall promptly notify the Indemnifying Party in writing of the Losses, and provide all reasonably necessary or useful information, and authority to settle and/or defend the Losses. Defense shall be provided by legal counsel of the Indemnified Party's choosing. No settlement that would impose costs or expense upon the Indemnified Party shall be made without such party's prior written consent.

17. MISCELLANEOUS

17.1 Integration; Exhibits. The Agreement, together with the Exhibits attached thereto and hereto, constitute the entire agreement and understanding between the Parties with respect to the subject matter thereof and supersedes all prior agreements relating to the subject matter hereof, which are of no further force or effect. The Exhibits attached thereto and hereto are integral parts hereof and are made a part of the Agreement by reference.

17.2 Amendments. The Agreement may only be amended, modified or supplemented by an instrument in writing executed by duly authorized representatives of each Party.

17.3 Cumulative Remedies. Except as set forth to the contrary herein, any right or remedy of the Parties shall be cumulative and without prejudice to any other right or remedy, whether contained herein or not.

17.4 Disputes. In the event of a dispute between the Parties arising out of or relating to this Agreement, such dispute shall be submitted within twenty (20) days of written notice, to a management panel composed of representatives of the respective Parties for informal dispute resolution or settlement prior to the institution of any other dispute resolution process. Should the informal dispute resolution process described herein be unsuccessful, the Parties agree that no written or oral representations made during the course of the attempted dispute resolution shall constitute a Party admission or waiver and that each Party may pursue any other legal or equitable remedy it may have available to it. The Parties agree that the existence of any dispute or the institution of any dispute resolution process (either formal or informal) shall not delay the performance of each Party's undisputed responsibilities under this Agreement.

17.5 Termination of Any Applicable Existing Agreement. From and after the date when service commences under this Agreement, this Agreement shall supersede any oral and/or written agreement or understanding between Company, Customer and Producer concerning the service covered by this Agreement and any such agreement or understanding shall be deemed to be terminated as of the date service commences under this Agreement.

17.6 Limited Effect of Waiver. The failure of a Party to enforce any of the provisions of the Agreement, or the waiver thereof, shall not be construed as a general waiver or

Received On: February 15, 2013
IURC 30-DAY Filing No.: 3115
Indiana Utility Regulatory Commission

relinquishment on its part of any such provision, in any other instance or of any other provision in any instance.

17.7 Survival. The obligations under Section 9 (Representations & Warranties) and Section 15 (Confidentiality), shall survive for a term of five (5) years after the expiration or termination of the Agreement. The obligations under Section 12 (Limitation of Liability), Section 16 (Indemnification) and Sections 17.3, 17.4, 17.5, and 17.8 shall survive after the expiration or termination of the Agreement.

17.8 Governing Law. The Agreement is made and entered into and shall be interpreted in accordance with the applicable laws of the State of Indiana.

17.9 Forward Contract. The Parties acknowledge and agree that this Agreement and the transactions contemplated by this Agreement constitute a "forward contract" within the meaning of the United States Bankruptcy Code and that Producer is a "forward contract merchant" within the meaning of the United States Bankruptcy Code.

17.10 Severability. If any term, covenant or condition in the Agreement shall, to any extent, be invalid or unenforceable in any respect under Applicable Law, the remainder of the Agreement shall not be affected thereby, and each term, covenant or condition of the Agreement shall be valid and enforceable to the fullest extent permitted by Applicable Law and, if appropriate, such invalid or unenforceable provision shall be modified or replaced to give effect to the underlying intent of the Parties and to the intended economic benefits of the Parties.

17.11 Relation of the Parties. The relationship between the Parties shall not be that of partners, agents, or joint ventures for one another, and nothing contained in the Agreement shall be deemed to constitute a partnership or agency agreement between them for any purposes, including federal income tax purposes. The Parties, in performing any of their obligations hereunder, shall be independent contractors or independent parties and shall discharge their contractual obligations at their own risk.

17.12 Disclaimer of Third Party Beneficiary Rights. In executing this Agreement, Company does not, nor should it be construed to, extend its credit or financial support for the benefit of any third parties lending money to or having other transactions with Producer or Customer. Nothing in this Agreement shall be construed to create any duty to, or standard of care with reference to, or any liability to, any person not a party to this Agreement.

17.13 Employees. Each Party shall be solely liable for the payment of all wages, taxes, and other costs related to the employment of persons to perform its obligations under this Agreement, including all federal, state and local income, social security, payroll, and employments taxes and statutorily mandated workers' compensation coverage. None of the persons employed by any Party shall be considered employees of the other Parties for any purpose, nor shall any Party represent to any person that he or she is or shall become an employee of the other Party.

17.14 Compliance with Laws. Each Party shall at all times comply with all applicable laws, except for any noncompliance which, individually or in the aggregate, could not reasonably be expected to have a material adverse effect on the business or financial condition of the Party

Received On: February 15, 2013
IURC 30-DAY Filing No.: 3115
Indiana Utility Regulatory Commission

or its ability to fulfill its commitments hereunder. As applicable, each Party shall give all required notices, shall procure and maintain all necessary governmental permits, licenses, and inspections necessary for performance of this Agreement, and shall pay its respective charges and fees in connection therewith.

17.15 Successors and Assigns. The Agreement and the rights and obligations under the Agreement shall be binding upon and shall inure to the benefit of the Parties and their respective successors and permitted assigns.

17.16 Counterparts. The Agreement may be executed in one or more counterparts, all of which taken together shall constitute one and the same instrument.

IN WITNESS WHEREOF, the Parties have executed this Agreement, effective as of the Effective Date first above written.

Indianapolis Power & Light Company ("Company")

By: William H. Henley

Printed: William H. Henley

Title: VP Corporate Affairs

Execution Date: 2/15/13

Inovateus Solar, LLC ("Producer")

By: T.J. Kanczuzewski

Printed: T.J. Kanczuzewski

Title: President

Execution Date: 2-08-2013

Duke Realty Limited Partnership ("Customer")

By: Duke Realty Corporation,
an Indiana corporation,
its sole general partner

By: Charles E. Podell

Printed: Charles E. Podell

Title: Senior Vice President

Execution Date: 2-12-13

Received On: February 15, 2013
IURC 30-DAY Filing No.: 3115
Indiana Utility Regulatory Commission

EXHIBIT A

INTERCONNECTION AGREEMENT AMONG THE PARTIES

Received On: February 15, 2013
IURC 30-DAY Filing No.: 3115
Indiana Utility Regulatory Commission

INTERCONNECTION AGREEMENT
FOR LEVEL 2 - 2MW OR LESS OR LEVEL 3 - ALL OTHER FACILITIES

THIS INTERCONNECTION AGREEMENT ("Agreement") is made and entered into this 8th day of Feb, 2013, by and between Indianapolis Power & Light Company ("Company"), **Duke Realty Limited Partnership, an Indiana Limited Partnership** ("Customer"), and **Inovateus Solar LLC** ("Producer"). Company, Customer and Producer are hereinafter sometimes referred to individually as "Party" or collectively as "Parties".

WITNESSETH:

WHEREAS, Producer, with Customer's permission, is installing, or has installed, generation equipment, controls, and protective relays and equipment ("Generation Facilities") on Customer's property used to interconnect and operate in parallel with Company's electric system, which Generation Facilities are more fully described in Exhibit A, attached hereto and incorporated herein by this Agreement, and as follows:

Location: **Building 87, 5355 W. 76th Street, Indianapolis, IN 46268**

Generator Size and Type: **3000 kW, Solar**

NOW, THEREFORE, in consideration thereof, Producer, Customer and Company agrees as follows:

1. **Application.** It is understood and agreed that this Agreement applies only to the operation of the Generation Facilities described above and on Exhibit A.

2. **Interconnection.** Company agrees to allow Producer to interconnect and operate the Generation Facilities in parallel with Company's electric system in accordance with any operating procedures or other conditions specified in Exhibit A. By this Agreement, or by inspection, if any, or by non-rejection, or by approval, or in any other way, Company does not give any warranty, express or implied, as to the adequacy, safety, compliance with applicable codes or requirements, or as to any other characteristics, of the Generation Facilities. The Generation Facilities installed shall comply with, and Producer represents and warrants their compliance with: (a) the National Electrical Code and the National Electrical Safety Code, as each may be revised from time to time; (b) Company's rules and regulations, including Company's General Terms and Conditions for Electric Service as contained in Company's Retail Electric Tariff and as each may be revised from time to time with the approval of the Indiana Utility Regulatory Commission ("Commission"); (c) the rules and regulations of the Commission, including the provisions of 170 Indiana Administrative Code 4-4.3, as such rules and regulations may be revised from time to time by the Commission; and (d) all other applicable local, state, and federal codes and laws, as the same may be in effect from time to time.

Producer shall install, operate, and maintain, at Producer's sole cost and expense, the Generation Facilities in accordance with the manufacturer's suggested practices for safe, efficient and reliable operation of the Generation Facilities in parallel with Company's electric system. Customer and Producer shall bear full responsibility for the installation, maintenance and safe operation of the Generation Facilities. Customer and Producer shall be responsible for protecting, at Customer's and Producer's sole cost and expense, the Generation Facilities from any condition or disturbance on Company's electric system, including, but not limited to, voltage sags or swells, system faults, outages, loss of a single phase of supply, equipment failures, and lightning or switching surges. In the event Customer assumes operation of the Generation Facilities, it shall be deemed the Producer for purposes of this Agreement and assume all such obligations and responsibilities.

Received On: February 15, 2013
IURC 30-DAY Filing No.: 3115
Indiana Utility Regulatory Commission

INTERCONNECTION AGREEMENT
FOR LEVEL 2 - 2MW OR LESS OR LEVEL 3 - ALL OTHER FACILITIES

Customer and Producer agree that, without the prior written permission from Company, no changes shall be made to the configuration of the Generation Facilities, as that configuration is described in Exhibit A, and no relay or other control or protection settings specified in Exhibit A shall be set, reset, adjusted or tampered with, except to the extent necessary to verify that the Generation Facilities comply with Company approved settings. Producer shall not contact Company regarding the foregoing without first notifying Customer of its desire to do so.

3. **Operation by Customer or Producer.** Neither the Producer nor Customer shall operate the Generation Facilities in such a manner as to cause undue fluctuations in voltage, intermittent load characteristics or otherwise interfere with the operation of Company's electric system. At all times when the Generation Facilities are being operated in parallel with Company's electric system, Producer shall so operate the Generation Facilities in such a manner that no disturbance will be produced thereby to the service rendered by Company to any of its other customers or to any electric system interconnected with Company's electric system. Customer and Producer understand and agree that the interconnection and operation of the Generation Facilities pursuant to this Agreement is secondary to, and shall not interfere with, Company's ability to meet its primary responsibility of furnishing reasonably adequate service to its customers.

The control equipment for the Generation Facilities shall immediately, completely, and automatically disconnect and isolate the Generation Facilities from Company's electric system in the event of a fault on Company's electric system, a fault on the Generating Facilities' electric system, or loss of a source or sources on Company's electric system. The automatic disconnecting device included in such control equipment shall not be capable of reclosing until after service is restored on Company's electric system. Producer represents and warrants to Company and Customer that the control equipment complies with the foregoing requirements and will continue to comply with such requirements during any term of this Agreement. Additionally, if the fault is on the Generating Facilities' electric system, such automatic disconnecting device shall not be reclosed until after the fault is isolated from the Generating Facilities' electric system. Upon Company's request, Customer or Producer shall promptly notify Company whenever such automatic disconnecting devices operate; and, if Producer so notifies Company, it shall simultaneously provide notice to Customer. Provided, however, that Customer shall only have an obligation to notify Company if Customer has knowledge that the automatic disconnecting device has operated.

Customer and Producer shall coordinate the location of any disconnect switch required by Company to be installed and maintained by Customer or Producer.

4. **Access by Company.** Upon reasonable advance oral notice to Customer and Producer, Company shall have access at reasonable times to the Generation Facilities whether before, during or after the time the Generation Facilities first produce energy, to perform reasonable on-site inspections to verify that the installation and operation of the Generation Facilities comply with the requirements of this Agreement and to verify the proper installation and continuing safe operation of the Generation Facilities. Company shall also have at all times immediate access to breakers or any other equipment that will isolate the Generation Facilities from Company's electric system. The cost of such inspection(s) shall be at Company's expense; however, Company shall not be responsible for any other cost Customer or Producer may incur as a result of such inspection(s). Company shall have the right and authority to isolate the Generation Facilities at Company's sole discretion if Company believes that: (a) continued interconnection and parallel operation of the Generation Facilities with Company's electric system creates or contributes (or will create or contribute) to a system emergency on either Company's or Customer's electric system; (b) the Generation Facilities are not in compliance with the requirements of this Agreement, and the non-compliance adversely affects the safety, reliability or

Received On: February 15, 2013
IURC 30-DAY Filing No.: 3115
Indiana Utility Regulatory Commission

power quality of Company's electric system; or (c) the Generation Facilities interfere with the operation of Company's electric system. In non-emergency situations, Company shall give Customer and Producer reasonable notice prior to isolating the Generating Facilities. Any electronic data produced by equipment within the Generation Facilities (the "Electronic Data") shall be maintained by Customer and Producer for a period of five years. Electronic Data shall be provided to Company through either (a) real-time data transfer with Company communication equipment or (b) in electronic format within ten (10) business days of Company's request. To the extent practical without the additional of additional costs, Customer and Producer shall provide Electronic Data to Company in a protocol compatible with Company's existing software systems.

5. **Rates and Other Charges.** This Agreement does not constitute an agreement by Company to purchase or wheel power produced by the Generation Facilities, or to furnish any backup, supplemental or other power or services associated with the Generation Facilities, and this Agreement does not address any charges for excess facilities that may be installed by company in connection with interconnection of the Generation Facilities. It is understood that if Customer or Producer desires an agreement whereby Company wheels power, or purchases energy and/or capacity, produced by the Generation Facilities, or furnishes any backup, supplemental or other power or services associated with the Generation Facilities, then Company may enter into another mutually acceptable separate agreement with Customer or Producer detailing the charges, terms and conditions of such purchase or wheeling, or such backup, supplemental or other power or services. It is also understood that if any such excess facilities are necessary and required, including any additional metering equipment, as determined by Company, in order for the Generation Facilities to interconnect with and operate in parallel with Company's electric system, then Producer (or Customer in the event it obtains ownership of the Generation Facilities or the right to operate same) shall enter into an Excess Facilities Agreement with Company in accordance with Company's Standard Contract Rider No. 4 contained in Company's Retail Electric Tariff or its successor, which rider details the charges and terms of such excess facilities, as the same may be revised from time to time with the approval of the Commission.

6. **Insurance.** Either Customer or Producer shall procure and keep in force during all periods of parallel operation of the Generation Facilities with Company's electric system, the following insurance to protect the interests of Company under this Agreement, with insurance carriers acceptable to Company, and in amounts not less than the following:

Coverage	Limits
Comprehensive General Liability	$5,000,000.00
Contractual Liability	$5,000,000.00
Bodily Injury	$5,000,000.00
Property Damage	$5,000,000.00

Producer or Customer, as applicable, shall deliver a CERTIFICATE OF INSURANCE verifying the required coverage to:

Attention: Mr. Bruce Smith
Address: One Monument Circle Indianapolis IN, 46204

At least fifteen (15) days prior to any interconnection of the Generation Facilities with Company's electric system, and thereafter as requested by Company.

Received On: February 15, 2013
IURC 30-DAY Filing No.: 3115
Indiana Utility Regulatory Commission

If the party providing the foregoing insurance is sufficiently creditworthy, as determined by Company, then, in lieu of obtaining all or part of the above-specified required insurance coverage from insurance carriers acceptable to Company, Customer or Producer, as applicable, may self insure all or part of such required insurance coverage provided that Producer or Customer, as applicable, agrees to defend Company and to provide on a self insurance basis insurance benefits to Company, all to the same extent as would have been provided under this Agreement pursuant to the above insurance provisions of this Section 6. By utilizing self insurance to provide all or part of the above-specified required insurance Producer or Customer, as applicable, shall be deemed to have agreed to the provisions of the previous sentence of this Section 6.

7. **Indemnification.** Each Party (the "Indemnifying Party") shall indemnify and hold harmless the other Party from and against all claims, liability, damages and expenses, including attorney's fees, based on any injury to any person, including the loss of life, or damage to any property, including the loss of use thereof, arising out of, resulting from, or connected with, or that may be alleged to have arisen out of, resulted from, or connected with, an act or omission by the Indemnifying Party, its employees, agents, representatives, successors or assigns in the construction, ownership, operation or maintenance of the Indemnifying Party's facilities used in connection with this Agreement. Upon written request of the Party seeking relief under this Section 7, the Indemnifying Party shall defend any suit asserting a claim covered by this Section 7. If a Party is required to bring an action to enforce its rights under this Section 7, either as a separate action or in connection with another action, and said rights are upheld, the Indemnifying Party shall reimburse such Party for all reasonable expenses, including attorney's fees, incurred in connection with such action.

8. **Term.** This Agreement shall become effective when executed by all Parties and shall continue in effect for a period of twenty five (25) years (the "Initial Term"). After the Initial Term, this Agreement shall renew for one (1) year periods unless a Party serves notice on all other Parties giving notice of its intent not to renew at least sixty (60) days prior to the expiration of the then current term.

9. **Termination.**

a. Producer Defaults. The following events shall be defaults with respect to Producer:

i. Producer fails to generate energy from the Generation Facilities in parallel with Company's electric system within twelve (12) months after completion of the interconnection provided for by this Agreement;

ii. Producer fails to pay when due any amounts owing to Company or Customer under the Agreement or fails to indemnify another party;

iii. Producer fails, within sixty (60) days of notice provided by Company, to take corrective action to bring the Generation Facilities' interconnection in compliance with the terms of the Agreement; or

iv. Producer breaches any material term of the Agreement if (A) such breach can be cured within thirty (30) days after Company's or Customer's notice of such breach and Producer fails to so cure or (B) Producer fails to commence and pursue said cure within such thirty (30) day period if a longer cure period is needed; or

v. Customer ceases to be obligated under the terms of the Agreement for any other reason and

1) A person or entity subsequently contracting with Company for the provision of electric utility service using the Customer's

Received On: February 15, 2013
IURC 30-DAY Filing No.: 3115
Indiana Utility Regulatory Commission

former electric facilities refuses to assume Customer's obligations under this Agreement; or

2) Producer fails to post security within thirty (30) days of a request by Company, in a form and amount requested by IPL in its sole discretion, sufficient to protect IPL from the loss of Customer's commitments in this Agreement.

b. Company Defaults. Company's breach of any material term of the Agreement that (A) can be cured within thirty (30) days after Producer's or Customer's notice to Company of such breach but which Company fails to so cure or (B) Company fails to commence and pursue said cure within such thirty (30) day period if a longer cure period is needed shall constitute a default by Company.

c. Termination. The Agreement may terminate prior to the expiration of the Initial Term or any subsequent term at the earliest date that one of the following events occur:

i. In the event a Party defaults and fails to timely cure same, the non-defaulting party may terminate the Agreement;

ii. The Parties mutually agree in writing to terminate the Agreement; or

iii. In the event operation of the Generation Facilities becomes illegal or impracticable to any Party as the consequence of the application of any statute, law or governmental rule or regulation; or compliance with such regulation requires Company to incur costs and the Producer or Customer are unwilling to reimburse Company for such cost.

10. Termination of Any Applicable Existing Agreement. From and after the date when service commences under this Agreement, this Agreement shall supersede any prior oral and/or written agreement or understanding between Company, the Producer and Customer concerning the service covered by this Agreement and any such agreement or understanding shall be deemed to be terminated as of the date service commences under this Agreement.

11. Force Majeure. For purposes of this Agreement, the term "Force Majeure" means any cause or event not reasonably within the control of the Party claiming Force Majeure, including, but not limited to, the following: acts of God, strikes, lockouts, or other industrial disturbances; acts of public enemies; orders or permits or the absence of the necessary orders or permits of any kind which have been properly applied for from the government of the United States, the State of Indiana, any political subdivision or municipal subdivision or any of their departments (except for the Customer), agencies or officials, or any civil or military authority; unavailability of material used in connection with the construction and operation of the Generation Facilities; extraordinary delay in transportation; unforeseen soil conditions; equipment, material, supplies, labor or machinery shortages; epidemics; landslides; lightning; earthquakes; fires; hurricanes; tornadoes; storms; floods; washouts; drought; arrest; war; civil disturbances; explosions; breakage or accident to machinery, transmission lines, pipes or canals; partial or entire failure of utilities; breach of contract by any supplier, contractor, subcontractor, laborer or materialman; sabotage; injunction; blight; famine; blockade; or quarantine.

If any Party is rendered wholly or partly unable to perform its obligations under this Agreement because of Force Majeure, such Party shall be excused from whatever obligations under this Agreement are affected by the Force Majeure (other than the obligation to pay money) and shall not be liable or responsible for any delay in the performance of, or the inability to perform, any such obligations for so long as the Force Majeure continues. The Party suffering an occurrence of Force Majeure shall, as soon as is reasonably possible after such occurrence, give the other Parties notice describing the particulars of the occurrence and shall use commercially reasonable

Received On: February 15, 2013
IURC 30-DAY Filing No.: 3115
Indiana Utility Regulatory Commission

efforts to remedy its inability to perform; provided, however, that the settlement of any strike, walkout, lockout or other labor dispute shall be entirely within the discretion of the Party involved in such labor dispute.

12. Dispute Resolution. In the event that Customer, Producer and Company, or some of them, are unable to agree on matters relating to this Agreement, either Customer, Producer or Company may submit a complaint to the Commission in accordance with the Commission's applicable rules.

13. Notices. Except to the extent set forth in Section 4 or as otherwise provided in this Agreement, any notice, request, consent, demand, or statement which is contemplated to be made upon any Party hereto by any other Party hereto under any of the provisions of this Agreement, shall be in writing and sent by certified mail to all other Parties with a return receipt requested or via overnight courier with tracking capability to the address set forth below:

If notice or other transmittal (other than payment of invoices) is to Company:

Indianapolis Power & Light Company
One Monument Circle
Indianapolis, IN 46204
Attention: Director, Regulatory Affairs
Telephone: 317-261-6713

With a copy to:

Indianapolis Power & Light Company
One Monument Circle
Indianapolis, IN 46204
Attention: Office of the General Counsel
Telephone: 317-261-8337

If notice or other transmittal is to Customer: Duke Realty Limited Partnership
600 E. 96th St. Ste. 100
Indpls, IN 46240
ATTN: Michael Gahimer

Telephone: (317) 808-6010

With a copy to:

Telephone: _____

If notice or other transmittal is to Producer: Innovateus Solar LLC.
19890 Stateline Rd.
South Bend, IN 46631
ATTN: TJ Kanczuzewski

Telephone: _____

With a copy to:

Telephone: (574) 485-1400

14. Assignment. No Party shall assign, sublet or otherwise transfer its rights or obligations under this Agreement, or any portion thereof, without the prior written consent of the other

Received On: February 15, 2013
IURC 30-DAY Filing No.: 3115
Indiana Utility Regulatory Commission

INTERCONNECTION AGREEMENT
FOR LEVEL 2 - 2MW OR LESS OR LEVEL 3 - ALL OTHER FACILITIES

15. Commission Jurisdiction and Company Rules. Both Company and this Agreement are subject to the jurisdiction of the Commission. To the extent that Commission approval of this Agreement may be required now or in the future, this Agreement and Company's commitments hereunder are subject to such approval. Customer's and Producer's use of the Generation Facilities is subject to the rules and regulations of Company, including Company's General Terms and Conditions for Electric Service, as contained in Company's Retail Electric Tariff, as the same may be revised from time to time with the approval of the Commission.

IN WITNESS WHEREOF, the Parties have executed this Agreement, effective as of the date first above written.

Indianapolis Power & Light Company

By: Barry J. Bentley

Date: 2/6/2013

Name: Barry J. Bentley

Title: Sr. Vice President Customer Operations

Duke Realty Limited Partnership
an Indiana limited partnership

By: Duke Realty Corporation,
an Indiana Corporation,
its general partner

By: Charles E. Podell

Date: 2-4-2013

Name: Charles E. Podell

Title: Senior Vice President

Inovateus Solar, LLC
"Producer"

By: T.J. Kanczuzewski

Date: 2-4-2013

Name: T.J. Kanczuzewski

Title: President

Received On: February 15, 2013
IURC 30-DAY Filing No.: 3115
Indiana Utility Regulatory Commission

EXHIBIT A

Generation Facilities Description

The generation facility for Duke Realty, Building 87 located at 5355 W. 76th Street, Indianapolis, Indiana 46268, as described in exhibit 1G (Property Producer Consent Letter.pdf) consists of six Advanced Energy AE 500NX-1kV inverters rated at 420 volt 60Hz for a total inverter generation capacity of 3,000.0 kW AC. The array consists of 13,440 DC solar panels using Canadian Solar CS5P-260M solar modules.

Finalizing the interconnection agreement and qualification for Rate REP is dependent upon the Producer providing evidence of site control.

The generation facility as described in exhibit 1G (Property Producer Consent Letter.pdf) consists of six (6) 420 volt 60Hz units for a total inverter generation capacity of 3,000.0 kW AC. Each three phase inverter is connected to a 420 volt to 13200 volt step up transformer. The transformers are connected to a cable connection system. The cable collection system for the six transformers is connected to a pad mounted metering cabinet and a Fault Interrupter of unspecified size make and rating which must be approved by Company before physical interconnection. The recloser unit provided by the Producer for Company will be used for the sole protection of the Company system and will not be responsible for protection of the Producer's transformer. This recloser will also not be used for any arc flash protection requirements the Producer equipment may require. This 13.2kV switch gear is S&C PMU with shop drawing approval by Company. Company revenue metering will mount in this primary gear. Company will acquire the instrumentation transformers and deliver them to the Chicago factory. Producer shall pre-pay for the cost of the instrumentation transformers and associated delivery costs by providing to Company a deposit in the amount identified by Company. The switchgear will connect to a pad mounted G&W recloser model VIPER-ST. The recloser will connect to a visible lockable gang operated air break switch Hubbel model #D7 PS1 BL. This switch will be the point of common coupling between the utility and the Producer. Auxiliary or power used at the distributed generation site not provided by the distributed generator will be billed at an applicable rate such as rate SS and recorded by a Company meter covered under a separate agreement.

Points of Interconnection, Disconnect and Ownership

The points of interconnection disconnect and Ownership shall be the 600 ampere "GOAB" isolation switch that is lockable and a gang operated air break switch shown on drawing titled Exhibit 1B Drawing Preliminary One Line Diagram (the "Interconnection Point"). This connection shall be adjacent to Company pole number 253/225-B, Circuit Georgetown 3.

Received On: February 15, 2013
IURC 30-DAY Filing No.: 3115
Indiana Utility Regulatory Commission

Interconnection Facilities shall be provided, installed and maintained by the Producer including Revenue Metering Equipment

Basic Facilities - The Producer shall install and support a road accessible by Company line truck to the PCC disconnects switch, recloser and metering switchgear. Any gates or entrance facilities shall have provisions for double padlock operation. The road shall be accessible 24 hours a day.

High Voltage Equipment - The Producer shall install 13.2 kV recloser, SEL-651R controller, disconnect switch and metering switchgear per Company specifications. The point of common coupling (PCC) switch shall have proper voltage class arresters for system operated at nominal 13.8 kV and effectively grounded system, on both the line and load side of the switch. The Producer shall allow Company to place facility identification names and numbers on the PCC switch, recloser and pad mounted metering switchgear. These facility identification numbers shall be visible at all times. The Producer shall allow Company sole control of the recloser operation. All 13.2kV switching shall be performed under the direction of the Company service dispatcher. All 13.2kV switching shall conform to Company safety rules regardless of other designs plans or intentions.

Revenue Metering - The Producer shall supply all conduits needed for Company metering and control needs at the DG site. The Producer shall be responsible for all remote metering costs.

Interconnection Facilities Installed and Maintained by Company With Producer Reimbursing Company For Such Costs

Company shall provide and install the following revenue meters:

One set of revenue meters to monitor the inverter interconnection.

Instrumentation transformers

The Producer shall be responsible for the cost incurred by Company to acquire and install this equipment. The estimated costs of the installation are in Exhibit 1H.

Producer shall pay these estimated costs to Company as a deposit prior to Company's acquisition of the instrumentation transformers and revenue meters. After notification by the Producer that it will require a distributed generation meter, Company will need six weeks minimum delivery time for meter equipment. After equipment arrival and installation at the jobsite by the Producer's electrical contractor, Company will need a two week time period to schedule the meter equipment installation. Producer will be responsible for any replacement meters that become necessary over the period of the interconnection.

Producer shall also reimburse the Company for direct monthly communication fees it incurs in providing service.

Received On: February 15, 2013
IURC 30-DAY Filing No.: 3115
Indiana Utility Regulatory Commission

Network Upgrades Installed by Company but reimbursed and maintained at Producer Expense

The following equipment shall be acquired and installed by Company (the "Equipment"):

1) SCADA interface which may include fiber optic cable or a wireless radio.
2) Substation line potential device on all three phases of Circuit for synch check close supervision.
3) Substation SCADA interface including software and integration costs.
4) The13.2kV line work from interconnection pole to PCC.
5) Communication facilities to Company to perform recloser control and gather SCADA information. The communication path shall satisfy Company service dispatch needs for standard recloser control. The Producer's engineer will need to work with Company engineers to establish the communications link prior to connection during the construction phase when construction drawings are available.

Except for Equipment identified on a Rider 4 Billing Inventory and subject to an agreement under Rider 4 between IPL and the Producer, all costs incurred by the Company to acquire the Equipment and install it shall be funded by the Producer, including, but not limited to the cost incurred by Company to acquire the Equipment, Company's fully burdened labor cost associated with the Company employee time dedicated to installing this Equipment and the time of any contractor engaged by Company associated with the installation. Producer shall provide Company a deposit in the amount of $35,828 prior to the date Company commences construction as payment for the Equipment. Producer shall also reimburse Company for engineering and technical labor costs incurred by Company to develop protective relay settings and installation of additional substation equipment. Company shall initially credit all associated costs against the deposit paid by Producer. Costs in excess of the deposit shall be identified in an invoice forwarded to Producer by Company in accordance with Section 13 of the Agreement. Producer shall pay the invoice within twenty (20) days of the date the invoice is sent by Company to Producer. Exhibit 1H is an estimate of the costs of the Equipment to be installed by Company.

Company projects that the equipment and infrastructure it will install to enable interconnection of the Generation Facilities and Solar Facilities can be completed within twelve weeks from the commencement of construction, provided the Producer completes the facilities they are responsible for in a timely manner.

All Equipment shall be owned by Company except for the following:

None

This equipment shall be transferred to Producer upon payment to Company of all costs owed to Company. All Equipment owned by Company shall be maintained by Company consistent with good utility practice. Producer shall reimburse Company for all costs associated with maintaining Equipment owned by Company and not included on a Rider 4 Billing Inventory,

Received On: February 15, 2013
IURC 30-DAY Filing No.: 3115
Indiana Utility Regulatory Commission

including the replacement of infrastructure. Standard labor and overtime rates shall apply for work performed. Routine work shall be scheduled at least a month in advance or be performed at emergency overtime rates pending availability of crews and equipment. Company shall remit invoices to Producer for any maintenance pursuant to Section 13 of the Agreement. Producer shall pay such invoices within twenty (20) days of the date notice is sent.

Operating Conditions

The installation shall operate in the automatic mode as governed by the IEEE 1547 standard. The distributed resource (DR) shall operate the point of common coupling at 1.0 power factor (PF unity). The distributed resource (DR) shall be notified of any changes needed to the power factor (PF) schedule based on testing and operating experience after commissioning. The primary voltage schedule based on DR operation at 1.0 PF is 13.2 kV during all operating times.

The DR is not qualified to operate on an alternate feed from any other distribution circuit. The DR will be disconnected by Company during the time the circuit connects to the alternate feed. Company may need to use the alternate feed at unspecified times due to equipment failures, routine switching for construction or maintenance and other unspecified times due to abnormal conditions not planned by the utility.

The DR shall be limited to simultaneous startup of 1/3 of inverter generation per stage with a minimum of 1 minute delay between stages after the IEEE 1547 standard 5 minute delay. This staged startup helps to minimize system voltage or current fluctuations seen by COMPANY due to distributed generation additions.

The Producer must meet the requirements of IEEE 1547.1 before COMPANY will allow commercial operation. The Producer shall have a licensed professional engineer conduct start up testing in compliance with the IEEE 1547 standard. The test procedure shall follow the recommendations of IEEE 1547 section 5.2 and 1547.1 section 7 and be provided to Company in writing 30 days prior to the test. The Producer shall provide to Company a complete written test report. The start-up test shall initially energize a small portion of the DR such that there will not be a significant impact on the Company system during the first connection and testing period.

The Producer shall notify COMPANY prior to operating the distributed generation and request a witnessing test as dictated by IEEE-1547 section 5.4 with procedures detailed in footnote 19 stating that the test procedures are commonly provided by the equipment manufacturer(s). The Producer should have a written test procedure prior to the test which should contain check off boxes for all actions taken during the test. Producer shall provide COMPANY a copy of the test procedure at the conclusion of the test.

The Producer shall allow Company full control of the PCC disconnect switch in either the open or closed position including locking.

The Producer and Company will develop site specific operating procedures which will include site access details, expected switching operations that support safe operation, a contact name and associated information to facilitate 24x7 emergency communications, and describe a

Received On: February 15, 2013
IURC 30-DAY Filing No.: 3115
Indiana Utility Regulatory Commission

method to resolve any unforeseen operational issues should they occur over the life of the agreement.

Costs and Facilities Study

The costs in Exhibit 1H are preliminary estimates. Actual costs will be billed at the current time and material rates for services rendered. The estimated costs for the Owner network upgrades are expected to be within plus (+) or minus (-) 20 % of the actual cost. No change document or amendment will be required if costs do not exceed the estimate by more than 20 percent.

Attachments

Exhibit 1A Application for Interconnection

Exhibit 1B Drawing Preliminary One Line Diagram

Exhibit 1C Drawing Layout

Exhibit 1D Inverter Specification Sheet

Exhibit 1E COMPANY Proposed Connection Standard GB7-090

Exhibit 1F Certificate of Insurance

Exhibit 1H Interconnection Cost Summary

Received On: February 15, 2013
IURC 30-DAY Filing No.: 3115
Indiana Utility Regulatory Commission

Application For Interconnection

Level 3**- All Other Facilities

Application Date: 8/6/2012

Applicant Information *(Please use the tab key between fields.)*

Customer (Applicant) Name: Duke Realty

Applicant Address: 600 East 96h St., Suite 100

City/State/Zip Code: Indianapolis, IN 46240

Contact Person: Michael S. Gahimer

Email Address: michael.gahimer@dukerealty.com Phone: 317-808-6070

Generation Site Information

Service (Site) Address: Building 87, 5355 West 76th St.

City/State/Zip Code: Indianapolis, IN 46268

Phone Number: 317-808-6070 Lat/Long: 39-53' 26"N, 86-15' 15"W

Map-Pole Number: 142 IPL 225-B Meter No: IPL-0013178

Developer Information

Project Developer Name: Inovateus Solar Email Address: Peter.Rienks@inovateus.com, nathan@inovateus.com

Project Developer Address: 19890 State Line Rd,South Bend,IN 46637 Phone: 574-485-1410

Please provide names and contact information for other Contractor and Engineering firms involved in the design and installation of the general facilities:

Interconnection Information

Total Generating Capacity Output of Customer Facility (AC Power and Voltage): 3.0 MW, 13.8 kV

Type of Generator: ☒ Inverter-Based ☐ Synchronous ☐ Induction

Power Source: ☒ Solar ☐ Wind ☐ Diesel-fueled Reciprocating Engine
☐ Gas-Fueled Reciprocating Engine ☐ Gas Turbine ☐ Microturbine
☐ Other (Specify)

Is the Equipment "Certified" * as defined by 170 Indiana Administrative Code ("IAC") 4-4.3-5
☒ Yes ☐ No

Indicate all possible operating modes for this generator facility:

* Certified as defined in 170 IAC 4-4.3-5
** Level 3 as defined in 170 IAC 4-4.3-4(a)

Received On: February 15, 2013
IURC 30-DAY Filing No.: 3115
Indiana Utility Regulatory Commission

Application For Interconnection

Level 3**- All Other Facilities

- ☐ Emergency / Standby – Operated when Indianapolis Power & Light Company service is not available. Paralleling is for short durations.
- ☐ Peak Shaving – Operated during peak demand periods. Paralleling is for extended times.
- ☐ Base Load Power – Operated continuously at a predetermined output. Paralleling is continuous.
- ☐ Cogeneration – Operated primarily to produce thermal energy. Paralleling is extended or continuous.
- ☒ Renewable non-dispatched – Operated in response to an available renewable resource such as solar or wind. Paralleling is for extended times.
- ☐ Other – Describe:

Indicate the intended use of power generated from the proposed facility, subject to all applicable regulatory approvals.

- ☐ Sale of power to IPL by Rate CGS.
- ☐ Sale of power to IPL by Rate REP.
- ☒ Net Metering
- ☐ Internal Usage only
- ☐ Demand Response Resource
- ☐ Other - Explain

Level of Interconnection Review Requested:

- ☒ Level 3** for all other facilities

For this application to be considered complete, adequate documentation and information must be submitted that will allow Indianapolis Power & Light Company ("IPL") to determine the impact of the generation facilities on IPL's electric system and to confirm compliance by Customer with the provisions of 170 IAC 4-4.3 and IPL's requirements. The Applicant must submit the specific interconnection requirements contained in Attachment A for a Level 3 request. This application is subject to further consideration and study by IPL and the possible need for additional documentation and information from Applicant.

Fees

Level 3	Initial Review[1]	$100 plus, $2/kW of nameplate capacity.
	Impact Study	Non-binding, good faith cost estimate provided to customer.
	Facility Study	Non-binding, good faith cost estimate provided to customer.

[1] A portion of the Initial Review Fee used for processing, communicating with the Applicant and initial review of the application is not refundable. The remainder of the Initial Review Fee is applied toward the Impact Study Fee. A non-binding good faith

* Certified as defined in 170 IAC 4-4.3-5
** Level 3 as defined in 170 IAC 4-4.3-4(a)

Received On: February 15, 2013
IURC 30-DAY Filing No.: 3115
Indiana Utility Regulatory Commission

Application For Interconnection

Level 3**- All Other Facilities

cost estimate for the remainder of the Impact Study Fee will be provided to the Applicant. Actual costs will be billed or credited to the applicant following completion of the Impact and Facility Study.

Insurance Requirements

The Applicant shall provide evidence of homeowners, commercial or other insurance that provides coverage in the amount of at least $5 million for Comprehensive General Liability and Contractual Liability.

☒ Evidence of Insurance coverage provided during Interconnection Agreement phase.

Reference Documents

170 IAC Customer generator interconnection standards are located at the following web site. http://www.in.gov/legislative/iac/T01700/A00040.PDF?

Attachment A, Application for Interconnection Requirements

Submittal of Fees, Application and Documentation

Fees - Payment for the Initial Review shall be sent to IPL Distributed Generation Interconnections, Attn: Sonya Kunkel, 1230 W Morris St., Indianapolis, IN 46221. Please make checks payable to Indianapolis Power & Light Co. and include the customer's name and address on the check.

Application and Documentation - Please send the completed application and all documentation electronically to ipl.interconnection@aes.com using the standard e-mail formatting. All paper copies of documentation should be scanned electronically prior to submittal to IPL.

* Certified as defined in 170 IAC 4-4.3-5
** Level 3 as defined in 170 IAC 4-4.3-4(a)

Received On: February 15, 2013
IURC 30-DAY Filing No.: 3115
Indiana Utility Regulatory Commission

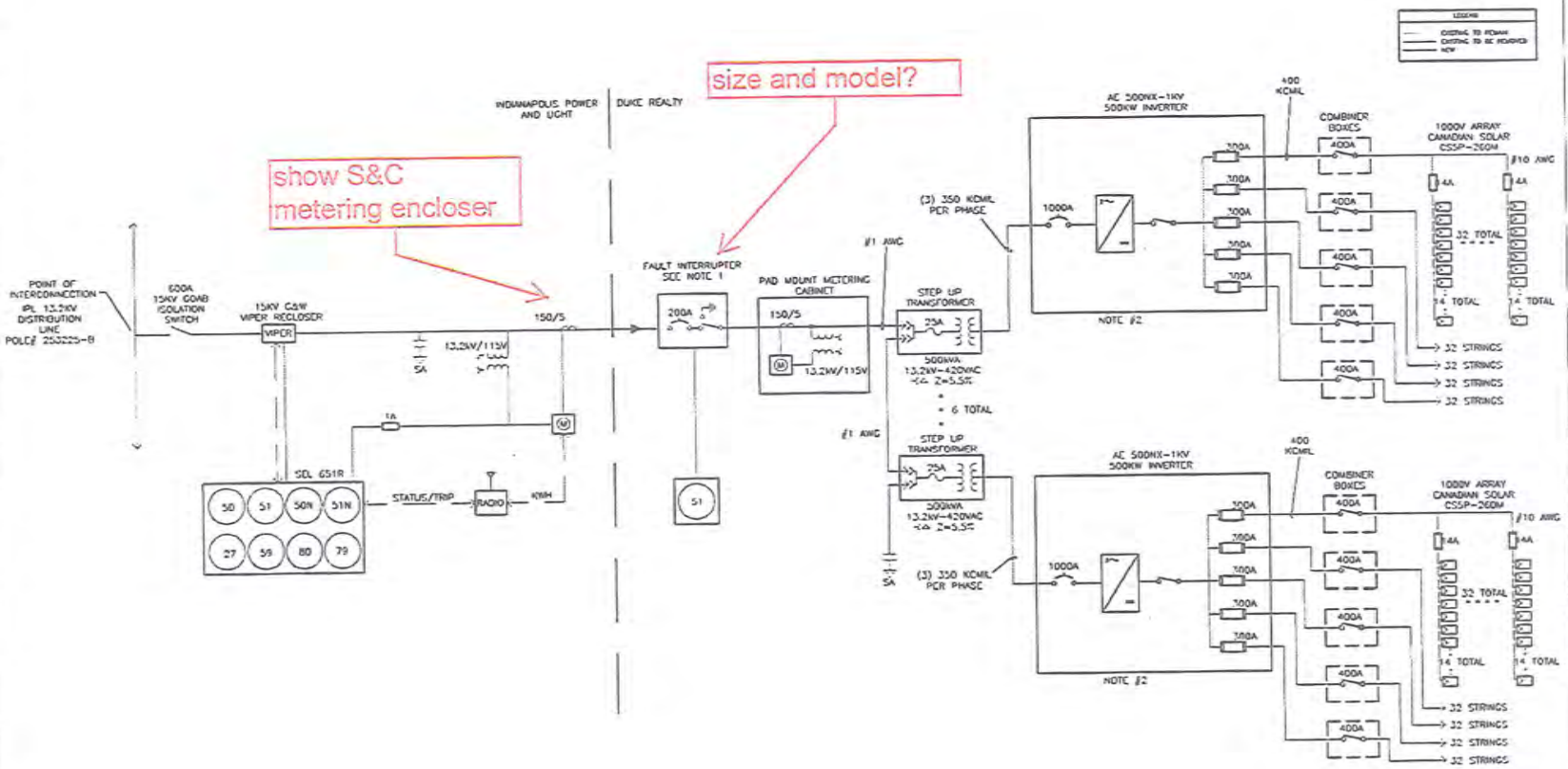

KEYNOTES

1. FAULT CURRENT RATINGS TO BE BASED ON UTILITY REQUIREMENTS. 200A FAULT INTERRUPTERS ARE TYPICALLY RATED FOR 12.5kA, 600A FAULT INTERRUPTERS ARE TYPICALLY RATED FOR 25kA
2. ALL INVERTERS ARE DESIGNED TO THE UL 1741-2010 STANDARD AND WILL NORMALLY OPERATE IN THE PRESCRIBED "GRID FOLLOWING" MODE. THE MAIN PV DISCONNECT POINT AT THE FAULT INTERRUPTER WILL HAVE THE CIRCUIT BREAKER PROGRAMMED TO BOTH COORDINATE WITH THE UPSTREAM UTILITY PROTECTION, AND PROTECT THE DOWNSTREAM CABLES. THERE IS NO CONTROL INTERLOCKING WHICH WOULD REQUIRE THE SUBMITTAL OF CONTROL DRAWINGS FOR RELAYS AND BREAKERS.

	Module (nameplate)	Module (temperature adjusted)	String	Combiner Box	Inverter	System
Quantity of Modules	1	1	14	448	2240	13440
Quantity of Strings	0	0	1	32	160	960
Quantity of Combiner Boxes	0	0	0	1	5	30
Quantity of Inverters	0	0	0	0	1	6
dc kW	0.26	0.26	3.64	116.48	582.4	3494.4
Voc maximum	60	70	920	920	920	920
Vmp nominal	49.3	49	690	690	690	690
Isc	5.62	5.64	5.64	180.6	503	5418
Imp	5.27	5.29	5.29	169.3	847	5080

NOTE:
A. THESE DRAWINGS ARE THE PROPERTY OF INOVATEUS SOLAR AND SHALL NOT BE DUPLICATED WITHOUT THE WRITTEN PERMISSION OF INOVATEUS SOLAR.

inovateus SOLAR
19890 State Line Rd
South Bend, IN 46637
877-876-SOLAR

PROJECT
DUKE
BUILDING 87
#12050374

CLIENT
DUKE REALTY

PROJECT ADDRESS
5355 W. 76TH ST.
INDIANAPOLIS, IN

PROJECT SIZE
3.0 MWac
PHOTOVOLTAIC SYSTEM

SYSTEM INFORMATION
MODULES: CANADIAN SOLAR CS5P-260M
QUANTITY: 13,440
INVERTERS: AE 500NX-1KV
QUANTITY: 6
MODULE TILT: 10° ROOF TILT: 0°
AZIMUTH: -2.19°

SCALE: NTS

JOSEPH JANCAUSKAS
PROFESSIONAL ENGINEER
CERTIFICATION #: PE11100602
DESIGNER: J.R. APPROVED BY: V.B.

REVISIONS
8/6/12 MODULE CHANGE
10/29/12 INTERCONNECT DIAGRAM
11/7/12 INTERCONNECT POINT

UTILITY
INTERCONNECT
E-1.1

JOSEPH R. JANCAUSKAS
REGISTERED
PE11100602
STATE OF INDIANA
PROFESSIONAL ENGINEER

Received On: February 15, 2013
IURC 30-DAY Filing No.: 3115
Indiana Utility Regulatory Commission

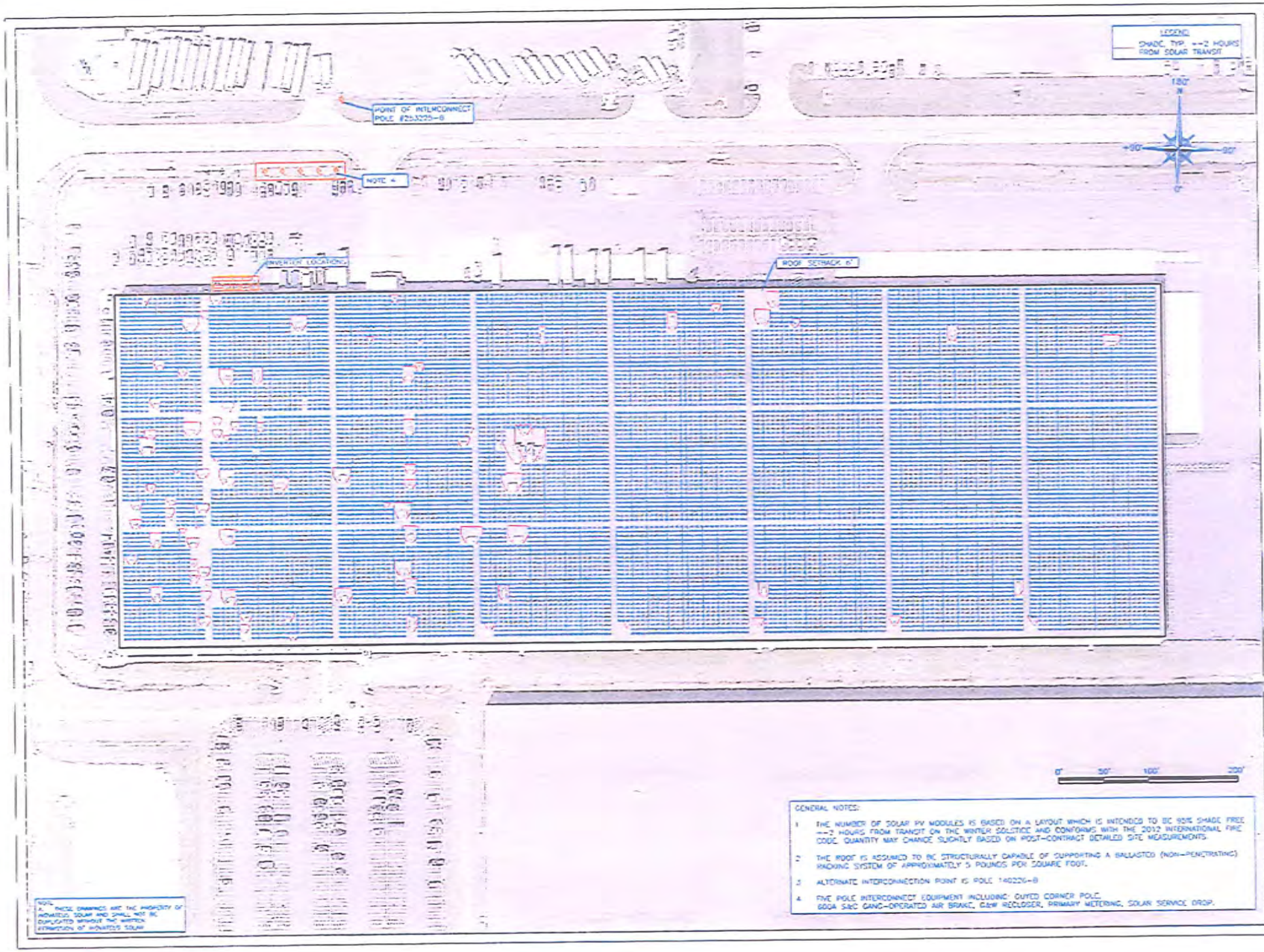

GENERAL NOTES:

1. THE NUMBER OF SOLAR PV MODULES IS BASED ON A LAYOUT WHICH IS INTENDED TO BE 95% SHADE FREE +-2 HOURS FROM TRANSIT ON THE WINTER SOLSTICE AND CONFORMS WITH THE 2012 INTERNATIONAL FIRE CODE. QUANTITY MAY CHANGE SLIGHTLY BASED ON POST-CONTRACT DETAILED SITE MEASUREMENTS.
2. THE ROOF IS ASSUMED TO BE STRUCTURALLY CAPABLE OF SUPPORTING A BALLASTED (NON-PENETRATING) RACKING SYSTEM OF APPROXIMATELY 5 POUNDS PER SQUARE FOOT.
3. ALTERNATE INTERCONNECTION POINT IS POLE 140226-B
4. FIVE POLE INTERCONNECT EQUIPMENT INCLUDING: GUYED CORNER POLE, 600A S&C GANG-OPERATED AIR BRAKE, G&W RECLOSER, PRIMARY METERING, SOLAR SERVICE DROP.

movateus SOLAR
19890 State Line Rd
South Bend, IN 46637
877-876-SOLAR

PROJECT
DUKE
BUILDING 87
#12050374

CLIENT
DUKE REALTY

PROJECT ADDRESS
5355 W. 76TH ST.
INDIANAPOLIS, IN

PROJECT SIZE
3.0 MWac
PHOTOVOLTAIC SYSTEM

SYSTEM INFORMATION
MODULES: CANADIAN SOLAR CS5P-260M
QUANTITY: 13,440
INVERTERS: AE 500NX-1KV
QUANTITY: 6
MODULE TILT: 10° ROOF TILT: 0°
AZIMUTH: -2.19°

SCALE: 1"=45'-0"

JOSEPH JANCAUSKAS
PROFESSIONAL ENGINEER
CERTIFICATION #: PE11100602
DESIGNER: J.R. APPROVED BY: V.B.

REVISIONS
- 8/6/12 MODULE CHANGE
- 10/29/12 INTERCONNECT DIAGRAM
- 11/7/12 INTERCONNECT POINT

LAYOUT
PLAN
PV-1

JOSEPH R. JANCAUSKAS
REGISTERED
PE11100602
STATE OF INDIANA
PROFESSIONAL ENGINEER

Received On: February 15, 2013
IURC 30-DAY Filing No.: 3115
Indiana Utility Regulatory Commission

CSA INTERNATIONAL

Letter of Attestation

Document: 2510921 **Master Contract:** 162806

Project: 2510921 **Date Issued:** April 10, 2012

Issued to: Advanced Energy Industries, Inc.
1625 Sharp Point Dr.
Fort Collins, CO 80525
USA

CSA International hereby confirms that it has completed an evaluation of
(Product Description and Model)

Solaron 500 1kV, Model 3159533-XXXX

CSA International hereby attests that the products identified above and described in test report
162806-2510921 ***dated*** April 10, 2012
complies with the following standards/tests, to the extent applicable:

UL 1741:2010 / IEEE 1547:2003

UL 1741 Cl. 46.1 – Tests from IEEE 1547 listed below
IEEE 1547 Cl. 4.3.1 – DC Injection
IEEE 1547 Cl. 4.3.2 – Flicker
IEEE 1547 Cl. 4.3.3 – Harmonics

Issued by: Chih Wu, Eng'g Technologist

THIS LETTER OF ATTESTATION DOES NOT AUTHORIZE THE USE OF THE CSA MARK ON THE SUBJECT PRODUCTS.
QUOTATIONS FROM THE TEST REPORT OR THE USE OF THE NAME OF THE CANADIAN STANDARDS ASSOCIATION AND CSA INTERNATIONAL OR ITS REGISTERED TRADEMARK, IN ANY WAY, IS NOT PERMITTED WITHOUT PRIOR WRITTEN CONSENT OF THE CANADIAN STANDARDS ASSOCIATION OR CSA INTERNATIONAL.

Received On: February 15, 2013
IURC 30-DAY Filing No.: 3115
Indiana Utility Regulatory Commission

ADVANCED ENERGY®

AE 500NX-1kV (formerly known as Solaron® 500 1kV) Grid-Tied PV Inverters

OVERVIEW

- Achieve the lowest levelized cost of energy (LCOE)
- Increase energy harvests
- Reduce balance-of-system (BoS) costs
- Monitor and control with flexible, integrated communications
- Lower operations and maintenance (O&M) costs

FEATURES

- 500 kW, high-power, transformerless design
- 1000 VDC compatible
- Grid integration controls and optional voltage ride through (HVRT, LVRT, ZVRT)
- Integrated IDS™ data monitoring and communications
- Integrated DC Master Combiner and Fusing Area
- Optional Integrated AC Disconnect Switch
- Parallel connections into single, medium-voltage transformer
- Three decades of experience in solar PV industry
- 24/7/ 365 global service and support

SPECIFICATIONS

Physical

Dimensions	83.4" (H) x 128.1" (W) x 41.2" (D) 212 cm (H) x 326 cm (W) x 105 cm (D) Dimensions include cabinet handles and tie-down feet, and AC/DC Switchgear Cabinet
Weight	3600 lb (1633 kg) unit weight 4400 lb (2000 kg) shipping weight

Received On: February 15, 2013
IURC 30-DAY Filing No.: 3115
Indiana Utility Regulatory Commission

Enclosure	Outdoor ready, sturdy steel cabinet
Environmental Rating	NEMA 3R with NEMA 4 (electronics)
Connector and Cable Specifications	
DC Input Power Connectors	Busbars w/10 lug positions per pole: M8 studs
AC Output Power Connectors	Busbars w/4 lug positions per phase; M12 bolts
User Interface	Front panel LCD and keypad ; security lock-outs and off button

Electrical

AC Output Power	
Max Power	500 kW at 420 VAC
Voltage Range	±420 VAC ± 10%, 3 Φ, 560 Hz, grounded Wye connection
Frequency	60 Hz
Line Power Factor	> 0.99 typical
AC Current Distortion/THD	< 3% @500kW, 420 VAC
AC Line Current	687 Arms typical 700 Arms Continuous output current rating (configurable)
Fault Current Contribution	687 Arms, 160ms at 420 VAC
Peak Efficiency	97.5% (CEC method)
DC Input Power	
Array Configuration	1000V strings centered at AC neutral through grounded Wye
Voltage	600 to 1000 VDC (± 300 to ± 500 VDC)
MPP DC Current	850 ADC max
MPPT Window	600 to 1000 VDC (± 300 to ± 500 VDC): full power to 850
Open-Circuit Wake-Up Voltage	700 VDC default (± 350 VDC) configurable
Standby Tare Losses	< 100 W
Utilitly Power Capabilities	
Active Power Range	500 kW to 0 kW; remotely adjustable set point at 1 kW increments
Reactive Power Range	0.90 leading to 0.90 lagging 509 kVA to 50°C
Ramp Rate (on)	100 kW/s maximum; adjustable at 0.1% increments
Delayed Reconnection	5 to 7200 seconds; adjustable
Inverter On/Off	Remotely controllable
Over-Voltage Response	110% ≤ VAC < 120j%: 0.16 to 5.0 sec adjustable
Anti-Islanding	Designed to UL 1741-2010
Voltage Ride-Through	Optional; Anti-islanding detection disabled
High-Voltage Ride-Through (HVRT)	Adjustable to regional requirements
Low-Voltage Ride-Through (LVRT)	100% ≤ VAC < 120%: 0.16 to 1.0 sec adjustable
Zero-Voltage Ride-Through (ZVRT)	50% ≤ VAC < 90%: 0.16 to 3.5 sec adjustable 0% ≤ VAC < 50%: 0.16 to 2.0 sec adjustab

Received On: February 15, 2013
IURC 30-DAY Filing No.: 3115
Indiana Utility Regulatory Commission

Frequency Tolerance	Adjustable to regional requirements f ≤ 60.5 Hz; adjustable instantaneous (<10 cycles) f ≤ 59.3 Hz; trip delay 0.16 to 540 sec f ≤ 57.0 Hz; adjustable; instantaneous (<10 cycles)
Factory-Installed Communication Interfaces	RS-232, RS-422, and RS-485, Ethernet PCMCIA expansion slot Modbus/TCP and Modbus/RTU
Data Storage	>10 years / 2 GB SD card (upgradeable)
Data Monitoring	SEEDS™ data monitoring (optional); IDS™ compatible with various 3rd party services

Environmental

Ambient Operating Temperature	-4°F to 122°F (-20°C to 50°C)
Storage Temperature	-22°F to 158°F (-30°C to 70°C)
Relative Operating Humidity	0% to 95% non-condensing
Atmospheric Pressure	800 to 1060 mbar (80 to 106 kPa)
Elevation	6000' (1829 m) max
Cooling Medium	Combination air and liquid cooling (self-contained system)

Regulatory

Directives and Standards	Designed in accordance with UL 1741-2010 except where grid integration controls supersede

Specifications are subject to change without notice.

REFERENCE MATERIAL
Literature Downloads

AE 500NX data sheet
AE 500NX-HE data sheet
AE 500NX-1kV data sheet
AE 500NX-E data sheet
AE 500NX-lkV (50Hz) data sheet
Remote PV Tie (RPT™) accessory data sheet
LCOE for solar PV installations
Case Study: Advanced Energy Inverters Riide-Through PG&E Low Voltage Events
White Paper: Design Characteristics of High-Power Photovoltaic Inverters
Inverter Cost Analysis: The Right Metrics For Improved Payback

More Information
Contact sales for additional information about this product
Find your local sales representative or authorized distributor
Want to lower your LCOE?
Register and opt in to receive solar-specific news and announcements from Advanced Energy
Regulatory links

Tools

Received On: February 15, 2013
IURC 30-DAY Filing No.: 3115
Indiana Utility Regulatory Commission

Solar string calculator

© Copyright 2012 Advanced Energy Industries, Inc. All rights reserved

Received On: February 15, 2013
IURC 30-DAY Filing No.: 3115
Indiana Utility Regulatory Commission

ALL RENEWABLE ENERGY GENERATORS WITH 4.1KV OR 13.2KV INTERCONNECTIONS MUST HAVE A GANG OPERATED DISCONNECT SWITCH, RECLOSER, A 4.1KV OR 13.2KV METER POINT, AND BETWEEN THE IPL DISTRIBUTION CIRCUIT AND THE RENEWABLE GENERATION.

SEE ELECTRIC SERVICE AND METER MANUAL SECTION 175

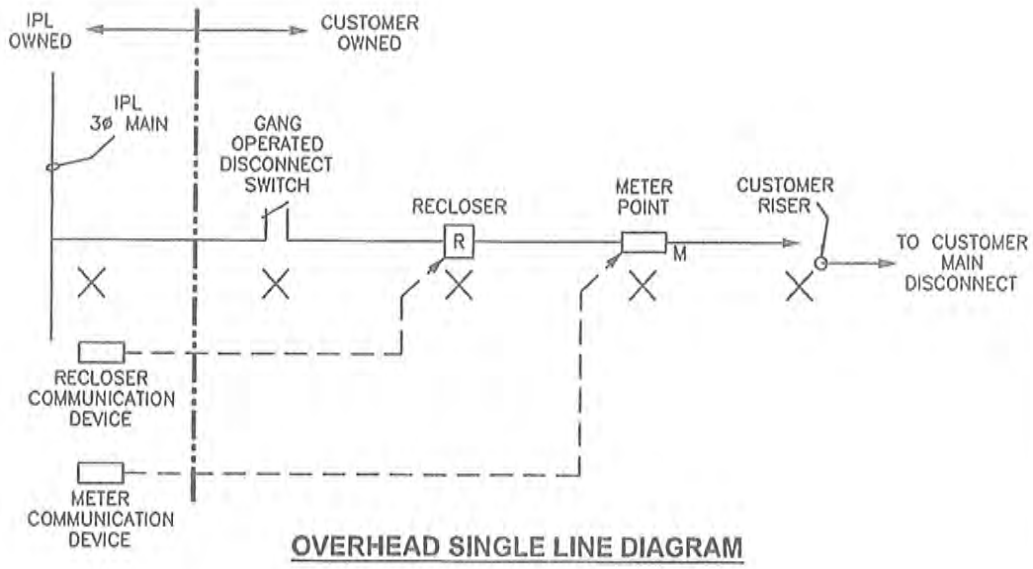

OVERHEAD SINGLE LINE DIAGRAM

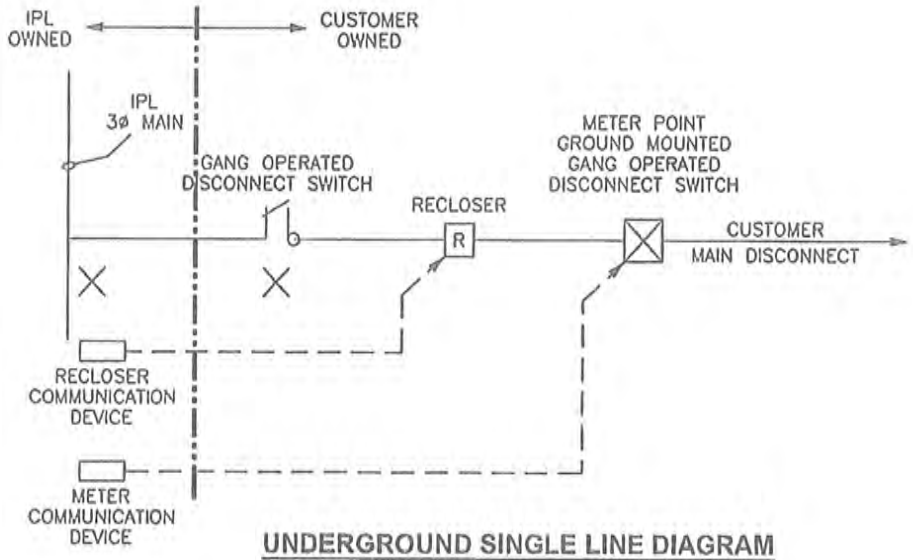

UNDERGROUND SINGLE LINE DIAGRAM

NOTES:

1. ANY DISTRIBUTED GENERATION INTERCONNECTION GREATER THAN 1500KVA MUST BE CONNECTED AT PRIMARY VOLTAGE LEVEL.
2. ANY DISTRIBUTED GENERATION INTERCONNECTION 500KVA OR GREATER MUST HAVE FIBER COMMUNICATIONS TIE TO AN IPL SUBSTATION.

4.1 KV OR 13.2 KV DISTRIBUTION INTERCONNECTION ONE-LINE

REV 12-18-12

PROPOSED

GB7-090

Received On: February 15, 2013
IURC 30-DAY Filing No.: 3115
Indiana Utility Regulatory Commission

Duke
REALTY CORPORATION

January 15, 2013

Indianapolis Power & Light Company
Attention: Ron Cooper
1230 West Morris Street
Indianapolis, IN 46221

Subject: Indianapolis Power & Light Company's ("IPL") Renewable Energy Production Program ("Rate REP") – Site Control

Dear Mr. Cooper:

Duke Realty Limited Partnership ("Customer") understands that Inovateus Solar, LLC ("Producer") has submitted an application to participate in IPL's Rate REP. The proposed generation facilities are to be located on property located at 5550 West 74th Street, 8252 Zionsville Road and 4925 West 86th Street, in Indianapolis, Indiana, 46268 (the "Sites"). Customer owns the Sites and intends to grant to Producer the right to locate generation facilities on the Sites. I hereby represent, warrant and covenant that Customer possesses all authority and control over the Sites necessary to grant Producer the right to occupy them for purposes of constructing, installing and operating the generation facilities; Customer currently uses retail electric service provided by IPL; that Customer is not pursuing arrangements with any other entity to install generation facilities at the site for purposes of making sales pursuant to Rate REP; and that Customer intends to permit installation of generation facilities at the Sites, subject to reaching a mutually acceptable contractual arrangement with Producer.

Very Truly Yours,

Duke Realty Limited Partnership,
an Indiana limited partnership,

By: Duke Realty Corporation,
an Indiana corporation
its sole general partner

By: Michael S. Gahimer
Michael S. Gahimer
Director, Energy Management

CC: Charlie Podell (via e-mail)
Peter Rienks (via e-mail)
Nathan Vogel (via (e-mail)
TJ Kanczuzewski (via e-mail)

600 East 96th Street
Suite 100
Indianapolis, IN 46240
317.808.6000
www.dukerealty.com

Received On: February 15, 2013
IURC 30-DAY Filing No.: 3115
Indiana Utility Regulatory Commission

Interconnection Cost Summary

EXHIBIT 1H

Project: 903013	5355 W 76th Street	Total Estimated Cost
3 MW	Georgetown 3	
Fiber		$0
Meter Radio Link		$5,350
SCADA at Sub		$0
Fiber Optic and/or wireless DTT option		$0
Distr. Lines		$15,863
Recloser Commissioning		$2,364
Relay Depart. Costs		$0
Meter Depart. Costs		$12,251
Reliability (Clouse)		$0
Directional Relays for emergency breaker		$0
13.2-kV Construction/ Reconductoring		$0
Total Customer Cost		$35,828

Received On: February 15, 2013
IURC 30-DAY Filing No.: 3115
Indiana Utility Regulatory Commission

EXHIBIT B

CONSENT AND AGREEMENT

FOR THE BENEFIT OF THE FINANCING PARTIES

This CONSENT AND AGREEMENT FOR THE BENEFIT OF THE FINANCING PARTIES, (this "Consent") dated _____, 201_ , is by and among Indianapolis Power & Light Company, an Indiana corporation ("Company"), _____ ("Financing Party") and _____, a[n] _____ company ("Producer"). Reference is made to the Power Purchase Agreement for Qualifying Renewable Energy Production Facilities dated [_____], 2013 (the "Agreement"), by and between Producer and Company. Capitalized terms used herein but not defined herein shall have the meanings set forth in the Agreement.

RECITALS

A. Producer has entered into that certain [Financing Agreement] dated as of _____, 201_ (the "Financing Agreement") by and among Producer and the financial institutions party thereto (the "Financing Parties") pursuant to which the Financing Parties have agreed to make certain credit facilities available to Producer;

B. As security for the "Obligations" as such term is defined in the Financing Agreement and excluding for the avoidance of doubt any obligations with respect to any other power project other than the Facility (the "Secured Obligations"), Producer will enter into a Security Agreement ("Security Agreement") pursuant to which Producer will assign all of its right, title and interest in, to and under the Agreement to the Financing Parties. The Security Agreement and any other related agreements, security documents and financing documents are referred to hereinafter as the "Financing Documents."

NOW THEREFORE, in consideration of the foregoing, and for other good and valuable consideration, the receipt and adequacy of which are hereby acknowledged, and intending to be legally bound, the parties hereto hereby agree as follows:

(a) Consent to Collateral Assignment. Company consents to the assignment by Producer to one or more Financing Parties that has provided financing of the Facility, of Producer's right, title and interest in and to the Agreement (the "Assigned Rights") as security for the performance of the Secured Obligations. Company further consents to the subsequent transfer of the Assigned Rights to any person in connection with the exercise by the Financing Party of its rights and remedies under the Financing Documents following the occurrence of an event of default thereunder (any person to whom an assignment may be made pursuant to this Section (a), a "Transferee").

(b) Rights Upon Event of Default under Financing Documents. Company hereby acknowledges and agrees, notwithstanding anything to the contrary contained in the Agreement, that none of the following shall constitute, as between Company and the Financing Party, a

Received On: February 15, 2013
IURC 30-DAY Filing No.: 3115
Indiana Utility Regulatory Commission

default by the Producer under the Agreement or shall result in a termination thereof, so long as all the duties and obligations of the Producer are being performed in accordance with the terms thereof:

(i) the assignment of the Agreement to the Financing Party or to a Transferee;

(ii) the Financing Party's or Transferee's actions to foreclose its security interest in the Agreement or any other assets of the Producer, including the Facility, and to take possession of and operate the Facility or any portion thereof and to perform all obligations to be performed by the Producer under the Agreement; and

(iii) the Financing Party's or Transferee's acquisition of the Agreement or any other assets of the Producer, including the Facility, by an assignment as authorized under the Financing Documents following the occurrence of an event of default thereunder and the subsequent assignment or transfer of the Agreement or any other assets of the Producer, including the Facility, to a third party in connection with any sale of the Facility, pursuant to the terms of this Consent, provided that each such person or Transferee, pays all amounts due and owing to Company and assumes and agrees to perform all of the Producer's obligations under the Agreement, both prospective and accrued, including the obligation to cure any then existing defaults capable of cure by performance or the payment of money damages, subject to the terms and conditions of the Agreement. The Financing Party shall provide Company with prior written notice of any assignment of the Agreement permitted by Section (a).

(c) Notices of Default. Company shall deliver to the Financing Parties, concurrently with delivery to Producer, a copy of each notice of Producer Default, if any, given by Company under the Agreement, inclusive of a reasonable description of Producer Default, if any. No such notice will be effective absent delivery to the Financing Parties. Absent a Producer Default, Company will not mutually agree with Producer to terminate the Agreement without the written consent of the Financing Parties.

(d) Right to Cure. Company will not exercise any right to terminate or suspend the Agreement unless it shall have given the Financing Party prior written notice by sending notice to the Financing Party (at the addresses provided to Company by Producer within one hundred-twenty (120) days after the Effective Date, as defined in the General Terms and Conditions of the Power Purchase Agreement) of its intent to terminate or suspend this Agreement, specifying the condition giving rise to such right, and the Financing Party shall not have caused to be cured the condition giving rise to the right of termination or suspension within thirty (30) days after such notice or (if longer) the periods provided for in this Agreement. The Financing Parties shall have the right, but not the obligation, to pay all sums due under the Agreement and to perform any other act, duty or obligation required of Producer thereunder or cause to be cured any default of Producer thereunder in the time and manner provided by the terms of the Agreement. Nothing herein requires a Financing Party to cure any default of Producer under the Agreement or (unless and until such Financing Party or the Transferee has succeeded to Producer's interests under this Agreement) to perform any act, duty or obligation of Producer under the Agreement, but Company hereby gives the Financing Parties the option to do so. The Parties' respective

Received On: February 15, 2013
IURC 30-DAY Filing No.: 3115
Indiana Utility Regulatory Commission

obligations will otherwise remain in effect during any cure period; provided that if such Producer Default cannot reasonably be cured by a Financing Party within such period and such Financing Party commences and continuously pursues cure of such default within such period, such period for cure will be extended for a reasonable period of time under the circumstances, such period not to exceed an additional ninety (90) days.

If a Financing Party (including any Transferee), pursuant to an exercise of remedies by such Financing Party under the Financing Documents, shall acquire title to or control of Producer's assets and shall, within the time periods described above, cure all Producer Defaults under the Agreement existing as of the date of such change in title or control in the manner required by the Agreement and which are capable of cure by a third person or entity, then such person or entity shall no longer be in default under the Agreement, and the Agreement shall continue in full force and effect.

(e) No Company Liability on Debt. Nothing herein shall be deemed to make Company responsible or liable for any obligations of Producer pursuant to the Financing Documents (including, without limitation, any repayment obligations for amounts borrowed under the Financing Agreement and any indemnity obligation under the Financing Documents), and Company's execution of this Consent and Agreement shall not be deemed an assumption of any of Producer's obligations thereunder.

(f) No Default. Company represents and warrants to the Financing Parties that neither Company nor, to the actual knowledge of Company, Producer, is in default of any of its obligations under the Agreement. To the actual knowledge of Company, after giving effect to the consent to such assignment by Company contained herein, there exists no event or condition which would, either immediately or with the passage of time or giving of notice, or both, enable either Company or Producer to excuse, terminate or suspend its obligations under the Agreement.

(g) Performance of Obligations. During any period of possession of the Facility by the Financing Party or its Transferee and/or during the pendency of any foreclosure proceedings instituted by the Financing Party or its Transferee, the Financing Party or its Transferee shall perform or cause to be performed all duties and obligations of the Producer under the Agreement. Following acquisition of the Facility by the Financing Party or its Transferee as a result of either foreclosure or acceptance of an assignment in lieu of foreclosure, or by a purchaser at a foreclosure sale, the Financing Party or its Transferee shall assume the obligations of the Producer under the Agreement, the Agreement shall remain in full force and effect and the Financing Party or its Transferee or party acquiring title to the Producer's interest in the Agreement shall immediately cure all monetary defaults of the Producer under the Agreement and shall, as promptly as reasonably possible, commence the cure of all defaults thereunder and thereafter diligently process such cure to completion.

(h) New Agreement. Upon any rejection or other termination of the Agreement pursuant to any process undertaken with respect to Producer under the United States Bankruptcy Code, at the request of a Financing Party made within ninety (90) days of such termination or rejection, Company shall enter into a new agreement (the "New Agreement") with such Financing Party or

Received On: February 15, 2013
IURC 30-DAY Filing No.: 3115
Indiana Utility Regulatory Commission

its assignee having the same terms and conditions as the Agreement. The Financing Party or its Transferee shall pay to Company all monetary charges payable by the Producer under the terms of the Agreement up to the date of execution of the New Agreement, as if the Agreement had not been terminated, foreclosed, rejected or disaffirmed, less collections by Company, if any, from the Producer. The Financing Party or its Transferee shall perform all other obligations of the Producer under the terms of the Agreement, to the extent performance is then due and susceptible of being cured and performed by the Financing Party or its Transferee on or before the date of the New Agreement. The Financing Party or its Transferee shall agree in writing to perform, or cause to be performed within thirty (30) days of the date of the New Agreement, all other non-monetary obligations which have not been performed by the Producer and would have accrued under the Agreement up to the date of commencement of the New Agreement. The Producer hereby acknowledges and hereby declares for the benefit of the Company and the Financing Party that any New Agreement shall be free of any and all rights of the Producer.

(i) Notices. All notices and other communications provided by Company to the Financing Party or a Transferee shall be delivered in writing concurrently with delivery thereof to the Producer. All notices provided to any party pursuant to this Consent shall be in writing or by facsimile, shall refer on their face to the Agreement (although failure to so refer shall not render any such notice or communication ineffective), and addressed, delivered or transmitted to such party at its address or facsimile number set forth below its signature hereto or at such other address or facsimile number as may be designated by such party in a notice to the other parties. Any notice, if mailed and properly addressed with postage prepaid, or if properly addressed and sent by prepaid courier service, shall be deemed given when received; any notice, if transmitted by facsimile, shall be deemed given when transmitted.

(j) No Waiver. Nothing contained in this Consent shall be deemed to constitute a waiver or release by Company of (i) Company's right to terminate (A) the Agreement and/or (B) the rights of the Financing Party (or its Transferee) under this Consent, or Company's right to recover damages, in the event that the Financing Party (or its Transferee) breaches or in any manner defaults under the terms of the Agreement (after express assumption by any such party of the Producer's interest in the Agreement) or any New Agreement; or (ii) any right of Company to seek specific performance of any obligation owing to Company under the Agreement or this Consent.

(k) Legal Opinion. Upon the request of the Financing Party (or its Transferee), Company shall deliver legal opinions relating to the due authorization, execution and delivery by Company of the Agreement, this Consent, and their enforceability against Company, and relating to no violations or conflicts with other documents or laws, no consents or waivers, no litigation, and Company's organization, which legal opinions shall be in form reasonably satisfactory to the Financing Party (or its Transferee). Producer and Financing Parties shall reimburse Company (and if applicable, Customer) for the reasonable costs of any direct out of pocket expenses (including reasonable fees and expenses of outside counsel) incurred by Company (and if applicable, Customer) in the preparation, negotiation, execution and delivery of any documents requested by Producer or Financing Party requested under this Section.

(l) Miscellaneous.

Received On: February 15, 2013
IURC 30-DAY Filing No.: 3115
Indiana Utility Regulatory Commission

(i) Separate Counterparts; Amendments, Waiver. This Consent may be executed in separate counterparts, each of which when so executed and delivered shall be an original but all such counterparts shall constitute one and the same instrument. Neither this Consent nor any of the terms hereof may be terminated, amended, supplemented, waived or modified except by an instrument in writing signed by each of Company, the Producer, and the Financing Party (or its Transferee), as the case may be.

(ii) Severability of Provisions. Any provision of this Consent which is prohibited or unenforceable in any jurisdiction shall, as to such jurisdiction, be ineffective to the extent of such prohibition or unenforceability without invalidating the remaining provisions hereof, and any such prohibition or unenforceability in any jurisdiction shall not invalidate or render unenforceable such provision in any other jurisdiction.

(iii) Successors and Assigns. This Consent shall be binding upon and shall inure to the benefit of each of the parties hereto and its permitted successors and assigns.

(iv) Governing Law. THIS CONSENT SHALL IN ALL RESPECTS BE GOVERNED BY, AND CONSTRUED IN ACCORDANCE WITH, THE LAWS OF THE STATE OF INDIANA, INCLUDING ALL MATTERS OF CONSTRUCTION, VALIDITY AND PERFORMANCE.

(v) Waiver of Jury Trial. COMPANY, THE PRODUCER AND THE FINANCING PARTY HEREBY KNOWINGLY, VOLUNTARILY AND INTENTIONALLY WAIVE ANY RIGHTS THEY MAY HAVE TO A TRIAL BY JURY IN RESPECT OF ANY LITIGATION BASED HEREON, OR ARISING OUT OF, UNDER, OR IN CONNECTION WITH, THIS CONSENT OR THE ASSIGNED AGREEMENT, OR ANY COURSE OF CONDUCT, COURSE OF DEALING, STATEMENTS (WHETHER ORAL OR WRITTEN) OR ACTIONS OF COMPANY, THE PRODUCER OR THE FINANCING PARTY.

(vi) Headings Descriptive. The headings of the several sections and subsections, of this Consent are inserted for convenience only and shall not in any way affect the meaning or construction of any provision of this Consent.

(vii) Entire Agreement. This Consent and any agreement, document, or instrument attached hereto or referred to herein integrate all the terms and conditions mentioned herein or incidental hereto and supersede all oral negotiations and prior writings in respect to the subject matter hereof. In the event of any conflict between the terms, conditions and provisions of this Consent and any such agreement, document or instrument, the terms, conditions and provisions of this Consent shall prevail.

Received On: February 15, 2013
IURC 30-DAY Filing No.: 3115
Indiana Utility Regulatory Commission

(viii) No Third Party Beneficiaries; Further Assurances. This Consent shall be for the sole benefit of the parties hereto and their respective successors and assigns. Upon the request of the Financing Party (or its Transferee), Company agrees to execute and deliver all such instruments reasonably acceptable to Company and take all such action reasonably acceptable to Company as may be necessary to effectuate fully the purposes of this Consent.

IN WITNESS WHEREOF, the parties hereto have caused this Consent to be executed by their respective officers thereunto duly authorized as of the day and year first above written.

INDIANAPOLIS POWER & LIGHT COMPANY

By:_____
Name:
Title:
Address:

Facsimile No.:
Attention:

[Financing Party]

By:_____
Name:
Title:

By:_____
Name:
Title:
Address:

Facsimile No.:
Attention:

[Insert Name of Producer]

By:_____
Name:
Title:
Address:

Received On: February 15, 2013
IURC 30-DAY Filing No.: 3115
Indiana Utility Regulatory Commission

Facsimile No.:
Attention:

Received On: February 15, 2013
IURC 30-DAY Filing No.: 3115
Indiana Utility Regulatory Commission

Verified Statement of Indianapolis Power & Light Company (IPL)

Concerning a Power Purchase Agreement for Qualifying Renewable Energy Power Production between Duke Realty Limited Partnership, Inovateus Solar LLC and IPL

Indianapolis Power & Light Company complied with the Notice Requirements under 170 IAC 1-6-6 in the following manner:

- beginning on February 12, 2013 and continuing through the filing date, the attached notice was posted in the Customer Service Office at 2102 N. Illinois Street

- beginning on February 12, 2013 and continuing through the filing date, the same notice was posted on IPL's website under the Pending section of the Rates, Rules and Regulations area

- a legal notice placed in the Indianapolis Star on February 12, 2013 as evidenced by the attached Publishers Affidavit; and

- beginning on the filing date, a copy of the Power Purchase Agreement for Qualifying Renewable Energy Power Production between Duke Realty Limited Partnership, Inovateus Solar LLC and IPL, the 30 day filing will be included on IPL's website under the Pending section of the Rates, Rules and Regulations area.

I affirm under penalties for perjury that the foregoing representations are true to the best of my knowledge, information, and belief.

Dated this 15th day of February, 2013.

John E. Haselden, P.E.
Principal Engineer

Received On: February 15, 2013
IURC 30-DAY Filing No.: 3115
Indiana Utility Regulatory Commission

03633-6036560

LEGAL NOTICE

Notice is hereby given that on or about February 15, 2013, Indianapolis Power & Light Company expects to submit a Power Purchase Agreement for Qualifying Renewable Energy Power Production between Vertellus Agriculture and Nutrition Specialties LLC and Inovateus Solar, LLC and IPL dated February 4, 2013.

In addition, notice is hereby given that on or about February 15, 2013, Indianapolis Power & Light Company expects to submit three Power Purchase Agreements for Qualifying Renewable Energy Power Production between Duke Realty Limited Liability Partnership, Inovateus Solar, LLC and IPL dated February 4, 2013.

In addition, notice is hereby given that on or about February 15, 2013, Indianapolis Power & Light Company expects to submit a Power Purchase Agreement for Qualifying Renewable Energy Power Production between Omnisource Corporation, NGP Lenape Solar I, LLC and IPL dated February 4, 2013.

The Commission approved IPL's Rate REP (Renewable Energy Production) in its Order dated February 10, 2010 in Cause No. 43623 (Phase 1), and approved further modifications to Rate REP in its Order dated March 7, 2012 in Cause 44018, which authorized the long-term contracting of Qualifying Renewable Energy Power Production for up to fifteen (15) years subject to Commission approval of each contract. IPL anticipates approval of the filings on or before March 6, 2013.

This notice is provided to the public pursuant to 170 IAC 1-6-6. The contact information, to which an objection should be made, is as follows:

Secretary
Indiana Utility Regulatory Commission
101 W. Washington Street, Suite 1500 East
Indianapolis, Indiana 46204
Telephone:(317) 232-2700
Fax: (317) 232-6758
Email: info@urc.in.gov

Office of Utility Consumer Counselor
115 W. Washington Street, Suite 1500 South
Indianapolis, Indiana 46204
Telephone:(317) 232-2484
Toll Free: 1-888-441-2494
Fax: (317) 232-5923
Email: uccinfo@oucc.in.gov

Dated February 12, 2013.

(S - 2/12/13 - 6036560)

Form (

PUBLISHER'S AFFIDAVIT

State of Indiana SS:
MARION County

Personally appeared before me, a notary public in and for said county and state, the undersigned **Kerry Dodson** who, being duly sworn, says that SHE is clerk of the INDIANAPOLIS NEWSPAPERS a DAILY STAR newspaper of general circulation printed and published in the English language in the city of INDIANAPOLIS in state and county aforesaid, and that the printed matter attached hereto is a true copy, which was duly published in said paper for 1 time(s), between the dates of:

02/12/2013 and **02/12/2013**

Kerry Dodson — Clerk
Title

Subscribed and sworn to before me on **02/12/2013**

Louise M Powell
Notary Public

My commission expires: _____

LOUISE M. POWELL
NOTARY PUBLIC
SEAL
STATE OF INDIANA
MY COMMISSION EXPIRES February 28, 2016

Received On: February 15, 2013
IURC 30-DAY Filing No.: 3115
Indiana Utility Regulatory Commission

LEGAL NOTICE

Notice is hereby given that on or about February 15, 2013, Indianapolis Power & Light Company expects to submit a Power Purchase Agreement for Qualifying Renewable Energy Power Production between Vertellus Agriculture and Nutrition Specialties LLC and Inovateus Solar, LLC and IPL dated February 4, 2013.

In addition, notice is hereby given that on or about February 15, 2013, Indianapolis Power & Light Company expects to submit three Power Purchase Agreements for Qualifying Renewable Energy Power Production between Duke Realty Limited Liability Partnership, Inovateus Solar, LLC and IPL dated February 4, 2013.

In addition, notice is hereby given that on or about February 15, 2013, Indianapolis Power & Light Company expects to submit a Power Purchase Agreement for Qualifying Renewable Energy Power Production between Omnisource Corporation, NGP Lenape Solar I, LLC and IPL dated February 4, 2013.

The Commission approved IPL's Rate REP (Renewable Energy Production) in its Order dated February 10, 2010 in Cause No. 43623 (Phase 1), and approved further modifications to Rate REP in its Order dated March 7, 2012 in Cause 44018, which authorized the long-term contracting of Qualifying Renewable Energy Power Production for up to fifteen (15) years subject to Commission approval of each contract. IPL anticipates approval of the filings on or before March 6, 2013.

This notice is provided to the public pursuant to 170 IAC 1-6-6. The contact information, to which an objection should be made, is as follows:

Secretary
Indiana Utility Regulatory Commission
101 W. Washington Street, Suite 1500 East
Indianapolis, Indiana 46204
Telephone:(317) 232-2700
Fax: (317) 232-6758
Email: info@urc.in.gov

Office of Utility Consumer Counselor
115 W. Washington Street, Suite 1500 South
Indianapolis, Indiana 46204
Telephone:(317) 232-2484
Toll Free: 1-888-441-2494
Fax: (317) 232-5923
Email: uccinfo@oucc.in.gov

Dated February 12, 2013.

Received On: February 15, 2013
IURC 30-DAY Filing No.: 3115
Indiana Utility Regulatory Commission

RATE REP
RENEWABLE ENERGY PRODUCTION

AVAILABILITY:
Voluntary offer available to (1) any Customer of Indianapolis Power & Light Company (the "Company") (2) or any Bidder in the Company's reverse auction (the "Reverse Auction") that operates within the Company's service territory a Qualifying Renewable Energy Power Production Facility subject to the Company's rules and regulations and, any terms, conditions and restrictions imposed by any valid and applicable law or regulation and negotiates a written contract with the Company that is approved by the Commission before March 30, 2013. This tariff sets forth the cost levels eligible for retail ratemaking purposes and is submitted pursuant to the requirements of the Commission and shall cease to be effective if such regulations are set aside, withdrawn or for any reason cease to be applicable to the Company. An Existing Qualifying Renewable Energy Power Production Facility is eligible to offer electricity to the Company under this Rate REP except as otherwise expressly forbidden by law.

DEFINITIONS:

(a) Qualifying Renewable Energy Power Production Facility (the "Facility") means an arrangement of equipment for the production of electricity with capacity no less than 50 kW (20 kW for solar) and no greater than 10 MW. The expected annual output from any project shall not exceed the annual consumption of the Host Facility, except in the case of Facilities that utilize Biomass or are providing the power in response to the Reverse Auction. The Facility shall be a QF or otherwise authorized by Federal law to make wholesale power sales. Except in the case of a Facility operated by a Bidder, the Facility shall be located at a Host Facility owned by a Customer and shall be located wholly within the boundaries of the Host Facility. A Host Facility shall be a building, production equipment or collection of same in the same area such as a campus located at one site and is not the aggregation of more than one site each less than 50 kW (20 kW for solar). The Host Facility or portion of the Host Facility on which the Facility is located must be wholly within the boundaries of the Company's service territory. The Facility of a Bidder must also be wholly within the boundaries of the Company's service territory. A Facility must produce electric power through the use of 100% renewable resources or fuel. Such resources or fuels include:
   a. Solar photovoltaic cells and panels
   b. Wind
   c. Dedicated crops grown for energy production
   d. Organic waste biomass
   e. Biomass will be consistent with the State's definition in IC 8-1-37-4(a)(5).

(b) Purchase means the purchase of electric energy or capacity or both from the Facility by the Company and is also inclusive of all Environmental Attributes.

(c) Sale means the sale of electric energy or capacity or both by the Facility to the Company and is also inclusive of all environmental attributes.

(d) Environmental Attributes means Renewable Energy Credits ("REC"), carbon credits, greenhouse gas offsets or any other environmental credit, commodity or classification that may be associated with the production of renewable energy from the Facility.

(e) Interconnection Costs means the reasonable costs of connection, switching, metering, transmission, distribution, safety provisions, and administrative costs incurred by the Company directly related to the installation and maintenance of the physical facilities necessary to permit interconnected operations with a Facility, to the extent such costs are in excess of the corresponding costs which the Company would have incurred if it had not engaged in interconnected operations, but instead generated an equivalent amount of electric energy itself or Purchased an equivalent amount of electric energy or capacity from other sources.

ISSUED PURSUANT TO
44018
INDIANA UTILITY REGULATORY COMMISSION

Received On: February 15, 2013
IURC 30-DAY Filing No.: 3115
Indiana Utility Regulatory Commission

RATE REP (Continued)

Interconnection Costs do not include any costs included in the calculation of Avoided Costs.

(f) System Emergency means a condition on the Company's system which is liable to result in imminent significant disruption of service to Customers or in substantial deviation from normal service standards or which is imminently liable to endanger life or property.

(g) Commission means the Indiana Utility Regulatory Commission.

(h) FERC means Federal Energy Regulatory Commission.

(i) Peak Period means the time between 6 a.m. and 10 p.m. (April through September) or between 7 a.m. and 11 p.m. (October through March) on all days except Saturdays and Sundays, which daily time period will be subject to change from time to time at the Company's option. This change would occur after no less than ten (10) days notice has been given to all Customers who would be affected, and to the Commission.

(j) Off Peak Period means the time not included in the Peak Period.

(k) QF means a Facility qualifying as a qualifying small power production facility pursuant to 16 U.S.C. § 796(17)(C).

(l) Bidder means a participant in the Reverse Auction whose proposed Sale of energy from a Facility to the Company is accepted by Company and results in the execution of an approved agreement for a Sale no later than January 30, 2013.

PURCHASE AND SALE:

Purchases and Sales shall also be subject to the following general terms and conditions:

a. The Company shall not be obligated to Purchase or sell at a time of System Emergency.
b. The Customer or Bidder shall sell the total production of the Facility to the Company.
c. The Customer or Bidder shall receive service for their load at the appropriate retail rate from the Company. The applicable rate is not impacted by the Customer's participation in Rate REP.
d. The Company will not offer contracts to any additional Customers if that additional contract would result in the projected energy purchased under Rate REP (inclusive of the Reverse Auction) in a given year exceeding 153,000 MWh/year (the "Cap"). The Company shall set aside 45,900 MWh/year of the Cap to be available for Bidders in the Reverse Auction, provided that nothing herein shall be construed as requiring the Company to secure 45,900 MWh/year through the Reverse Auction. Upon completion of the Reverse Auction, any remaining portion shall be offered to Customers.
e. The Company may recognize the costs of the Purchase for retail ratemaking purposes.

INTERCONNECTION CONDITIONS AND COSTS:

(a) The Company, subject to prior compliance by the Facility with all applicable Federal and State laws and regulations, shall make parallel interconnection with the Facility in such a way as to accomplish Purchases and Sales as described in Sections (b) through (f).

(b) The Facility shall comply with the National Electrical Safety Code, as supplemented, the applicable requirements of 170 IAC 4-4.3, and the Company's rules and regulations for electric service.

(c) Interconnection Costs from the Facility to the Company's distribution or transmission system, including those costs of (d) and (e) below, shall be borne by the Facility. If a Customer is contracting with third-parties to own and operate the Facility, both the third-party and the Customer will be responsible for and [illegible] interconnection agreement. The Customer will be responsible in the event of a default by the third-party. There shall be no obligation on the Company to finance such interconnection.

ISSUED PURSUANT TO
44018
INDIANA UTILITY REGULATORY COMMISSION

Received On: February 15, 2013
IURC 30-DAY Filing No.: 3115
Indiana Utility Regulatory Commission

RATE REP (Continued)

(d) The Facility shall install, operate, and maintain in good order such relays, locks and seals, breakers, automatic synchronizer, and other control and protective apparatus as shall be designated by the Company for operation parallel to its system. The Facility shall bear full responsibility for the installation and safe operation of this equipment.

(e) Breakers capable of isolating the Facility from the Company shall at all times be immediately accessible to the Company. The Company may isolate the Facility at its own discretion if the Company believes continued parallel operation with the Facility creates or contributes to a System Emergency. System Emergencies causing discontinuance of parallel operation are subject to verification by the Commission.

(f) To properly record numbers of kilowatt-hours for, respectively, Purchase and Sale, the following configurations shall be the basis for metering.

(1) Where such measurement is appropriate for measurement of energy, the circuit shall include at minimum one monodirectional meter between, at one side, the Company system and, on the other side, the load and a bidirectional meter between, at one side, the Company system and on the other side, the Facility and any load associated with it

(2) Where such measurement is appropriate for measurement of energy, the circuit shall include a monodirectional meter between the on-site load and the Company and, in a series arrangement, two monodirectional meters between the Facility and the Company system:

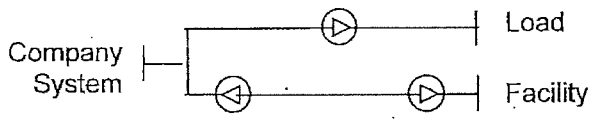

(3) The meter measuring Purchases by the Company shall be of a design to record time periods, and shall be capable of electronically transmitting instantaneous readings.

(4) Other metering arrangements shall be the subject of negotiations between the Company and the Customer or Bidder.

RATE REP PURCHASE RATES:

The rate the Company will pay each Customer for energy and capacity Purchased from their Facility will be established in advance by written contract with the Company. Unless otherwise agreed and approved by the Commission the RATE REP PURCHASE RATES eligible for retail ratemaking purposes shall not exceed:

(a)	Solar		
	a. Capacity	None	
	b. Energy		
	(a)	For Facilities generating 20 kW to 100 kW:	24.0¢ per KWH
	(b)	For Facilities generating more than 100 kW:	20.0¢ per KWH
(b)	Wind		
	a. Capacity	None	
	b. Energy		
	(a)	For Facilities generating 50 kW to 100 kW:	14.0¢ per KWH
	(b)	For Facilities generating 100 kW to 1 MW:	10.5¢ per KWH
	(c)	For Facilities generating more than 1 MW:	7.5¢ per KWH

ISSUED PURSUANT TO
44018
INDIANA UTILITY REGULATORY COMMISSION

Received On: February 15, 2013
IURC 30-DAY Filing No.: 3115
Indiana Utility Regulatory Commission

RATE REP (Continued)

(c) Biomass

a. Capacity	$6.18 per KW per month
b. Energy	8.5¢ per KWH

The length of any contract shall not exceed fifteen (15) years. The Company and the Customer or Bidder may negotiate terms and a rate for energy or capacity in recognition of the following factors:

(1) The extent to which scheduled outages of the Facility can be usefully coordinated with scheduled outages of the Company's generation facilities;
(2) The relationship of the availability of energy from the Facility to the ability of the Company to avoid costs, particularly as is evidenced by the Company's ability to dispatch the Facility;
(3) The usefulness of the Facility during System Emergencies, including the ability of the Facility to separate its load from its generation;
(4) The impact of improvements in costs or performance of technologies, tax credits, grants and other financial incentives that when combined with the rate would produce excessive profits for the Facility.
(5) Rates and adjustments prescribed in the contract shall remain in effect notwithstanding changes made to the RATE REP PURCHASE RATES from time to time.
(6) The extent to which the Company is authorized to recognize the cost of such Purchase for retail ratemaking purposes pursuant to Ind. Code § 8-1-8.8-1 *et. seq.*

Prior to finalizing the contract, the Company shall seek approval via the IURC's 30-day administrative filing process to recognize the costs of such Purchase for retail ratemaking purposes pursuant to Ind. Code § 8-1-8.8-1 *et. seq.*

RATES FOR SALE BY COMPANY:
Back-up Power may be provided under Standard Contract Rider No. 10. Maintenance Power shall be provided under Standard Contract Rider No. 11. Supplementary Power shall be provided under Standard Contract Rider No. 12. A Customer or Bidder may not simultaneously qualify for Rate REP, Rate CGS Cogeneration and Small Power Production, Standard Contract Rider No. 9, Net Metering, and Standard Contract Rider No. 8 for off-peak service.

STANDARD CONTRACT RIDERS APPLICABLE:

No. 1	see Page 150
No. 10	see Page 162
No. 11	see Page 163
No. 12	see Page 164

ISSUED PURSUANT TO
44018
INDIANA UTILITY REGULATORY COMMISSION