ISPLS 61st Annual Convention

January 16-18, 2013

Indianapolis

Denise H. Wright
Training Officer

Indiana State
Department of Health
Environmental Public Health Division

Alan M. Dunn
Sr. Environmental Manager

AN OVERVIEW OF THE ONSITE TREATMENT TRAIN

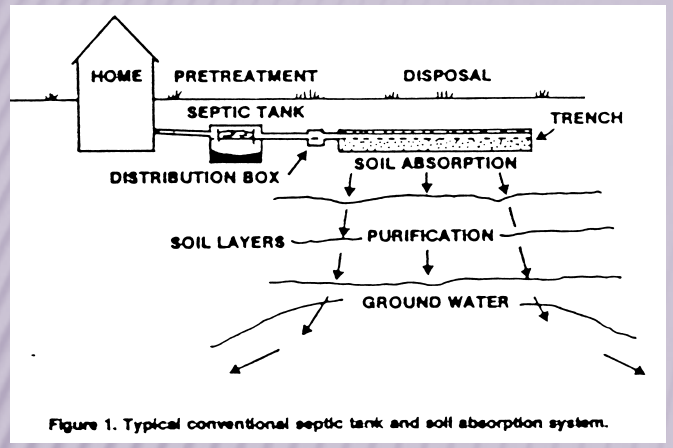

Figure 1. Typical conventional septic tank and soil absorption system.

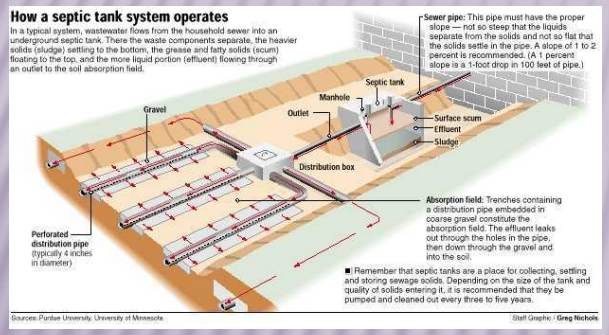

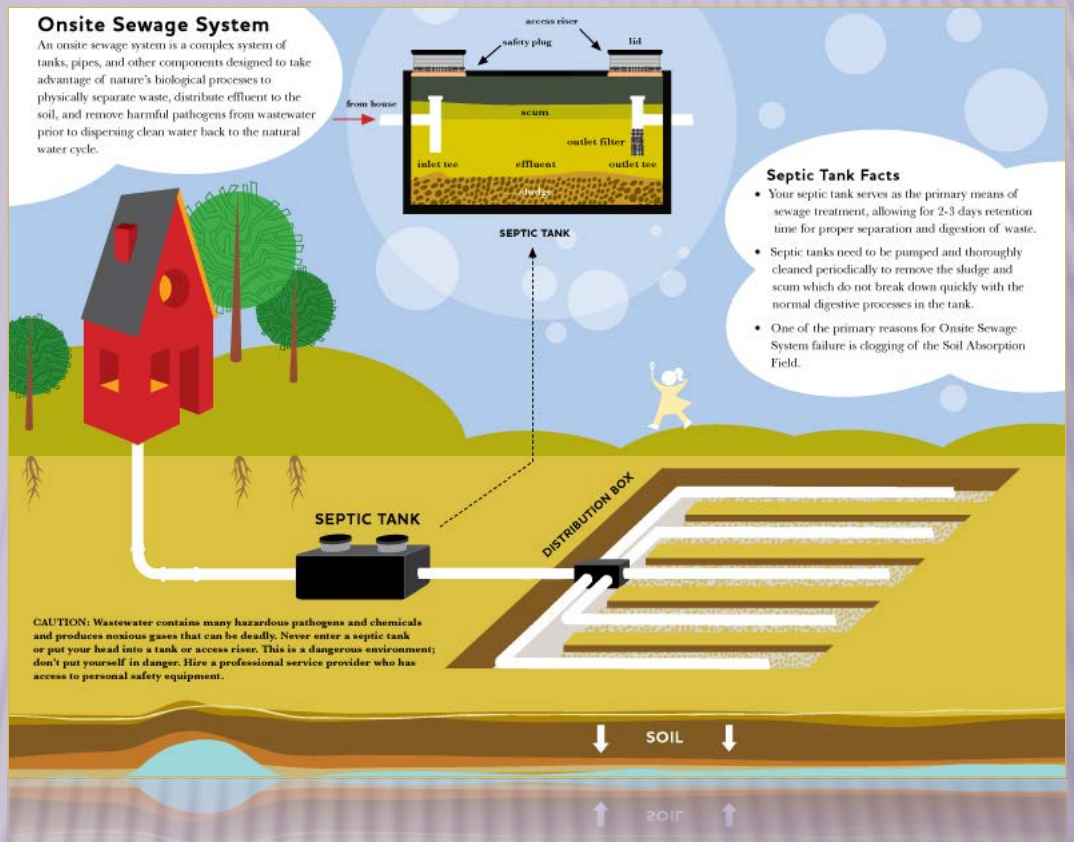

RESIDENTIAL ONSITE SEWAGE SYSTEM

Component Description, Function and Material Specification

- Piping
- Septic Tank
- Dosing Tank
- Distribution Box
- Soil Absorption Field Technologies
- Alternate Methods & Technologies

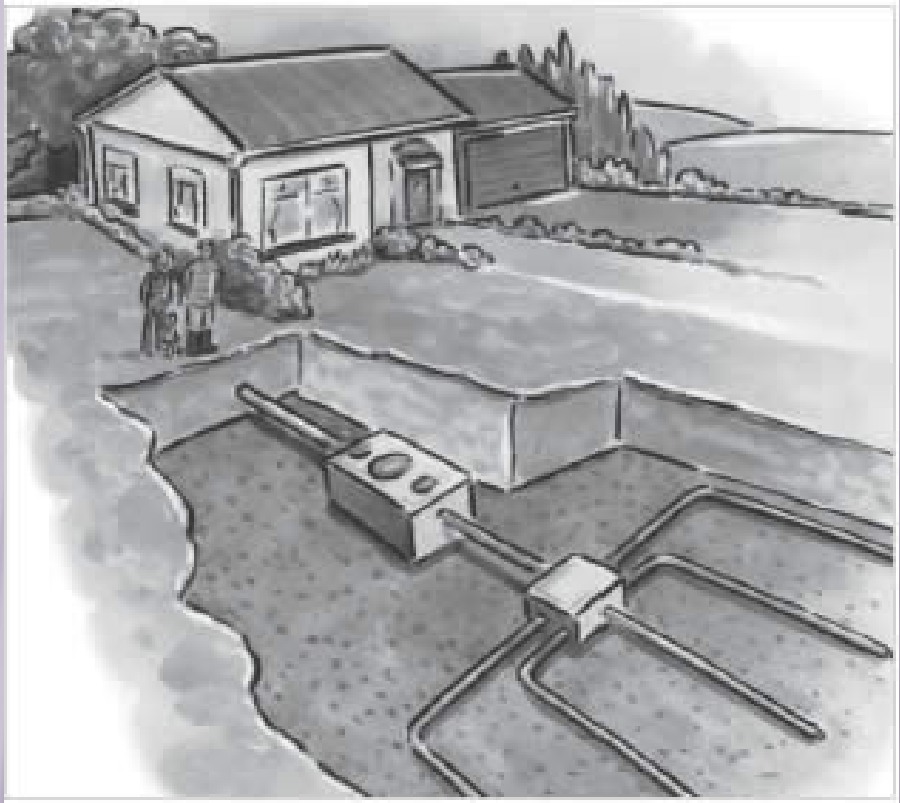

RESIDENTIAL ONSITE SEWAGE SYSTEM COMPONENTS

FLOOD DOSED: DOSING TANK

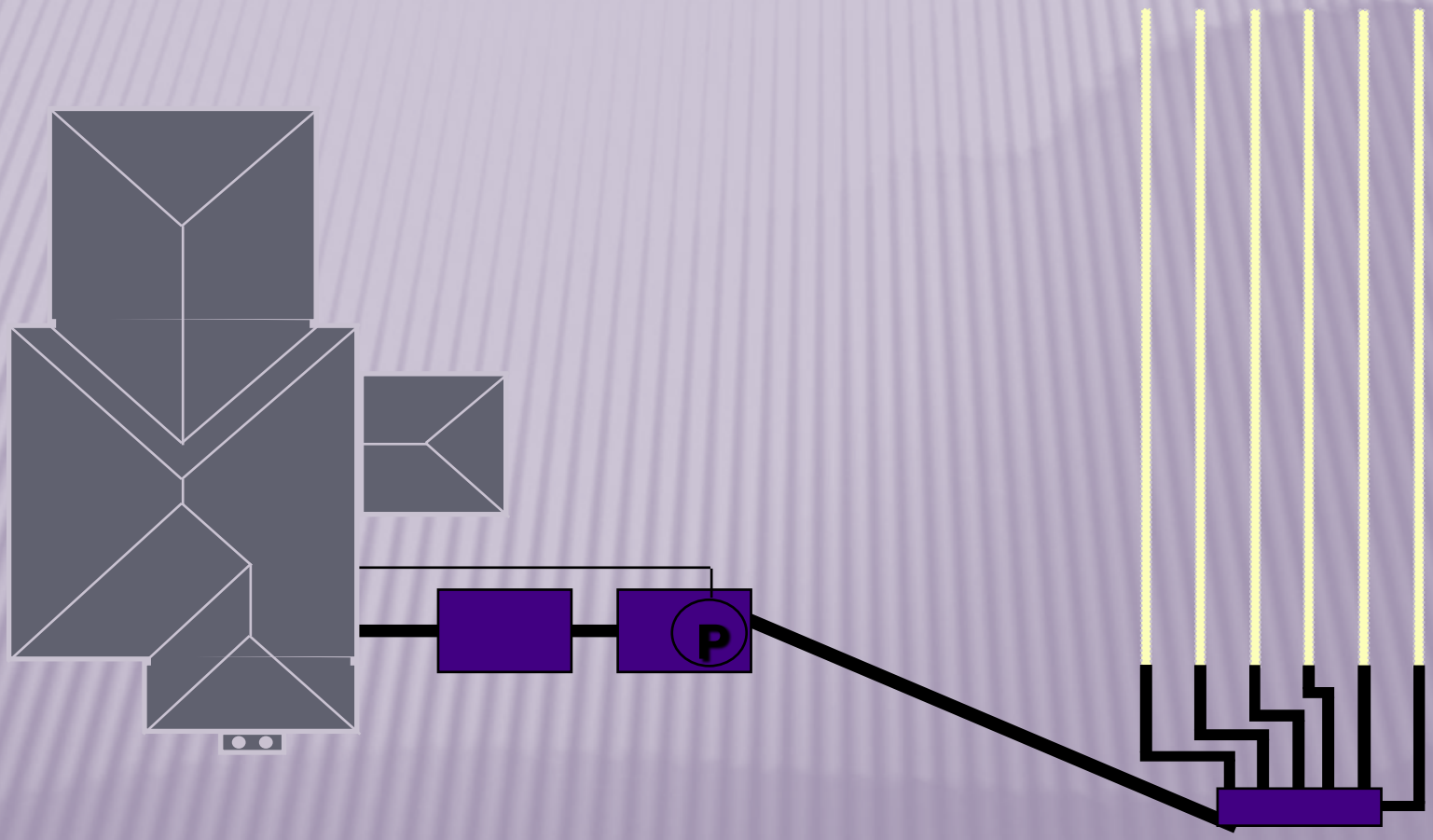

Pumping Uphill

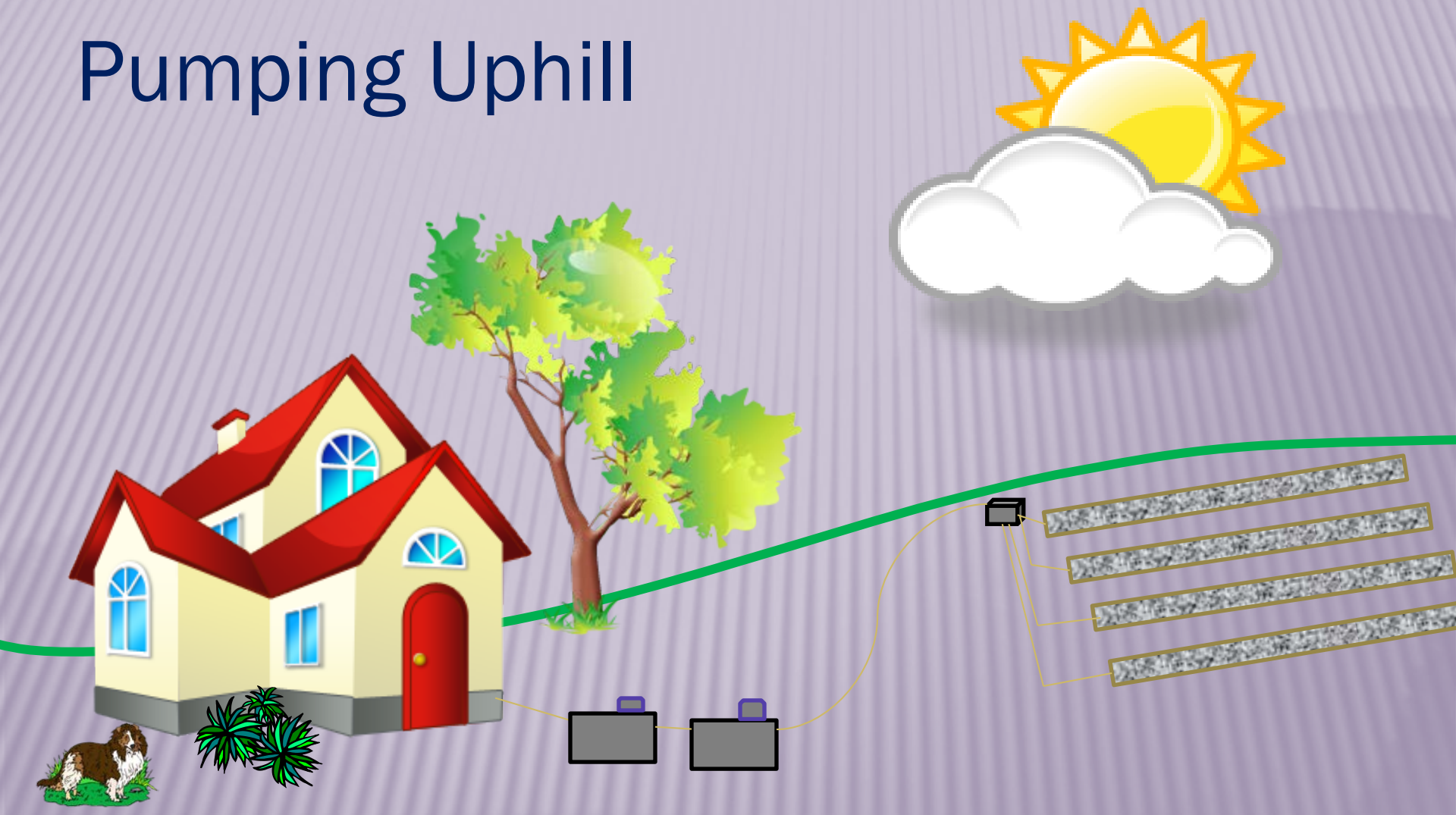

SOIL ABSORPTION TRENCH

- Aggregate/Chambers
- Piping
- Barrier Material

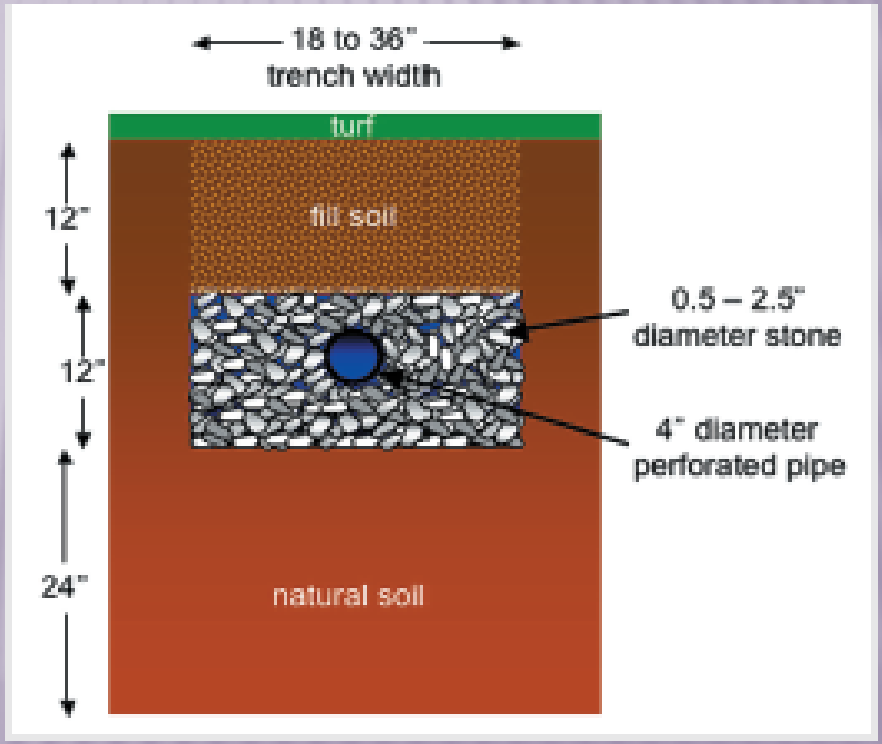

Section 67

PIPING-DESCRIPTION

- Gravity Sewer Pipe
- Gravity Effluent Sewer Pipe
- Pressure Sewer
- Effluent Force Main
- Manifold
- Pressure Distribution Laterals
- Gravity Distribution Laterals
- Subsurface Drainage

Section 67

PIPING-FUNCTION

Conveyance and Distribution

- Gravity Sewer Pipe
- Gravity Effluent Sew
  Pipe
- Pres
  Force Main
  Manifold
- Pressure Distribution
  Laterals
- Gravity Distribution
  Laterals
- Subsurface Drainage

PIPING-SPECS

- Gravity Sewer
- Gravity Effluent Sewer

ASTM D 2665-12
(Schedule 40 PVC)

ABS:
ASTM D 2661-11

PIPING-SPECS

- Gravity Sewer
- Gravity Effluent Sewer

ASTM D 3034-08

PIPING-SPECS

- Gravity Sewer
- Gravity Effluent Sewer

ASTM D 3034-08
(w/ compression fittings)

PIPING-SPECS

- Pressure Sewer
- Effluent Force Main
- Manifold
- Pressure Distribution Laterals

ASTM D 2241-09 (SDR 17) W Compression Fittings

PIPING-SPECS

- Soil Absorption System
- Gravity Distribution Laterals

ASTM D 2729-11

PIPING-SPECS

•Subsurface Drainage System Pipe (w/ geotextile wrapping and w/out)

ASTM F 405-05

SEPTIC TANK

- Description
  - 1 or 2 compartment
  - ≥ 2 day detention time for tank capacity
  - All wastewater generated within the home directed to the ST
  - Accessible for maintenance
  - Watertight

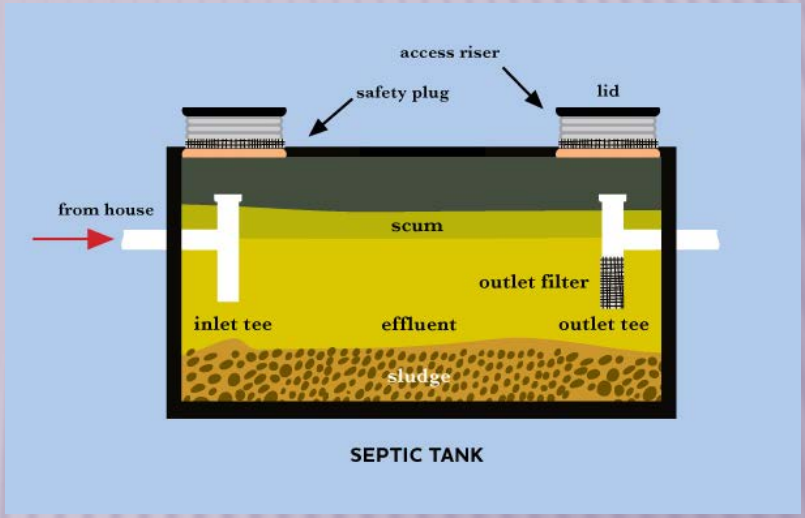

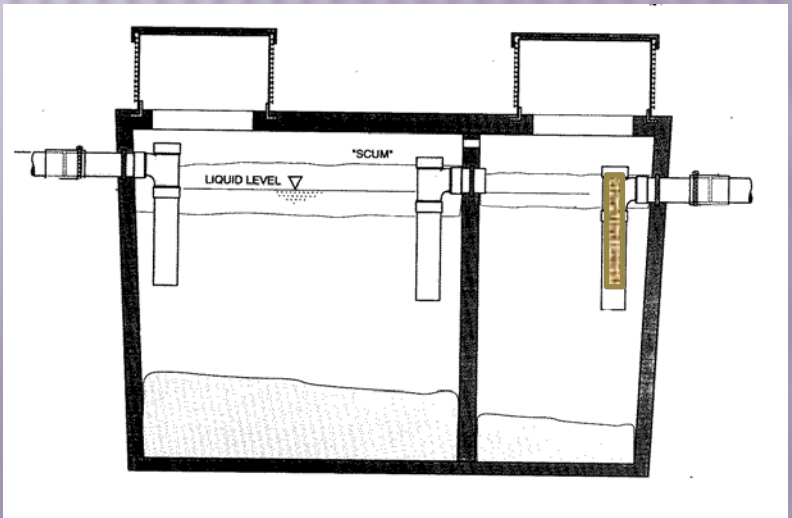

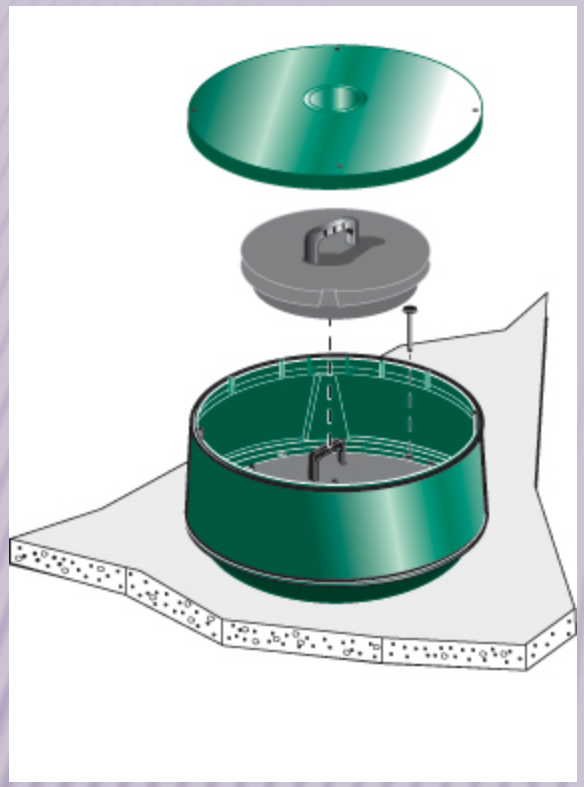

SEPTIC TANK

Watertight

SEPTIC TANK

- Description
- Function
  - Physical separation of sewage (FOG, Effluent & Sludge)
  - Anaerobic decomposition
  - Attenuate surges
  - Ventilation
- Material Specs

SEPTIC TANK- MATERIAL SPECS

Concrete, Fiberglass, Polyethylene or Polypropylene

DOSING TANK - DESCRIPTION

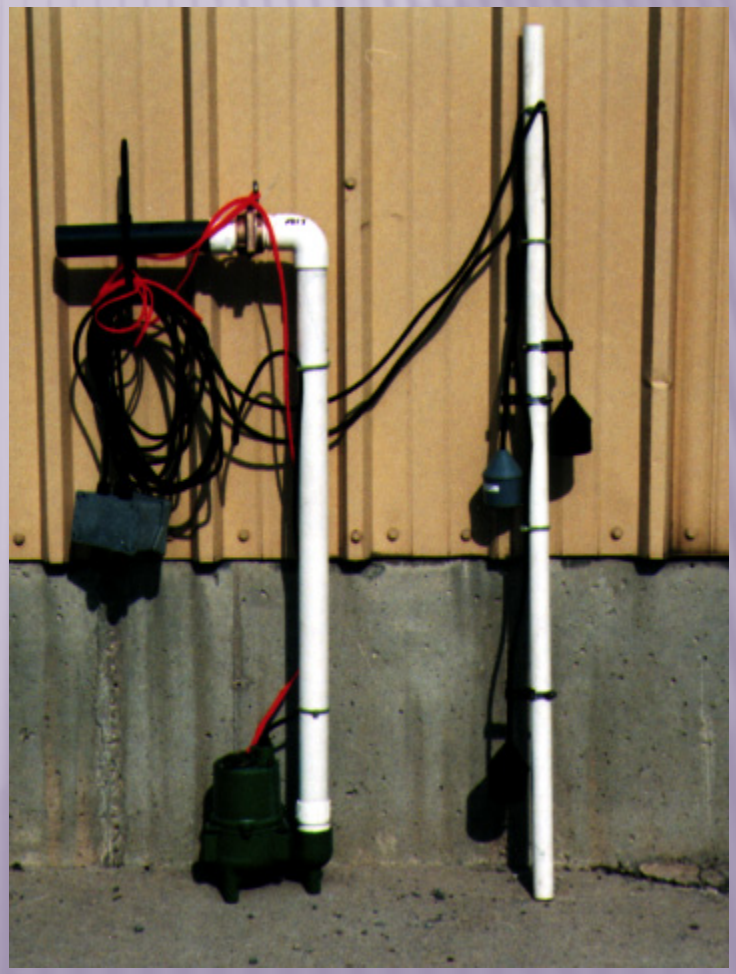

DISTRIBUTION BOX- DESCRIPTION

Component used to provide proportionate loading of effluent to the soil absorption trenches.

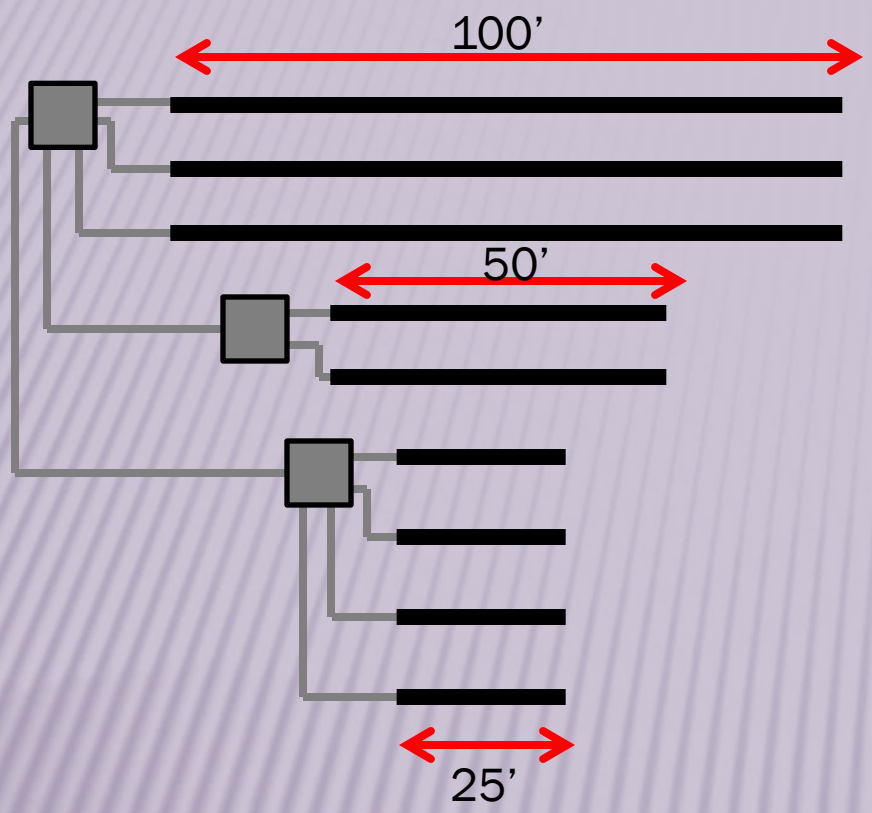

DISTRIBUTION BOX- FUNCTION

Proportionally split the flow to the soil absorption field trenches. Each trench must be directed connected to a d. box.

VARY TRENCH LENGTHS

MULTIPLE D-BOXES

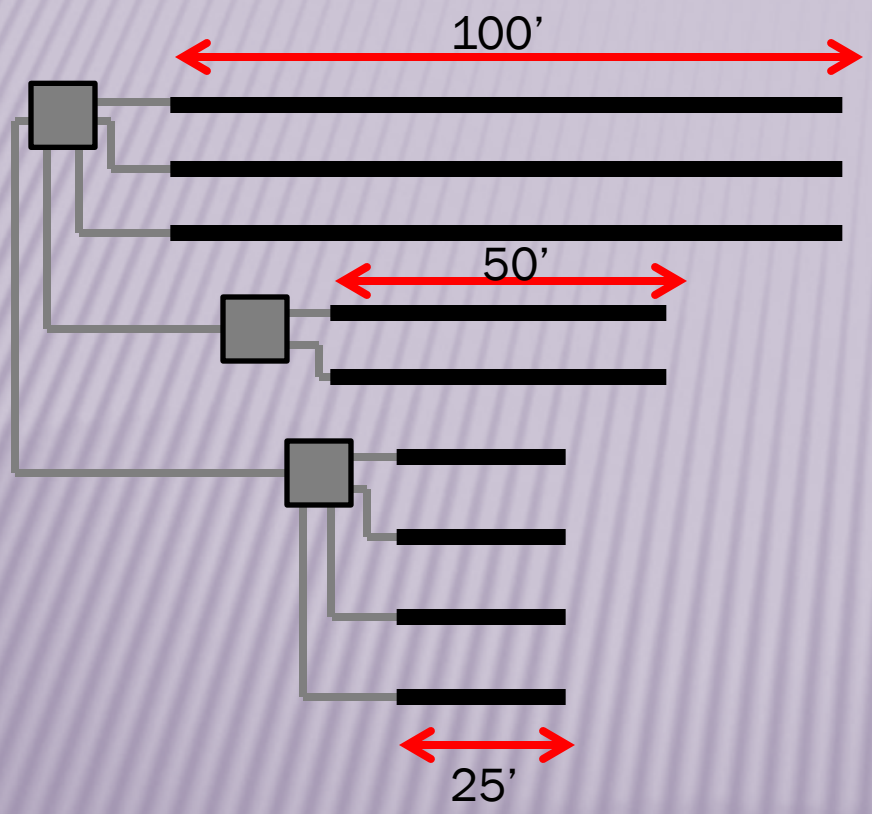

SPIDER VALVE OR PRESSURE MANIFOLD

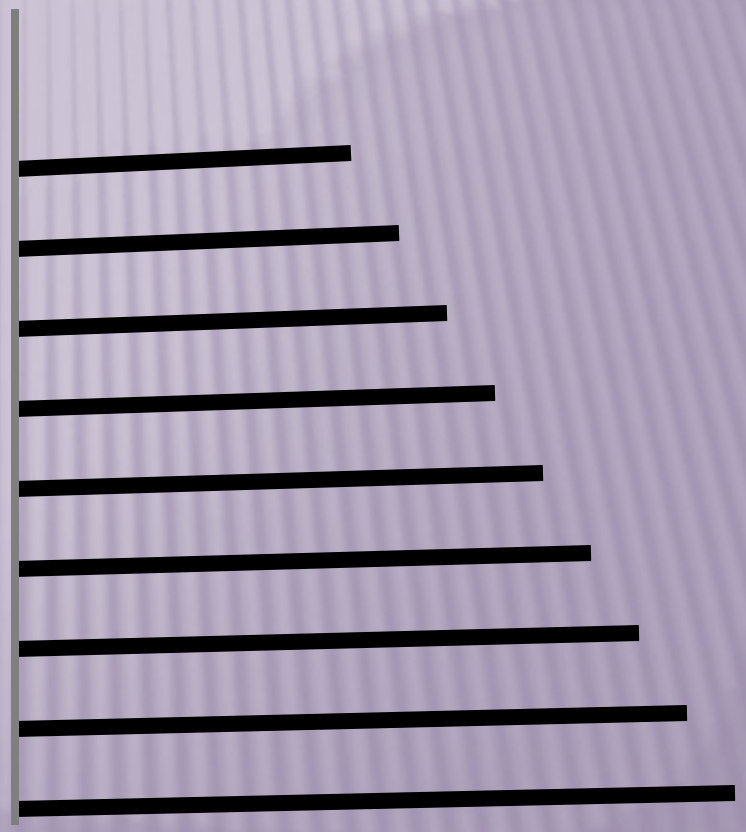

DISTRIBUTION BOX – MATERIAL SPECS

Concrete (Other approved materials)

SOIL ABSORPTION FIELD TECHNOLOGIES: SUBSURFACE TRENCHES

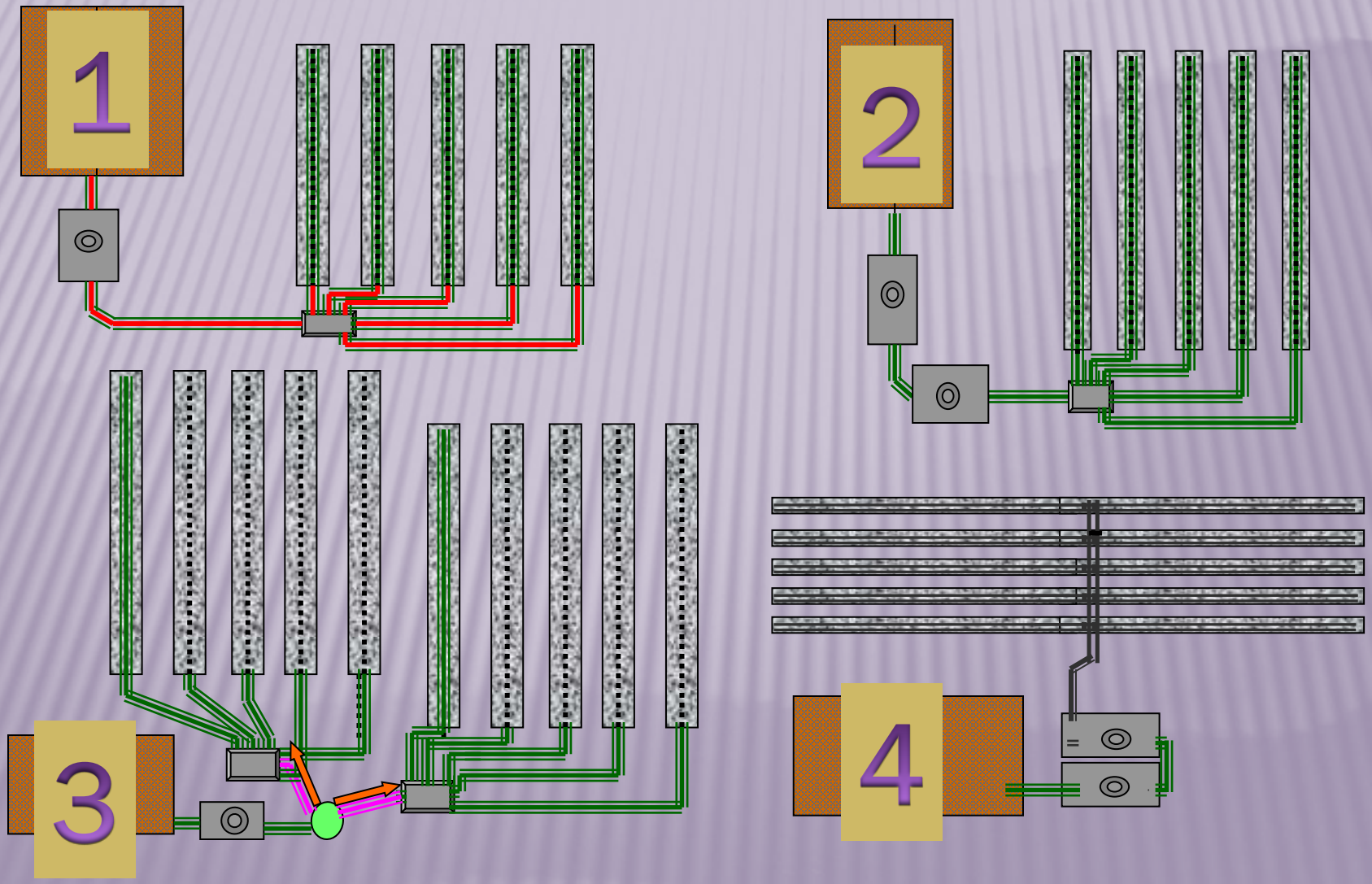

Section 73

ONSITE SEWAGE SYSTEM SELECTION

- Table VI: OSS selection based on requirements of 410 IAC 6-8.3

410 IAC 6-8.3-73 Table for onsite sewage system selection

Sec. 73. Onsite sewage system selection may be summarized in Table VI as follows:

Table VI - Table for Onsite Sewage System Selection based on requirements of 410 IAC 6-8.3

Site Requirements	Subsurface Trench Onsite Sewage Systems					Elevated Sand Mound Onsite Sewage Systems (Sec. 72)
	Gravity Flow[1] (Sec. 70, 71)		Flood Dosing or Alt. Fields[1] (Sec. 70, 71)	Flood Dosing[1] (Sec. 70, 71)	Pressure Dist. (Sec. 70, 71)	
Slope	≤ 15%		≤ 15%	≤15%	≤15%	≤6%
Design Daily Flow	≥ 450	< 450	Any	Any	Any	Any
Acceptable Loading Rate Range for determining system size	≥ 0.25 ≤ 0.75	≥ 0.25 ≤ 0.75	≥ 0.25 ≤ 0.75	≥ 0.25 ≤ 0.75	≥ 0.25 ≤ 1.20	≥ 0.25 ≤ 1.20
Distance from Trench Bottom (ground surface for mounds) to Layer with a Soil Loading Rate < 0.25 gpd/ft^2	≥ 30	≥ 24	≥ 24	≥ 24	≥ 24	≥ 20
Distance from Trench Bottom (ground surface for mounds) to Layer with a Soil Loading Rate > 1.20 gpd/ft^2	≥ 24	≥ 24	≥ 24	≥ 24	≥ 24	≥ 20
Distance from Trench Bottom (ground surface for mounds) to Layer with a Soil Loading Rate = 1.20 gpd/ft^2	≥ 24	≥ 24	≥ 24	≥ 24	Press. Dist. required for SLR = 1.20	≥ 0
Distance from Trench Bottom (ground surface for mounds) to a Soil Horizon Developed from Wisconsin Glacial Till That Shows Effervescence[3]	≥ 30	≥ 24	≥ 24	≥ 24	≥ 24	≥ 20
Distance from Trench Bottom (ground surface for mounds) to Soil Horizon with < 20% Clay and > 35% Coarse Fragments by Volume	≥ 30	≥ 24	≥ 24	≥ 24	≥ 24	≥ 20
Distance from Trench Bottom (ground surface for mounds) to Soil Horizon with > 20% Clay and > 60% Coarse Fragments by Volume	≥ 30	≥ 24	≥ 24	≥ 24	≥ 24	≥ 20
Distance from Trench Bottom (ground surface for mounds) to Seasonal High Water Table[2]	≥ 24	≥ 24	≥ 24	≥ 24	≥ 24	≥ 20
Total Lineal Feet of Trench	≤ 500	≤ 500	≤ 500 for Alt. Fields	Any	Any	N/A

[1]These conditions are also suitable for subsurface trench pressure distribution onsite sewage systems.

[2]For subsurface trench systems, if the distance from trench bottom to seasonal high water table is less than twenty-four (24) inches, drainage must be installed in accordance with section 59 of this rule. For elevated sand mound systems, if the depth of the seasonal high water table is less than twenty (20) inches below the ground surface, drainage must be installed in accordance with section 59 of this rule.

[3]See Sections 58(a)(2)(E), 70(b)(6), 71(b)(3)(B), 71(c)(3)(B), 71(d)(2)(B) and 72(b)(5).

This chart does not include considerations such as the specific landscape features that must be met, the size of the soil absorption system, the size of the area necessary for construction of the soil absorption system on the contour with necessary setback and

DOSING TANK

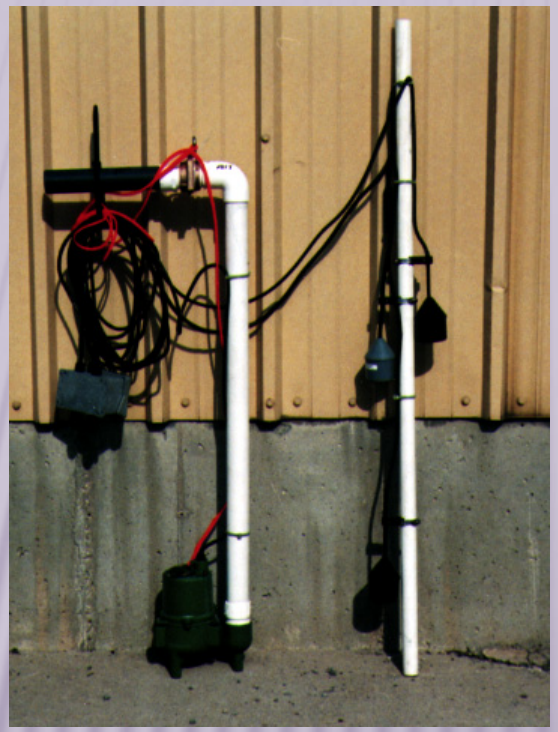

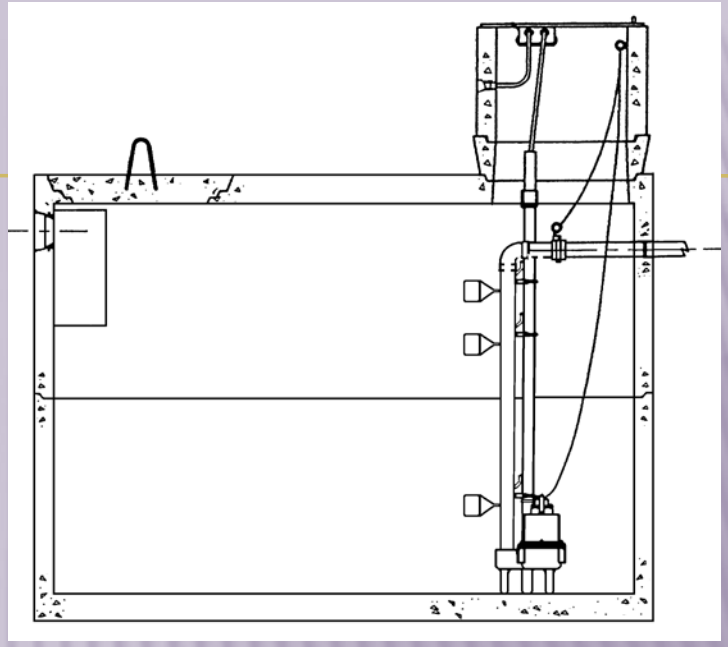

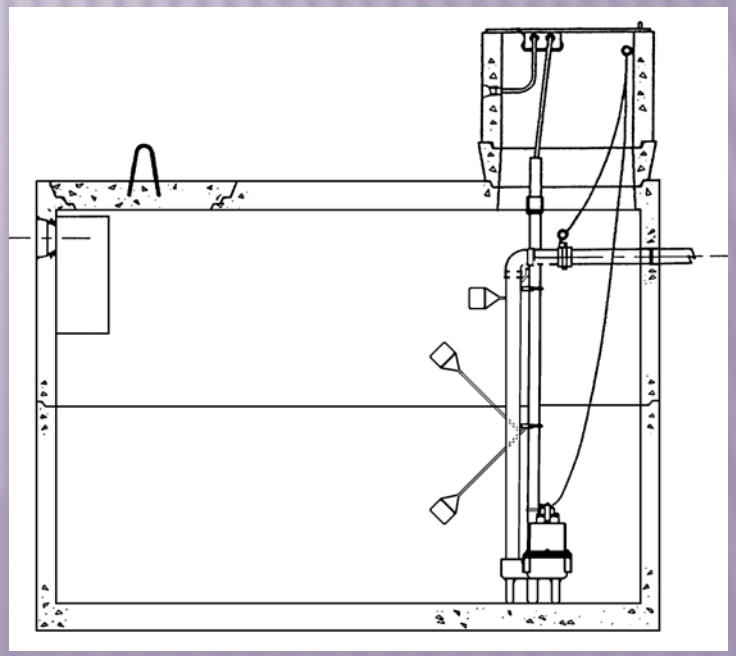

DOSING TANK

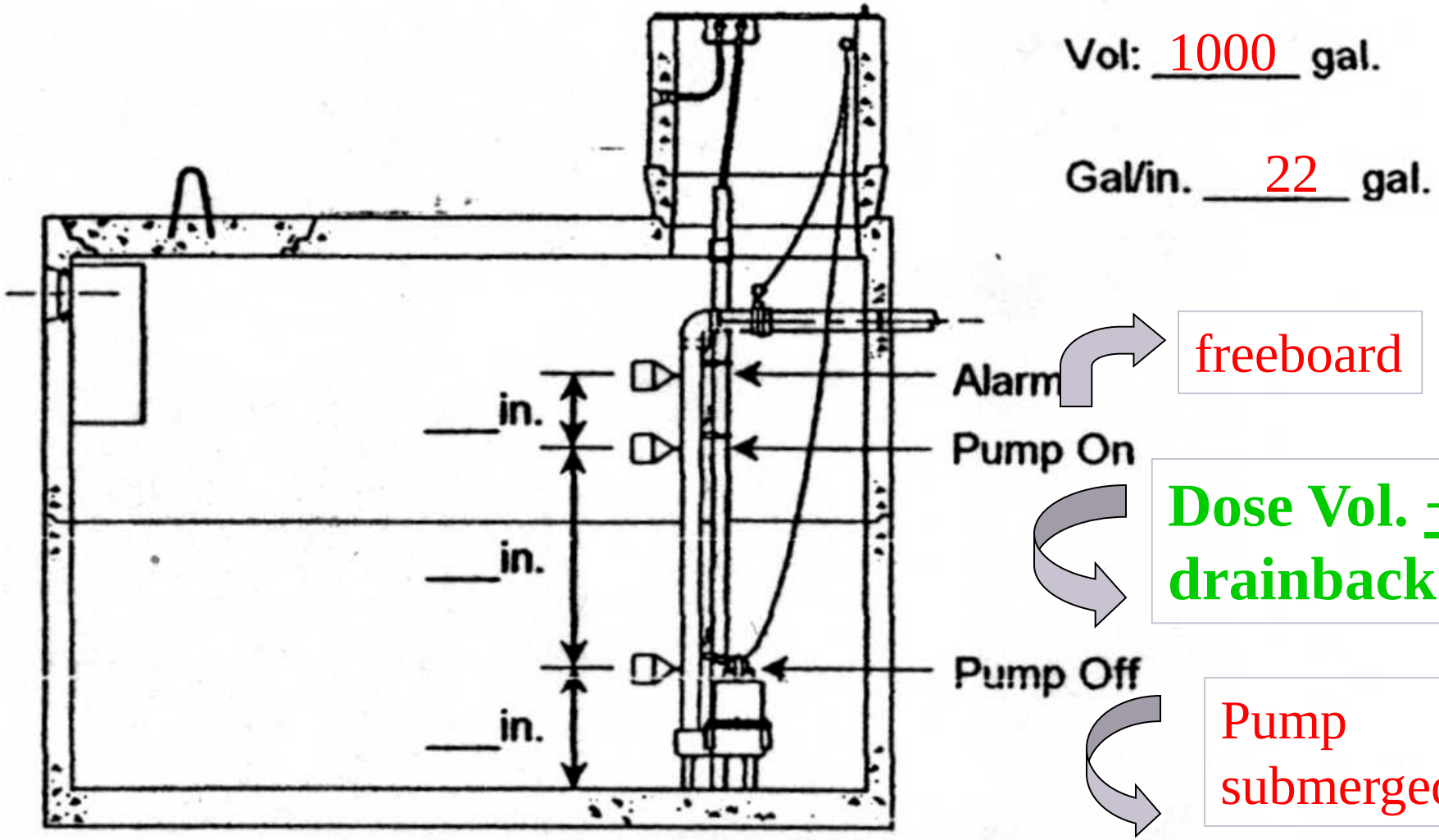

Dose Tank: Three Control Floats

PUMP SIZING: WHAT YOU NEED TO KNOW

- Number of bedrooms in home (DDF)
- Type of system (Flood Dosed or Pressure Dist)
- Length of effluent force main
- Diameter of effluent force main
- Elevation at “Pump Off” position
- Elevation at highest point in the effluent force main (D-Box? or Manifold?)

INFORMATION YOU NEED TO HAVE

- Friction Loss Chart (Table IX)
- Equivalent Length of Pipe Chart (Table X)
- Pump Information (from your pump supplier)
  - Manufacturer
  - Model
  - Pump Performance Curve

WHAT DOES THE SYSTEM DEMAND?

Required Effluent Pump Discharge Rates For Flood Dosed Trench Systems

[Table VII in Rule 410 IAC 6-8.3-76(b)]

Table VII	
Required Effluent Pump Discharge Rates for Flood Dosed Systems	
Number of Bedrooms	Discharge Rate in gpm
1	30
2	30
3	30-45
4	30-60
5	38-75
6	45-90

UNDERSTANDING A PUMP CURVE
- AN ESTIMATE OF PUMP FUNCTION

At 25' of Total Dynamic Head....

The pump performs anywhere along this curve

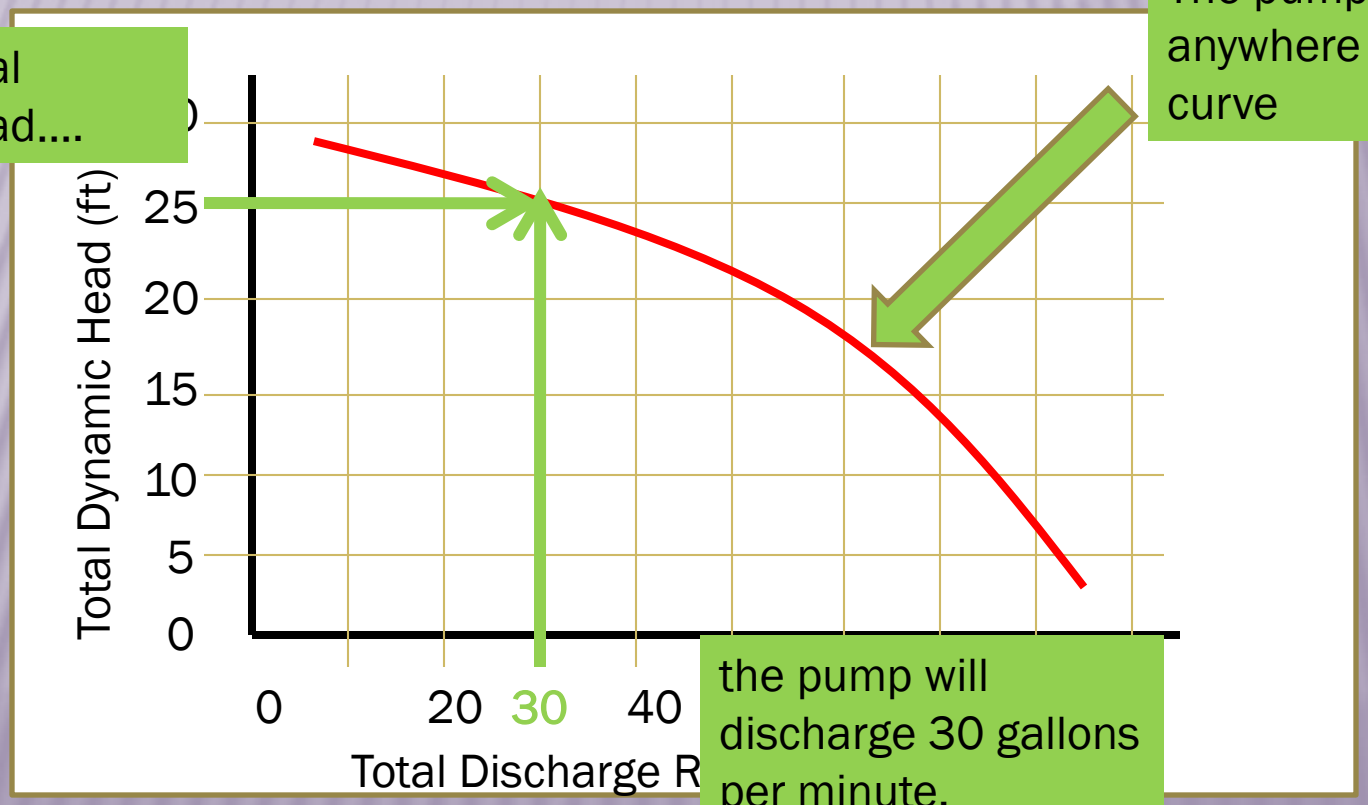

the pump will discharge 30 gallons per minute.

UNDERSTANDING A PUMP CURVE
- AN ESTIMATE OF PUMP FUNCTION

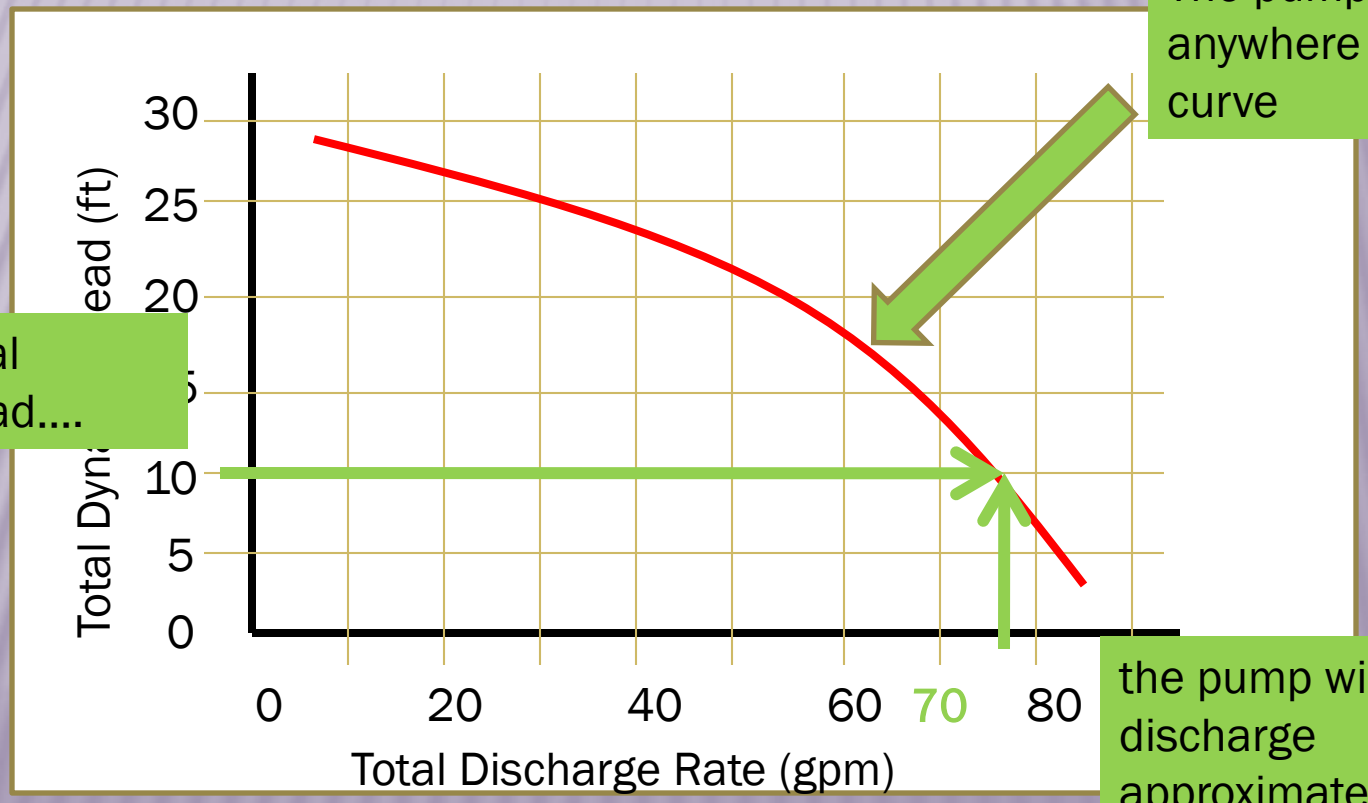

The pump performs anywhere along this curve

At 10' of Total Dynamic Head....

the pump will discharge approximately 76 gallons per minute.

UNDERSTANDING A PUMP CURVE
- AN ESTIMATE OF PUMP FUNCTION

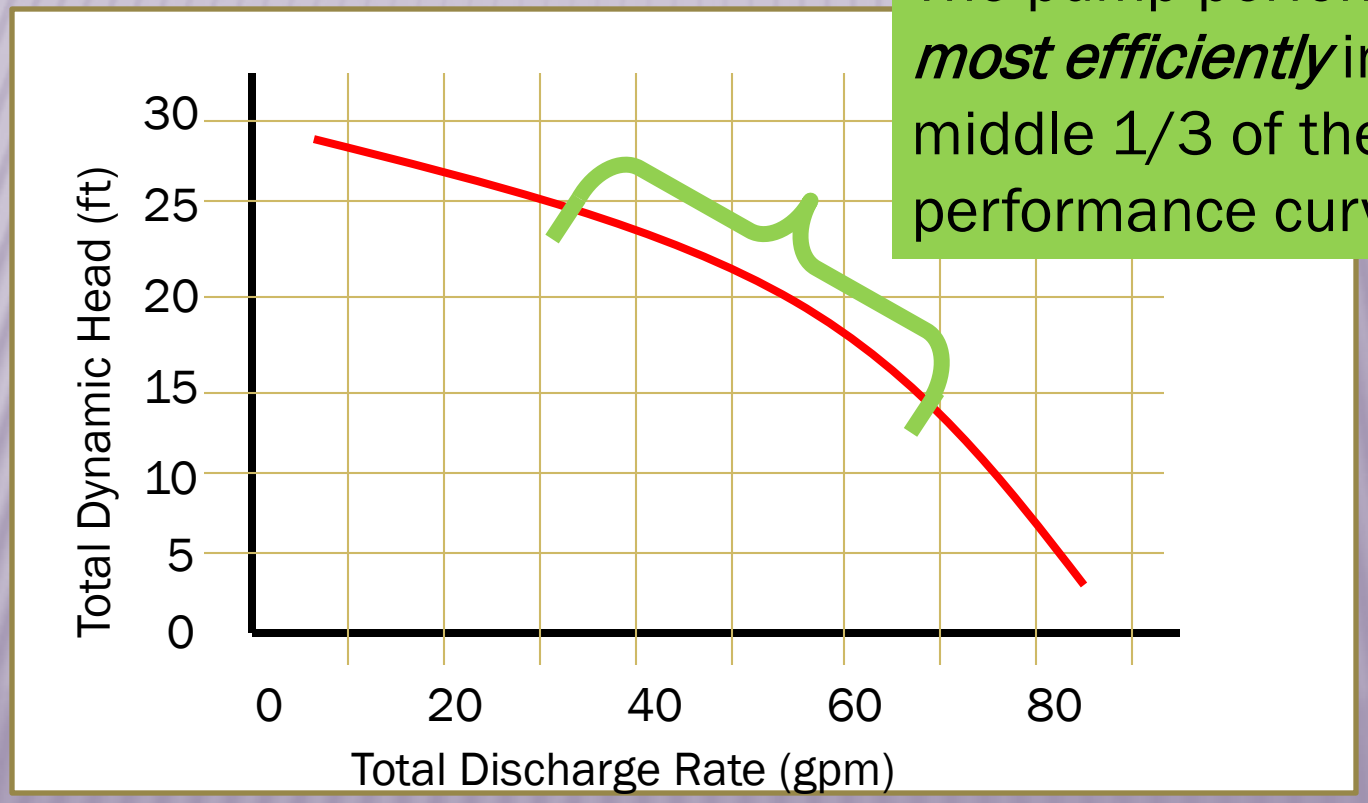

The pump performs ***most efficiently*** in the middle 1/3 of the performance curve

WHAT IS TOTAL DYNAMIC HEAD (TDH)

- It is the total force that works against the pump.
- It is a combination of 3 forces in an onsite sewage system
  - Static Head (a.k.a. static lift, lift, change in elevation)
  - Friction Loss Head
  - Design Head (Inline or Inline Residual Pressure)

STATIC HEAD

- WHERE DO I GET THAT?

Elevations preferred

From the Site Visit

Elevation at pump

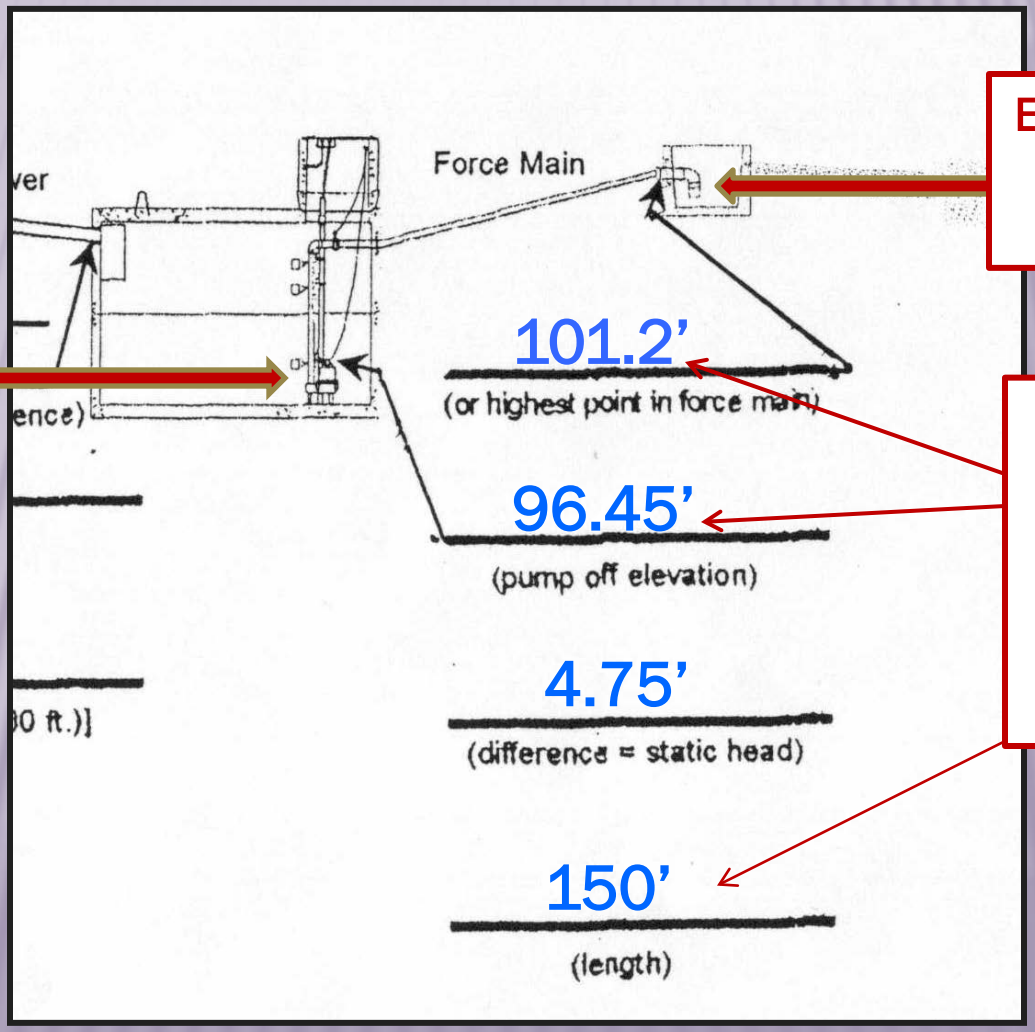

Elevation at highest point

These numbers should be included in the plan submittal

FRICTION LOSS HEAD

- The resistance to flow inside the pipe or resistance to a change in direction of flow.
- Or, the friction produced when the liquid flows through the pipe or around corners.
- **The larger the pipe diameter, the LESS friction loss.**
- **The smaller the pipe diameter, the GREATER the friction loss.**
- There is less resistance in a larger diameter pipe.

CALCULATING FRICTION LOSS

- You need
  - The length of the effluent force main
  - The number and types of fittings (couplings, elbows, etc.)
    - Equivalent Length of Pipe Chart (410 IAC 6-8.3 -76(h) Table X)
  - The diameter of the effluent force main
    - Friction Loss Chart (410 IAC 6-8.3 -76(h) Table IX)

THE "TOTAL" EFFLUENT FORCE MAIN LENGTH

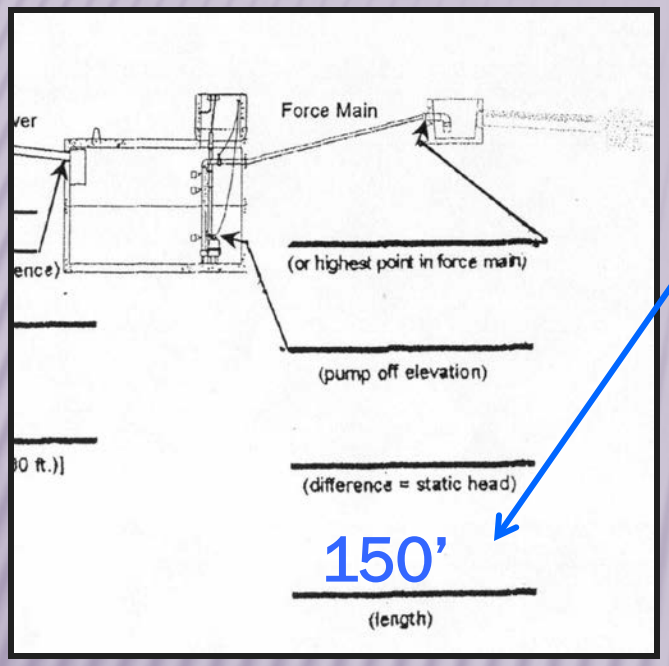

The effluent force main length is in the plan submittal, but that is typically just from the outlet of the dosing tank to the distribution box.

That does **not** account for the total length of the effluent force main for calculating friction loss!

CALCULATING FRICTION LOSS THAT'S NOT ALL!

- Every time there is a change in direction of flow (a.k.a. an elbow) or a coupling, there is an increase in friction loss!
- This is measured in "equivalent length of piping".
- There are charts that help you calculate equivalent length of piping.
  You must know…
  - The type of coupling or elbow
  - The diameter of the coupling or elbow

Section 76

EQUIVALENT PIPING CHART

Table X - Plastic Pipe Fittings: Friction Loss - Equivalent Length of Straight Pipe (ft.)*							
Fitting:	1"	1 1/4"	1 1/2"	2"	2 1/2"	3"	4"
90° elbow, standard sharp, inside radius	5.3	6.7	7.5	8.6	9.3	11.1	13.1
90° elbow, long sweep radius	2.5	3.8	4.0	5.7	6.9	7.9	12.0
45° elbow, standard	1.4	1.8	2.1	2.6	3.1	4.0	5.1
Tee Flow (run flow)	1.7	2.3	2.7	4.3	5.1	6.2	8.3
Tee Flow (branch flow)	6.0	7.0	8.0	12.0	15.0	16.0	22.0
Gate Valve	0.6	0.8	1.0	1.5	1.6	2.0	3.0
Male/Female adapter	2.0	2.8	3.5	4.5	5.5	6.5	9.0

*Assigned values. Other values for friction loss may be used if documentation from the pipe manufacturer is provided with the plan submittal.

TOTAL EFFLUENT FORCE MAIN LENGTH

- If you are using 2” pipe and the total effluent force main has one 90° elbow, you have to add 8.6’ or **9’** to the length of the effluent force main.

Table X - Plastic Pipe Fittings: Friction Loss - Equivalent Length of Straight Pipe (ft.)*							
Fitting:	1"	1 1/4"	1 1/2"	2"	2 1/2"	3"	4"
90° elbow, standard sharp, inside radius	5.3	6.7	7.5	8.6	9.3	11.1	13.1
90° elbow, long sweep radius	2.5	3.8	4.0	5.7	6.9	7.9	12.0
45° elbow, standard	1.4	1.8	2.1	2.6	3.1	4.0	5.1
Tee Flow (run flow)	1.7	2.3	2.7	4.3	5.1	6.2	8.3
Tee Flow (branch flow)	6.0	7.0	8.0	12.0	15.0	16.0	22.0
Gate Valve	0.6	0.8	1.0	1.5	1.6	2.0	3.0
Male/Female adapter	2.0	2.8	3.5	4.5	5.5	6.5	9.0

*Assigned values. Other values for friction loss may be used if documentation from the pipe manufacturer is provided with the plan submittal.

TOTAL EFFLUENT FORCE MAIN LENGTH

- If you are using 3” pipe and the total effluent force main has one 90° elbow, you have to add 11.1’ or 11’ to the length of the effluent force main.

Table X - Plastic Pipe Fittings: Friction Loss - Equivalent Length of Straight Pipe (ft.)*							
Fitting:	1"	1 1/4"	1 1/2"	2"	2 1/2"	3"	4"
90° elbow, standard sharp, inside radius	5.3	6.7	7.5	8.6	9.3	11.1	13.1
90° elbow, long sweep radius	2.5	3.8	4.0	5.7	6.9	7.9	12.0
45° elbow, standard	1.4	1.8	2.1	2.6	3.1	4.0	5.1
Tee Flow (run flow)	1.7	2.3	2.7	4.3	5.1	6.2	8.3
Tee Flow (branch flow)	6.0	7.0	8.0	12.0	15.0	16.0	22.0
Gate Valve	0.6	0.8	1.0	1.5	1.6	2.0	3.0
Male/Female adapter	2.0	2.8	3.5	4.5	5.5	6.5	9.0

*Assigned values. Other values for friction loss may be used if documentation from the pipe manufacturer is provided with the plan submittal.

TOTAL EFFLUENT FORCE MAIN LENGTH

- For multiple fittings, you add all of the equivalent lengths of piping to the length of the effluent force main.

Example

Effluent force main is 2”. The effluent force main has:

2 - 90° elbow 2x9’= 18’

6 - 45° elbows 6x3’= 18’

36’

Total effluent force main length is 150’ + 36’ = 186’

Table X - Plastic Pipe Fittings: Friction Loss - Equivalent Length of Straight Pipe (ft.)*							
Fitting:	1"	1 1/4"	1 1/2"	2"	2 1/2"	3"	4"
90° elbow, standard sharp, inside radius	5.3	6.7	7.5	8.6	9.3	11.1	13.1
90° elbow, long sweep radius	2.5	3.8	4.0	5.7	6.9	7.9	12.0
45° elbow, standard	1.4	1.8	2.1	2.6	3.1	4.0	5.1
Tee Flow (run flow)	1.7	2.3	2.7	4.3	5.1	6.2	8.3
Tee Flow (branch flow)	6.0	7.0	8.0	12.0	15.0	16.0	22.0
Gate Valve	0.6	0.8	1.0	1.5	1.6	2.0	3.0
Male/Female adapter	2.0	2.8	3.5	4.5	5.5	6.5	9.0

*Assigned values. Other values for friction loss may be used if documentation from the pipe manufacturer is provided with the plan submittal.

Section 76

FRICTION LOSS CALCULATED

Our Example:

GPM: 30-45

TDH: 8.12'-11.91'

Static: 4.75'

Friction /100 ft:

30 gpm=1.81
45 gpm=3.85 } X1.86=

3.37' to 7.16'

Table IX – Friction Losses in Plastic Pipe (per 100 feet of pipe)
Pipe Diameter, Flow (gpm), Velocity (v)[2], and Friction Loss Head (H_f)[1]

Flow (gpm)	1"		1 1/4"		1 1/2"		2"		2 1/2"		3"		4"	
Q	v	H_f	v	H_f	v	H_f	v	H_f	v	H_f	v	H_f	v	H_f
1	0.37	0.11												
2	0.74	0.38	0.43	0.10										
3	1.11	0.78	0.64	0.21	0.47	0.10								
4	1.49	1.31	0.86	0.35	0.63	0.16								
5	1.86	1.92	1.07	0.52	0.79	0.24								
6	2.23	2.70	1.29	0.71	0.95	0.33	0.57	0.10						
8	2.97	4.59	1.72	1.19	1.26	0.56	0.77	0.17						
10	3.71	6.90	2.15	1.78	1.58	0.83	0.96	0.25	0.67	0.11				
15	5.57	14.7	3.22	3.76	2.37	1.74	1.43	0.52	1.01	0.22				
20	7.43	25.2	4.29	6.42	3.16	2.96	1.91	.87	1.34	0.37	0.87	0.13		
25	9.28	38.6	5.37	9.74	3.94	4.46	2.39	[illegible]	1.68	0.54	1.09	0.19		
30			6.44	13.6	4.73	6.27	2.87	1.81	2.01	0.76	1.30	0.26		
35			7.51	18.2	5.52	8.40	3.35	2.42	2.35	1.01	1.52	0.35	0.88	0.10
40			8.59	23.6	6.30	10.7	3.83	3.12	2.68	1.28	1.74	0.44	1.01	0.12
45					7.09	13.5	4.30	3.85	3.02	1.54	1.95	0.55	1.13	0.15
50					7.88	16.5	4.78	4.68	3.35	1.93	2.17	0.67	1.26	0.18
60					9.47	23.6	5.74	6.62	4.02	2.72	2.60	0.94	1.51	0.25
70							6.70	8.86	4.69	3.67	3.04	1.25	1.76	0.33
80							7.65	11.5	5.36	4.69	3.47	1.59	2.02	0.42
90							8.60	14.3	6.03	5.83	3.91	1.99	2.27	0.52
100									6.70	7.13	4.34	2.42	2.52	0.63
125									8.38	10.9	5.43	3.72	3.15	0.96
150											6.51	5.16	3.78	1.34
175											7.60	6.90	4.41	1.79
200											8.68	8.93	5.04	2.27
225													5.67	2.84
250													6.30	3.37
275													6.93	4.13
300													7.56	4.87
325													8.19	5.70

[1] This figure is based on flows for PVC Schedule 40 pipe (flow coefficient: C-150). Other values for friction loss may be used if documentation from the pipe manufacturer is provided with the plan submittal. Calculations using the Hazen-Williams equation

SELECTING AN EFFLUENT PUMP

- GPM: 45 gallons per minute
- TDH: 12 feet of head.

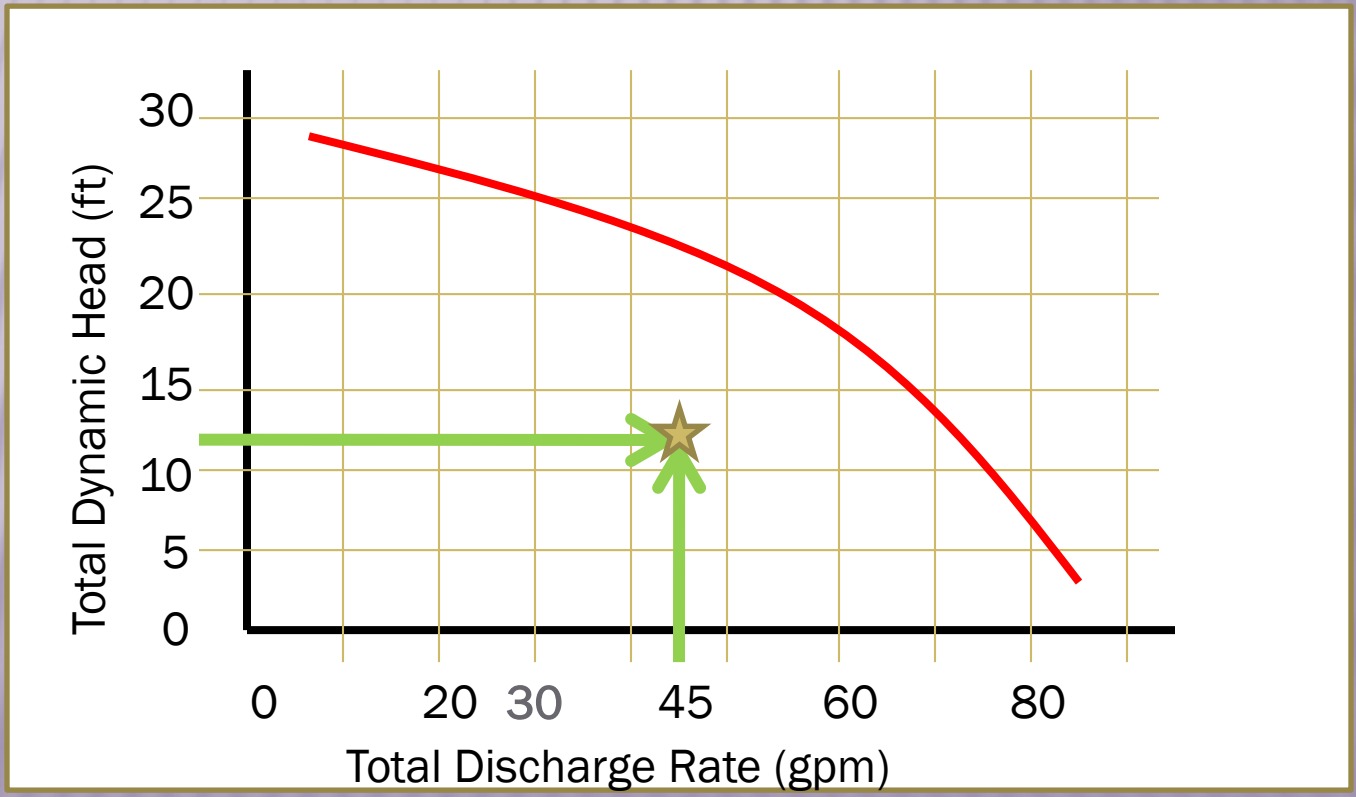

TRAINING MATERIALS

Indiana Environmental Health Association

- Wastewater Management Committee http://iehaind.org/WMCGuidance.htm

Residential Onsite Sewage Systems: Effluent Pump and Dose Tank Sizing Guidance Document

Includes design information for floats, pumps and dose tanks.

It's not the size of the dog in the fight, it's the size of the fight in the dog.

- Mark Twain

Remember:

1. Size the pump to the system. Do not design the system around a pump.
2. Pumps are not sized by horsepower alone. All ¼ hp pumps are NOT created equal.
3. Extra capacity in a dose tank is a good thing!

SEPARATION DISTANCES

- Table I, Residential Separation Distances
- Table II, Commercial Separation Distances

Separation distances for residential v. commercial are different

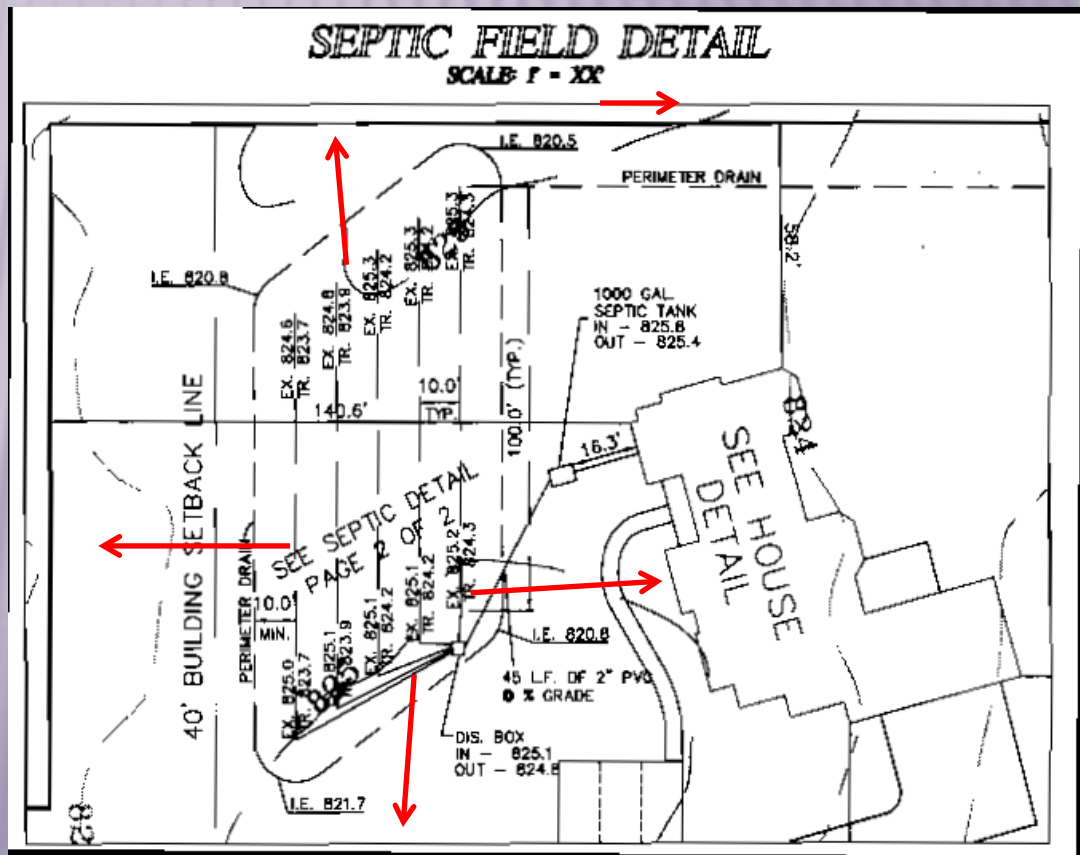

DISPERSAL AREA

410 IAC 6-8.1

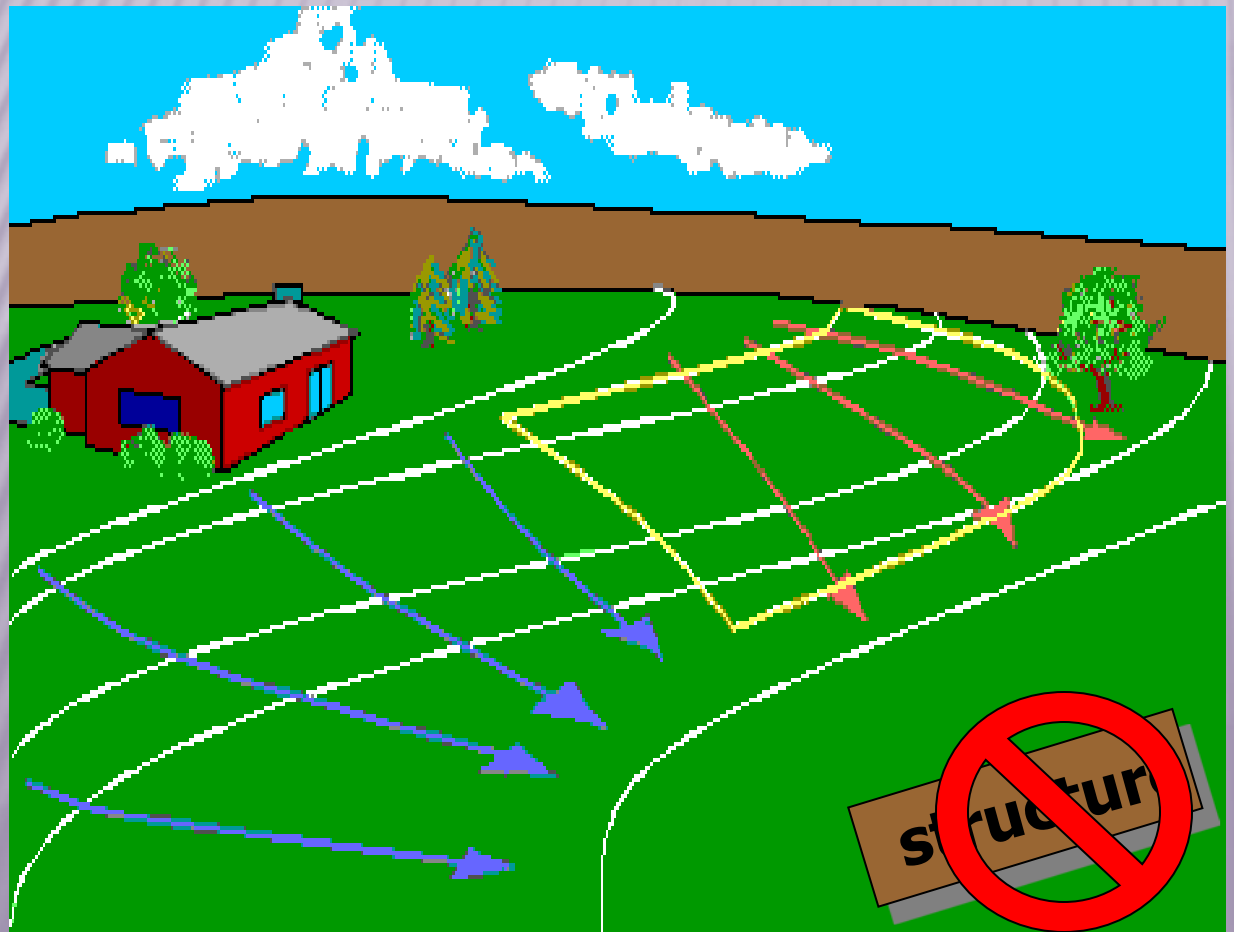

Area(s) beside or downslope of a soil absorption field for the dispersal of effluent away from the field

DISPERSAL AREA

- Required when
  - SLR $\leq$ 0.50, or
  - Limiting conditions in top 60”
    - bedrock;
    - densic material;
    - dense till;
    - soil with fragic properties; or
    - layers transitional to dense till

DISPERSAL AREA

Table II – Minimum Dispersal Areas[1] for Soil Absorption Systems	
Slope ≤ 1/2 %[2]: Onsite sewage system without perimeter drain	One-fourth (1/4) width of soil absorption system[5]
Slope > 1/2 %[3]: Onsite sewage system without perimeter drain	One-half (1/2) width of soil absorption system[5]
Any slope: Onsite sewage system with perimeter drain[4]	Ten (10) feet or the distance to the perimeter drain
[1]No buildings, foundations, slabs, garages, patios, barns, aboveground and belowground swimming pools, retaining walls, roads, driveways, parking areas, or paved sidewalks are allowed in the dispersal area.	
[2]Dispersal area is located on each side of the outside edge of the outer trench parallel to the length of the trench, or on each side of the outside edge of the sand area and parallel to the long axis of an elevated sand mound.	
[3]Dispersal area is located on the downslope side of the soil absorption system.	
[4]For onsite sewage systems with a subsurface perimeter drain without a seasonal high water table, the design and construction of the drain shall meet the requirements of section 59 of this rule.	
[5]Dispersal area width shall not be less than ten (10) feet. A dispersal area width of more than twenty-five (25) feet is not required.	

DISPERSAL AREA: ≤½ % & NO DRAINAGE

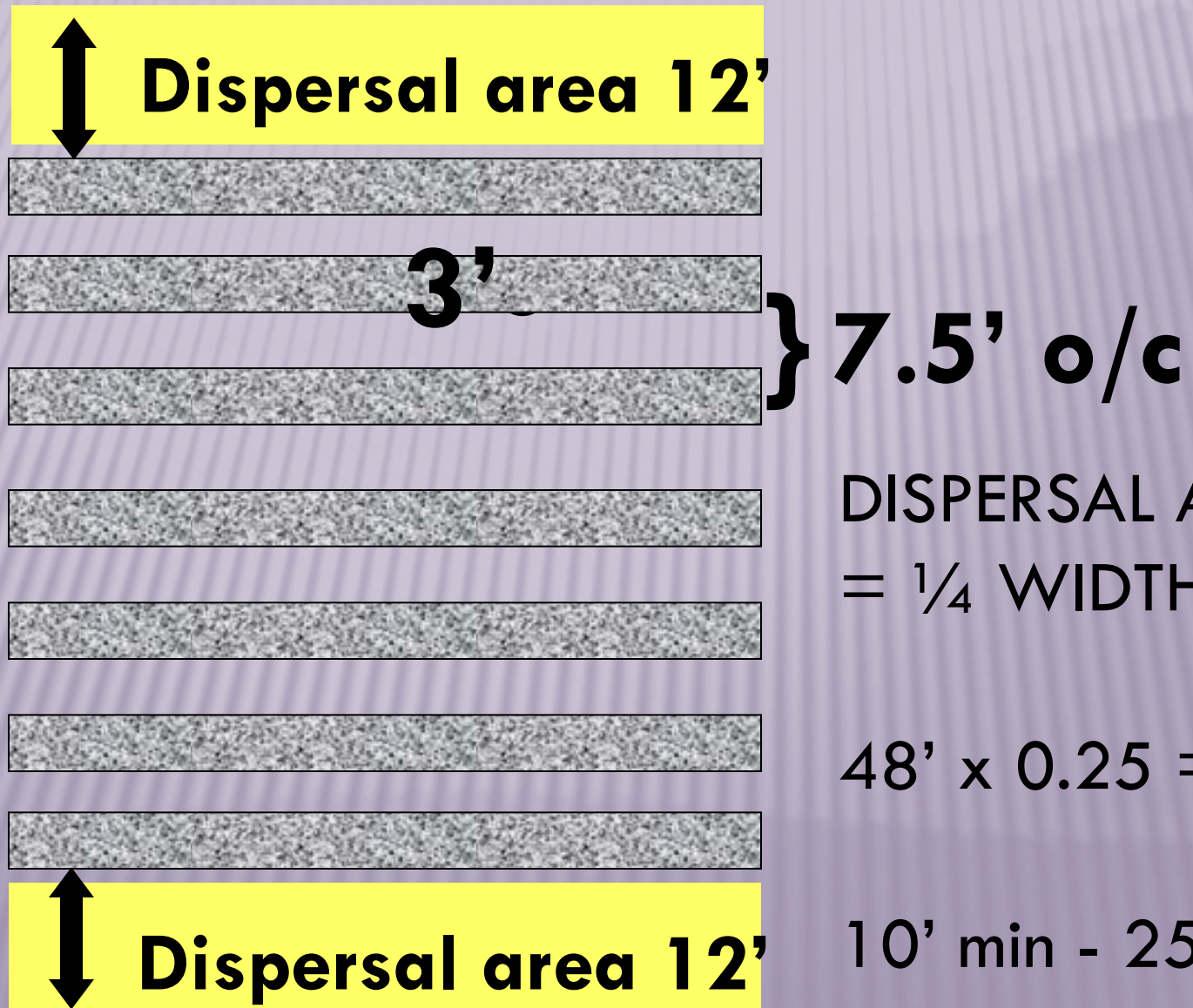

DISPERSAL AREA
= ¼ WIDTH SAF

48’ x 0.25 = 12’

10’ min - 25’ max

DISPERSAL AREA: > ½% & NO DRAINAGE

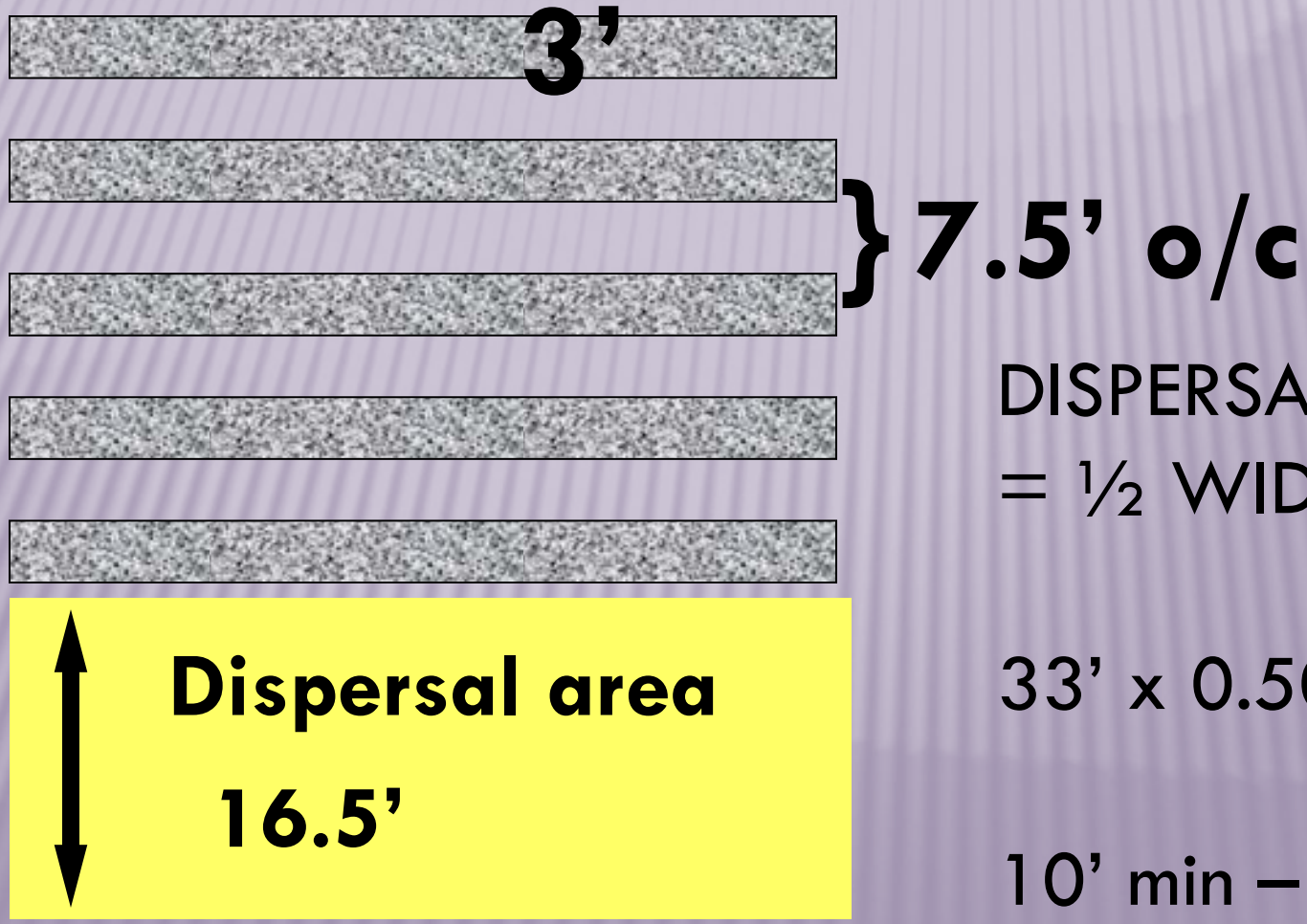

DISPERSAL AREA
= ½ WIDTH SAF

33’ x 0.50 = 16.5’

10’ min – 25’ max

DISPERSAL AREA: PERIMETER DRAIN ≤½%

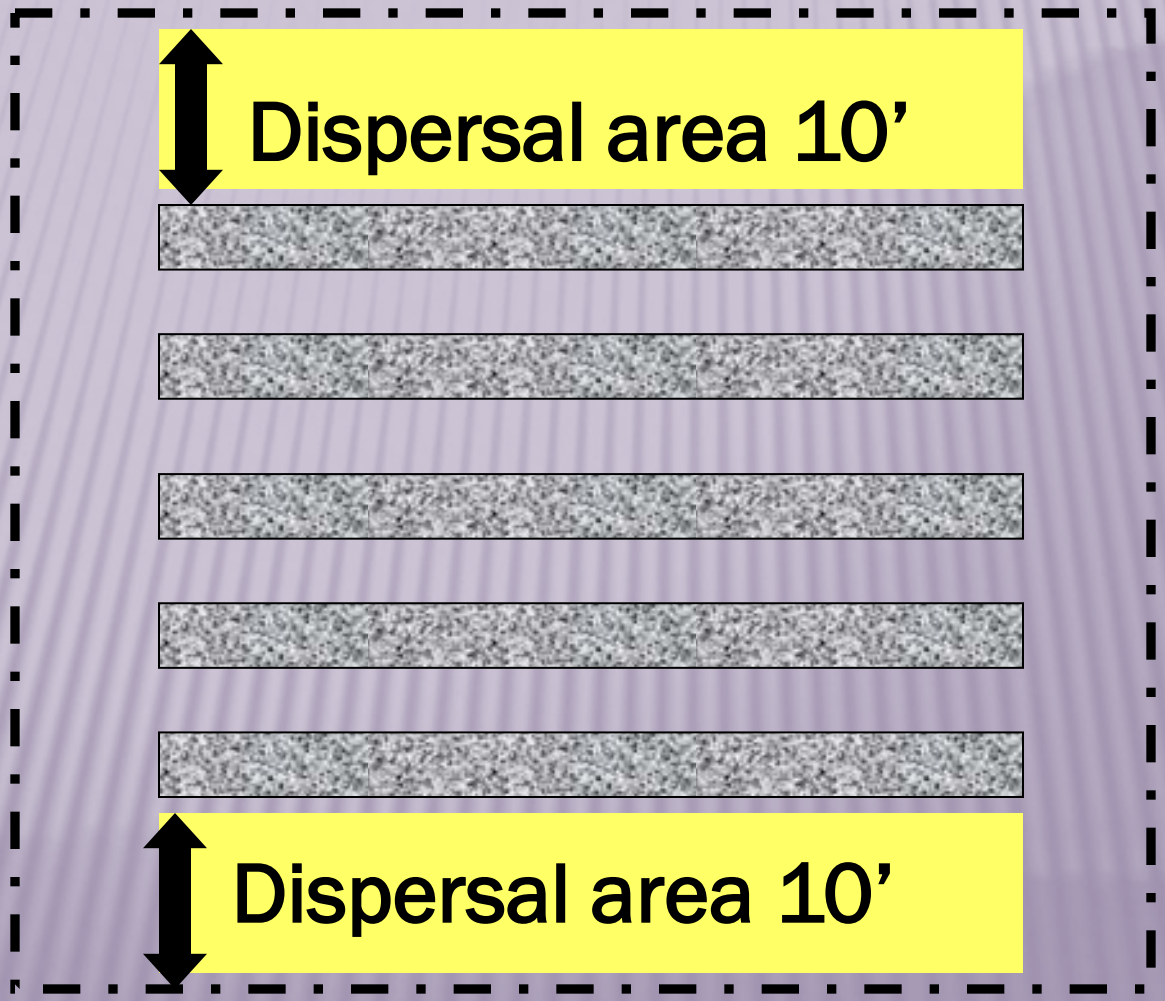

DISPERSAL AREA: PERIMETER DRAIN >½%

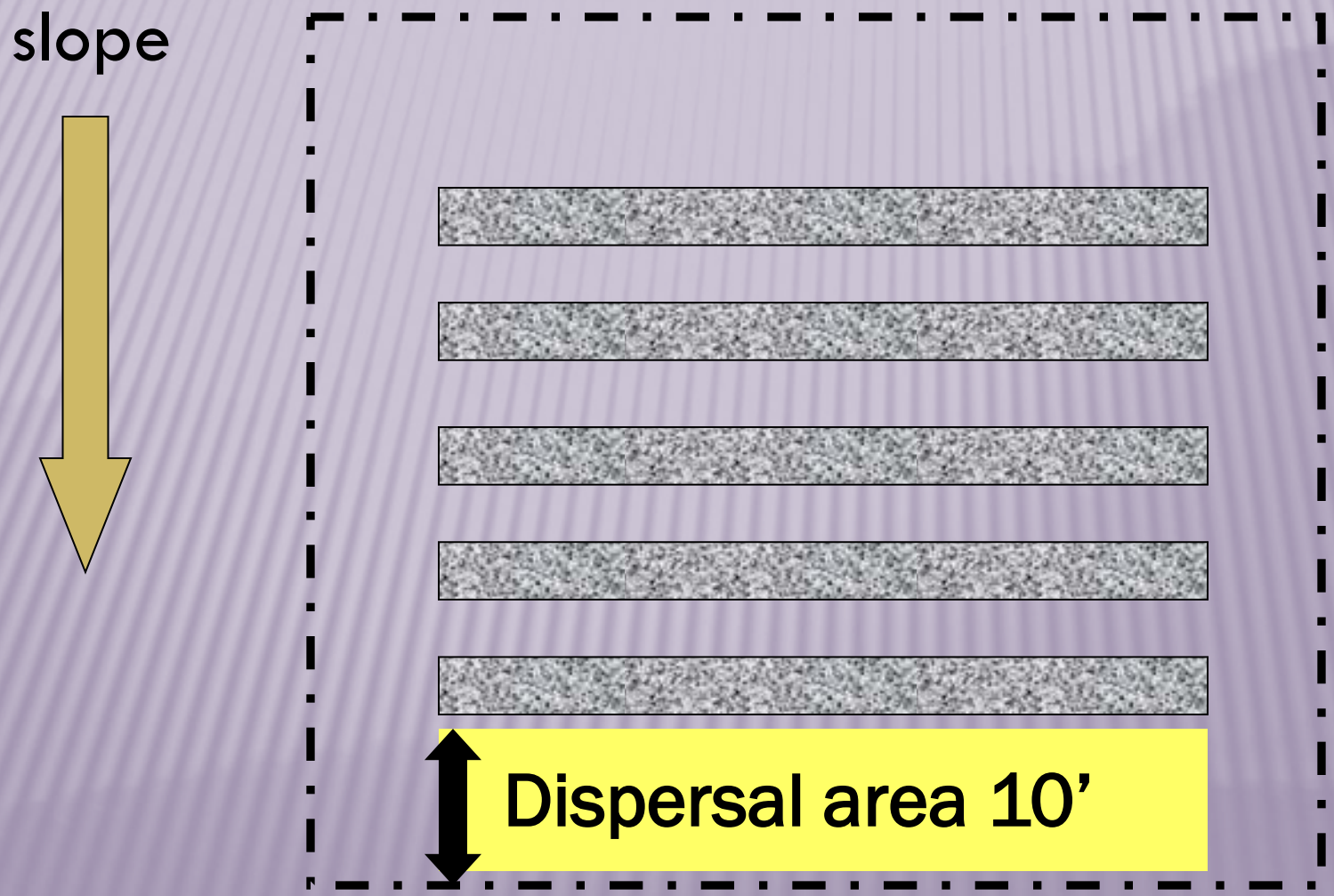

DISPERSAL AREA: NOTE

- SLR > 0.50 and no soil limitations:
- 10’ minimum dispersal area

SOIL ABSORPTION FIELD TECHNOLOGIES: SUBSURFACE TRENCHES

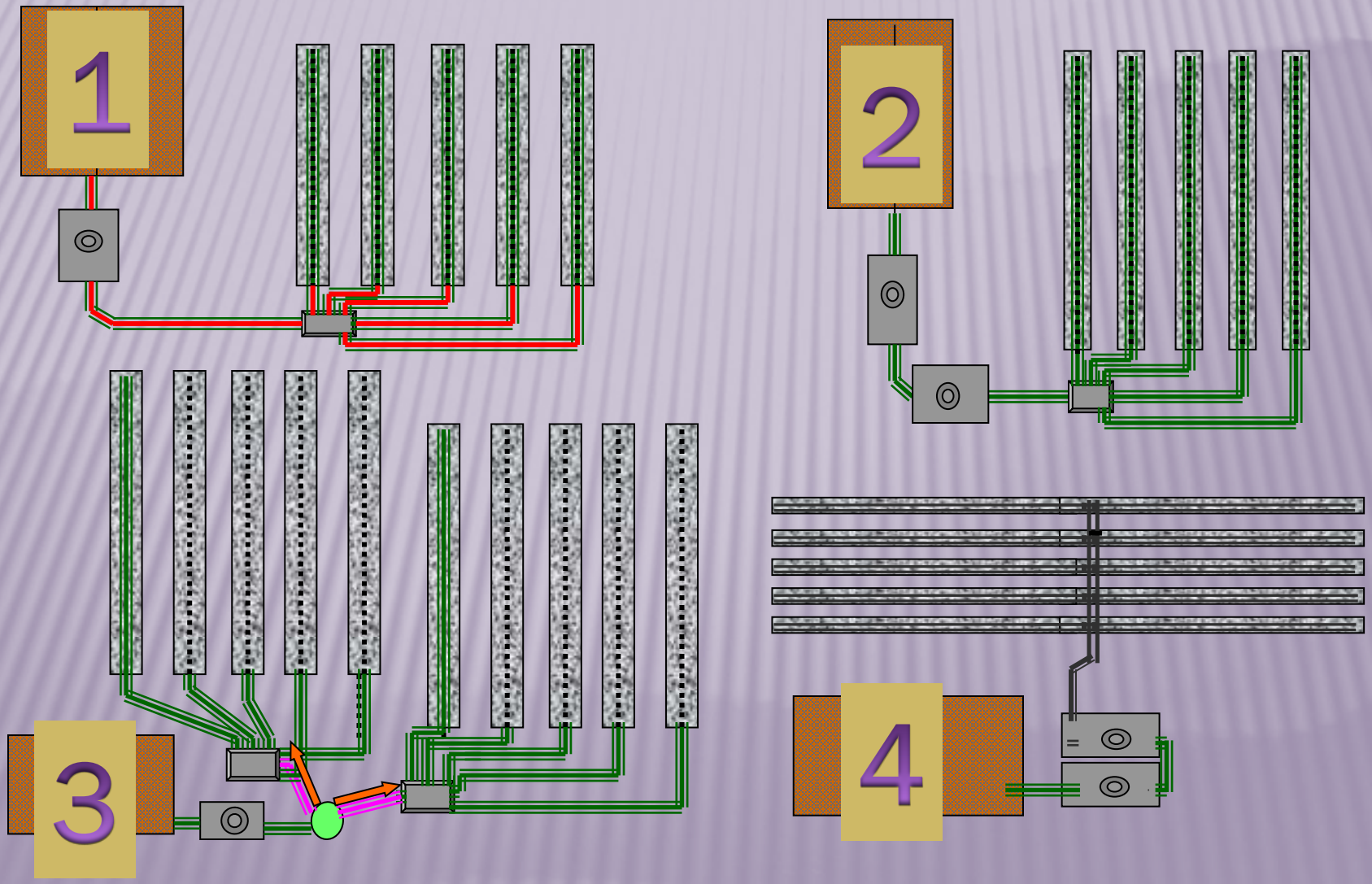

SAF DIMENSIONS

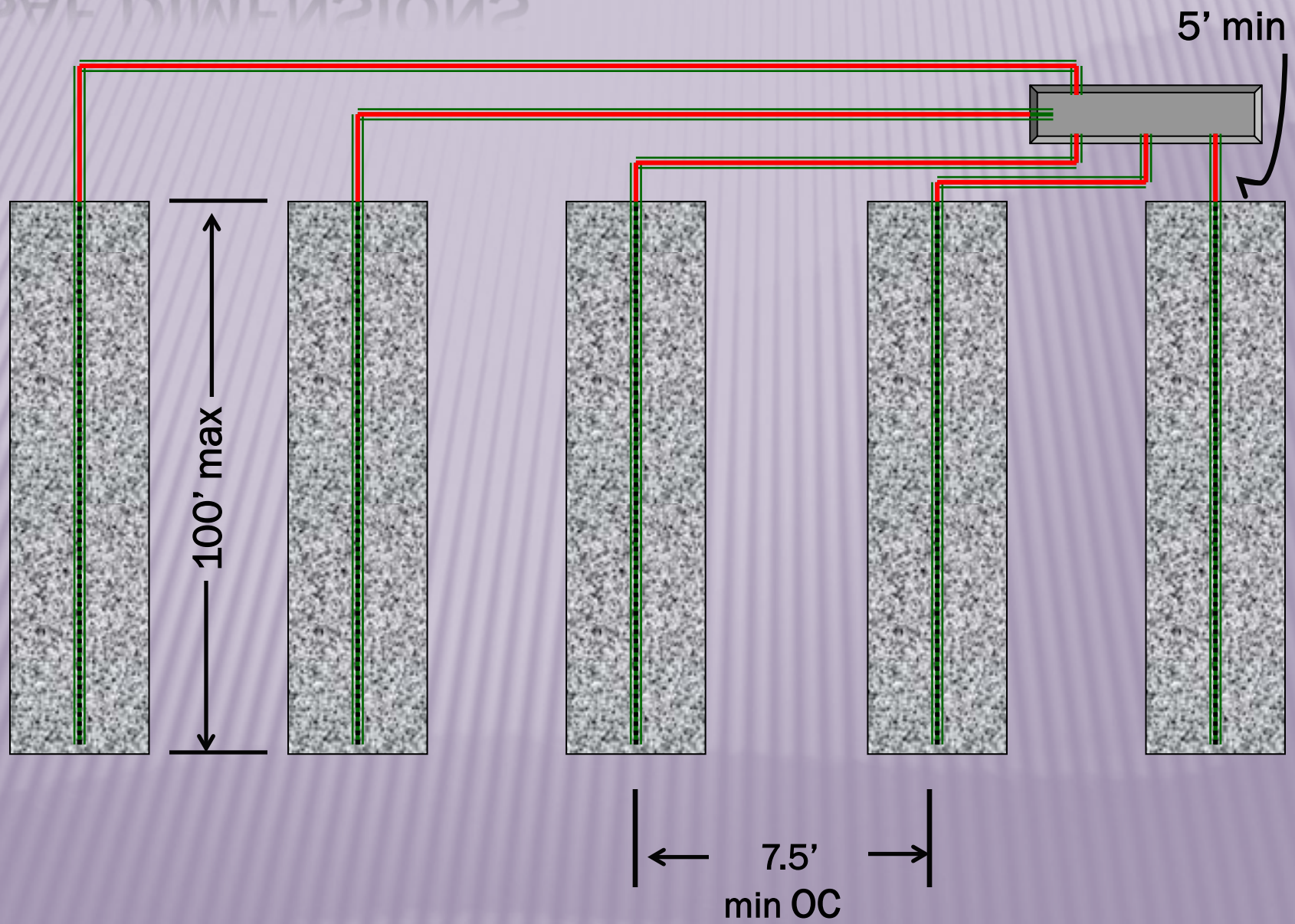

TRENCH DIMENSIONS

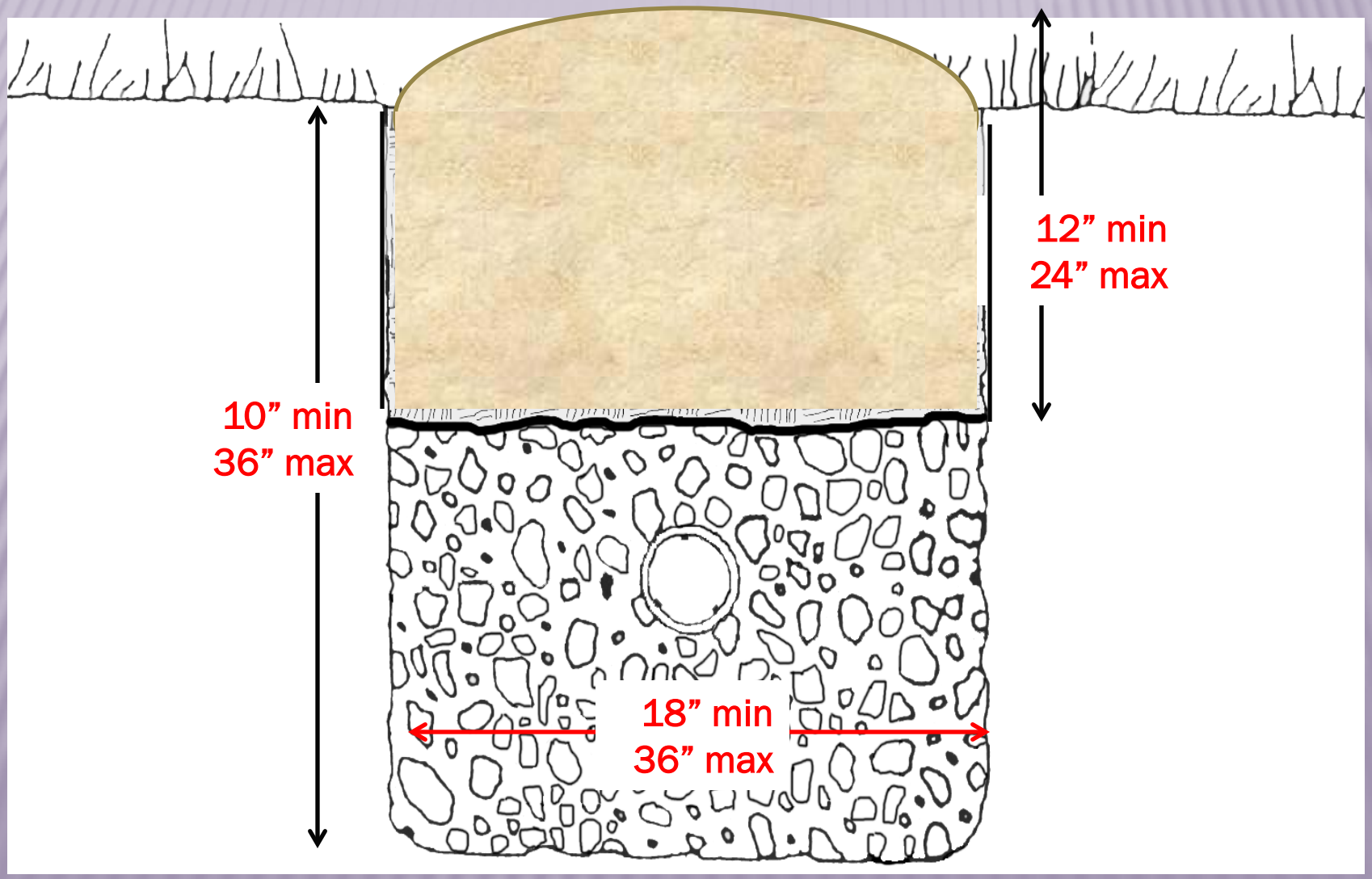

SOIL ABSORPTION FIELD OPTIONS

Gravel
Tire chips
Chambers
EZFlow

D-BOX – GRAVITY/FLOOD DOSE VS. TRENCH PRESSURE

4” PVC gravity effluent sewer

1 ½” to 4” PVC pressure effluent sewer

LEVEL IS THE KEY

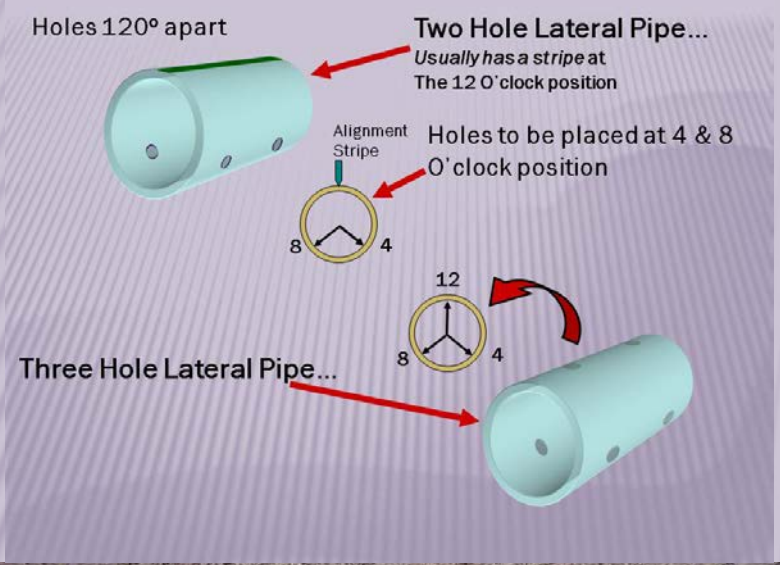

BARRIER MATERIAL

ALTERNATIVE METHODS/TECHNOLOGIES

- A.K.A. Technologies New to Indiana (TNI)
- Protocols for TNI established subsequent to:
  - Residential - 410 IAC 6-8.3-52(h)
  - Commercial - 410 IAC 6-10.1-49(h)

ALTERNATIVE METHODS/TECHNOLOGIES

- "Technology New to Indiana" defined:
  - Onsite sewage treatment or disposal methods, processes, or equipment not described in the rules of the department that have been approved by the department in accordance with section 52(h) of the residential rule and/or section 49(h) of the commercial.

PROGRAM INFORMATION AND POLICIES

- Technologies New to Indiana
  - **Components**
    - Single item within the system
  - **Secondary Treatment Units**
    - After the septic tank, before SAF
  - **Soil Absorption Fields**
    - Method of distributing to the soil
  - **Pre-treatment Devices**
    - Prior to septic tank

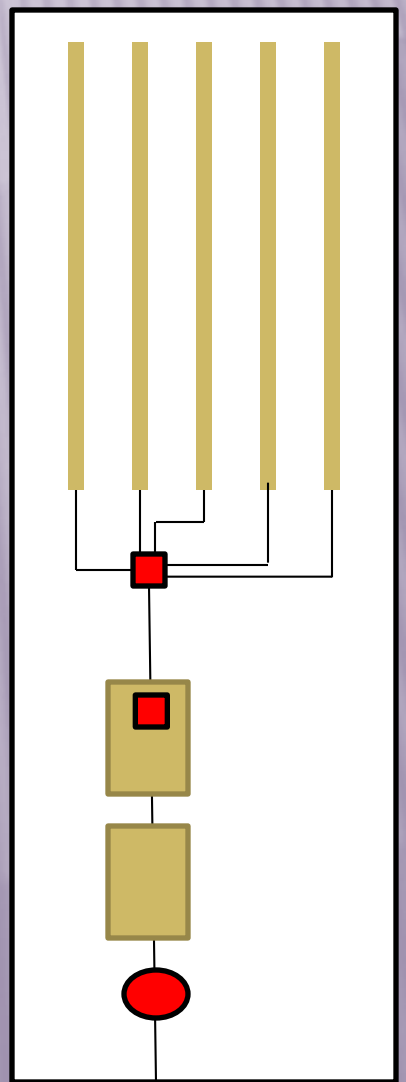

TNI APPROVED BY ISDH

- Secondary treatment units (ATUs)
- Recirculating media filter systems
- Subsurface flow constructed wetlands
- Recirculating subsurface flow constructed wetlands
- Type 2 elevated sand mounds
- At-grade systems
- Pressure manifold systems
- Presby Enviro-Septic
- ADS GEO-flow
- Eljen Indrain
- Siphons

TNI APPROVED BY ISDH

- Gravel substitute soil absorption field systems
  - Chamber
  - Sock pipe
  - Multi-pipe
  - Subsurface PC drip systems
  - Ezflow
  - Tire chips
  - Spider valves

PRETREATMENT OPTIONS

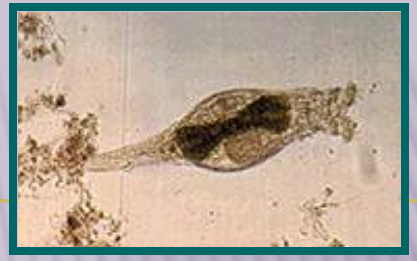

- Aerobic treatment unit
  - All proprietary systems
  - Provides aerobic treatment using artificial/mechanical aeration
  - Aerobic organisms digest food
  - Provides better quality effluent – organics & solids
  - Tend to be more sensitive to upset than septic tanks
  - High level of O&M required

AEROBIC TREATMENT UNIT

- Typical components

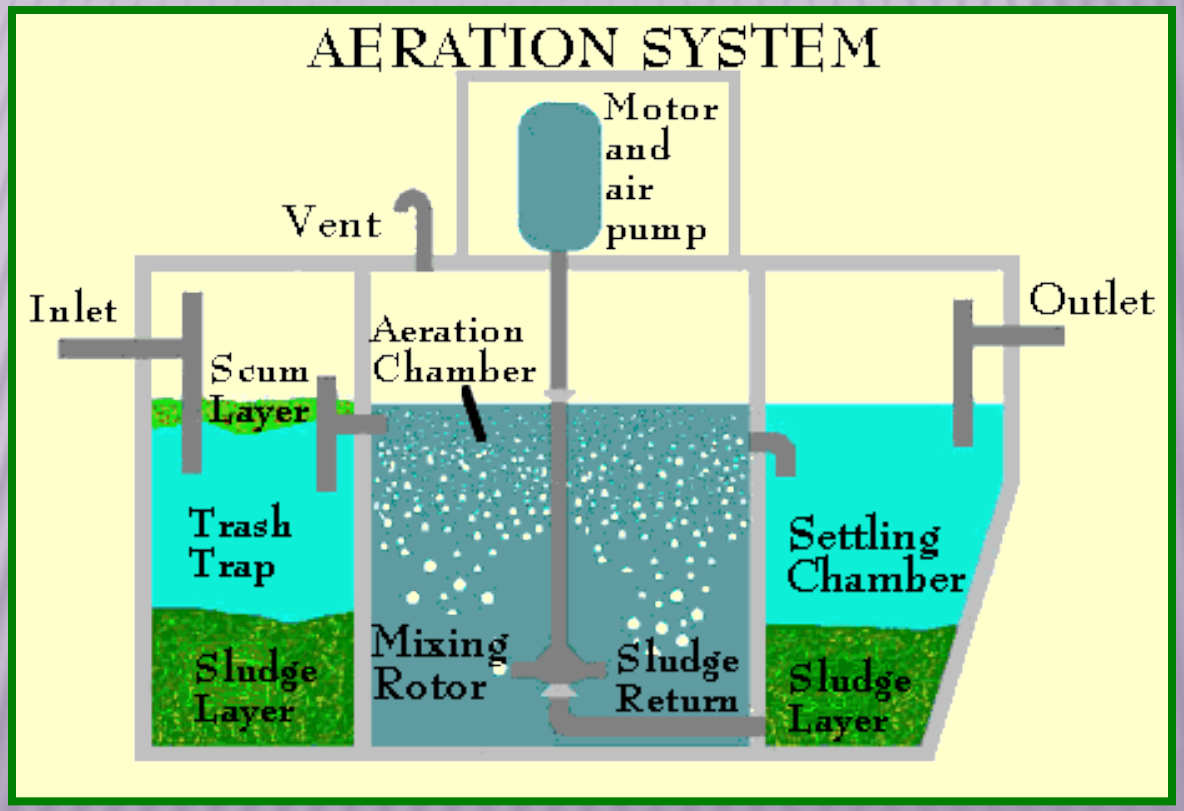

Purdue University

AEROBIC TREATMENT UNIT

- Suspended growth

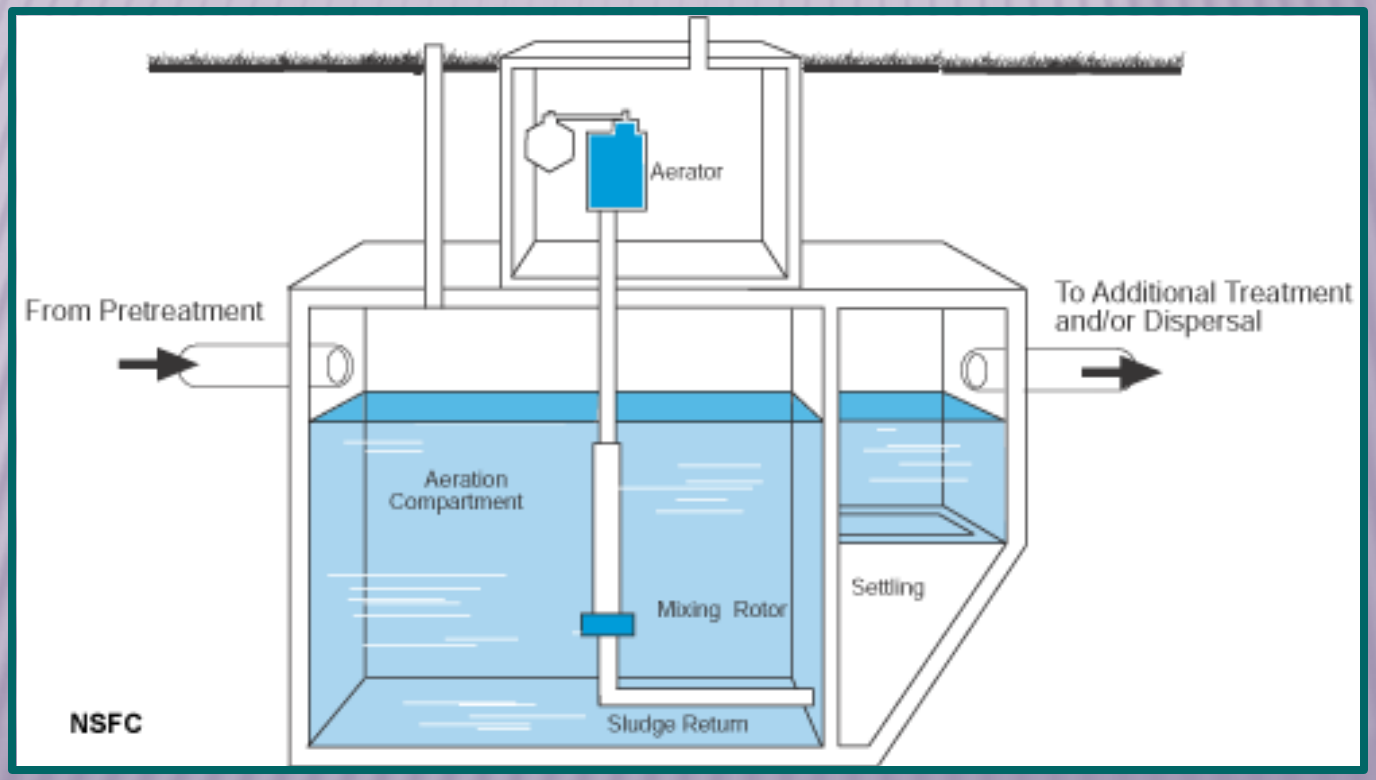

AEROBIC TREATMENT UNIT

- Fixed/attached growth

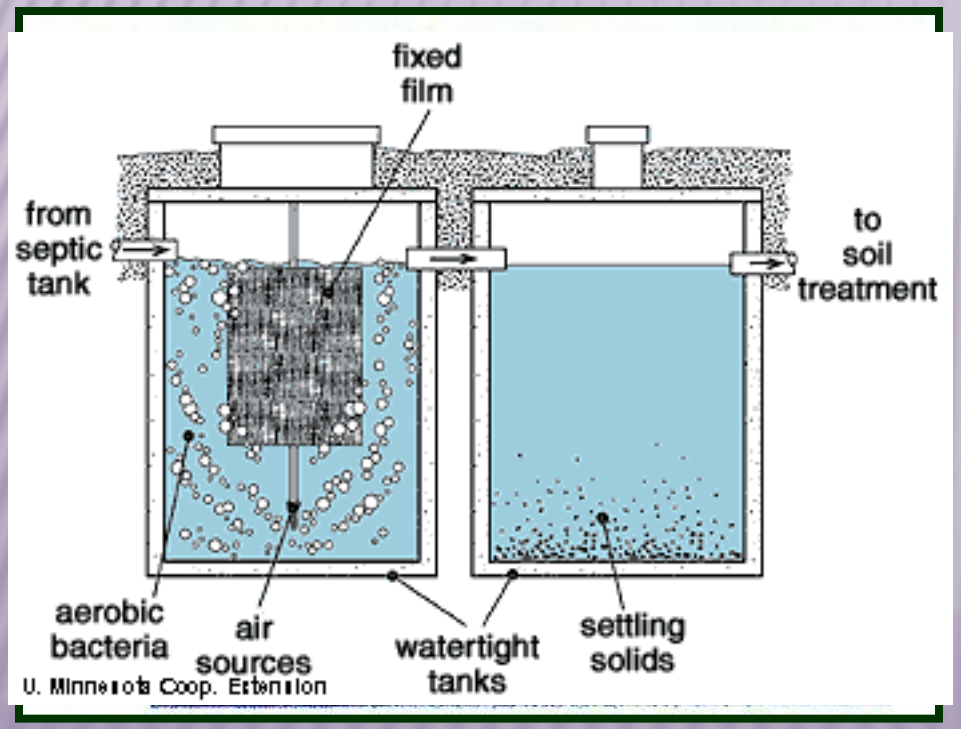

Attached growth media

AEROBIC TREATMENT UNIT

- Variety of shapes & configurations

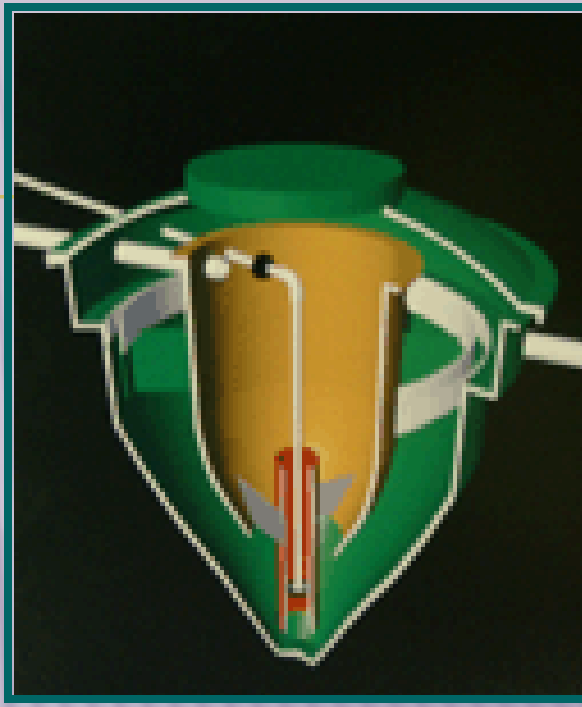

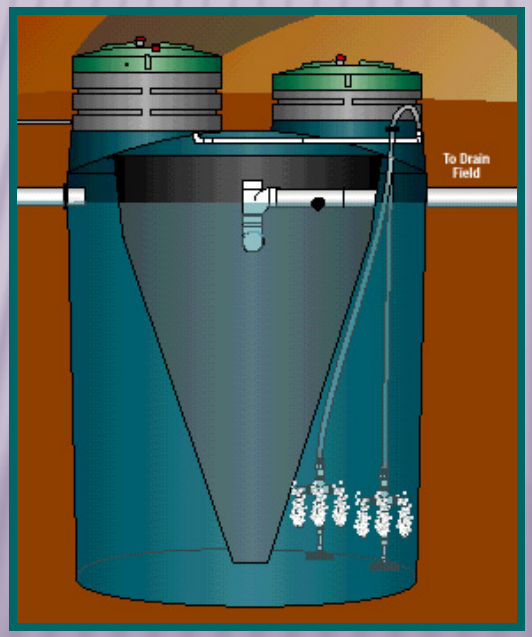

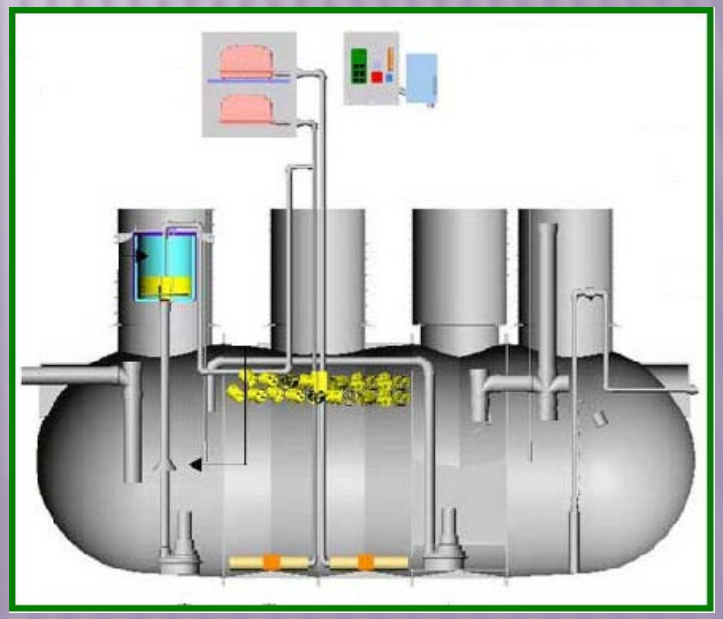

AEROBIC TREATMENT UNIT

- 410 IAC 6-8.3-58(e) & (f) – 410 IAC 6-10-1-68(h):
  - NSF/ANSI Standard 40 tested and certified
  - Preceded by a full sized septic tank in accordance with the rules
  - Followed by a full sized soil absorption field in accordance with the rules

AEROBIC TREATMENT UNIT

- Indiana Standards for Secondary Treatment Units:
  - After the manufacturer has written approval from the department under the standard above:
    - Trash tank instead of full sized septic tank
    - Soil absorption field size reduction
      - Up to 1/3 for clay soils
      - Up to 1/2 for sand soils

AEROBIC TREATMENT UNIT

- Important considerations
  - Treatment efficiencies – some variability

BOD_5	-	5-60 mg/l
TSS	-	5-60 mg/l
Fecal coliform	-	$<10^4$/100 ml

  - Solids generation
    - Must be checked regularly
    - May require pumping as often as every 7-9 months

MEDIA FILTER

- What is it?
  - A container or lined excavation containing a specific media through which wastewater flows
  - An aerobic, fixed-film bioreactor
  - Treatment occurs in an unsaturated flow

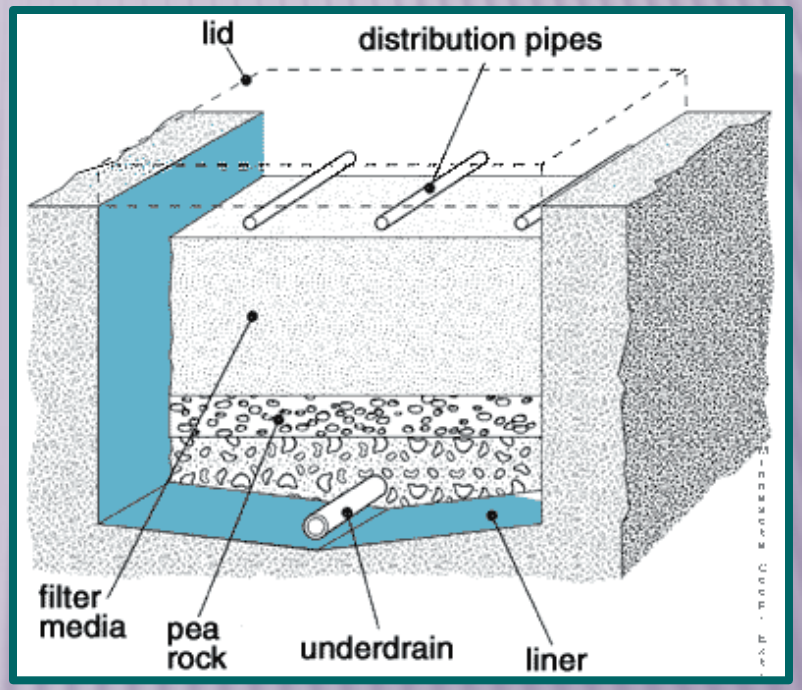

MEDIA FILTER

- How does it work?
  - Slow, **unsaturated** flow down through media
    - Must be sufficient retention time
    - Time between doses must allow sufficient re-aeration
  - Treatment occurs due to physical, chemical and biological processes
  - Flow options used
    - Single pass
    - Multiple pass

MEDIA FILTER

- Media used
  - Washed, graded sand
  - Gravel
  - Foam cubes
  - Peat
  - Synthetic textile materials

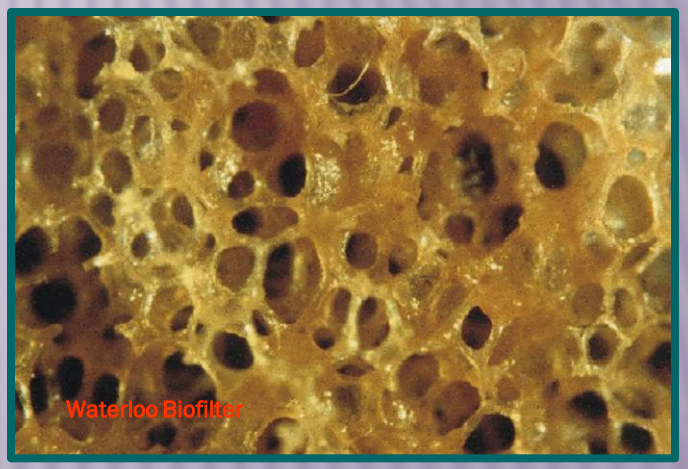

MEDIA FILTER

- Sand

MEDIA FILTER

- Foam cubes

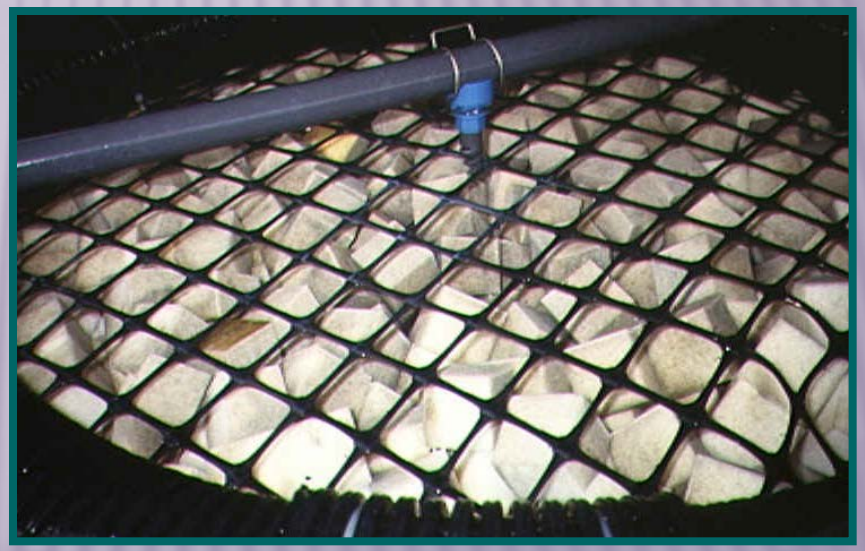

MEDIA FILTER

- Textile sheets/chips

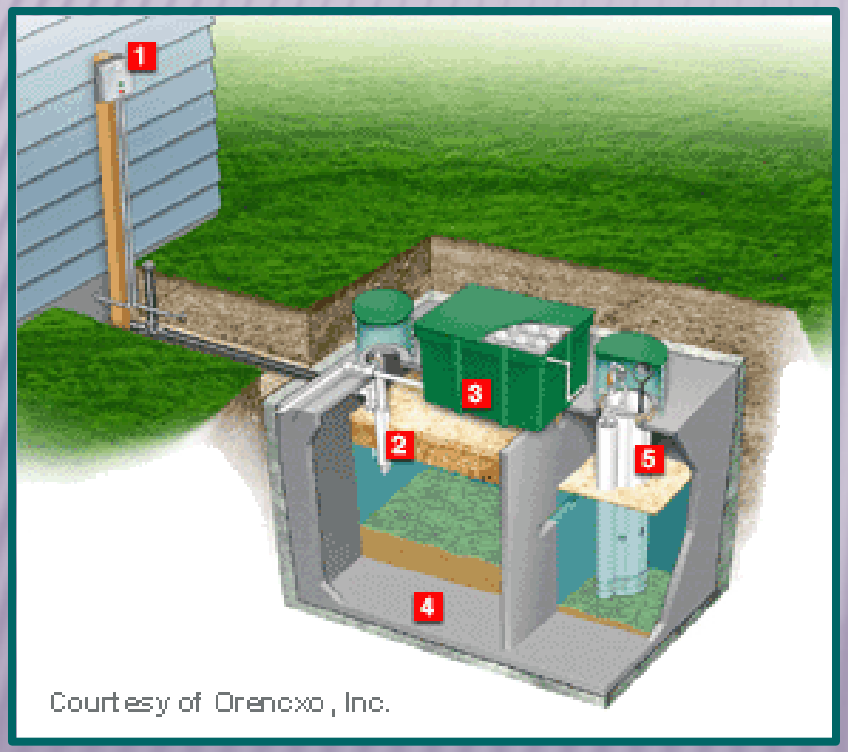

MEDIA FILTER

- Peat

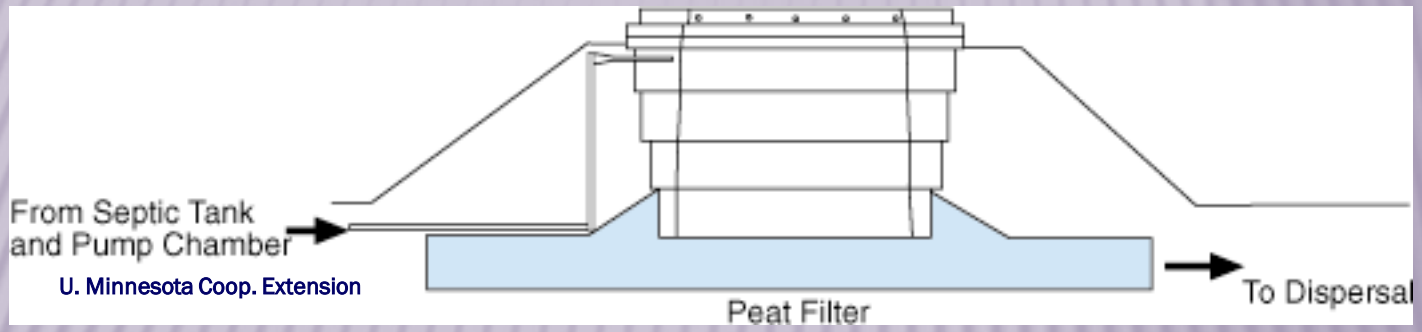

NSFC

MEDIA FILTER

- Design option - <u>Multiple-pass</u>

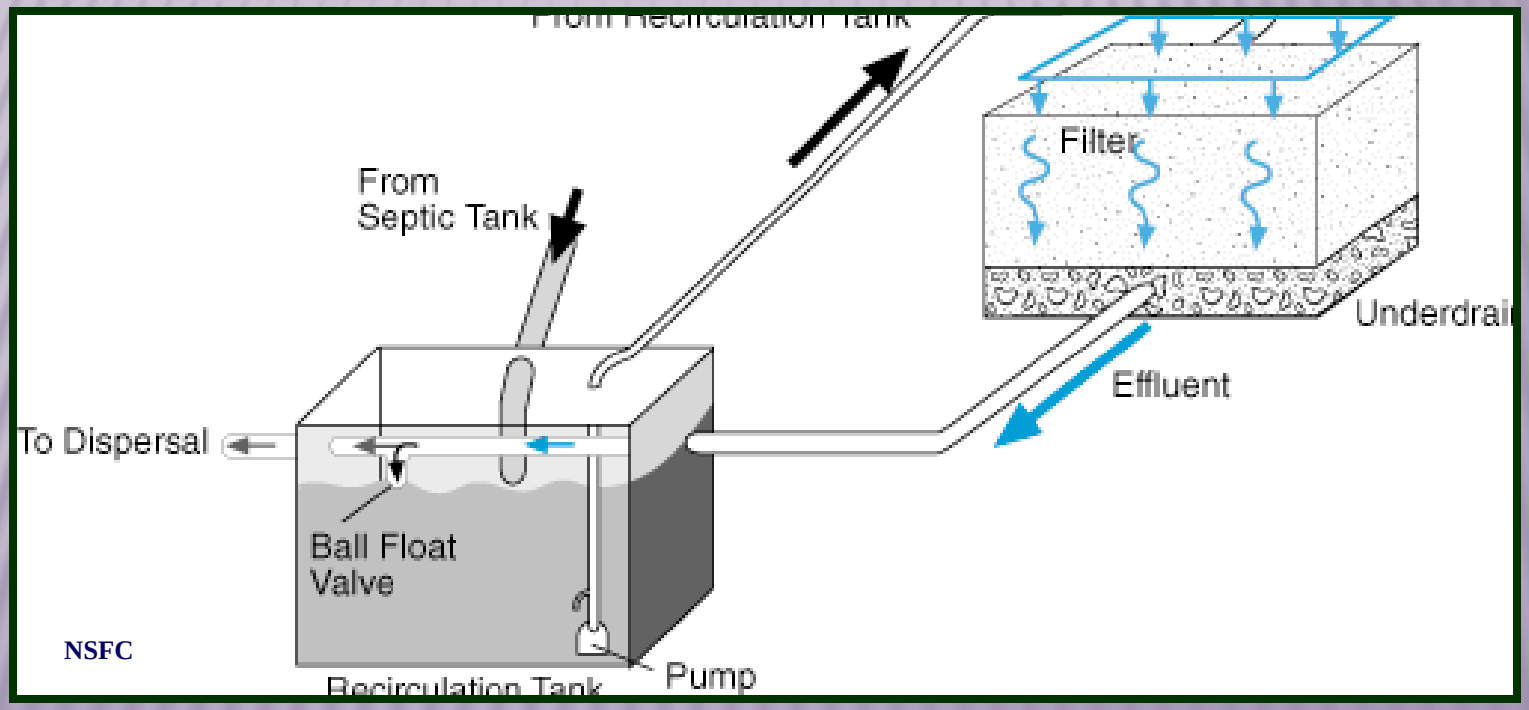

MEDIA FILTER

- Pertinent information
  - Timer-controlled dosing is being used
  - Typical loading rates for multiple-pass filters: up to 5 gal/ft^2/day
  - Multiple-pass gravel filters are primarily used for size, reliability and O/M simplicity
  - Many media filter types are proprietary
  - Typical sand & gravel filters are public domain

MEDIA FILTER

- Expected treatment efficiencies
  - Single-pass
    - BOD_5 - <10mg/l
    - TSS - <10mg/l
    - Fecal coliform - 99 - 99.99% reduction
  - Multiple-pass
    - BOD_5 - <10mg/l
    - TSS - <10 mg/l
    - Fecal coliform - 99 – 99.9 % reduction

PRETREATMENT OPTIONS

- Constructed wetlands – subsurface flow

CONSTRUCTED WETLAND

- What is it?
  - Largely anaerobic reactor unless air is artificially injected
  - Contained in a lined cell
  - Cell is filled with 20-24 inches of solid media, usually gravel
  - Appropriate wetland vegetation is planted
  - Liquid surface is 3 or more inches below the surface
  - Typical minimum cell length for single family home - 15 yards

CONSTRUCTED WETLAND

- How does it work?
  - Wastewater moves horizontally through the gravel
  - Physical processes of filtration and sedimentation are predominant removal mechanisms
  - Typically, have high hydraulic retention times – desire 2 to 3 days

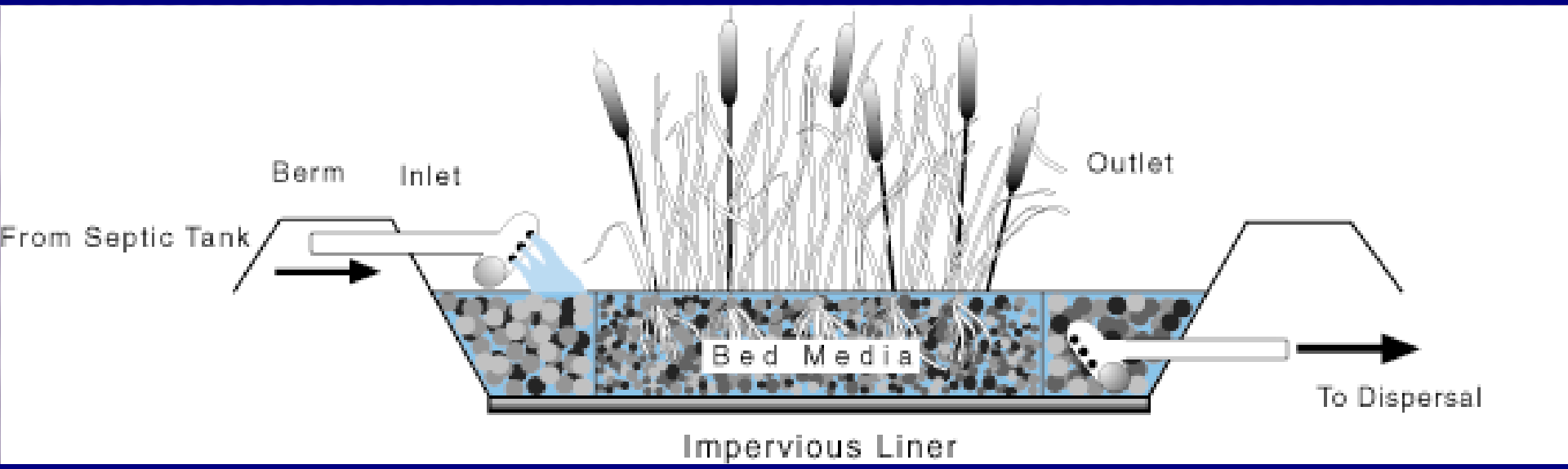

CONSTRUCTED WETLAND

- Other pertinent information
  - In cold climates, the liquid depth may be lowered
  - In cold climate areas vegetation may appear to be dead on the surface
  - Expected treatment efficiencies:

BOD_5	-	< 30 mg/l
TSS	-	<30mg/l
Fecal coliform	-	99 – 99.9 % reduction
Nitrogen	-	Insignificant

TNI PRETREATMENT DEVICES

- Algaewheel Inc. – BacPac Unit
  - Conditional Approval
  - Limited number of systems may be installed with ISDH approval
  - Single pass pretreatment system where algal colonies provide treatment and filtration

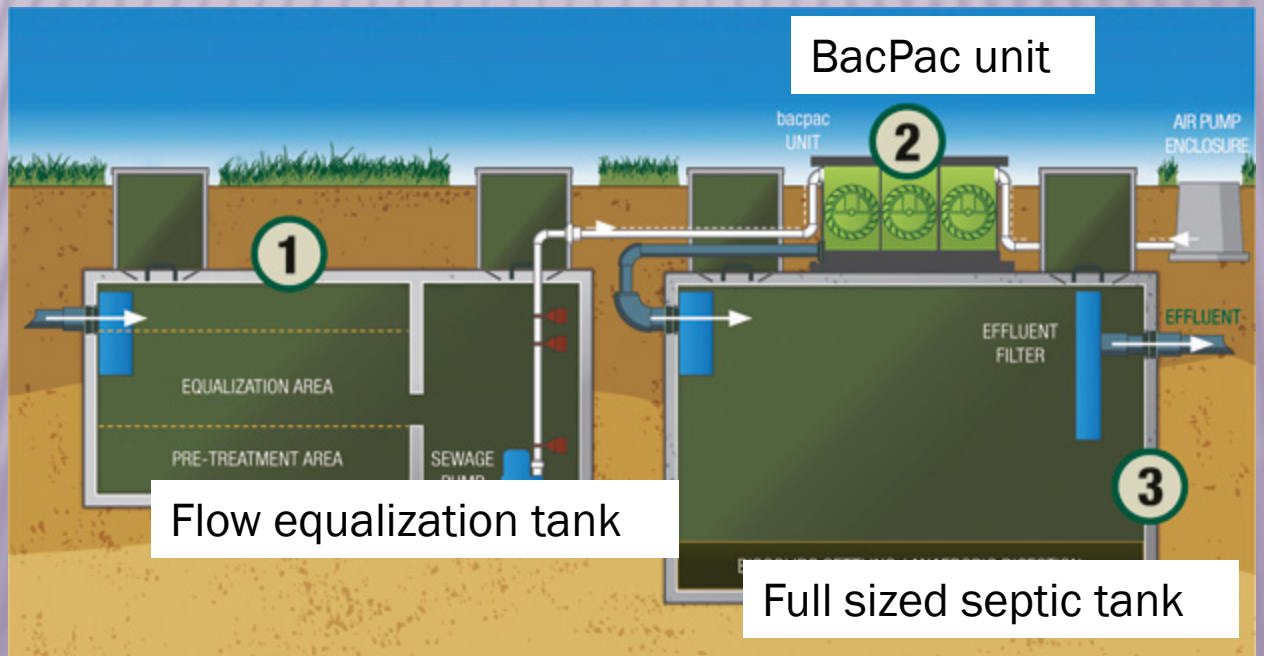

To full sized soil absorption field

TNI COMPONENTS

- Fluid Dynamic Siphons, Inc.
  - Replaces the effluent pump in flood dose systems
  - Project by project approval
  - Must have negative static head to the field

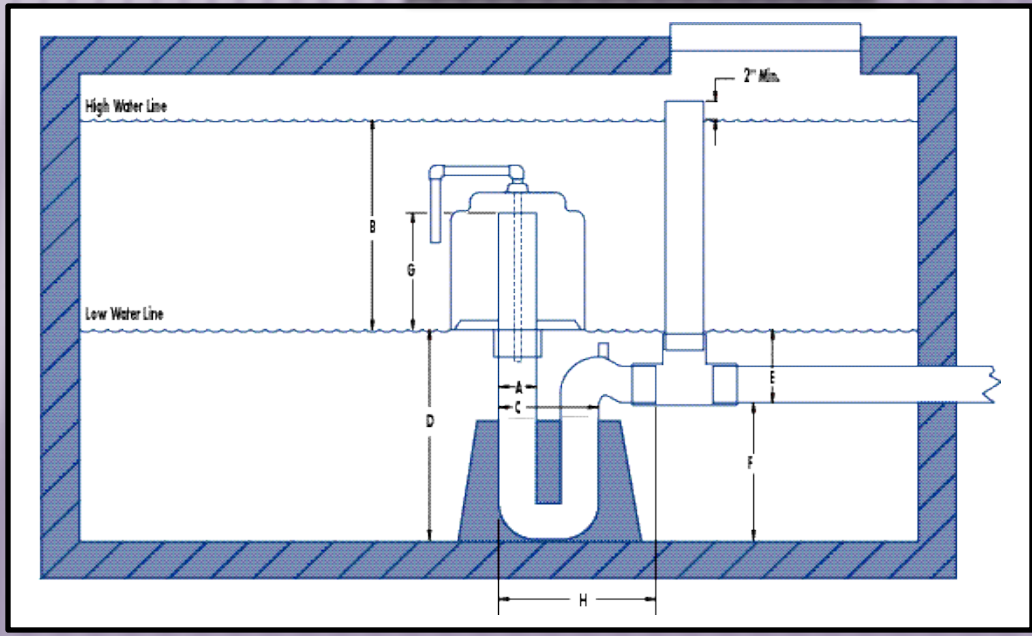

SECONDARY TREATMENT DEVICES

- O&M programs are required for all systems which include:
  - Secondary treatment devices
  - Treatment devices for high strength waste

SYSTEM SELECTION STRATEGIES

- Options for distribution media

OPTIONS FOR DISTRIBUTION MEDIA

- Gravel/Rock
  - Functions:
    - Supports distribution pipe
    - Transfers effluent from pipe to infiltrative surface
    - Provides storage of peak flows
    - Dissipates energy of surges
    - Supports sidewall and overlying soil

OPTIONS FOR DISTRIBUTION MEDIA

- Gravelless technologies
  - Can be used for both gravity and dosed flow networks
  - Can be used where gravel is used
  - Avoids many of the installation problems of aggregate
  - Have unique sizing and installation requirements
  - Have their own unique precautions

GRAVELLESS TECHNOLOGIES

- Currently, two options:
  - Aggregate-free technologies
  - Non-gravel porous media

GRAVELLESS TECHNOLOGIES

- Aggregate-free technologies - chambers

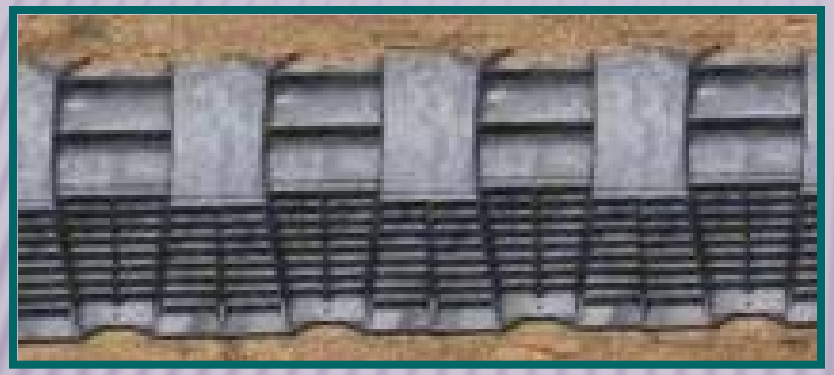

TNI – SOIL ABSORPTION FIELD

- Chambers
  - Subsurface trench systems only
    - Gravity flow
    - Alternating field gravity flow
    - Flood dose distribution
    - Pressure distribution
  - May allow up to a 25% reduction in the size of the soil absorption field
  - Size reductions may not be combined with size reductions allowed for other treatment options.

GRAVELLESS TECHNOLOGIES

- Aggregate-free technologies – gravelless pipe

TNI SOIL ABSORPTION FIELD

- Gravelless Pipe
  - Subsurface gravity systems only
  - 10” gravelless pipe
    - 1 lineal foot = 1 lineal foot of 3 ft. wide stone and pipe trench
    - Installed in 20” trench
  - 8” gravelless pipe
    - 1 lineal foot = 1 lineal foot of 2 ft. wide stone and pipe trench
    - Installed in 16” trench

GRAVELLESS TECHNOLOGIES

- Other aggregate-free technologies

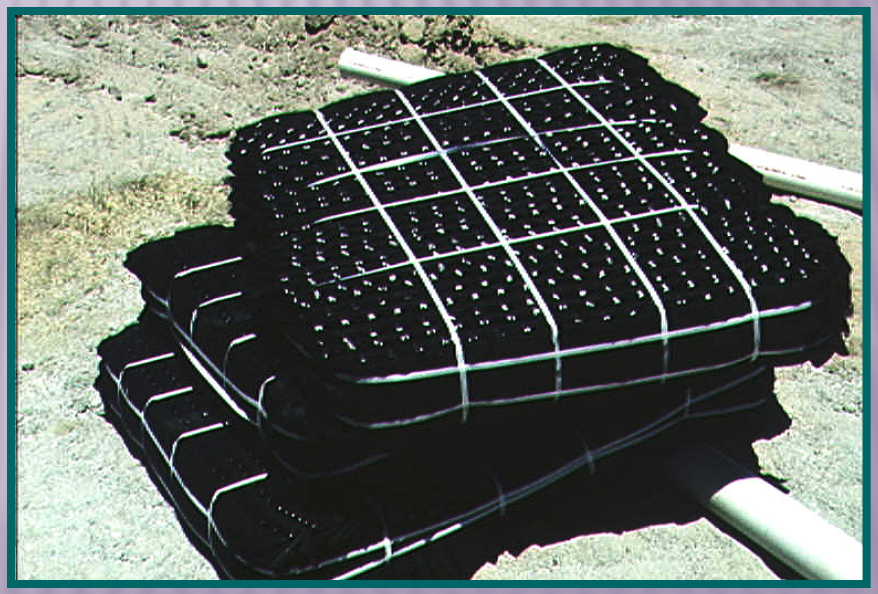

GRAVELLESS TECHNOLOGIES

- Non-gravel porous media

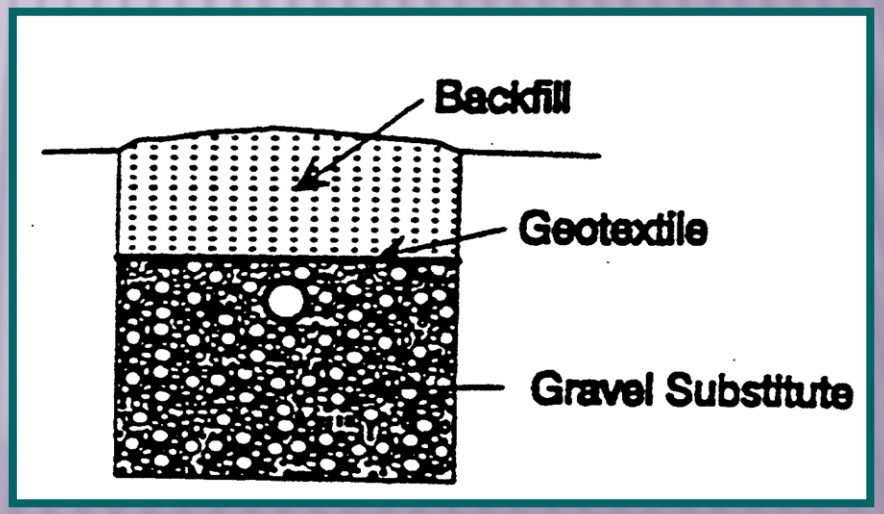

Courtesy of Washington Dept. of Health

SUBSURFACE DRIP IRRIGATION

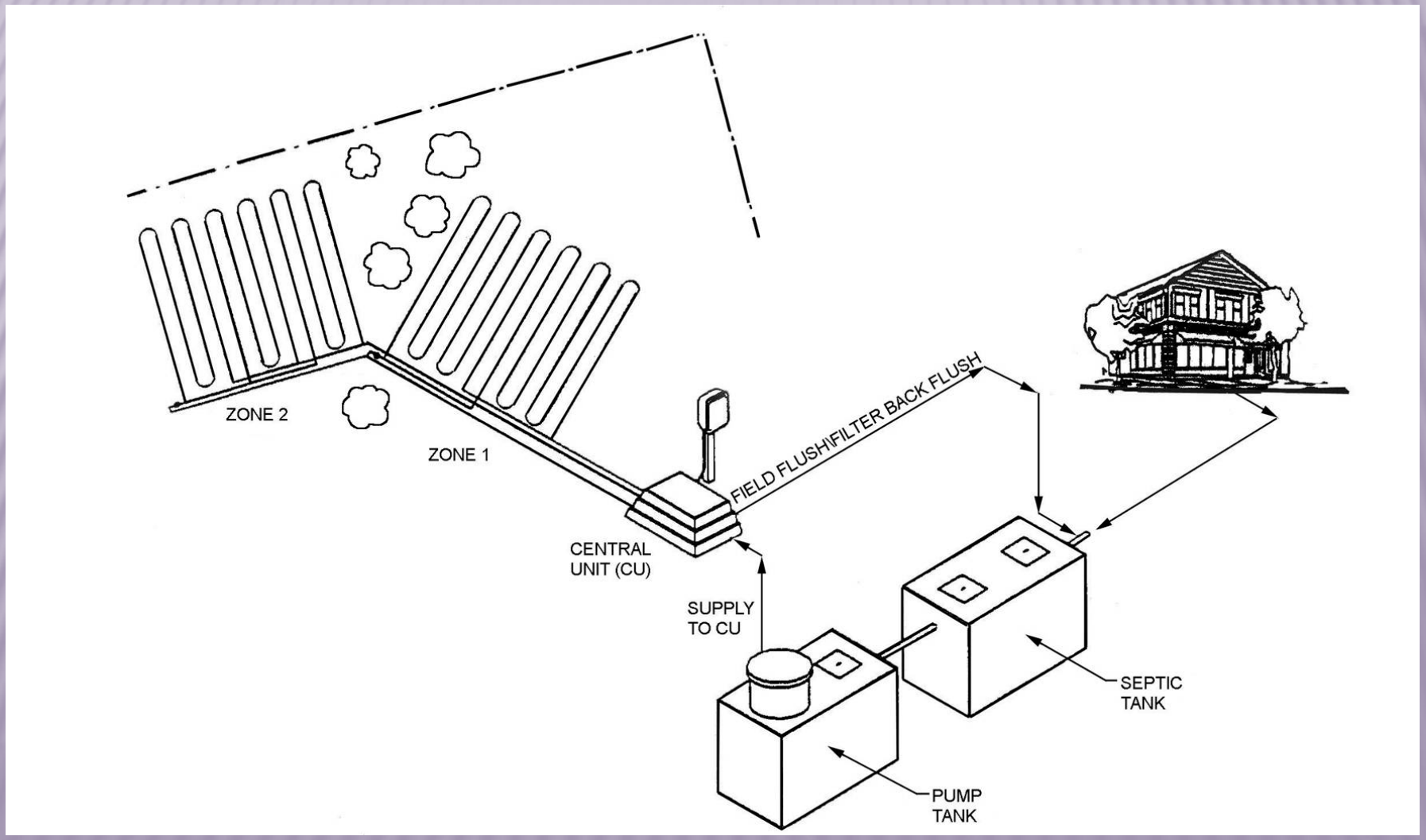

SUBSURFACE DRIP IRRIGATION

- Point of application - from pipe directly into soil

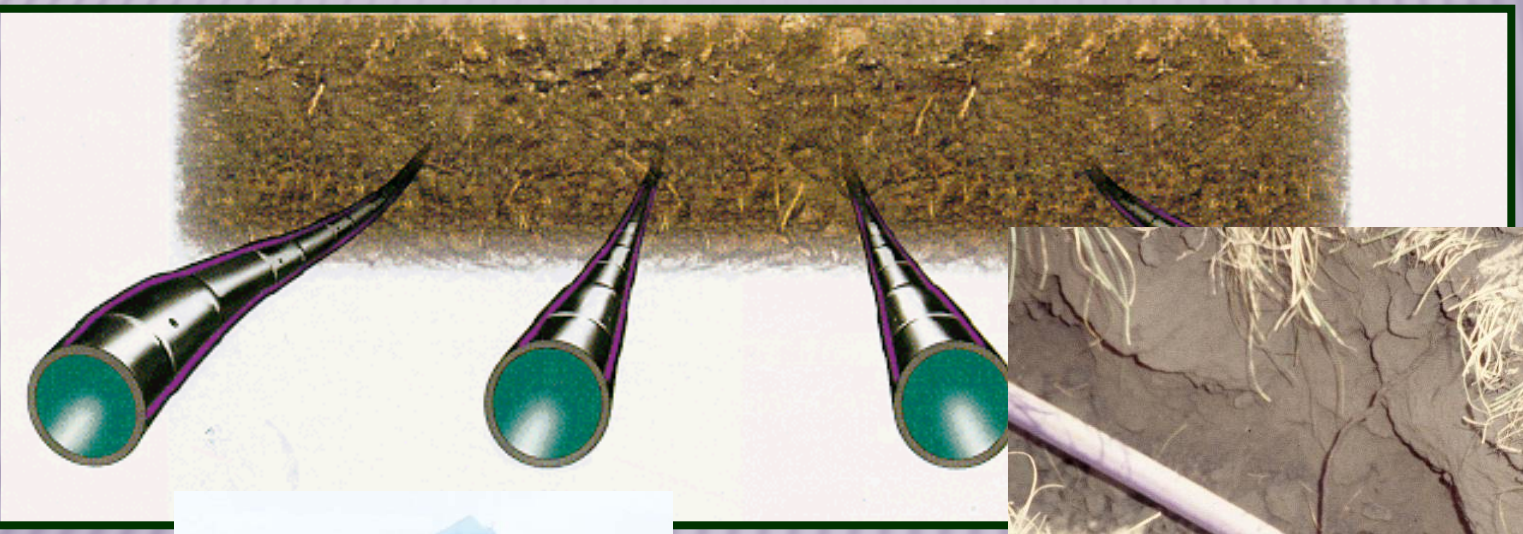

SUBSURFACE DRIP IRRIGATION

- The system is composed of:
  - Wastewater source
  - Pretreatment device(s)
  - Pump tank
  - Controller
  - Filtering device
  - Drip dispersal field(s)

SUBSURFACE DRIP IRRIGATION

- Drip Field Components
- Supply line
- Water distribution devices (flow splitting)
- Zones
- Supply manifold
- Drip laterals
- Return manifold
- Air relief/Vacuum breaker

SUBSURFACE DRIP IRRIGATION

- Uniform Dispersal
- Controlled Application Rate
- Emitters control water flow rate
- Small doses of wastewater into the soil.
- Wastewater moves through soil under unsaturated flow conditions, thus effectively treating the wastewater.
- Wastewater can be dosed into the active surface layer of the soil.
- Facilitates reuse of nutrients and water.

SUBSURFACE DRIP IRRIGATION

- Installation requirements
  - Drip lines buried to at least 6 inches in depth. Depth typically ranges from 6 to 12 inches.
  - Typical emitter spacing is 24 inches.
  - Typical drip lateral spacing is 24 inches.
  - Absorption area per emitter is typically four square feet.
  - Must meet separation distances.

SUBSURFACE DRIP IRRIGATION

SPIDER VALVE (HYDROSPLITTER

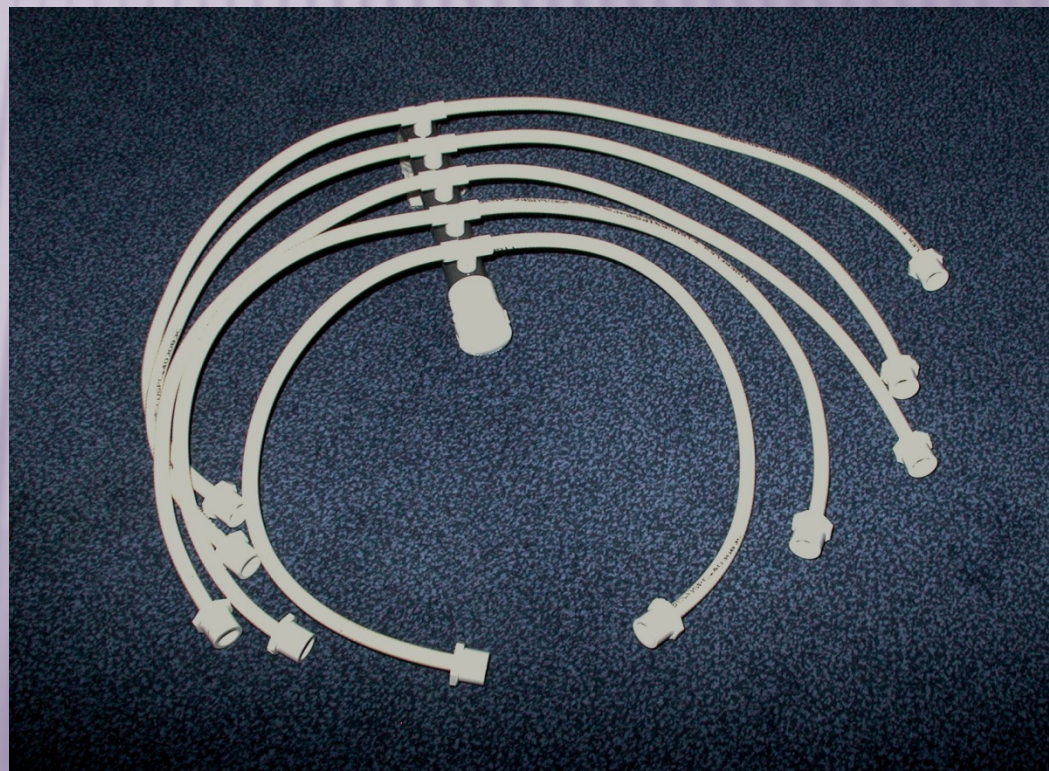

TECHNOLOGIES NEW TO INDIANA

- Summary
  - Too much to provide detail design information
  - Many require ongoing operation and maintenance (O & M contract)
  - For many, training and certification required by the manufacturer:
    - ATUs
    - ADS-Geoflow
    - Eljen
    - Presby

TECHNOLOGIES NEW TO INDIANA

IN.gov

About Indiana | Agriculture & Environment | Business & Employment | Education & Training | Family & Health | Law & Justice | Public Safety | Taxes & Finance | Tourism & Transportation

ISDH

Advanced Search

GOVERNOR MITCH DANIELS
Visit his Home Page »

Indiana State Department of Health

- ISDH Home
- About the Agency
- Meetings & Events
- Newsroom
- Contact Us
- Divisions
- Health Care Quality & Regulatory
- Health and Human Services
- Laboratory Services
- Public Health & Preparedness
  - Environmental Public Health
  - Epidemiology Resource Center
  - Food Protection
  - HIV/STD
  - Immunization
  - Local Health Department Information
  - Public Health Preparedness & Emergency Response
  - Office of Primary Care
  - Tuberculosis/Refugee Health
- Tobacco Prevention & Cessation
- Long Term Care
- Vital Records
- Women, Infants & Children (WIC)
- Publications & Brochures

Check out the latest Public Health MATTERS Newsletter! learn more

A to Z Index on Health Topics

A | B | C | D | E | F | G | H | I | J | K | L | M | N | O | P | Q | R | S | T | U | V | W | X | Y | Z

Healthcare Professionals	Consumers	Local Health Departments
Birth and Death Registration Systems	Birth and Death Certificates	Find a local health department
Disease and Conditions	Consumer Reports	Indiana Code for LHD's
Immunizations	Indiana Tobacco Quitline	LHD Outreach Office
Medical Errors Reporting System	MyVaxIndiana	Local health department services
More	More	

Online Services
FIRST IN LINE EVERY TIME

- Indiana Death Registration System (IDRS)
- Indiana Immunization Registry
- Food Protection Complaint Form
- MyVaxIndiana
- Nurse Aide Registry
- Radiography License Renewal
- Forms.IN.gov

More Online Services »
Subscriber Center »

Stay Connected

Facebook | YouTube | Twitter | RSS Feeds

Top FAQs | I Want To...

1. Apply for a Birth/Death Certificate
2. Register for the IDRS
3. Quit smoking
4. Find information on recent food recalls
5. Get a Flu Shot

DID YOU KNOW

TECHNOLOGIES NEW TO INDIANA

IN.gov

About Indiana | Agriculture & Environment | Business & Employment | Education & Training | Family & Health | Law & Justice | Public Safety | Taxes & Finance | Tourism & Transportation

ISDH

Advanced Search

GOVERNOR MITCH DANIELS
Visit his Home Page »

Indiana State Department of Health

- ISDH Home
- Environmental Public Health Home
- Agricultural Labor Camp Inspection and Licensing Program
- Applications, Bulletins, Forms, Laws and Regulations
- Contact Information
- Disaster Information
- Enviromental Hazards
- Health Nuisances, Public Nuisances & Property Nuisances
- Lead & Healthy Homes Program
- Local Health Departments - Indiana
- Mass Gatherings
- Mobile Home Community Inspection and Licensing Program
- Onsite Sewage Systems Program
- Plan Review Status
- Public Swimming Pool and Spa Program
- Recreational Vehicle Camp Inspection and Approval Progr
- Technology New to Indiana
- Vector Control Information
- Water Fluoridation Program
- Water Supply Information
- Web Resources
- Weights and Measures Program
- Youth Camp Inspection and

Environmental Public Health Home

Welcome to the Environmental Public Health Web Site

The Environmental Public Health Division mission is the prevention and control of environmentally related injuries and communicable diseases through the minimization of exposure to environmental health and safety hazards.

Program Overview

The Environmental Public Health Division is in the Public Health and Preparedness Commission, Indiana State Department of Health. The Environmental Public Health Division inspects and licenses mobile home parks and agricultural labor camps. They also inspect campgrounds, youth camps, and schools. The staff consults and provides technical assistance to local health departments on a variety of environmental health issues, including swimming pool sanitation. And they assist county sheriffs with licensing pursuant to the Mass Gathering Licensing Law, IC 16-41.22.

The Environmental Health Division also includes the onsite sewage program and the water fluoridation program. The onsite sewage program sets minimum State-wide standards for residential onsite sewage disposal systems. The staff also conducts workshops and seminars on soils analysis and residential sewage disposal, and provides consultation and technical assistance to local health departments on the operation of their sewage disposal programs. The onsite sewage program also reviews and approves plans and specifications for commercial onsite sewage disposal systems.

When tornadoes, flooding or other disaster strikes a community, Environmental Public Health staff provides direct assistance to local health departments upon request. We disseminate information about disinfection of wells and drinking water, and how to handle food, furniture, etc., that has been inundated during flooding. Our engineers also cooperate with State and federal emergency management agencies to assess the cost of repairs to any public works that might qualify for federal disaster assistance.

Online Services
FIRST IN LINE EVERY TIME

- Indiana Death Registration System (IDRS)
- Indiana Immunization Registry
- Food Protection Complaint Form
- MyVaxIndiana
- Nurse Aide Registry
- Radiography License Renewal
- Forms.IN.gov

More Online Services »
Subscriber Center »

Stay Connected

Facebook | YouTube
Twitter | RSS Feeds

Top FAQs | **I Want To...**

1. Apply for a Birth/Death Certificate
2. Register for the IDRS
3. Quit smoking
4. Find information on recent food recalls
5. Get a Flu Shot

DID YOU KNOW

TECHNOLOGIES NEW TO INDIANA

Indiana State Department of Health

- ISDH Home
- Environmental Public Health Home
- Agricultural Labor Camp Inspection and Licensing Program
- Applications, Bulletins, Forms, Laws and Regulations
- Chemicals/Environmental Epidemiology
- Contact Information
- Disaster Information
- Health Nuisances, Public Nuisances & Property Nuisances
- Local Health Departments - Indiana
- Mass Gatherings
- Mobile Home Community Inspection and Licensing Program
- Onsite Sewage Systems Program
- Public Swimming Pool and Spa Program
- Recreational Vehicle Camp Inspection and Approval Program
- Technology New to Indiana
- Vector Control Information
- Water Fluoridation Program
- Water Supply Information
- Web Resources
- Weights and Measures Program
- Youth Camp Inspection and Approval Program

Environmental Public Health Home > Technology New to Indiana

Technology New to Indiana

Program Overview

The Indiana State Department of Health (department) may approve the installation or construction of technology new to Indiana (TNI). TNI are sewage treatment or disposal methods, processes or equipment, not described in the residential or commercial rules (*410 IAC 6-8.2* and *410 IAC 6-10*, respectively), for which research or documented field performance demonstrates that the technology meets or exceeds the requirements of the rules. The department also establishes standards and best practices that describe performance, design, installation, or operation and maintenance (O&M) of TNI.

An applicant proposing a TNI for use in Indiana must comply with applicable requirements contained in *410 IAC 6-8.2*, *410 IAC 6-10*, and applicable interpretations, standards, best practices and guidelines of the department.

Information Form for Technology New to Indiana
Information Necessary for Review of Technology New to Indiana
Technology New to Indiana Review and Approval Process
Approved Technologies New to Indiana

Indiana Standards for Secondary Treatment Systems
Indiana Standards for Subsurface Drip Systems
Indiana Interpretation of 410 IAC 6-8.2: Tanks Fitted with Aeration Units for Aerobic Digestion

Directories

City and County Health Departments

Online Services
FIRST IN LINE EVERY TIME

- Indiana Death Registration System (IDRS)
- Indiana Immunization Registry
- Food Protection Complaint Form
- Public Health Training for Providers (CMEs)
- Nurse Aide Registry
- Radiography License Renewal
- Forms.IN.gov

More Online Services »
Account Center »

Stay Connected

Twitter | YouTube
RSS Feeds | Mobile

Top FAQs | **I Want To...**

1. Where do I obtain a copy of an Indiana birth or death certificate?
2. As an adopted child, how do I get information about my birth parents?
3. What is INShape Indiana?
4. What is Living a Healthy Life with Chronic Conditions?
5. Is there an INShape Indiana representative in my county?

TECHNOLOGIES NEW TO INDIANA

Indiana State Department of Health

- ISDH Home
- Environmental Public Health Home
- Agricultural Labor Camp Inspection and Licensing Program
- Applications, Bulletins, Forms, Laws and Regulations
- Chemicals/Environmental Epidemiology
- Contact Information
- Disaster Information
- Health Nuisances, Public Nuisances & Property Nuisances
- Local Health Departments - Indiana
- Mass Gatherings
- Mobile Home Community Inspection and Licensing Program
- Onsite Sewage Systems Program
- Public Swimming Pool and Spa Program
- Recreational Vehicle Camp Inspection and Approval Program
- Technology New to Indiana
- Vector Control Information
- Water Fluoridation Program

Environmental Public Health Home > Technology New to Indiana > Approved Technologies

Approved Technologies

The department maintains the list below of TNI that have been approved. With each technology that has been approved, a link is provided to the department standards for that technology. These standards are the basis for plan review, construction approvals, training, design and installation, and operation and maintenance (O&M), if applicable.

Information is grouped under four technology categories: "Components," "Secondary Treatment Units," "Soil Absorption Fields," and "Pretreatment Devices,"

Each listing includes the following:

- Manufacturer information (listed alphabetically by manufacturer's name);
- The name of the technology;
- Its status: general approval, conditional approval, and project-by-project approval;
- Date of approval;
- Description of the technology;
- Brief comments regarding the approval; and
- A link to the standards that are the basis for plan review, construction approvals, training, design and installation, and operation and maintenance (O&M), when applicable.

Components

Onsite system components are evaluated on a case-by-case basis. Components may include distribution boxes, distribution devices, siphons, pressure manifolds, etc.

CONTACT INFORMATION

Denise H. Wright
dhwright@isdh.in.gov
317-412-2136

Alan M. Dunn
adunn@isdh.in.gov
317-233-7179

Web sites for today's materials and additional resources:

www.eph.isdh.in.gov (Indiana State Dept of Health)

www.iehaind.org (Wastewater Management Committee)

www.iowpa.org (Indiana Onsite Wastewater Professional Assoc.)

(Jan. 28-29, 2013-Camp Camby)

www.extension.purdue.edu/NENV (Purdue University)

www.pumpershow.com (Feb. 25-28, 2013-Indy)