APPLICATION PACKAGE

FEDERAL SECTION 5310
ENHANCED MOBILITY OF SENIORS AND INDIVIDUALS WITH DISABILITES PROGRAM

Funding for small urbanized areas 50,000 – 200,000 population and rural areas below 50,000

Calendar Year 2013

ONE ORIGINAL APPLICATION POSTMARKED BY FRIDAY, MARCH 1, 2013

Brian Jones, Program Manager
Office of Transit
Indiana Department of Transportation
100 North Senate, Room 955
Indianapolis, Indiana 46204-2220
(317) 232-1493
bjones@indot.in.gov

Funding is provided through the Federal Transit Administration Section 5310 grant program.
The Catalog of Federal Domestic Assistance number is 20.513.
INDOT expects to grant about $1 million in federal funds.

Revised November 2012
This application is also available in alternate formats by request

WHAT'S NEW FOR 2013?

The Section 5310 capital grant program now incorporates elements of the old Section 5317 "New Freedom" grant program.

The Indiana Department of Transportation is now only responsible for administering Section 5310 grant funds for small urban areas (50,000 to 200,000 population) and rural areas under 50,000 population. **See map on the following page for counties under INDOT jurisdiction.** An applicant must primarily offer transportation services in the counties named on the map.

The grant application now has two parts:

- The "Traditional" capital vehicle grant program (80% federal share, 20% local cash match), carried out by not-for-profit agencies/eligible public bodies, and

- The "New Freedom" operating/capital grant program. In Indiana, this program is carried out by existing small urban and rural public transportation providers. Funding match for the "New Freedom" portion is 50/50 federal/local for operating expenses and 80/20 federal/local for capital expenses.

At this time, INDOT is only accepting applications for the "Traditional" capital vehicle grant program. The "Traditional" capital vehicle grant application is consistent with previous Section 5310 grant applications.

Funding for recipients involved in the CY 2013 "New Freedom" operating/capital grant program, is coming from previous federal allocations. INDOT has already selected those recipients for CY 2013.

INDOT is offering a Purpose Built ADA vehicle this year. Estimated cost is approximately $50,000. See page 55 for further information.

INDOT Coverage for Federal Section 5310 Grant Program

TABLE OF CONTENTS

		Page
TRADITIONAL CAPITAL VEHICLE GRANT PROGRAM		
	INTRODUCTION	
	A. Description of Section 5310 Program	1
	B. Application Timeline	2
	C. Evaluation Criteria	2
I.	**GENERAL INFORMATION**	
	A. Application Checklist (Exhibit A)	4
	B. Applicant Information (Exhibit B)	4
II.	**PROJECT NEED**	
	A. Project Need	6
	B. Vehicle Inventory (Exhibit C)	7
III.	**FISCAL/MANAGERIAL CAPABILITY**	
	A. Fiscal and Managerial Documentation	8
	B. Estimated Capital Budget (Exhibit D)	9
	C. Estimated Operating Budget (Exhibit E)	10
	D. Recent agency audit or State Board of Accounts Waiver of Audit Requirement	10
IV.	**CERTIFICATIONS**	
	A. Certificate of Incorporation	11
	B. Authorizing Resolution (Exhibit F)	11
	C. Standard Assurances (Exhibit G)	11
	D. Bankruptcy & Litigation Certification (Exhibit H)	12
	E. TIP Approval/Coordination Plan Inclusion (Small Urban Areas only)	12
	F. Inclusion in Coordinated Plan (Small Urban Areas only)	13
V.	**LOCAL COORDINATION EFFORTS**	
	A. Transportation Advisory Committee	16
	B. Other Evidence of Coordination Efforts	17
	C. Provider Notification	18
	D. Prioritizing Applications	19
	E. Public Hearing (public bodies only)	19
	EXHIBITS	
	A. Application Checklist Form	20
	B. Applicant Information Form	21
	C. Vehicle Inventory Form	22
	D. Estimated Capital Budget Form	23
	E. Estimated Annual Operating Budget	24
	F. Authorizing Resolution Form	25
	G. Assurances Form	26
	H. Bankruptcy/Litigation Certification	28
	ATTACHMENTS	
	1. Definition of Terms	
	2. Sample Provider Notification Letter/Notification Provider Form	
	3. Demographic Information	
	4. Local Public Body Certification	
	5. Helpful Tips	
	6. Vehicle Selection Guide	
NEW FREEDOM GRANT PROGRAM		60

SUBMIT ONE BOUND, ORIGINAL APPLICATION POSTMARKED BY FRIDAY, MARCH 1, 2013

INTRODUCTION – "Traditional" Capital Vehicle Grant Program

The purpose of this application package is to provide information, guidance and a format for completing a Section 5310 grant application request. INDOT requires applicants to use this format when developing an application. **Applicants must submit <u>one</u> grant application with original signatures. Please put the application in a three ring binder.**

Answers should be clear, complete and concise. Applicants that need assistance in completing the application may request help from INDOT by calling Brian Jones at (317) 232-1493 or the Indiana Rural Transit Assistance Program (RTAP) at 1-800-709-9981.

A. <u>Description of Section 5310 Program</u>

INDOT awards Section 5310 capital assistance grants to help agencies provide transportation services for seniors and disabled individuals where accessible public transit is not available, insufficient or inappropriate.

There are two categories of subrecipients eligible to receive Section 5310 funding:

1. Private, non-profit corporations (incorporated in Indiana through the Secretary of State).

2. Eligible local public bodies (defined as a "municipal corporation" in Indiana Code 36-1-2-10) that either 1) are approved by INDOT to coordinate services for seniors and individuals with disabilities, or 2) certify to INDOT that no non-profit corporations are readily available to provide the proposed service. ***Public bodies interested in submitting a grant application must request certification of their eligibility to INDOT by January 28, 2013 (see Attachment #4).***

Eligible capital equipment includes vans, modified vans, and small/medium/large transit vehicles. The Indiana Department of Transportation procures all equipment. Approximate delivery time of vehicles is from May through September 2014. Section 5310 funds cover 80% of equipment cost. The remaining 20% cash comes from the grantee.

Your agency must assure that local matching funds (cash) are available to cover 20% of the cost of the equipment you are requesting. The applicant may provide the local match from other federal programs that are eligible to be expended for transportation, with the exception of USDOT/FTA programs. No operating funds are available.

The *Section 5310 State Management Plan* discusses in further detail program, application, operating and reporting requirements. Applicants may obtain copies from INDOT.

B. Application Timeline

To participate in the Section 5310 grant process, your organization must submit a one complete bound (three-ring binder) application to the Indiana Department of Transportation (INDOT), Office of Transit. **APPLICATIONS MUST BE POSTMARKED BY MARCH 1, 2013.**

Activity	Responsibility	Time Frame
INDOT posts applications on-line	INDOT	Nov 2012
Meet with local TAC's	All Applicants	quarterly
Meet with local MPO (Inclusion in Coordination Plan & TIP)	Small Urban Applicant	Jan-Mar, 2013
Insure inclusion in Statewide Coordination Plan	INDOT/Rural Applicant	Jan-Mar, 2013
Request Local Public Body Certification from INDOT	Local Public Body	by Jan 28, 2013
Send provider notification letters	All Applicants	by Jan 28, 2013
Notice for Public Hearing	Local Public Body	February 2013
Application postmarked by	All Applicants	March 1, 2013
Application review	INDOT	Mar-Apr, 2013
Award notification	INDOT	by May 2013
Federal approval	FTA	by Sept. 2013
Execute contracts	INDOT/Grantee	May-Oct, 2013
Send local Share to INDOT	Grantee	October 2013*
Place orders for vehicles	INDOT	November 2013*
Vehicle delivery	Vendors	by Sept. 2014*
Send Annual Vehicle Reports	Grantee	Every January
Grantee compliance reviews	INDOT	Ongoing

* Approximate date

C. Evaluation Criteria

INDOT awards grants on a competitive basis. Requests for funding typically exceed available funds.

INDOT staff and the Indiana Specialized Transportation Advisory Group (ISTAG) review all applications. The ISTAG consists of representatives from state agencies involved in senior and disabled transportation funding and planning. INDOT and the ISTAG will rank applications according to the evaluation criteria stated below. Project applicants will receive notice of their funding status during May 2013.

INDOT will use the following criteria for the evaluation and selection of applications for Section 5310 assistance. Carefully plan the development of your application based on the following criteria. Describe efforts to meet these criteria in as much detail as possible. Statistics, pictures, charts or graphs will help INDOT determine your agency's degree of coordination, project need and fiscal/managerial capability.

Weight Factor	**Evaluation Criteria**
0 - 10 points	Coordination: Current and active participation in local Transportation Advisory Committee, notification of providers, and prioritization of applications. Evidence of other coordination efforts such as service agreements, resource sharing, referral arrangements, coordinated vehicle dispatch, memorandum of understanding, coordination action plans, joint training, etc., with other transportation providers. Application is derived from a local or statewide Coordinated Public Transit – Human Services Transportation Plan.
0 - 10 points	Project Need: Extent and urgency of need for requested capital equipment: Overview of agency programs and service area. Description of proposed service. Age/miles/condition of vehicle(s) to be replaced, fleet condition, accessibility needs & availability of alternative vehicle funding sources. Documentation of need for expansion vehicles (waiting lists, trip denials, estimated trips, ability to pay for expanded services). Demonstration of how the proposed equipment helps address identified senior/disabled transportation service gaps/needs in proposed service area.
0 – 10 points	Fiscal and managerial capability: Capability to provide responsive transportation to senior & disabled public within service area. Ability to comply with contract provisions, provide local capital match (20%), vehicle operation and maintenance funding. Ability to develop and implement a preventative maintenance plan, provide driver training, advertise service, provide administrative oversight and organizational stability. Grantee has included and fully executed all application certifications.

Total possible points: 30

An applicant must score a minimum of 5 points in each category.

INDOT awards funds to the top-ranked applications until available funding runs out.

INDOT will use the above criteria to evaluate each vehicle requested from applicants. INDOT may grant partial awards to applicants requesting two or more vehicles.

INDOT and the review committee will base evaluations on the information included in the application. Insufficient documentation will merit a "0" poor/incomplete rating.

I. GENERAL INFORMATION

A. Application Checklist (Exhibit A)

Applications must include the completed **Application Checklist Form (Exhibit A)** and organize the application materials in the order listed. INDOT requires all organizations filing coordinated applications to submit EACH application item for their agency INDIVIDUALLY. The TAC minutes/evaluation, Provider Notification Letter and Coordination Plan can reflect the coordinated nature of the application.

B. Applicant Information (Exhibit B)

INDOT requires the submission of the Applicant Information Form (Exhibit B) for each organization submitting a Section 5310 application. Guidance for completing this form is provided below:

Item

1-4. General information - name of applicant organization, address, contact person, telephone number and e-mail address.

5. Applicant type - check one.

6. Agency service area (rural/small urban) - check one.

7. Service area for requested equipment - List name(s) of cities, towns and counties that will be served by **the requested equipment**.

8. Number and type of vehicles requested - summary of Estimated Capital Budget (Exhibit D). *Example: 2 vans – one each, mini-van and Type C Van*

9. Total project cost - total cost from Estimated Capital Budget (Exhibit D).

10. Type of service - Demand Response includes dial-a-ride, advance registration and door-to-door specialized service. Fixed Route refers to service following a set route or schedule.

11. Vehicle use - Applicants may request vehicles to replace existing equipment, for the expansion of services, or to start new service.

12. **One way passenger trips** - total number of one-way passenger trips provided during the past calendar year. INDOT defines a one-way trip as one origin to destination trip for each passenger riding in a vehicle. *For example, taking a van with six passengers to the grocery and back to their homes counts as 12 one-way passenger trips.*

13. **Total Vehicle Miles -** The total distance traveled by active passenger vehicles (during the provision of passenger transportation service) during the past calendar year.

14. **Total Operating Expenses -** The total of all transportation operating costs incurred during the past calendar year, excluding expenses associated with capital grants. Expense figures may be unaudited.

15. Ridership characteristics - estimate the percentage, within each group, that your agency serves.

II. PROJECT NEED

A. Project Need: Extent and urgency of need for requested capital equipment. Each applicant must describe its need to replace or expand transportation capacity.

Answer the following questions thoroughly, but briefly (4-8 pages). Answer the questions in order and re-state the question you are answering. Attach vehicle repair history, vehicle pictures or other evidence of vehicle need.

1. Provide a brief overview of your agency programs and service area. If contracting for service, also provide an explanation of the service provider arrangement.

2. Describe the service your agency will provide with the requested equipment (type of service, service hours, days of service, trip purpose, rider eligibility, service area, number of trips, etc.).

3. **IF REQUESTING REPLACEMENT VEHICLES -** Demonstrate urgency of need for equipment requested: age/condition/mileage of vehicle(s) to be replaced, condition of active vehicle fleet, availability of backup vehicles, accessibility needs (refer to Vehicle Inventory - Exhibit C). Attach repair history of major expenses (engine, transmission, cooling, etc), photos and other information as appropriate.

4. **IF REQUESTING EXPANSION VEHICLES -** Provide the following information:

   a. Provide documentation of how need was identified. If applicable, provide the number of trip denials during the past year, or persons on waiting list. How many of these trip denials are individuals with disabilities?
   b. How many annual one-way trips will the additional vehicle(s) provide?
   c. How will your agency pay for the cost (driver wages, fuel, maintenance) of operating the additional vehicle(s)?

5. Briefly describe how the proposed equipment helps to address any identified senior/disabled transportation service gaps/needs in your service area.

6. **To assist INDOT, please provide the last six (6) digits of the Vehicle Serial Number for each vehicle your agency wants to replace.** These numbers must match the vehicle serial numbers on your Vehicle Inventory (Exhibit C).

7. If requesting an regular mini-van, Type B van or Small/Medium/Large Transit vehicle without a lift, *provide a brief explanation why your agency is requesting a non-lift vehicle.*

B. Vehicle Inventory (Exhibit C): For fleets larger than 10 vehicles, copy the form and continue the inventory.

1. Include all **active** passenger transportation vehicles in your fleet. Do not include vehicles that are inappropriate for passenger transportation, or are not in service.

2. **Mark vehicle(s) that this request would replace with an asterisk *.** Make sure to include the vehicle identification number in your Project Need.

3. Identify mileage on the odometer as of December 31, 2012.

4. Report current condition of the vehicle using the scale provided. Your application can discuss "potential" condition at time of replacement in question 3 under Project Need.

5. Total seating capacity should reflect **active** vehicles. Do not include vehicles that are inappropriate for passenger transportation, or are not in service.

III. FISCAL/MANAGERIAL CAPABILITY

This section gives your agency the opportunity to explain you ability to comply with contract provisions, provide local capital match (20%), vehicle operation and maintenance funding, driver training, administrative oversight and organizational stability.

Answer the following questions thoroughly, but briefly (4-8 pages). Answer the questions in order and re-state the question you are answering. Attach other documentation as necessary.

A. Fiscal/Managerial Documentation:

1. Provide the following calendar year 2012 transportation service data:
   - Total one-way passenger trips
   - Total vehicle miles
   - Total operating expenses

   Passenger Trip - One person making a one-way trip from origin to destination. One round trip equals two passenger trips.

   Total Vehicle Miles - The total distance traveled by active passenger vehicles during the past calendar year, during the provision of passenger transportation service. Excludes miles for driver training and vehicle maintenance.

   Total Operating Expenses - The total of all transportation operating costs incurred during the past calendar year, excluding expenses associated with capital grants. Expense figures may be unaudited.

2. **Using the above information, calculate and include operating cost per mile, as well as operating cost per one-way passenger trip.** You may also include other data that reflects the quality and effectiveness of your transportation services.

   To calculate cost per mile: Divide the total cost of providing transportation service last year by the total vehicle miles traveled by the passenger vehicles in your fleet.

   To calculate cost per one-way passenger trip: Divide the total cost of providing transportation service last year by the number of one-way passenger trips provided last year. Be sure to use passenger trip data (each time a person enters a vehicle to go somewhere) not the unduplicated client roster for this calculation.

3. List the number and type of personnel involved in operating and managing your transportation service. This includes all full/part-time/volunteer managers, drivers, dispatchers and mechanics that are employees of your organization or contracted to provide your transportation service.

4. Describe provisions made to assure proper maintenance of vehicles. Identify the person(s) or business responsible for providing vehicle maintenance. Describe your agency's preventative maintenance program or measures (attach preventative maintenance plan if available).

5. Describe provisions made to insure safe operation of vehicles: Driver selection and training policies, recent driver training, safety standards, transportation service policies, insurance coverage, etc.

6. How does your agency advertise availability of vehicle for transportation? Provide documentation of written policies regarding transporting of service animals, personal care attendants and portable oxygen.

7. Identify source, amount and status of 20% match for the requested equipment. Are other requests for this equipment pending?

8. Identify current/anticipated sources of operating funding available to support the operation of the requested equipment throughout its useful life.

B. Estimated Capital Budget (Exhibit D)

1. Eligible equipment under Indiana's Section 5310 program includes:

   - unmodified mini-vans, modified low floor mini vans, raised roof vans and small/medium/large transit vehicles, including accessibility modifications, such as raised roof, lowered step, wheelchair lift and wheelchair securement devices.

2. To help you in estimating your capital costs, we have provided you with estimates for each available vehicle type. This estimate is for model year 2014 vehicles. INDOT staff will review estimated equipment costs before submitting the federal statewide application. INDOT will inform approved applicants of any budget alterations resulting from this review. *Local share payments are based on actual costs.*

3. Vehicle choices reflect an effort to meet applicant needs, given federal procurement guidelines. There might be other equipment more suited for your specific type of service. However, given the need to find a reasonable compromise, the vehicles described in Attachment 6 are the ONLY items available. Please use the considerations discussed in Attachment 6 to select the vehicle that will best meet your agency needs.

4. At this time, INDOT does not offer any diesel or alternative-fuel vehicles.

5. INDOT will provide information on any available vehicle options prior to ordering the vehicles.

6. Regular mini vans, Modified vans (Type B), Small/Medium/Large Transit Vehicles **without** lifts are available, as long as the applicant meets all requirements of the Americans with Disabilities Act (Exhibit G attachment).

7. The local share will be 20% of the TOTAL capital budget. Organizations must document their ability to provide that dollar amount by listing the source(s) of these funds. The applicant must certify in the Authorizing Resolution (Exhibit F) that local funds are available to purchase the requested equipment.

8. Successful applicants must send their local match to the State before the purchase of equipment. **INDOT will request local match funds by October 2013.**

9. The local share may be derived from Federal programs that are eligible to be expended for transportation (*other than DOT/FTA programs*). Examples of types of federal programs that are potential sources of local match include: employment, training, aging, medical, community services, and rehabilitation services.

C. Estimated Operating Budget (Exhibit E)

This should reflect all estimated total transportation operating costs incurred by your agency for ONE year.

This estimate of operating costs is not a request for funds. Operating expenses are not an eligible item under this portion of the Section 5310 program. Your organization will be operating this equipment for longer than one year. Therefore, your organization will need to plan for long-term (5+ years) operation as well.

D. Recent Agency Financial Audit

Provide a copy of your agency's most recent financial audit, or a *Waiver of Audit Requirement* from the State Board of Accounts.

IV. CERTIFICATIONS

A. Certificate of Incorporation

Private non-profit corporations must submit a Certificate of Incorporation to prove private non-profit status. **Send only the page containing the Indiana Secretary of State Seal and approval date.** Do not send amendment pages unless the amendment affects the official name or status of your organization.

A letter from the federal Internal Revenue Service confirming your organization's 501(c)(3) status is not evidence of your agency's status as a not-for-profit corporation incorporated in the State of Indiana.

B. Authorizing Resolution (Exhibit F)

This resolution serves as formal authorization by the governing body of your organization. It certifies the following items.

1. That sufficient funds are available to provide for the local match requirement (20% of capital costs). Applicants may provide local match from other federal programs that are eligible to be expended for transportation, other than USDOT/FTA programs.

2. The individual signing the application forms has the authority to act for the applicant organization.

3. The Board President or Chairperson must sign the Authorizing Resolution.

A **public body** must also certify compliance with the FTA Section 13c Labor Protection requirements if it receives federal financial assistance under Sections 5309, 5307 or 5311. For Public Bodies, the following signatures are required (for the Authorizing Resolution):

Public Body	Signatures	Attest
County	Commissioners (majority)	Auditor
City	Mayor and Board (majority)	Clerk-Treasurer
Town	Pres. and Board of Trustees (majority)	Clerk-Treasurer
Public Trans. Corp.	Board President	Board Secretary

C. Standard Assurances (Exhibit G)

1. INDOT has combined all assurances associated with the Section 5310 application into one form. **Please read each item carefully before signing.** In addition, we recommend that your agency's legal counsel review these assurances.

2. Federal regulations require the Indiana Department of Transportation and each applicant follow the requirements of Exhibit G. Individuals who desire more information about these requirements may contact INDOT.

For Public Bodies, the following signatures are required for Exhibit G:

Public Body	Signatures	Attest
County	Commissioners (majority)	Auditor
City	Mayor and Board (majority)	Clerk-Treasurer
Town	Pres. and Board of Trustees (majority)	Clerk-Treasurer
Public Transp. Corp.	Board President	Board Secretary

D. Bankruptcy/Litigation Certification (Exhibit H)

1. Federal regulations require the Indiana Department of Transportation to ask each applicant the questions in Exhibit H. **Please read each item carefully before signing.**

2. Provide a brief explanation if your agency answers "yes" to any question. Answering "yes" will not automatically disqualify your application. INDOT will review each situation to gauge its relevance to your application.

For Public Bodies, the following signatures are required for Exhibit H:

Public Body	Signatures	Attest
County	Commissioners (majority)	Auditor
City	Mayor and Board (majority)	Clerk-Treasurer
Town	Pres. and Board of Trustees (majority)	Clerk-Treasurer
Public Transp. Corp.	Board President	Board Secretary

E. Transportation Improvement Program (TIP) Approval (small urban areas only)

Applicants from small urbanized areas must contact the local Metropolitan Planning Organization (MPO) to have this project included in their Transportation Improvement Program (TIP).

Applicants from the following areas must receive local TIP approval:

Metropolitan Planning Organization	Counties Covered Under TIP Approval	Phone #	Contact
Madison County Council of Governments (MCCOG)	Madison	765/641-9486	Jerry Bridges
Bloomington/Monroe County Metropolitan Planning Organization (BMCMPO)	Monroe	812/349-3423	Josh Desmond
Columbus Area Metropolitan Planning Organization (CAMPO)	Bartholomew	812/376-2502	Laurence Brown
Kokomo-Howard County Governmental Coordinating Council (KHCGCC)	Howard	765/456-2336	Larry Ives

Tippecanoe County Area Plan Commission (TCAPC)	Tippecanoe	765/423-9242	Doug Poad
Delaware-Muncie Metropolitan Plan Commission (DMMPC)	Muncie	765/747-7740	Hugh Smith
Northwestern Indiana Regional Planning Commission (NIRPC)	LaPorte	219/763-6060	Gary Evers
Michiana Area Council of Governments (MACOG)	Elkhart	574/674-8894	Mary Beth McAdams
West Central Indiana Economic Development District (WCIEDD)	Vigo	812/238-1561	Pat Macke

F. Inclusion in Coordinated Plan (small urban areas only)

Applicants from **small urbanized** areas, or that primarily provide service in a small urban area, must contact the local Metropolitan Planning Organization (MPO) to ensure the proposed project is derived from the local Coordinated Public Transit Human Services Transportation Plan.

The MPO must provide documentation that your grant application is derived from the MPO's Coordination Plan. Your application must include the name of the lead planning agency, the date of adoption of the plan, and/or other appropriate information.

Please note that some MPOs (Evansville, Indianapolis, South Bend and Cincinnati) have chosen to develop coordinated plans for non-urbanized counties adjacent to their urbanized area.

The following counties are part of the local Coordinated Plan developed by an MPO:

Metropolitan Planning Organization	Counties Covered Under Coordinated Plan	Phone #	Contact
Madison County Council of Governments (MCCOG)	Madison	765/641-9486	Jerry Bridges
Bloomington/Monroe County Metropolitan Planning Organization (BMCMPO)	Monroe	812/349-3423	Josh Desmond
Columbus Area Metropolitan Planning Organization (CAMPO)	Bartholomew	812/376-2502	Laurence Brown
Evansville Metropolitan Planning Organization (EMPO)	Warrick	812/436-7833	Kari Akin
Indianapolis Metropolitan Planning Organization (IMPO)	Boone, Hamilton, Hancock, Hendricks, Johnson, Morgan, Shelby	317/327-5135	Kevin Mayfield

Kokomo-Howard County Governmental Coordinating Council (KHCGCC)	Howard County	765/456-2336	Larry Ives
Tippecanoe County Area Plan Commission (TCAPC)	Tippecanoe	765/423-9242	Doug Poad
Delaware-Muncie Metropolitan Plan Commission (DMMPC)	Delaware	765/747-7740	Hugh Smith
Northwestern Indiana Regional Planning Commission (NIRPC)	LaPorte	219/763-6060	Gary Evers
Michiana Area Council of Governments (MACOG)	Elkhart, Kosciusko, Marshall	574/287-1829	Mary Beth McAdams
West Central Indiana Economic Development District (WCIEDD)	Vigo	812/238-1561	Pat Macke
Ohio-Kentucky-Indiana Regional Council of Governments (OKI)	Dearborn (Indiana)	513/621-6300	Bob Koehler

A locally developed, coordinated public transit-human services transportation plan (**"**Coordinated Plan**"**) identifies the transportation needs of individuals with disabilities, older adults, and people with low incomes, provides strategies for meeting those local needs, and prioritizes transportation services for funding and implementation.

A coordinated plan should maximize public transit/human services transportation services collective coverage by minimizing duplication of services. Further, a coordinated plan shall be developed through a process that includes representatives of public and private and non-profit transportation and human services transportation providers, and participation by members of the public.

Non-urbanized applicants: Applicants in **non-urbanized** areas (less than 50,000 population) – INDOT will provide the above requested information (section cite, page references) for each approved applicant (grantee) from the **Statewide Coordination Plan** when INDOT submits the state-wide grant to the Federal Transit Administration (FTA).

Copies of the MPO and Statewide Coordination plans are available at http://www.in.gov/indot/2825.htm

V. LOCAL COORDINATION EFFORTS

This section is your opportunity to demonstrate a strong working relationship with local public and private transportation providers in your service area. Applicants must work together with local transit and paratransit operators in developing a comprehensive transportation network in the project area. Applicants should also seek to coordinate services with other programs for seniors and individuals with disabilities.

A. Transportation Advisory Committee

INDOT requires all applicants to actively participate in their local transportation advisory committees (TACs).

To improve coordinated efforts with local public and private transportation providers, all applicants must participate in a local Transportation Advisory Committee (TAC). **Your area's TAC must meet - at a minimum - on a quarterly basis.**

The TAC should focus on the transportation needs of the seniors, disabled, low income, and other mobility-impaired individuals. In most instances, the TAC will perform in an advisory function, making recommendations to improve transportation services.

Applicants from small urbanized areas can utilize the MPO staff to assist with the development and support of their local Transportation Advisory Committee. MPOs are also a source for technical assistance in completing your grant application.

Applicants from non-urbanized area should take advantage of the coordination and review functions of a local Transportation Advisory Committee.

1. The primary tasks of the TAC are:

    a. To serve as a forum for the ongoing dialogue with community representatives on key issues, strategies, and plans for implementation as identified in the local Coordination Plan;

    b. Engaging in outreach efforts that enhance the coordinated process and identifying the opportunities that are available in building a coordinated system.

    c. Reviewing, commenting and prioritizing on the proposed Section 5310 grant application(s) ability to address any identified senior/disabled transportation service gaps/needs in your service area, or to achieve efficiencies in service delivery, as identified in the local Coordination Plan.

2. Broad-based representation is important to the credibility of the TAC. Suggested membership is as follows:

    - Private for-profit transportation operators (nursing home, taxi, paratransit, ambulance, etc.)

- Private non-profit transportation operators (aging, rehabilitation, mental health, Head Start, Red Cross, schools, community centers, religious organizations, etc.)
- Public transportation operators
- Human service agencies
- Local and regional planners
- Local elected officials
- Seniors and disabled transportation consumers

3. Some areas may have human service coordinating councils that perform the functions of a TAC. These groups are acceptable as a TAC as long as they have the proper representation and perform the activities required of a TAC. All Section 5310 applicants, as a requirement for receiving grant approval, must coordinate transportation services in their area to the fullest extent possible. INDOT expects grantee agencies to play a key role in the development and maintenance of their area's Transportation Advisory Committee.

4. **All previous Section 5310 recipients must document recent committee accomplishments and provide minutes from their quarterly meetings.** New applicants must join or organize their TAC before submitting an application and use their local TAC to begin the coordination of services.

5. To demonstrate TAC involvement, applicants must submit the following documentation:

   - A list of all TAC members including their **name, title** and the **organization/group** they represent.

   - Minutes from all recent TAC meetings detailing the discussion of transportation issues - including coordination, evaluation and prioritization of any Section 5310 grant application(s).

   - Minutes from quarterly TAC meetings conducted during the past year.

B. <u>Other Evidence of Coordinated Effort</u>

As part of a coordinated effort, two or more non-profit organizations from the same service area may coordinate applications for Section 5310 funding. INDOT requires each agency to submit individual grant applications, but the TAC minutes/evaluation, Provider Notification Letter and Project Justification should reflect the coordinated nature of the applications.

Transportation providers may also enter into operational agreements with other agencies (that primarily serve seniors and individuals with disabilities) to maximize the use of project equipment. INDOT will give priority to applications that demonstrate a coordinated transportation network.

INDOT encourages maximum use of vehicles funded under the Section 5310 program. Consistent with the requirements of 49 CFR parts 18 and 19, vehicles are to be used first for program related needs and, beyond the purposes for which a Section 5310 grant are made (e.g. providing service to older adults and people with disabilities not affiliated with their agency), to meet other transportation needs of seniors and individuals with disabilities, to meet other Federal program or project needs, and finally for other local transportation needs.

During the period the vehicle is used to serve the project or program needs for which it was acquired, the subrecipient shall make it available for use on other projects or programs, as long as such other use does not interfere with the service for which the vehicle was originally acquired.

First preference for such other use will be given to other projects or programs sponsored by the Federal Transit Administration (Sections 5311, 5316 and 5317), and second preference will be given to projects or programs sponsored by other Federal agencies.

Finally, vehicles may be used by non-Federally funded providers, first to meet the needs of older adults and people with disabilities, and then to serve the transportation needs of the general public on an incidental basis as long as such service does not interfere with transportation services for older adults and people with disabilities.

Applicants should submit evidence of coordination with other non-profit, for-profit and public transportation providers. This includes service agreements, resource sharing, referral arrangements, coordinated vehicle dispatch, memorandum of understanding, coordination action plans, joint training, etc. (refer to these attachments in the coordination section of your Project Justification).

You may also include any other significant information that describes your community's transportation needs and concerns, such as public hearings, surveys, council meetings, news articles, etc. (refer to these attachments in Section II – Project Need).

C. Provider Notification (Attachments #2A and #2B)

All applicants (non-profit and public bodies) must notify all public and private transit and paratransit providers in their service area. This application package contains a sample notification letter (**see Attachment 2A**).

Your application must include all negative comments or service proposal received as a result of this notification. YOUR AGENCY MUST SEND THESE LETTERS TO TRANSPORTATION PROVIDERS BY JANUARY 28, 2013. This will allow enough time any response. You may send correspondence received after submitting your application to the Indiana Department of Transportation. Organizations filing a coordinated application should send out one letter that details each agency's funding request. Your agency must submit the following documentation with your application:

- Copy (ONE ONLY) of the notification letter sent to providers.

- **Attachment 2B – Notification of Providers Form**. List all private non-for-profit, private for-profit and public transportation providers in your service area. County government, social service organizations, internet search engines and school systems are sources of information about transportation providers. Other providers include school bus operators, taxi companies, public agencies, other private, non-profit organizations, mass transit systems, etc. Check whether your agency received any comments (negative comments or service proposals) back.

- Include with the application, any written negative comments or service proposals.

- Your agency must respond to any written negative comments or service proposals, and include these response(s) in your grant application.

  Your agency can include support letters. The solicitation of support letters is separate from the notification letters mailed out to area providers. Support letters have a minimal role in INDOT's decision to award a grant.

D. Prioritizing Applications (if necessary)

INDOT requires all Transportation Advisory Committees and Metropolitan Planning Organizations to prioritize applications submitted by two or more non-profit organizations/public bodies from their service area. TACs/MPOs must prioritize applications before their submittal to INDOT. *MPOs may prioritize grant applications as part of their local Coordinated Plan.*

TACs/MPOs are responsible for developing their own prioritization criteria. The criteria can include coordination with other providers, community needs, other available funding sources, service hours, service area, vehicle utilization, vehicle mileage, vehicle repair history, vehicle age, average fleet age, vehicle maintenance program, thoroughness and quality of application, fiscal & managerial capacity, etc. TACs/MPOs should evaluate their criteria on an annual basis to ensure consistency with the transportation needs of the seniors and individuals with disabilities.

Multiple applications from the same service area need to include in their application the priority ranking and criteria used by their TAC/MPO. INDOT will use the TAC/MPO prioritization, in conjunction with the evaluation criteria contained within this application package, to make funding decisions.

This prioritizing of applications reflects INDOT's desire to target Section 5310 funds to projects of highest need at the local level.

Evidence of compliance with this requirement includes a description of the prioritization criteria used and a prioritized listing of applications submitted by two or more organizations serving the TAC's area.

E. Public Hearing – Public Bodies only (county, city, town, township, etc.)

After a local public body receives designation from INDOT as eligible to apply for Section 5310 funding, a public body must afford an "adequate opportunity" for a public hearing. This is accomplished by running a notice in a local newspaper. It is not necessary to host a hearing if no one requests that a hearing.

Your **public body** must submit the following documentation with your application.

- A copy of the public hearing notice(s) and publisher's affidavit/proof of publication. Please tape these notices onto an 8 1/2 X 11 sheet of paper.
- Minutes from the public hearing, if held.

Private non-profits applicants do not need to publish a Public Notice.

EXHIBIT A
APPLICATION CHECKLIST

(Organize grant material in this order)

Complete?	Part I - General Information
☐	Application checklist (Exhibit A)
☐	Applicant Information Form (Exhibit B)
	Part II – Project Need
☐	Project Need questions
☐	Additional support materials *(maintenance records, pictures of vehicles to replace)*
☐	Vehicle Inventory (Exhibit C)
	Part III - Fiscal/Managerial Capability
☐	Fiscal/Managerial questions
☐	Estimated Capital Budget (Exhibit D)
☐	Estimated Annual Transportation Operating Cost (Exhibit E)
☐	Most recent audit *(or Waiver of Audit Requirement from State Board of Accounts)*
	Part IV - Certifications
☐	Certificate of Incorporation from Indiana Secretary of State (1st page only)
☐	Authorizing Resolution (Exhibit F)
☐	Standard Assurances (Exhibit G)
☐	Bankruptcy & Litigation Certification (Exhibit H)
☐	TIP/Coordinated Plan inclusion notice (small urban applicants only)
	Part V – Section 1: Coordination Efforts
☐	TAC membership list (organization name/address)
☐	TAC minutes (last 4 quarterly meeting)
☐	Other documented evidence of coordinated effort
☐	Prioritization of multiple applications (if applicable)
	Part V – Section 2: Provider Notification
☐	Provider notification letter (Attachment 2A)
☐	Notification Provider list (Attachment 2B)
☐	Copies of any negative comments and/or service proposals
☐	Applicant response to any negative comments and/or service proposals
☐	Opportunity for public hearing (eligible public bodies only)

One bound application package (compiled in this order) must be postmarked by March 1, 2013.

EXHIBIT B
APPLICANT INFORMATION – 2013 GRANT CYCLE

1. Applicant:
2. Address:
3. Contact Person:
4. Telephone
E-mail address

5. Applicant Type:	**6. Agency Service Area:**
☐ Non-Profit Corporation	☐ Rural (under 50,000 pop)
☐ Eligible Public Body	☐ Small Urban (50,000 – 200,000 pop)

7. Geographical area(s) served by requested equipment:
8. Number and type of vehicles requested:
9. Total Project Cost $ (capital only)

10. The type of service you provide:	**11. Requested vehicle(s) will:**
☐ Demand Response	☐ Replace existing service
☐ Fixed Route	☐ Expand existing service
☐ Other (specify) _____	☐ Start new service

12. Total number of one-way passenger trips provided by your agency in 2012: _____

13. Total Vehicle Miles traveled by your active vehicle fleet in 2012 _____

The total distance traveled by active passenger vehicles (during the provision of passenger transportation service)

14. Total Operating Expenses (cost of providing transportation services) **in 2012:** $_____

(excludes cost of purchasing vehicles)

15. Ridership characteristics (%)	
White	Seniors (age 65 and up)
African American	Disabled (under age 65)
Hispanic	Other (specify)
American Indian	**100% Total**
Asian/Pacific Islander	
Other (including multi-racial)	
100% Total	

EXHIBIT C - VEHICLE INVENTORY

Mark vehicle(s) this request would replace with an asterisk (*)

Year/ Model	Vehicle Type	Vehicle Serial Number	Lift/ Ramp Equipped	Seating Capacity	Capital Funding Sources federal & local	Odometer Mileage as of 12/31/12	Condition of Vehicle (see below)
*04/Example	C	3BOYB1117H517K923	YES	10	Section 5310/United Way	149,799	Fair

Total Seating Capacity of Active Vehicles

(For vehicle fleets larger than 10 vehicles, copy form and continue)

Vehicle Type Abbreviations

CAR	Sedan/Station Wagon
MV	Mini-van
LFMV	Low Floor Mini-van
A	Standard Van
B	High Top van, no lift
C	High Top van with lift
BOVC	Body on Chassis vehicle

Please use the following scale to indicated Condition of Vehicle:

GOOD - Requires standard maintenance
FAIR - Requires frequent minor problems
POOR - Requires frequent major problems
BAD - use presents continued major mechanical problems

EXHIBIT D - ESTIMATED CAPITAL BUDGET

1. Estimated Vehicle Cost	Quantity	Unit Cost		Total
6 passenger unmodified mini-van *(subject to availability)*	*	$25,000	=	
6-4 passenger low-floor minivan (ramp)	*	$36,000	=	
12 passenger raised roof van no lift, Type B	*	$48,000	=	
4 passenger Purpose built ADA vehicle	*	$50,000	=	
6-10 passenger raised roof van with lift , Type C	*	$50,000	=	
8 passenger Small Transit Vehicle with lift	*	$50,000	=	
12 passenger Medium Transit Vehicle with lift	*	$52,000	=	
16 passenger Large Transit Vehicle with lift	*	$55,000	=	
TOTAL ESTIMATED VEHICLE COSTS				

2. Vehicle Options

Delete lift on small, medium or large transit vehicle _____ * -($2,200) _____

Small, Medium and Large transit vehicles without lifts are available, as long as the applicant meets all the requirements of the Americans with Disabilities Act (Exhibit G attachment).

3. TOTAL CAPITAL REQUEST

4. REVENUE

a.	Federal Request (80% of TOTAL)
b.	Local Cash Contribution (20% of TOTAL)

(Local share will be due by October 2013)

Identify the specific sources of funds (public and private) used as local contribution. Applicants may provide local match from other federal programs that are eligible to be expended for transportation, with the exception of USDOT/FTA programs:

5. TOTAL REVENUE (must equal total capital request, line 3)

_____ _____ _____

Prepared by Title Date

EXHIBIT E
ESTIMATED ANNUAL
TRANSPORTATION OPERATING BUDGET*

(not a request for operating funds)

1.	**Expense**	**Expected Cost**
	Driver Salaries and Fringe Benefits	_____
	Other Staff Salaries and Fringe Benefits (Supervisor, Administrative, Dispatch, etc.)	_____
	Vehicle Operation (fuel, oil, tires, maintenance, repair, etc.)	_____
	Vehicle Insurance	_____
	Other	_____
2.	**TOTAL EXPENSE**	_____

3. Revenue

Show whether your organization will cover any of these costs by charging fares or collecting donations from passengers. If yes, specify amount of fare or donation requested for a one-way trip.

Fare/Donation Revenue	**Amount**
_____	_____

4. List and identify other specific sources and amounts of funds that will be available to cover operating costs. The total amount listed below - plus fare revenue - should equal the total operating costs estimated above.

Source of Funds	**Amount**
_____	_____
_____	_____

5. TOTAL REVENUE (must equal total expenses, line 2): _____

_____ _____ _____

Prepared by Title Date

*** Estimated total operating cost for all of your agency's transportation services (excluding vehicle purchases) for ONE year.**

EXHIBIT F

AUTHORIZING RESOLUTION FOR NON-PROFIT ORGANIZATIONS

A resolution of (Name of Organization) recommending approval of an application to the Indiana Department of Transportation for assistance (federal Section 5310) in purchasing equipment to provide transportation services to seniors and individuals with disabilities in (Service Area).

WHEREAS, the (name of organization) is submitting an application to the Indiana Department of Transportation for assistance in purchasing Brief Description of Equipment Requested).

WHEREAS, the contract for financial assistance requires that the (name of organization) obligate local funding equal to twenty percent (20%) of the total project cost, being $ (20% of Cost) of $ (100% of Cost) , to the Indiana Department of Transportation upon execution of the funding contract.

NOW, THEREFORE, BE IT RESOLVED by the Board of Directors of (name of organization) that (organization officer) is authorized to commit organization resources, to execute and file an application for and to contract on behalf of the (name of organization) with the Indiana Department of Transportation to aid in the financing of capital equipment.

_____
(Name of President, Governing Board)

_____
(Signature)

_____
(Date)

EXHIBIT G

Standard Federal Section 5310 Certifications and Assurances FFY 2013

1. The applicant has or will have by the time of delivery, sufficient funds to operate and maintain the vehicles and equipment financed with Federal assistance awarded for its project;

2. The applicant has coordinated or will coordinate to the maximum extent feasible with other transportation providers and users, including social service agencies authorized to purchase transit service;

3. The applicant has complied or will comply with all applicable civil rights requirements;

4. The applicant has complied or will comply with applicable requirements of U.S. DOT regulations regarding participation of disadvantaged business enterprises in U.S. DOT programs;

5. The applicant has complied or will comply with Federal requirements regarding transportation of seniors and individuals with disabilities;

6. The applicant has complied or will comply with applicable provisions of 49 CFR part 605 pertaining to school transportation operations;

7. Viewing its demand responsive service to the general public in its entirety, the applicant has complied or will comply with the requirement to provide demand responsive service to individuals with disabilities, including individuals who use wheelchairs, meeting the standards of equivalent service set forth in 49 CFR 37.77(c), before purchasing non-accessible vehicles for use in demand responsive service for the general public (see Exhibit G attachment);

8. The applicant has complied or will comply with the requirement that its project provide for the participation of private mass transportation companies to the maximum extent feasible;

9. The applicant has complied or will comply with all applicable lobbying requirements for each application (per 49 CFR 20.110) exceeding $100,000;

10. The applicant has complied or will comply with all applicable nonprocurement suspension and debarment requirements;

11. The applicant has complied or will comply with applicable FTA Intelligent Transportation Systems architecture requirements to the extent required by FTA.

12. Will comply with all applicable federal requirements per the FTA Federal Fiscal Year 2013 Annual List of Certifications and Assurances for Federal Transit Administration Grants and Cooperative Agreements, as referenced at http://www.fta.dot.gov/documents/2012_Certs_Appendix_A.pdf

_____

Authorized Representative of Applicant

_____

Date

EXHIBIT G ATTACHMENT
ADA TRANSPORTATION SERVICE PROVISIONS

The Federal Transit Administration and INDOT expect all Section 5310 grantees to meet the following transportation-related provisions of the Americans with Disabilities act:

- Your agency shall transport all common wheelchairs and their users. "Common" wheelchairs fit on a 30"x 48" lift platform, weigh under 600 lbs. (including user) and include 3-wheel scooter mobility devices.

- Wheelchair users must permit chairs to be secured. The Grantee must provide designated securement locations.

- Service cannot be denied because a "common" wheelchair cannot be satisfactorily secured or restrained by the vehicle's securement system.

- The grantee may recommend to a user of a wheelchair that the individual transfer to a vehicle seat. However, the grantee may not require the individual to transfer.

- Where necessary, or upon request, the grantee's personnel shall assist individuals with disabilities with the use of the securement systems, ramps and lifts. If it is necessary for the personnel to leave their seats to provide this assistance, they shall do so.

- The grantee shall permit individuals with disabilities who do not use wheelchairs, including standees, to use a vehicle's lift or ramp to enter the vehicle.

- The grantee shall permit service animals and personal care attendants to accompany individuals with disabilities in vehicles and facilities.

- The grantee shall make available to individuals with disabilities adequate information concerning transportation services and schedules. This obligation includes making communications available in accessible formats "usable to" the individual.

- The grantee shall permit a passenger who uses a lift to exit a vehicle at any designated stop, unless; the lift cannot be deployed, the lift will be damaged if it is deployed, or temporary conditions at the stop (not under control of the grantee) preclude the safe use of the stop by all passengers.

- The grantee shall allow passengers to travel with a respirator or portable oxygen supply, consistent with the applicable Department of Transportation rules on the transportation of hazardous materials (49 CFR subtitle B, Chapter 1, Subchapter C).

- The Grantee shall ensure that adequate time is provided to allow individuals with disabilities to complete boarding or disembarking from the vehicle.

- The grantee shall maintain in operative condition those features of facilities and vehicles that are required to make them readily accessible to, and usable by, individuals with disabilities. These features include, but are not limited to, lifts (and other means of access to vehicles), securement devices, elevators, signage and systems to facilitate communications with individuals with impaired vision or hearing.

- Accessibility features shall be repaired promptly if they are damaged or out-of-order. When an accessibility feature is out-of-order, the grantee shall take reasonable steps to accommodate individuals with disabilities who would otherwise use the feature. This does not prohibit isolated or temporary interruptions in service or access due to maintenance or repairs.

- Grantees must treat individuals with disabilities with respect and courtesy, with appropriate attention to the differences among people and disabilities.

- All personnel must be "trained to proficiency", appropriate to their duties.

- For further information regarding ADA, please reference http://www.fta.dot.gov/civilrights/12325.html

EXHIBIT H

BANKRUPTCY & LITIGATION CERTIFICATION

If your agency answers "Yes" to any of the questions, please provide a brief explanation. *Failure to answer these questions will delay processing of your grant application. Answering "N/A" is an insufficient answer for these questions.*

Yes	No	**Question**
☐	☐	Has your agency (or the contracted provider) ever declared bankruptcy?
☐	☐	Is your agency (or the contracted provider) in litigation or has any claims of violation of law or regulations filed against it (during the past three years)?
☐	☐	Is your agency (or the contracted provider) had been named in any lawsuits or complaints, with respect to service or other transportation benefits, which allege discrimination on the basis of disability (during the past three years)?
☐	☐	Is your agency (or the contracted provider) been named in any lawsuits or complaints, which allege discrimination on the basis of race, color, or national origin with respect to service or other transportation benefits (during the past three years)?
☐	☐	Has your agency (or the contracted provider) participated in a civil rights compliance review within the past three years?

If "yes" to any questions above, provide an explanation (use additional paper if necessary):

Answering "yes" will not automatically disqualify your application. INDOT will review each situation to gauge its relevance to your application.

_____
Authorized Representative of Applicant

_____
Date

APPLICATION ATTACHMENTS

FEDERAL SECTION 5310 GRANT PROGRAM

1. **Definition of Terms**

2. **Sample Notification Letter/ Notification of Providers Form**

3. **Demographic Information**

4. **Local Public Body Certification**

5. **Helpful tips**

6. **Vehicle Selection Guide**

ATTACHMENT 1
DEFINITION OF TERMS

This attachment identifies some common terms and definitions used in the Section 5310 program.

Eligible applicant - a private non-profit corporation or eligible public body that provides, or wants to provide, transportation services to seniors or individuals with disabilities.

Private non-profit corporation - an organization incorporated as a private non-profit corporation with the Indiana Secretary of State.

Eligible public body - to be eligible, a public body must either:

(a) provide INDOT with letters from private non-profit organizations and for-profit providers (that transport seniors and individuals with disabilities) in the proposed service area stating that they do not have the necessary resources to provide the proposed transportation service, and/or

(b) must be already, or plan to, receive federal and/or state funds to carry out human service programs. An example would be a county department on aging that the State has identified as the lead human service agency to provide services funded by multiple Federal or State human service programs.

The eligible public body must also meet the definition of a municipal corporation as defined in Indiana Code 36-1-2-10.

Senior - an individual who is 65 years of age or older.

Individual with a Disability - means an individual who, because of illness, injury, age, congenital malfunction, or other incapacity or temporary or permanent disability (including an individual who is a wheelchair user or has semi-ambulatory capability), cannot use effectively, without special facilities, planning, or design, public transportation service or a public transportation facility. 49 U.S.C. 5302(a)(5).

Rural area - any area outside an urbanized area with a population of less than 50,000.

Operating cost/mile - Ratio equating total transportation service operating cost to total number of passenger service miles. The ratio may be influenced by high repair costs and gas mileage.

Operating cost/trip - Ratio equating total transportation service operating cost to total one-way passenger trips (each time a person enters a vehicle to go somewhere). The ratio may be influenced by the type of trip (in-town trips versus long distance medical trips).

Small urbanized area - an area in the State specified as an Small urbanized Area by the U.S. Bureau of Census with a population between 50,000 to 200,000.

ATTACHMENT 2A

[Your agency must mail this by January 28, 2013. Please note that INDOT has deleted the provider response form, as this is just a notification letter]

SAMPLE PROVIDER NOTIFICATION LETTER

TO: All Public and Private Transit and Paratransit Providers Operating in Your Service Area

FROM: (your organization)

DATE: (date)

The Indiana Department of Transportation has made available federal funds, through the Section 5310 Specialized Transportation Capital Assistance Program, for the acquisition of equipment to provide specialized transportation to seniors and individuals with disabilities.

Our organization is submitting an application. We intend to request assistance to:

(Describe number and type of equipment requested.)

(Describe need/justification for request.)

(Describe clients, type of service, route structure, number of trips, hours of day, days of week, etc.)

For additional information, you may contact _____(your name)_____ of __(your organization)____ at _(telephone)__. A draft of the application package is available for review at __(your organization)____, ___(your address)___.

If you wish to comment or want additional information on this application, our agency must receive your written request **no later than February 8, 2013**.

Sincerely,

Agency Director

ATTACHMENT 2B

NOTIFICATION OF PROVIDERS FORM

Letters were sent on (date) to the following providers in (our service area). Indicate responses (if any) received. Provide copies of any negative comments or service proposals, and your agency response to them.

Agency Name	Address	Response Received	
		Yes	No
		☐	☐
		☐	☐
		☐	☐
		☐	☐
		☐	☐
		☐	☐
		☐	☐
		☐	☐
		☐	☐
		☐	☐
		☐	☐

ATTACHMENT #3

DEMOGRAPHIC INFORMATION

Information regarding the number of seniors age 65 and above can be found at:

http://www.stats.indiana.edu/uspr/a/us_profile_frame.html

http://www.stats.indiana.edu/topic/population.asp

Starting in 2010, the US Census no longer collects disability information by state and county levels.

Nation-wide information regarding disability can be found at the following website:

http://factfinder2.census.gov/faces/tableservices/jsf/pages/productview.xhtml?pid=ACS_11_1YR_S1810&prodType=table

ATTACHMENT #4
LOCAL PUBLIC BODY ELGIBILITY

In order to apply, a Local Public Body (defined as a "municipal corporation" in Indiana Code 36-1-2-10) **shall satisfy <u>one</u> of the following conditions [(a) <u>or</u> (b)]:**

(a) **LOCAL PUBLIC BODY - DESIGNATED TRANSPORTATION COORDINATOR (OF TRANSPORTATION SERVICES FOR SENIORS AND INDIVIDUALS WITH DISABILITIES)– By January 28, 2013 -** Is approved by the Indiana Department of Transportation Office of Transit (see Sample Letter Requesting Designation – page 36) to be the coordinator of transportation services to seniors and individuals with disabilities in the proposed service area, after first being approved by:

1. **Rural area less than 50,000 population -** A county or multi-county not-for profit agency involved in providing services to seniors and/or individuals with disabilities; or

2. **Small urbanized area 50,000 to 200,000 population -** A Metropolitan Planning Organization (MPO).

The Local Public Body must provide documentation showing that one of the above-mentioned agencies approved the Local Public Body as the coordinator of transportation services for seniors and individuals with disabilities in the proposed service area. A Local Public Body may not designate itself as the coordinator of these services.

(b) **LOCAL PUBLIC BODY - NO PRIVATE NON-PROFIT AVAILABLE – By January 28, 2013**, certify to the Indiana Department of Transportation Office of Transit (see Sample Letter Requesting Certification of Eligibility – page 37) that no private, nonprofit organizations in the proposed service area are readily available to provide transportation services to seniors and individuals with disabilities in the proposed service area and provide all of the following documentation:

1. Copies of the Availability of Private Non-Profit Letter (page 38) are sent to all known private, nonprofit organizations, both within the county wherein such organizations are situated and in adjacent counties, along with copies of any resulting correspondence. Mailing list and responses are recorded on the Availability of Private Non-Profit Responses Form (page 39).

2. A certified copy of a public notice (see Notice to Private Non-Profit Organizations of Intent to Apply on page 40) published in the appropriate official county newspaper, both within the county wherein such organizations are situated and in adjacent counties, along with copies of any resulting correspondence.

The Local Public Body must meet all other requirements of the Section 5310 grant program.

INDOT will review all requests and notify local public bodies by February 8, 2013.

SAMPLE LETTER REQUESTING CERTIFICATION OF ELIGIBILITY

LOCAL PUBLIC BODY – DESIGNATED AS TRANSPORTATION COORDINATOR

Directions: Send for approval by January 28, 2013.

(Insert Date)

Section 5310 Program Manager
Office of Transit
Indiana Department of Transportation
100 North Senate, Room N955
Indianapolis, IN 46204

Dear Section 5310 Program Manager:

The (name of local public body), requests to be designated an Eligible Applicant for assistance under the federal section 5310 Program. Our (name of local public body) is approved as the coordinator of transportation services for seniors and individuals with disabilities by one of the following:

- A county or multi-county not-for profit agency involved in providing services to seniors and/or individuals with disabilities; or

- A Metropolitan Planning Organization (MPO)

Attached is a copy of documentation showing that one of the above-mentioned agencies approved the (name of Local Public Body) as the coordinator of transportation services for seniors and individuals with disabilities in the proposed service area.

If you have any questions, please call (name and telephone number of contact person).

Sincerely,

(Name of Public Official)
(Title of Public Official)

Attachment (from county or multi county not for profit, or MPO)

SAMPLE LETTER REQUESTING CERTIFICATION OF ELIGIBILITY

LOCAL PUBLIC BODY – NO PRIVATE NONPROFIT AVAILABLE

Directions: Send for approval by January 28, 2013.

(Insert Date)

Section 5310 Program Manager
Office of Transit
Indiana Department of Transportation
100 North Senate, Room N955
Indianapolis, IN 46204

Dear Section 5310 Program Manager:

The (name of local public body), a unit of county government, requests to be designated an Eligible Applicant for assistance under the federal Section 5310 Program. We have met the eligibility conditions as noted in the Section 5310 grant application.

Attached is a copy of the letter sent to all known private, nonprofit organizations in (county name) and adjacent counties, soliciting interest in providing transportation services for seniors and individuals with disabilities in (name) County. The letter was sent on (date). The following is attached:

(a) A list of agencies receiving the letter;
(b) Request(s) for further information we received;
(c) Our response(s) to the request(s) for further information;
(d) A statement that we received no responses in opposition to the (name of local public body) becoming eligible to receive assistance from Sec. 5310; and
(e) Certified copies of the public notices published in the respective county newspapers with the largest circulation.

No responses were received as a result of these public notices.

If you have any questions, please call (name and telephone number of contact person).

Sincerely,

(Name of Public Official)
(Title of Public Official)

AVAILABILITY OF PRIVATE NON-PROFIT LETTER

(Date)

(Name)
(Address)

Dear _____:

The _____, a municipal corporation, is requesting approval by the Indiana Department of Transportation as an eligible applicant in order to receive assistance under the federal Section 5310 Program for providing transportation services to seniors and individuals with disabilities in _____ County. A notice of intent has been published.

A condition of eligibility is that no private, non-profit organizations as specified in the proposed service area (list service area) _____are readily available to provide transportation services to seniors and individuals with disabilities in _____ County. This letter is being sent to private, non-profit organizations in _____ County and adjacent counties to solicit interest in providing transportation services for seniors and individuals with disabilities in _____ County.

Your written objections to this certification or requests to us for additional information must be received, or postmarked, no later than [_____, 20__

If you have any questions, please feel free to call me at _____. You may also wish to contact the Indiana Department of Transportation, (Brian Jones 317-232-1493).

Sincerely,

(Signature)
(Title)

AVAILABILITY OF PRIVATE NON-PROFIT RESPONSES FORM

Letters were sent on (date) to the following private, non-profit organizations in (county) and adjacent counties. Indicate responses (if any) received. Indicate any opposition to certification of (the local public body). Attach copies of any responses and related correspondence.

Name	Address	Response Received	
		Yes	No
		☐	☐
		☐	☐
		☐	☐
		☐	☐
		☐	☐
		☐	☐
		☐	☐
		☐	☐
		☐	☐
		☐	☐
		☐	☐

NOTICE TO PRIVATE NON-PROFIT ORGANIZATIONS OF INTENT TO APPLY

Directions: Publish in official county newspaper.

The (local public body/municipal corporation), hereby provides notice that it is requesting from the Indiana Department of Transportation certification as a local public body eligible for assistance under the federal Section 5310 Program for the purpose of providing transportation services for seniors and individuals with disabilities in _____ County.

Individuals or agencies wishing to comment, to request transportation service, to provide transportation service for the (local public body name), or to receive additional information concerning this certification, should contact (name of contact person, telephone number, address).

Formal requests for additional information must be made in writing by [_____, 200__].

ATTACHMENT 5
HELPFUL TIPS

1. Make sure you submit a complete application. Use the checklist provided in the grant application package. Submit your materials in the order of the checklist (Exhibit A).

2. What is the best way to start filling out the grant application? By looking at a copy of your agency's (or another agency's) most recent grant application, as well as the approval/rejection letter received from INDOT regarding that application. This will also remind you which vehicle(s) your agency may have already replaced through the Section 5310 program.

3. **Make sure you do not apply to replace an existing vehicle already replaced by a previous Section 5310 grant.** If you are not sure, call the Section 5310 Program Manager and request a check of INDOT's records.

4. Replacement of unsafe vehicles is a priority; however, the process is competitive. Vans replaced during last year's application cycle averaged 140,000 miles on the odometer. By the time the replacement vehicle arrives (1 - 1½ years later) they may exceed 170,000 miles.

5. INDOT will consider applications for expanded and new services, funds permitting.

6. Your local Transportation Advisory Committee (TAC) must meet on a quarterly basis. This means that 4 meetings in January & February <u>do</u> <u>not</u> meet this requirement. Send copies of minutes from all meetings that discuss this proposal AND evidence that the group met throughout the year.

7. "We hold TAC meetings but no one shows up!" Then document your efforts to establish a TAC and hold meetings. A summary of coordinated activity accomplished throughout the year is a helpful supplement to meeting minutes. Coordinated efforts may include; joint driver training, sharing vehicles, joint outreach efforts, transporting each other's clients, joint purchasing, making referrals to other providers, contracting with others to provide service, etc.

8. When can we expect vehicle delivery? Up to one and one-half years after your grant award (by September 2014). If you need a vehicle quickly, or want a specific make/model, you should seek another source of funding. INDOT can only award vehicle contracts to the lowest responsible bidder and cannot honor brand preferences.

9. You may also request a copy of the *Section 5310 Management Guide* that provides additional detail on the contractual obligations associated with the award of a Section 5310 capital assistance grant. These are available from INDOT.

10. If you're not sure what vehicle type is suitable for your agency, please read Attachment 6 – Vehicle Selection Guide.

11. INDOT has a Section 5310 grantee review process. If you are interested in what we will review, request a Section 5310 Program Review from INDOT.

    Our most common "finding" is the lack of a documented, daily vehicle pre-trip inspection and preventive maintenance procedures for vehicle lifts and accessibility equipment. The *Indiana Preventive Maintenance Manual* is an excellent resource that addresses these issues. Call INDOT or RTAP to receive a copy.

If you have any questions, please contact Brian Jones at 317-232-1493
(bjones@indot.in.gov) or the
Indiana Rural Transit Assistance Program at 1-800-709-9981

ATTACHMENT 6

VEHICLE SELECTION GUIDE
MODEL YEAR 2014 VEHICLE
FOR SECTION 5310 APPLICANTS

Selecting the proper vehicle to meet your unique service needs is an involved process and one that deserves considerable thought, whether this is your first vehicle, a replacement purchase, or a fleet expansion. There are many issues that your agency must consider, most of them involving tradeoffs of one kind or another. The relative importance of each issue will vary by agency.

There are five primary issues that require consideration in selecting the proper vehicle:

- Accessibility
- Capacity
- Road conditions
- Type of service
- Vehicle cost

There are also secondary issues that will further influence the selection of a vehicle:

- Commercial Drivers License
- Cost to operate the vehicle
- Level of comfort
- Vehicle storage

The following questions - through a process of elimination - are designed to help you decide which type of vehicle is appropriate. By answering the questions, you will be able to quickly eliminate from consideration those vehicles that are inconsistent with your agency's needs.

AVAILABLE VEHICLES

INDOT offers a wide variety of vehicle types and seating arrangements to meet most every need. Vehicles range from mini-vans configured to carry as few as four passengers, through the Large Transit Vehicle capable of carrying up to 16 adult passengers. This section offers a brief explanation of the vehicles offered by INDOT through the Section 5310 program. **The vehicles mentioned in this guide are for the 2014 model year.** Further descriptions and dimensions are available in the various tables contained within this document.

Vehicles available through the Section 5310 program include:

- **6 passenger regular mini-van:** Basically a Dodge Caravan. Subject to availability.

- **Low floor mini-van:** These vehicles have a capacity with accommodation for up to six ambulatory passengers, or three ambulatory passengers and two wheelchair passengers. They are the most maneuverable and fuel-efficient of the lift-equipped vehicles offered through the Section 5310 program. A CDL is not required to operate this vehicle.

- **Purpose built ADA vehicle:** This vehicle has a capacity of three ambulatory passenger and one/two wheelchairs. A CDL is not required to operate this vehicle.

- **Modified Van without lift (Type B):** This vehicle type has a 30 inch raised roof and modified seating arrangement to allow for easy access and the ability to stand up in the vehicle. This van can accommodate up to 12 passengers. A CDL is not required to operate this vehicle.

- **Modified Van with lift (Type C):** This vehicle type has a 30 inch raised roof and modified seating arrangement to allow for easy access and the ability to stand up in the vehicle. This van can accommodate up to six passengers (with lift and one wheelchair tiedown), or up to ten passengers without wheelchair tie-downs in use. A CDL is not required to operate this vehicle.

- **Small Transit Vehicle – (STV):** The Small Transit Vehicle (138 inch wheelbase) can accommodate up to 8 passengers, plus two wheelchair tie-downs. These vehicles are built on a body-on-van-chassis. The body is constructed using a steel cage and fiberglass panels. The STV **does not** require a CDL.

- **Medium Transit Vehicle (MTV):** The Medium Transit Vehicle (158 inch wheelbase) can accommodate up to 12 passengers, plus two wheelchair tiedowns. These vehicles are built on a body-on-van-chassis. The body is constructed using a steel cage and fiberglass panels. The MTV ***may or may not*** require a CDL, depending on the seating configuration.

- **Large Transit Vehicle – (LTV):** A Large Transit Vehicle (178 inch wheelbase) can accommodate up to 16 passengers, plus two wheelchair tie-downs. These vehicles are built on a body-on-van-chassis. The body is constructed using a steel cage and fiberglass panels. The LTV **does** require a CDL.

PRIMARY ISSUES

1. **Do you need an accessible vehicle?** If your agency will use this vehicle to transport individuals with disabilities who use wheelchairs, your agency will need to purchase a vehicle with an accessible package including a lift or a ramp, wheelchair tiedowns, and other related equipment.

   All Section 5310 applicants are required to purchase lift-equipped vehicles, unless the applicant can demonstrate that its system, when viewed in its entirety, provides equivalent levels of service to individuals with disabilities and other passengers. Standards for equivalent service include 1) response time, 2) fares, 3) geographic area of service, 4) hours and days of service, 5) trip purpose restrictions or priorities, 6) availability of information, 7) reservations capability, and 8) constraints on capacity or service availability.

   Accessible vehicles purchased with federal Section 5310 funding must meet all ADA standards. This means a minimum of two forward-facing tie-down positions for vehicles in excess of 22 feet (*Medium and Large Transit Vehicles*) and one forward-facing tie-down for vehicles under 22 feet (*Low floor mini-van, Purpose built ADA Vehicle, Modified Van and Small Transit Vehicle*).

   The following vehicle types come standard with an accessibility package:

   - Low floor mini-van
   - Purpose built ADA vehicle
   - Modified van (Type C)
   - Small, Medium or Large Transit Vehicles

The following vehicles can be ordered **without** an accessibility package:

- Mini-van
- Modified van* (Type B)
- Small, Medium or Large Transit Vehicles*

** This vehicle appears on both lists because it can be ordered with or without the accessibility package*.

2. **What are your capacity needs?** You must consider a number of items regarding vehicle capacity needs. Table One provides a summary of the various capacity configurations for each vehicle type.

   Note: Available floor plans are shown on pages 53 through 60.

   The following discussion will assist you in determining your capacity needs:

- *What is the maximum number of individuals this vehicle will transport at the same time on a regular basis?* It is important to determine what your routine needs are, rather than exceptions such as large group trips that occasionally occur. In most cases, alternatives are available to meet occasional large group needs. Options include: renting or leasing another vehicle; coordinating with or borrowing from another provider; contracting with a private provider; or using multiple smaller vehicles. Buying too large a vehicle can result in higher than necessary purchase price and fuel, maintenance and insurance costs.

- *What is the mix of clients this vehicle will transport?* You must determine how many ambulatory and non-ambulatory riders your agency will transport at the same time on a regular basis. Again, it is important to identify your standard needs, rather than occasional demands. Each accessible vehicle offers a variety of floor plans including single or multiple wheelchair tiedowns.

- *Will the vehicle I select constantly be loaded to capacity?* While selecting too large a vehicle can be wasteful and more expensive to operate, the increased wear and tear of vehicles loaded to capacity can diminish the useful life of the vehicle. Vehicles loaded to capacity may also be less safe, as they take longer to stop and tend to handle more sluggishly.

- *What are my future needs?* The period from initial investigation until vehicle delivery can be as long as a year and a half. Once you receive your vehicle, it will be used for a number of years. Therefore, your capacity needs should reflect the anticipated future demand and rider mix.

TABLE ONE: ESTIMATED VEHICLE CAPACITIES

(ambulatory seating and wheelchair tie-down combinations)

	# of Wheelchair Tie-down Positions				
	0	1	2	3	4
	# of Ambulatory Seats				
Mini-van	6	**	**	**	**
Low floor mini-van	6	4	3	**	**
Modified Van ***without*** lift *(Type B)*	12	**	**	**	**
Purpose built ADA vehicle	3	4	3	**	**
Modified Van ***with lift*** *(Type C)*	10	6	4	2	**
Small Transit Vehicle	13	**	8	**	**
Medium Transit Vehicle	16	**	12	**	**
Large Transit Vehicle	18	**	14	8	4

** Not available

3. **On what type and condition of roads will the vehicle operate?** There are a number of environmental factors that must be taken into account when determining which vehicle is right for your needs. Several scenarios are discussed below. While they are not all-inclusive, you should get an idea of how to determine which vehicles can handle you particular needs. Again, vehicle selection should be based on standard or recurring needs, not the occasional or potential occurrence.

- *Rural areas* - These areas are generally characterized by narrow, twisting roads and often involve travel on unimproved roads (i.e. gravel and dirt) surfaces. Travel distances tend to be greater and speeds higher than in other types of service areas. The largest vehicle - the *Large Transit Vehicle* - is probably not suited for these conditions, since they are wider than other vehicles, making them less maneuverable and more unwieldy on small roads.

  Modified Vans (both Type B and C), and Small, Medium and Large Transit Vehicles have high roofs (minimum 8 feet, 10 inches) which may preclude operation in areas where they are likely to encounter overhanging objects, such as tree limbs. The lowered floor height of the *Low floor mini-van* reduces ground clearance and may inhibit the ability to use this vehicle on unimproved road surfaces.

  Suggested vehicles to serve rural areas include:

  * Mini-van
  * Low floor mini-van*

  * *Not suggested where ground clearance must be considered.*

- *Residential Areas* - Residential neighborhoods often have narrow, dead end streets and cul-de-sacs. While height is general not a problem, width and length can make for difficult maneuvering in tight areas, especially where backing up is required or where parked vehicles may be present. The *Large Transit Vehicle* therefore, is <u>not</u> well suited for serving many residential neighborhoods. All other vehicles should be fine in these areas.

  Vehicles suggested to serve residential areas include:

  * Mini-van
  * Low floor mini-van
  * Modified Van *(both Type B and C)*
  * Small Transit Vehicle

- *Cities and towns* - These areas generally have through streets (i.e. not dead-ends or cul-de-sacs) of sufficient width to accommodate the vehicle mentioned in this guide. However, height may be a problem in accessing parking garages, apartment building entrance overhangs, and other similar structures. If height is not a problem, all vehicles should work well in these areas. If height needs to be restricted, the *mini-van*, *Low floor mini-van* and the *Purpose built ADA vehicle* are suggested.

Suggested vehicles for cities and towns include:

* All vehicle types, except where vehicle height is restricted to less than 8 feet, 10 inches.

4. **What type of service will the vehicle provide?** Generally speaking, there are two types of service are provided, though combinations are possible. The type of service provided and the vehicle selected are also inter-related with the clientele served (e.g. seniors, individuals with disabilities, etc.) and the nature of the service area (rural, residential, city/town).

- *Demand Response* - also known as paratransit, this service involves door-to-door or curb-to-curb transportation with routings that change daily in response to rider demands. For the most part, clientele served include seniors and individuals with disabilities in both urban and rural areas. Since most demand response transportation involves many different origins and destinations and/or service to riders with special needs, in-vehicle ride times can be quite long and unpredictable. To avoid excessive ride times, fewer individuals must be served at one time, thereby making large capacity vehicles unnecessary and potentially wasteful.

Suggested Vehicles for demand response service include:

* Mini-van
* Low floor mini-van
* Purpose built ADA vehicle
* Modified Van *(both Type B and C)*
* Small Transit Vehicle

- *Repetitive Route* - This service operates over the same routes as long as the clientele is constant. A change in clients would mean a change in routes. Service involves many origins and one destination.

Suggested vehicles for repetitive route service include:

* Modified Van *(both Type B and C)*
* Small, Medium and Large Transit Vehicles

5. **How much will the vehicle cost?** Most Section 5310 applicants have limited budgets, and are restricted in their spending to purchase new vehicles. Table Two shows the cost for each type, along with the grantee's local (20%) share.

   If you need the lowest cost vehicle possible, the following are suggested:

   * Mini-van
   * Low floor Mini-van

   If you can afford a more expensive vehicle and it meets your other selection criteria, the following are suggested:

   * Purpose built ADA vehicle, Modified Van-Type B and C
   * Small, Medium and Large Transit Vehicles

TABLE TWO: MODEL YEAR 2013 ESTIMATED VEHICLE COSTS
(Total Cost/Grantee's Share)

	Total Cost	**Grantee's Share**
Unmodified mini-van	$25,000	$5,000
Low floor mini-van	$36,000	$7,200
Purpose built ADA vehicle	$50,000	$10,000
Modified Van **without lift** *(Type B)*	$48,000	$9,600
Modified Van **with lift** (Type C)	$50,000	$10,000
Small Transit Vehicle	$50,000	$10,000
Medium Transit Vehicle	$52,000	$10,400
Large Transit Vehicle	$55,000	$11,000

SECONDARY ISSUES

Depending on your situation, the secondary issues may prove to be the deciding factors regarding which vehicle you ultimately choose. Consequently, the implications of each issue should be given full consideration during the vehicle selection process.

6. **Will drivers need a Commercial Drivers License (CDL)?** Drivers must obtain a CDL whenever they operate a vehicle originally configured to transport more than 15 persons

including the driver. Obtaining a CDL is a time-consuming and rigorous process. Applicants using volunteer drivers or experiencing high driver turnover should strongly consider their ability to use CDL drivers.

If you cannot hire CDL drivers, the following vehicles are suggested:

* Mini-van
* Low floor mini-van
* Purpose built ADA vehicle
* Modified Van (both Type B and C)
* Small Transit Vehicle
* Medium Transit Vehicle (depending on configuration)

7. **How much will the vehicle cost to operate?** The heavier and higher the capacity of the vehicle, the more it will cost to operate. *Modified Vans (both Type B and C) and Small, Medium and Large Transit Vehicles* tend to consume more fuel, have higher maintenance costs, and are more expensive to insure than small ones. Additionally, the *Medium and Large Transit Vehicle* requires drivers with CDLs, who may require higher wages.

If the lowest operating costs are an important issue, the following vehicles are suggested:

* Mini-van
* Low floor mini-van
* Purpose built ADA vehicle

8. **What level of comfort do your clients need?** Passenger comfort and interior mobility are important considerations. The type of clients you serve (e.g. seniors, individuals with disabilities, etc.) and the type of service you operate (demand response or fixed route) will have a large bearing on your selection. Elements to consider include:

- *Interior mobility* – Generally, the smaller the vehicle, the more difficult it will be to maneuver within the vehicle and the fewer seating options available. The standard interior dimensions of the *Low floor mini-van, Purpose built ADA vehicle* and the *Modified Van (both Type B and C)* will often require passengers to disembark or climb over others to exit the vehicle in services where riders board and alight at different locations.

  Additionally, the *Mini-van* does not have a raised roof or lowered floor, requiring riders to stoop more than in other vehicles. Passenger will also need to stoop inside the *Low floor mini-van*.

  For wheelchair users (especially those riders with large wheelchairs, or whose foot rests

stick out), maneuverability is more restricted in *Low floor mini-vans, Purpose built ADA vehicle* and *Modified Vans (Type C)* than in larger vehicles. This may necessitate unloading one rider before unloading another, then reloading the one taken off first.

- *Step Height* – The height of the first step is an important consideration, especially when dealing with frail individuals.

- *Ride Quality* – This factor will depend on the vehicle size and number of riders transported at any given time. Small vehicles (*Mini-van, Low floor mini-van, Purpose built ADA vehicle* and *Modified Van {both Type B and C})* tend to provide a comfortable ride under most circumstances. Conversely, the *Small, Medium and Large Transit Vehicles* tend to provide a more jarring ride under light loads.

- *Flip Seats* – These are fold-down seats, usually forward-facing, installed at wheelchair tiedown locations. They can be used to increase the seating capacity of the vehicle when the wheelchair tie-downs are not needed. Generally, they are less comfortable than standard seats and should be considered for occasional use only. The more wheelchair tie-down positions ordered, the fewer standard seats are provided. Seniors may consider flip seats more uncomfortable than other clients.

If overall passenger comfort and interior mobility are essential to your vehicle selection, the *Small, Medium and Large Transit Vehicles* are suggested.

If overall passenger comfort and interior mobility are not essential to your vehicle selection, the *Low floor mini-van. Purpose built ADA vehicle, and the Modified Van (both Type B and C* are suggested.

The approximate vehicle interior dimensions and step height for each vehicle is show in Table Three.

TABLE THREE

Estimated Vehicle Interior Dimensions and Step Height

	Interior Height	Interior Width	1st Step Height
Unmodified Mini-van	**47”**	**59”**	**12”**
Low floor mini-Van	**58”**	**59”**	**8 – 10”**
Purpose built ADA vehicle	**59”**	**64”**	**6”**
Mod. Van *without* lift (Type B)	**76”**	**68”**	**10”**
Mod. Van *with* lift (Type C)	**76”**	**68”**	**10”**
Small Transit Vehicle	**76”**	**82”**	**10.5”**
Medium Transit Vehicle	**81”**	**91”**	**11.5”**
Large Transit Vehicle	**81"**	**91”**	**11.5"**

9. **Can you store and clean a large vehicle?** Large vehicles require more storage room. If you are storing the vehicle outside, make sure you lot is large enough. In addition, outside storage in winter may cause problems for operating hydraulic equipment, such as a lift.

   If storing in a garage, make sure the vehicle will clear the entrance on the top and sides, and that there is adequate room inside to store and maneuver the vehicle. The larger and higher vehicles will require a garage with a minimum of 10 feet high by 9 feet wide doors.

   Also, consider how you will clean the vehicle. If you plan to order a *Modified Van (both Type B and C), or Small, Medium and Large Transit Vehicle*, washing the top may be a problem. Table Four shows approximate exterior vehicle dimensions.

   If large vehicle storage is a problem, the applicant should consider any vehicle except the *Medium and Large Transit Vehicles*.

TABLE FOUR

Estimated Vehicle Exterior Dimensions

	Overall Length	Overall Width	Overall Height
Unmodified Mini-van	**15'**	**70"**	**79"**
Low floor mini-van	**16'**	**72"**	**75"**
Purpose built ADA vehicle	**17'**	**79"**	**75"**
Mod. Van *without lift* (Type B)	**20'**	**80"**	**115"**
Mod. Van *with* lift (Type C)	**20'**	**80"**	**115"**
Small Transit Vehicle	**21'**	**94"**	**109"**
Medium Transit Vehicle	**23'**	**98"**	**114"**
Large Transit Vehicle	**25'**	**98"**	**114"**

FINALIZING THE SELECTION

This guide has presented you with a significant amount of material to digest. We hope it has been helpful in selecting a vehicle that will match your specific service needs. As with any discussion that must address a broad audience with diverse needs and requirements, there may be other factors that influence your decision making that have not been presented. If, after completing the vehicle selection questions, you are unable to make a final selection, please contact the INDOT Section 5310 Program Manager.

VEHICLE PROCUREMENT AND DELIVERY

As stated in the Section 5310 Program Guide and application, *INDOT is responsible for purchasing all equipment awarded through the Section 5310 program.* This vehicle purchasing process begins in late summer, when the Indiana Department of Administration, in cooperation with INDOT, solicits bids for a variety of vehicles for use by various state agencies and local units of government. The bids are awarded in late fall, and vehicle orders are then placed with the approved vendor. Depending on the type of vehicle ordered, vehicle delivery occurs during the following year.

VEHICLE SPECIFICATIONS AND FLOOR PLANS

VEHICLE: Mini-van – 6 passenger

The 6 passenger regular mini-van specification includes the equipment as listed below.

110" minimum wheelbase
Automatic transmission
Power steering
Heavy duty suspension
AM/FM/CD
Interior trim package
Carpeted flooring
Emergency equipment
Dual sliding passenger doors
6 cylinder engine
Power brakes
Heavy duty battery
Heat and air conditioning; front and rear
Body side moldings
Bench or bucket seats, cloth
Rear window defroster
Backup warning beeper

VEHICLE: Low floor mini-van

The 4 - 6 passenger Low floor mini-van specifications include the equipment listed below.

V6 engine, 181 CID (min.)
110" wheelbase
100 amp alternator (min.)
Intermittent windshield wipers
Rear window defroster
Sliding dual side doors
Rear lift-gate with
Emergency equipment
Automatic transmission
Manual swing-away ramp
Restraint system

630 CCA battery (min.)
Heat/air conditioning: front and rear
20 gallon gas tank (min.)
Inside hood release
Rear window washer/wiper
Manufacturer's standard colors
Quick release seats/flip seats (vinyl)
AM/FM/CD
Backup alarm/beeper
Wheelchair tie-down system
Option - delete middle passenger seat

Typical Floor Plan

(Not shown is the removable quick release seat next to driver, center flip seat and driver side sliding door)

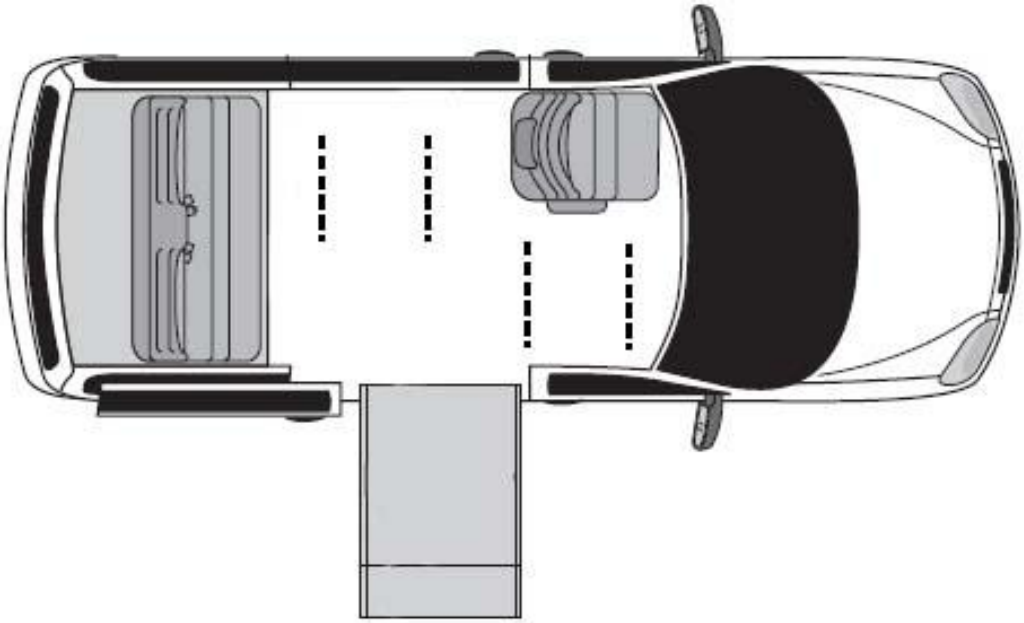

VEHICLE: Purpose Built ADA vehicle

The 4 passenger Purpose built ADA vehicle specifications include the equipment listed below.

6L 2V EFI V8 Engine
122” wheelbase
100 amp alternator (min.)
Intermittent windshield wipers
Rear window defroster
Dual side doors
Rear lift-gate with
Emergency equipment
Automatic transmission
Manual pull-out ramp

750 CCA battery (min.)
Heat/air conditioning: front and rear
24 gallon gas tank (min.)
Inside hood release
Rear window washer/wiper
Manufacturer's standard colors
Quick release seats/flip seats (vinyl)
AM/FM/CD
Backup alarm/beeper
Wheelchair tie-down system

Typical Floor Plan

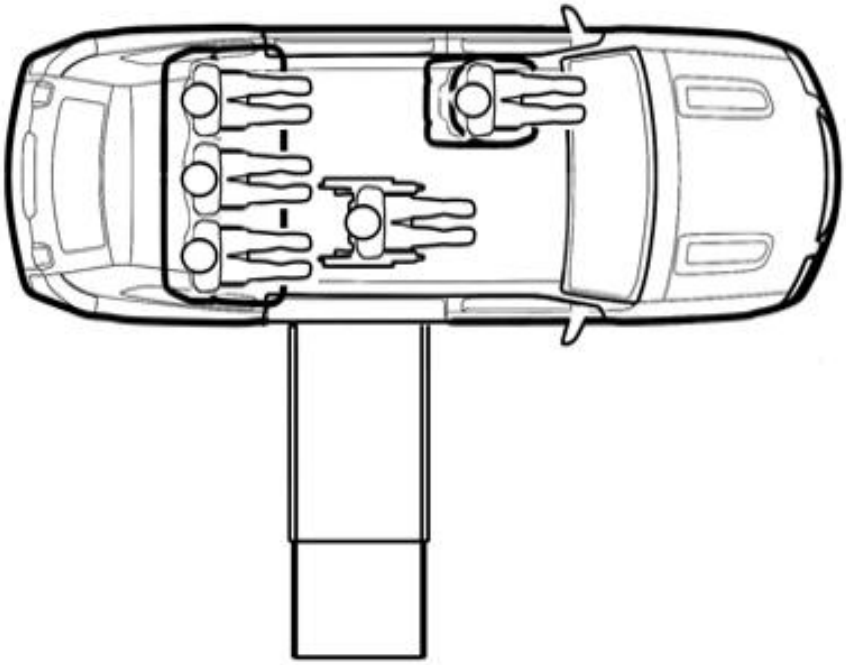

VEHICLE: Modified Van without lift (Type B)

The 12 passenger Modified Van without lift (Type B) specifications include transit seating, 30” raised roof and the equipment listed below.

- 8 cylinder engine
- 138" minimum wheelbase
- 220" minimum overall length
- Heavy duty battery, air & suspension
- Automatic transmission
- Power steering
- Dual compressor heat & air, front & rear
- AM/FM/CD
- Exterior spare tire carrier
- 360 degree, tinted window glass
- 30” raised roof & passenger door
- Built in passenger step
- Power-operated door control (right front service door)
- Rust proofing
- Insulation
- Radial tires
- 1-66", 3-36" & 3-17" transit seats/belts
- Transit flooring
- Padded vertical stanchion
- Emergency equipment
- Large capacity fuel tank (30 gal. min.)
- Backup warning beeper
- Two side mirrors
- Transit style entry door

Typical Floor Plan:

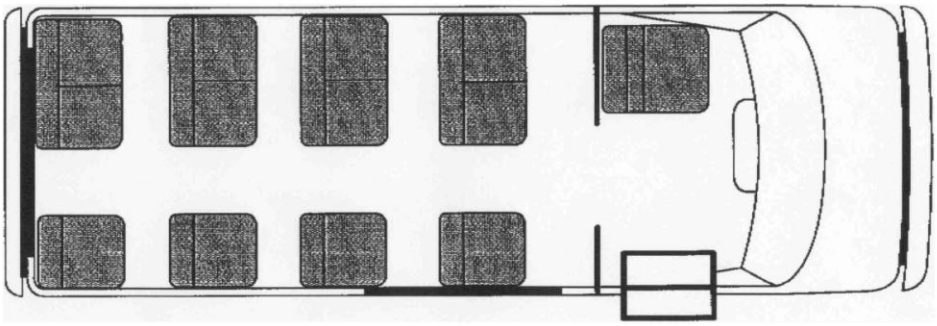

VEHICLE: Modified Van with lift (Type C)

The 6 to 10 passenger Modified Van with lift (Type C) specifications include 1 or 2 forward facing wheelchair tie-downs, automatic lift, 30” raised roof and the equipment listed below.

- 8 cylinder engine
- 138" minimum wheelbase
- 220" minimum overall length
- Heavy duty battery, alt. & suspension
- Automatic transmission
- Power steering
- Dual compressor heat/air, front/rear
- Automatic wheelchair lift
- 360 degree, tinted window glass
- Large capacity fuel tank (30 gal. min.)
- 1 or 2 wheelchair tiedowns
- Backup warning beeper
- Transit-style entry door
- *Extra wheelchair tiedowns (up to 3 total)*
- Exterior spare tire carrier
- Emergency equipment
- Radial tires
- Rust proofing
- Insulation
- Transit flooring
- Built in passenger step
- Padded vertical stanchion
- 30” raised roof, lift and passenger door
- AM/FM/CD
- Power-operated door control (right front service door)
- Fixed or flip transit seats/belts

Typical floor plans with one or two wheelchair tiedowns:

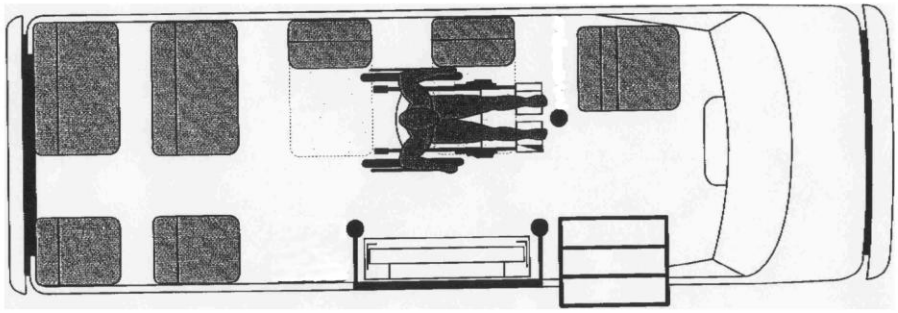

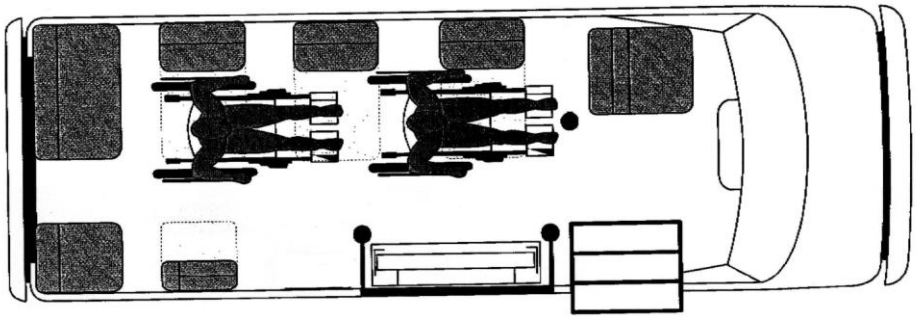

VEHICLE: SMALL TRANSIT VEHICLE (with lift)

The 8 passenger Small Transit Vehicle specifications include the following:

- Automatic transmission
- Eight cylinder engine
- 770 cca battery
- 225 amp alternator
- 30 gallon minimum fuel tank
- Transit flooring
- Tinted glass in windshield and all windows
- Rust proofing
- Radial tires
- Left and right hand outside mirrors with Vision Expansion System
- 138” minimum wheelbase
- Power steering and brakes
- Heavy duty equipment (cooling system, springs, shock absorbers)
- Backup warning beeper
- AM/FM/CD

- Emergency equipment
- Fixed transit type seats
- Seat belts (driver and all passengers)
- Priority seating signs
- Automatic wheelchair lift
- Dual compressor heat/air conditioning (front/rear)

Typical Floor Plan for Small Transit Vehicle:

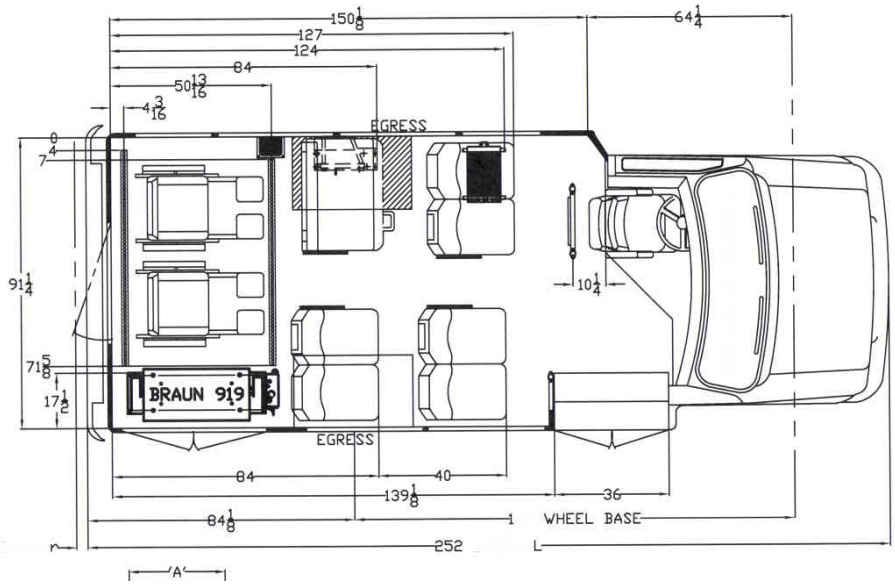

VEHICLE: MEDIUM TRANSIT VEHICLE (with lift)

The 12 passenger Small Transit Vehicle specifications include the following:

- Automatic transmission
- Eight cylinder engine
- 770 cca battery
- 225 amp alternator
- 30 gallon minimum fuel tank
- Tinted glass in windshield and all windows
- Rust proofing
- Radial tires
- Left and right hand outside mirrors with Vision Expansion System
- 158” minimum wheelbase
- Power steering and brakes
- Heavy duty equipment (cooling system, springs, shock absorbers)
- Backup warning beeper
- AM/FM/CD
- Emergency equipment
- Fixed or flip transit type seats
- Seat belts (driver and all passengers)
- Priority seating signs
- Automatic wheelchair lift
- Dual compressor heat/air conditioning (front/rear)
- Transit flooring

Typical Floor Plan for Medium Transit Vehicle:

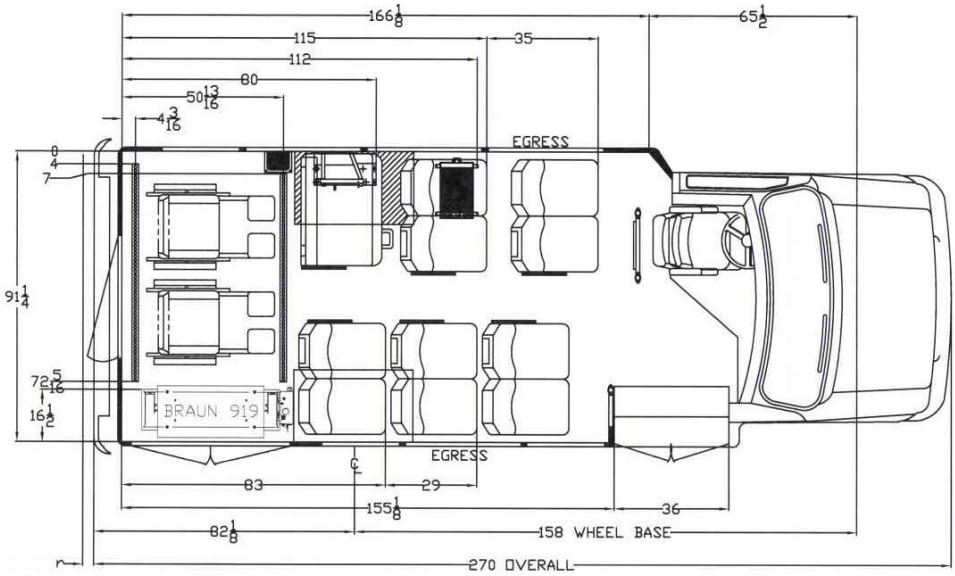

VEHICLE: LARGE TRANSIT VEHICLE (with lift)

The 16 passenger Large Transit vehicle specifications include the following:

- Automatic transmission
- Eight cylinder engine
- 770 cca battery
- 225 amp alternator
- Two wheelchair tiedowns
- Tinted glass in windshield and all windows
- Rust proofing
- Radial tires
- Left and right hand outside mirrors with Vision Expansion System
- 176" minimum wheelbase
- Transit flooring
- Power steering and brakes
- Heavy duty equipment (cooling system, springs, shock absorbers)
- Backup warning beeper
- 50 gallon minimum fuel tank
- Emergency equipment
- Fixed or flip transit type seats
- Seat belts (driver and all passengers)
- Priority seating signs
- Automatic wheelchair lift
- Dual compressor heat/air conditioning (front/rear)
- AM/FM radio with CD player
- *Up to two additional wheelchair tiedowns*

Typical Floor Plan for Large Transit Vehicle:

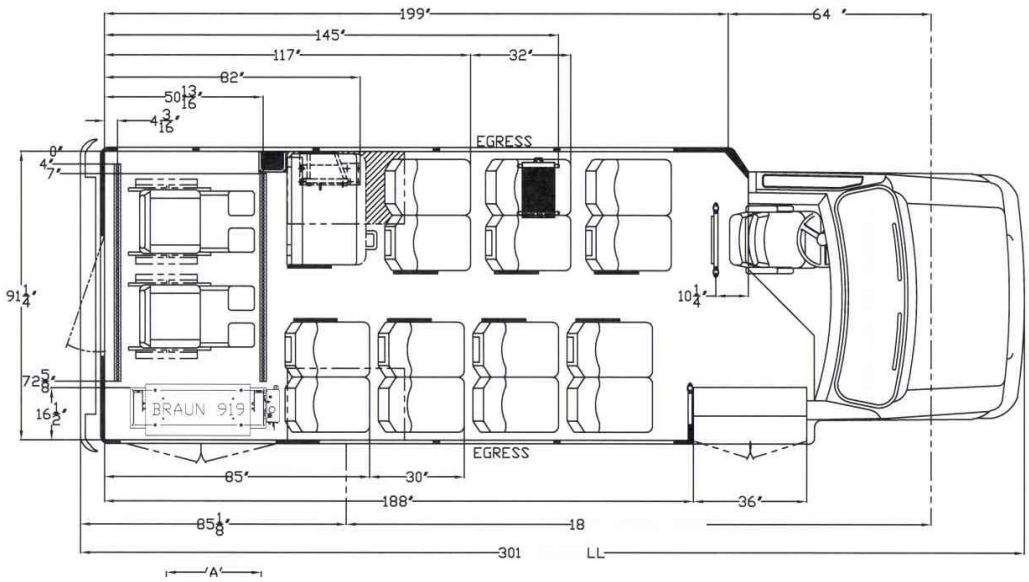

TABLE FIVE - TYPICAL VEHICLE CHARACTERISTICS AT A GLANCE

				Modified Van with 30" roof				
	Regular Mini Van	**Low Floor Mini van**	**Purpose Built ADA Vehicle**	**Type B**	**Type C**	**Small Transit Vehicle**	**Medium Transit Vehicle**	**Large Transit Vehicle**
Max. Seats (without accessibility package)	6	Not Available	Not Available	12	Not Available	13	16	18
Max. Seating positions with accessibility package (Ambulatory and Wheelchair)	Not Available	4	4	Not Available	8	8	12	16
Lift or ramp-equipped/Location	None	Ramp/Side	Ramp/Side	None	Lift/Side	Lift/Side	Lift/Side	Lift/Side
Total Cost	$20,000	$40,000	$50,000	$48,000	$50,000	$50,000	$52,000	$55,000
Applicant's Share (20%)	$4,000	$8,000	$10,000	$9,600	$10,000	$10,000	$10,400	$11,000
Minimum Useful Life (years/miles)	4/100,000	4/100,000	4/100,000	4/100,000	4/100,000	4/100,000	4/100,000	4/100,000
Typical Chassis	Dodge	Dodge	Custom	Ford	Ford	Ford/Chevy	Ford/Chevy	Ford/Chevy
Typical Engine	V-6	V-6	V-8	V-8	V-8	5.4 Liter V-8	6.8 Liter V-10	6.8 Liter V-10
Fuel (miles per gallon)*	25	19	14	10	10	8	8	8
Fuel Tank capacity (gallons)	20	20	24	35	35	37	55	55
Requires CDL?	No	No	No	No	No	No	Yes/No*	Yes
Overall Length	15'	16'	17'	20'	20'	21'	23'	25'
Overall Width	70"	72"	79"	80"	80"	94"	98"	98"
Overall Height	79"	75"	75"	115"	115"	109"	114"	114"
Interior Height	47"	58"	59"	76"	76"	76"	76"	81"
Interior Width	59"	59"	64"	68"	72"	82"	91"	91"
First Step Height	10 - 12"	8 - 10"	6"	10 - 12"	10 - 12"			10 - 12"
Turning Radius	20'	20'	21'	25 - 34'	25 - 34'	28 -40'	28 -40'	28 -40'
Drive Wheels	Front	Front	Rear	Rear	Rear	Rear	Rear	Rear
Gross Vehicle Weight Rating (min.)	n/a	5,200 lbs	6,600 lbs	9,000 lbs	9,000 lbs	11,500 lbs	14,050 lbs	14,050 lbs

* Actual mileage may vary

All figures are subject to change

BEYOND ADA (NEW FREEDOM) PROGRAM ASSISTANCE APPLICATION CY 2013

Funding for recipients involved in the CY 2013 "New Freedom" operating/capital grant program, is coming from previous federal allocations. INDOT has already selected those recipients for CY 2013.