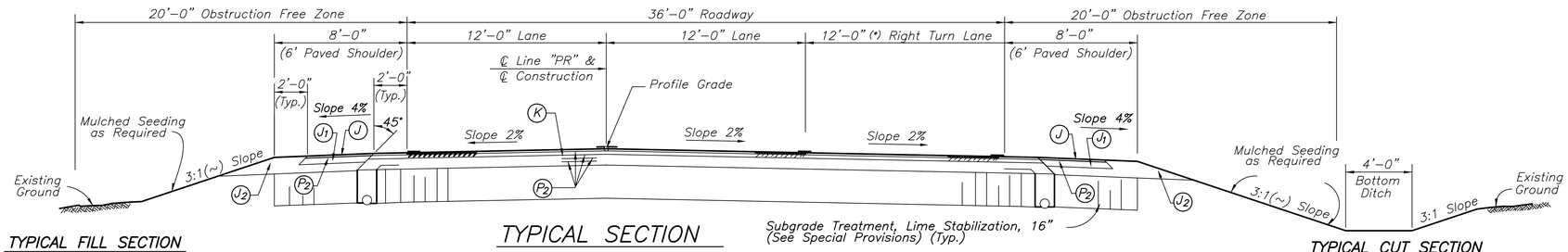


## TYPICAL FILL SECTION

(~): Side Slope varies (from 3:1 to 2:1) From Sta. 202+59.17 to Sta. 203+39.17, Lt.
(~): Side Slope is 2:1 From Sta. 203+39.17 to Sta. 208+06.08, Lt.

## TYPICAL SECTION

### Sta. 201+00 to Sta. 208+06.8 Line "PR"

Scale: 1/4" = 1'–0"

(*): Varies 12' to 0' From Sta. 206+36.8 to Sta. 208+06.8 "PR"

## TYPICAL CUT SECTION

(~): Side Slope varies (from 3:1 to 2:1) From Sta. 205+95.35 to Sta. 206+36.60, Rt.
(~): Side Slope is 2:1 From Sta. 206+36.60 to Sta. 208+06.80, Rt.

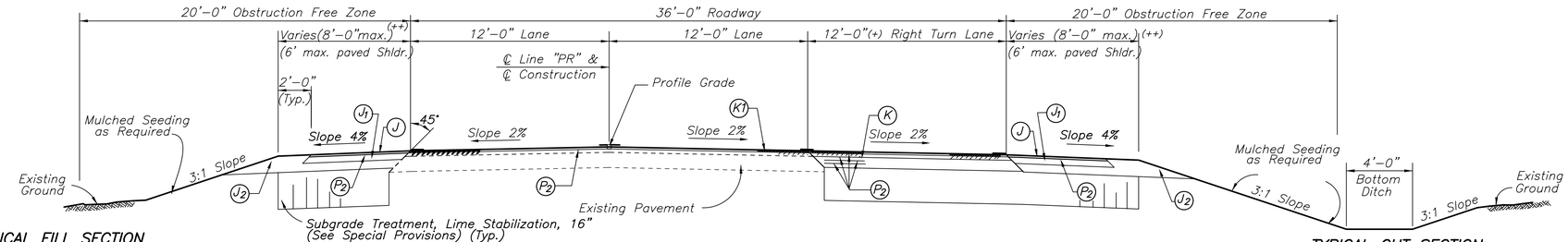


## TYPICAL FILL SECTION

## TYPICAL SECTION

### Sta. 199+50 to Sta. 201+00 Line "PR"

Scale: 1/4" = 1'–0"

(+): Varies 0' to 12' From Sta. 199+72.1 to Sta. 200+72.10 "PR"
(++): Varies 4' to 8' From Sta. 199+50 to Sta. 201+00 "PR"

## TYPICAL CUT SECTION

**NOTE:**
No Riprap to be placed in ditches within Rock Area.

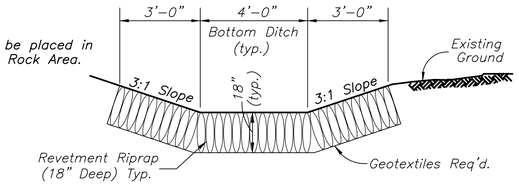


## TYPICAL RIPRAP SIDE DITCH

Scale: 3/8" = 1'–0"

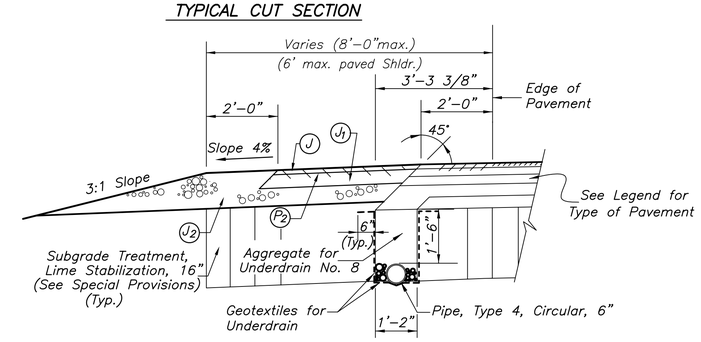


## UNDERDRAIN DETAIL

Scale: 1/2" = 1'–0"

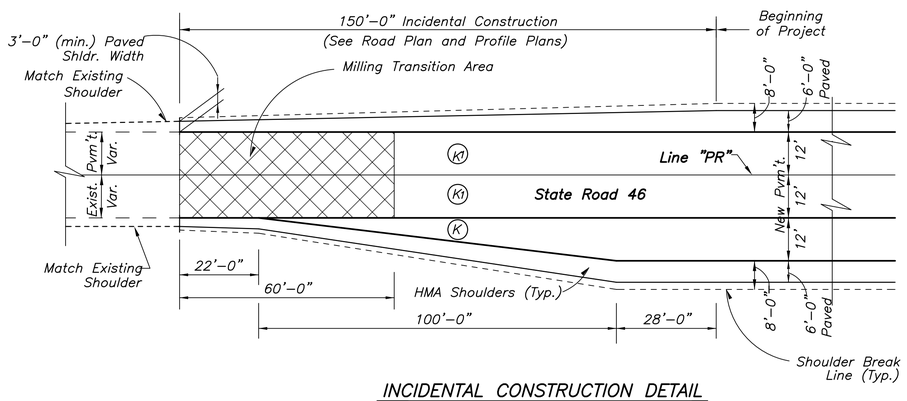


## INCIDENTAL CONSTRUCTION DETAIL

Scale: 1" = 20'–0"

## LEGEND

**(K)**
- 165 #/SYS. QC/QA–HMA, 3, 70, Surface, 9.5 mm
- 275 #/SYS. QC/QA–HMA, 3, 70, Intermediate, 19.0 mm
- 275 #/SYS. QC/QA–HMA, 3, 64, Base, 19.0 mm
- 250 #/SYS. QC/QA–HMA, 5, 76, Intermediate, OG19.0 mm
- 330 #/SYS. QC/QA–HMA, 3, 64, Base, 19.0 mm
- Subgrade Treatment, Lime Stabilization, 16" (See Special Provisions) (Typ)

**(R)**
- 165 #/SYS. QC/QA–HMA, 3, 70, Surface, 9.5 mm
- 275 #/SYS. QC/QA–HMA, 3, 70, Intermediate, 19.0 mm
- Variable Depth QC/QA–HMA, 3, 70, Intermediate, 19.0 mm

**(K1)**
- 165 #/SYS. QC/QA–HMA, 3, 70, Surface, 9.5 mm
- Variable Depth QC/QA–HMA, 3, 70, Intermediate, 19.0 mm
- (220 #/SYS. QC/QA–HMA, 3, 70, Intermediate, 19.0 mm minimum)

**(J)** 165 #/SYS. QC/QA–HMA, 1, 64, Surface, 9.5 mm

**(J1)** 495 #/SYS. QC/QA–HMA, 1, 64, Intermediate, 19.0 mm

**(J2)** 6" Compacted Aggregate, No. 53, Base

**(J3)** Variable Compacted Aggregate, No. 53, Base (3" Min.)

**(P2)** Asphalt for Tack Coat between all layers of HMA


ASA Engineering Consultants, Inc.
3717 Woodview Trace
Indianapolis, Indiana 46268
(317) 334–1334


ALI SALEEM ABU-FARES
REGISTERED No. 870062 STATE OF INDIANA
PROFESSIONAL ENGINEER

RECOMMENDED FOR APPROVAL — DESIGN ENGINEER — October 11, 2011 — DATE

DESIGNED AAC | DRAWN JimB
CHECKED ASA | CHECKED AKS

INDIANA DEPARTMENT OF TRANSPORTATION

TYPICAL CROSS–SECTIONS
LINE "PR"

| HORIZONTAL SCALE | BRIDGE FILE |
|---|---|
| As Noted | |
| VERTICAL SCALE | DESIGNATION |
| As Noted | 9467555 |
| SURVEY BOOK | SHEETS |
| | 3 of 59 |
| CONTRACT | PROJECT NO. |
| 24382 | MWP–5000 (00C) |

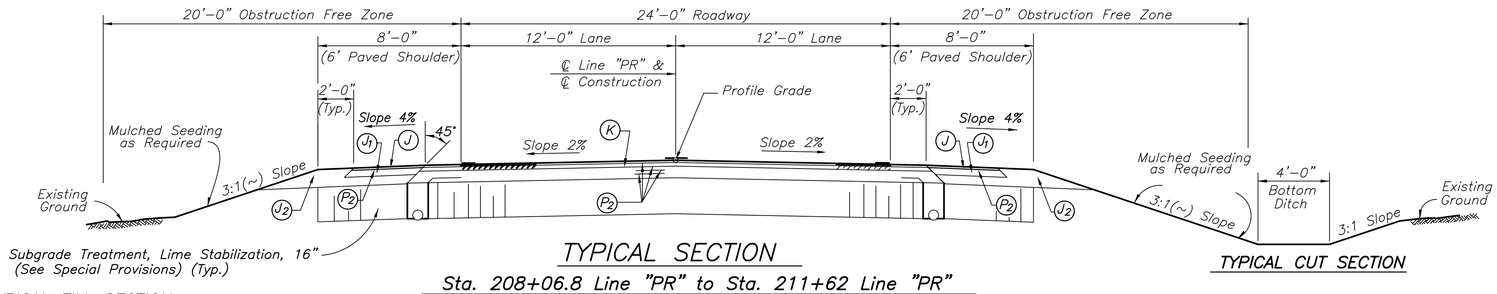


TYPICAL FILL SECTION

TYPICAL CUT SECTION

## TYPICAL SECTION

**Sta. 208+06.8 Line "PR" to Sta. 211+62 Line "PR"**

**Sta. 221+51 Line "PR" to Sta. 226+10 Line "PR"**

**Sta. 247+70 Line "PR" to Sta. 248+00 Line "PR"**

Scale: 1/4" = 1'–0"

(~): Side Slope is 2:1 From Sta. 208+06.80 to Sta. 208+42.92, Lt.

(~): Side Slope varies (from 2:1 to 3:1) From Sta. 208+42.92 to Sta. 208+84.17, Lt.

(~): Side Slope is 2:1 From Sta. 208+06.80 to Sta. 208+61.12, Rt.

(~): Side Slope varies (from 2:1 to 3:1) From Sta. 208+61.12 to Sta. 209+02.37, Rt.

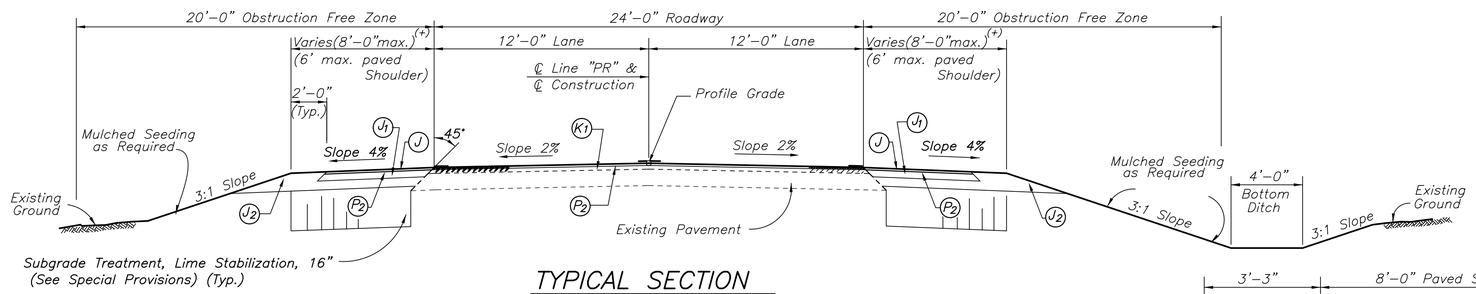


TYPICAL FILL SECTION

TYPICAL CUT SECTION

## TYPICAL SECTION

**Sta. 248+00 Line "PR" to Sta. 249+00 Line "PR"**

Scale: 1/4" = 1'–0"

(+): Varies 8' to 4' From Sta. 248+00 to Sta. 249+00 "PR"

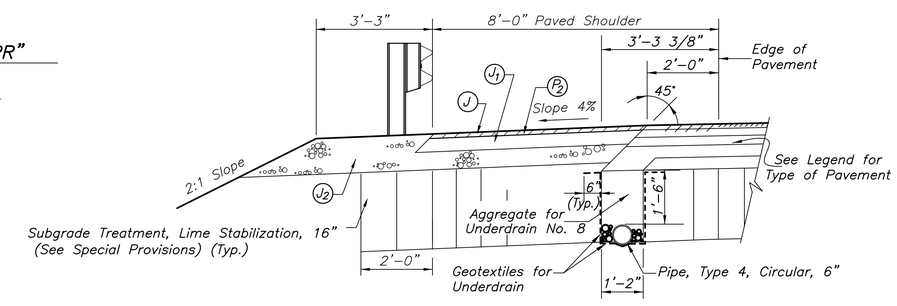


## TYPICAL SHOULDER DETAIL WITH GUARD RAIL

Scale: 1/2" = 1'–0"

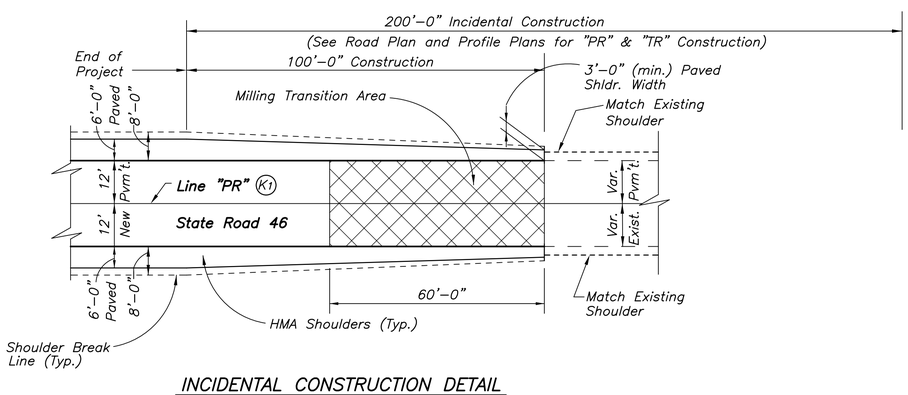


## INCIDENTAL CONSTRUCTION DETAIL

Scale: 1" = 20'–0"

## LEGEND

(K)
- 165 #/SYS. QC/QA–HMA, 3, 70, Surface, 9.5 mm
- 275 #/SYS. QC/QA–HMA, 3, 70, Intermediate, 19.0 mm
- 275 #/SYS. QC/QA–HMA, 3, 64, Base, 19.0 mm
- 250 #/SYS. QC/QA–HMA, 5, 76, Intermediate, OG19.0 mm
- 330 #/SYS. QC/QA–HMA, 3, 64, Base, 19.0 mm
- Subgrade Treatment, Lime Stabilization, 16" (See Special Provisions) (Typ.)

(R)
- 165 #/SYS. QC/QA–HMA, 3, 70, Surface, 9.5 mm
- 275 #/SYS. QC/QA–HMA, 3, 70, Intermediate, 19.0 mm
- Variable Depth QC/QA–HMA, 3, 70, Intermediate, 19.0 mm

(K1)
- 165 #/SYS. QC/QA–HMA, 3, 70, Surface, 9.5 mm
- Variable Depth QC/QA–HMA, 3, 70, Intermediate, 19.0 mm (220 #/SYS. QC/QA–HMA, 3, 70, Intermediate, 19.0 mm minimum)

(J) 165 #/SYS. QC/QA–HMA, 1, 64, Surface, 9.5 mm

(J1) 495 #/SYS. QC/QA–HMA, 1, 64, Intermediate, 19.0 mm

(J2) 6" Compacted Aggregate, No. 53, Base

(J3) Variable Compacted Aggregate, No. 53, Base (3" Min.)

(P2) Asphalt for Tack Coat between all layers of HMA


ASA Engineering Consultants, Inc.
3717 Woodview Trace
Indianapolis, Indiana 46268
(317) 334–1334


ALI SALEEM ABU-ARES REGISTERED No. 87062 STATE OF INDIANA PROFESSIONAL ENGINEER

RECOMMENDED FOR APPROVAL — DESIGN ENGINEER — October 11, 2011 — DATE

DESIGNED AAC | DRAWN JimB

CHECKED ASA | CHECKED AKS

INDIANA DEPARTMENT OF TRANSPORTATION

TYPICAL CROSS–SECTIONS
LINE "PR"

| HORIZONTAL SCALE | BRIDGE FILE |
|---|---|
| As Noted | |
| VERTICAL SCALE | DESIGNATION |
| As Noted | 9467555 |
| SURVEY BOOK | SHEETS |
| | 4 of 59 |
| CONTRACT | PROJECT NO. |
| 24382 | MWP–5000 (00C) |

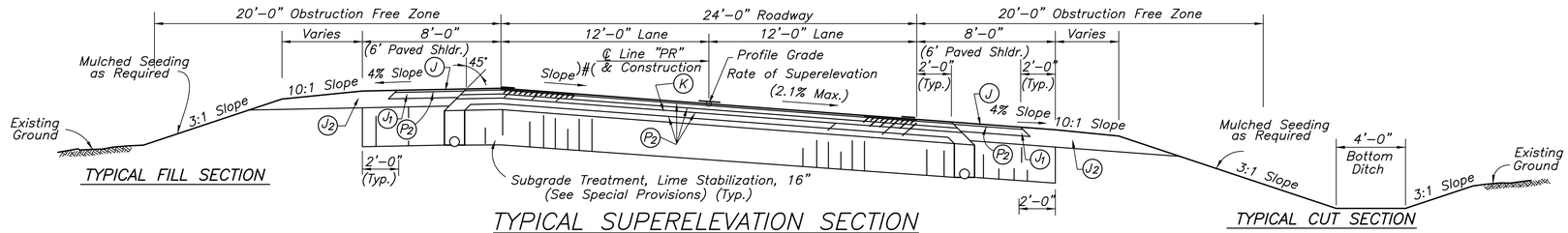


## TYPICAL SUPERELEVATION SECTION

Sta. 211+62 to Sta. 221+51 "PR"

Scale: 1/4" = 1'–0"

(#): Varies –2.1% to +2.1% from Sta. 211+62 to Sta. 213+00 & Sta. 220+49.12 to Sta. 221+51 "PR"

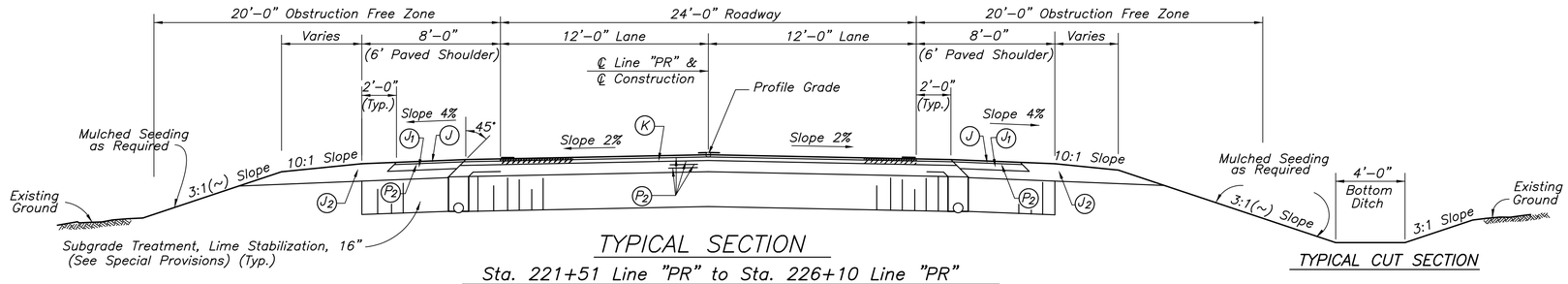


## TYPICAL SECTION

Sta. 221+51 Line "PR" to Sta. 226+10 Line "PR"

Scale: 1/4" = 1'–0"

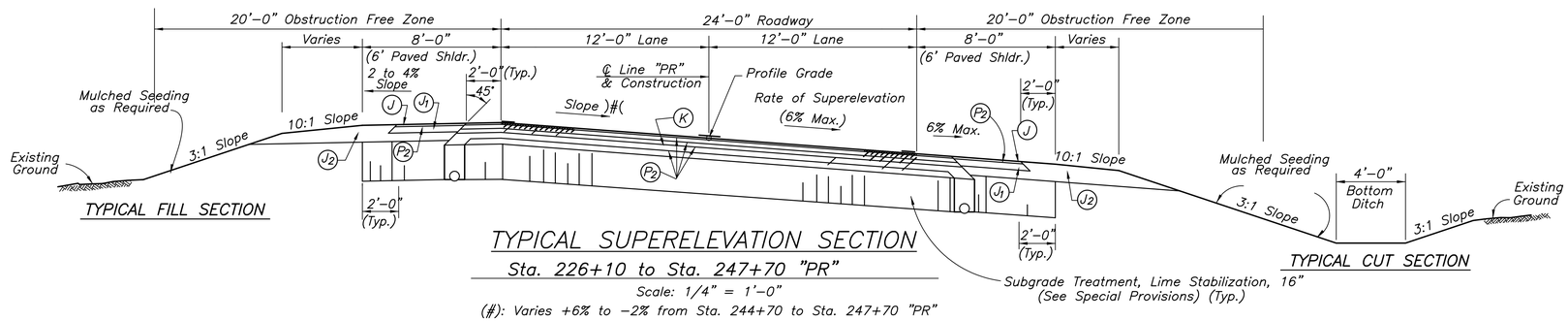


## TYPICAL SUPERELEVATION SECTION

Sta. 226+10 to Sta. 247+70 "PR"

Scale: 1/4" = 1'–0"

(#): Varies +6% to –2% from Sta. 244+70 to Sta. 247+70 "PR"

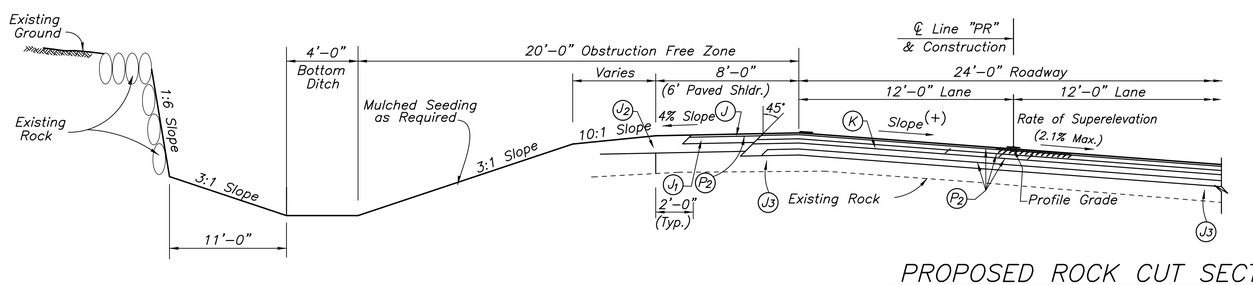


TYPICAL CUT SECTION

## PROPOSED ROCK CUT SECTION
## TYPICAL SUPERELEVATION SECTION

Scale: 1/4" = 1'–0"

### Rock Excavation

These Quantities will be omitted if rock is encounter.

Sta. 211+80 to Sta. 214+05

193.5 Tons of Revetment Riprap

258 Sys. of Geotextiles

Sta. 214+83 to Sta. 216+25

89.4 Sys. of Sodding

### Notes:

See Sheet No. 4 for Legend


ASA Engineering Consultants, Inc.
3717 Woodview Trace
Indianapolis, Indiana 46268
(317) 334–1334


ALI SALEEM ABUFARES REGISTERED No. 870062 STATE OF INDIANA PROFESSIONAL ENGINEER

RECOMMENDED FOR APPROVAL — DESIGN ENGINEER — October 11, 2011 — DATE

DESIGNED AAC | DRAWN JimB

CHECKED ASA | CHECKED ASA

INDIANA DEPARTMENT OF TRANSPORTATION

TYPICAL CROSS–SECTIONS LINE "PR"

| HORIZONTAL SCALE | BRIDGE FILE |
|---|---|
| As Noted | |
| VERTICAL SCALE | DESIGNATION |
| As Noted | 9467555 |
| SURVEY BOOK | SHEETS |
| | 5 of 59 |
| CONTRACT | PROJECT NO. |
| 24382 | MWP–5000 (00C) |

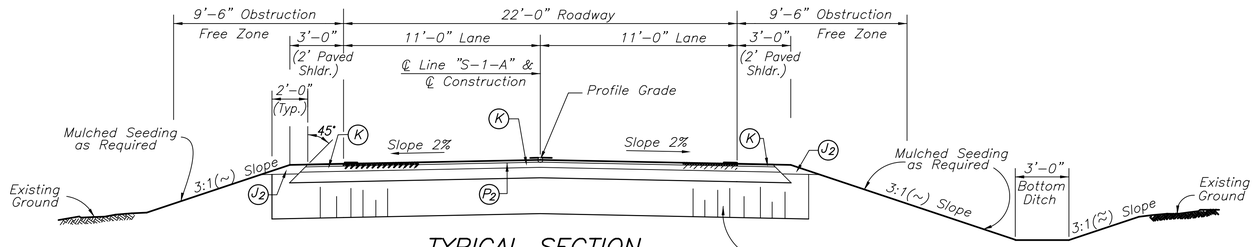


TYPICAL FILL SECTION

TYPICAL SECTION

Sta. 13+00.0 to Sta. 19+36.88 Line "S-1-A"

Sta. 20+75.12 to Sta. 25+00.0 Line "S-1-A"

Scale: 1/4" = 1'-0"

TYPICAL CUT SECTION

(~): Side Slope is 4:1 From Sta. 20+50 to Sta. 22+00, Lt.
(~): Side Slope varies (from 4:1 to 5:1) From Sta. 22+00 to Sta. 22+50, Lt.
(~): Side Slope is 5:1 From Sta. 22+50 to Sta. 25+00, Lt.
(≈): Bk. Side Slope varies (from 3:1 to 2:1) From Sta. 21+50 to Sta. 22+00, Lt.
(≈): Bk. Side Slope is 2:1 From Sta. 22+00 to Sta. 25+00, Lt.

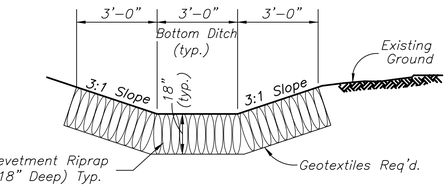


TYPICAL RIPRAP SIDE DITCH

Scale: 3/8" = 1'-0"

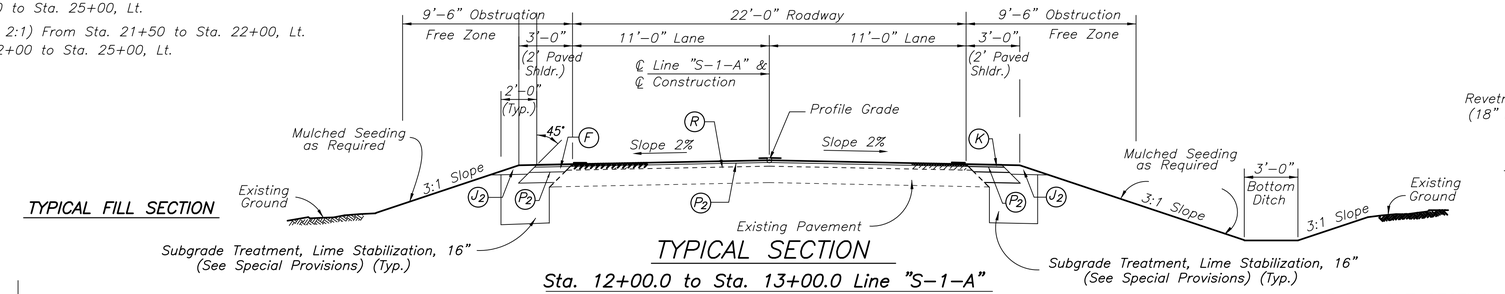


TYPICAL FILL SECTION

TYPICAL SECTION

Sta. 12+00.0 to Sta. 13+00.0 Line "S-1-A"

Sta. 25+00.0 to Sta. 26+00.0 Line "S-1-A"

Scale: 1/4" = 1'-0"

TYPICAL CUT SECTION

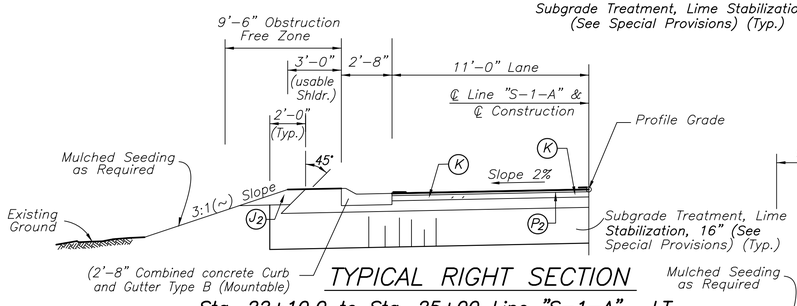


TYPICAL RIGHT SECTION

Sta. 22+10.0 to Sta. 25+00 Line "S-1-A", LT.

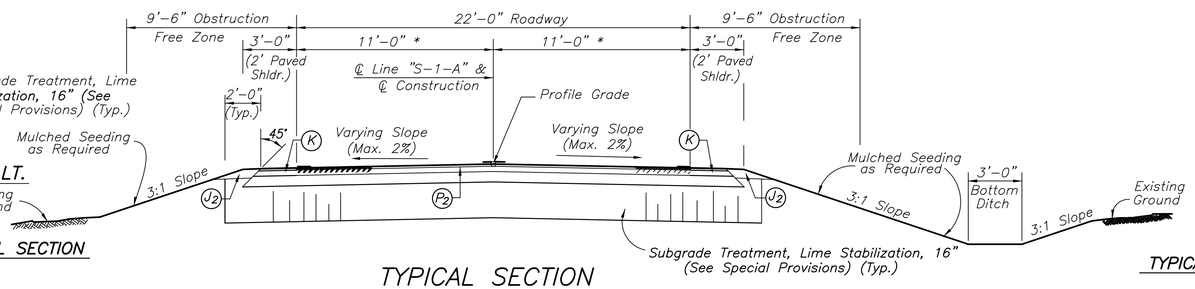


TYPICAL FILL SECTION

TYPICAL SECTION

Sta. 19+36.88 to Sta. 19+82.00 Line "S-1-A", *: Varies to 56'-2"

Sta. 20+30.00 to Sta. 20+75.12 Line "S-1-A", *: Varies from 50'-8"

Scale: 1/4" = 1'-0"

TYPICAL CUT SECTION

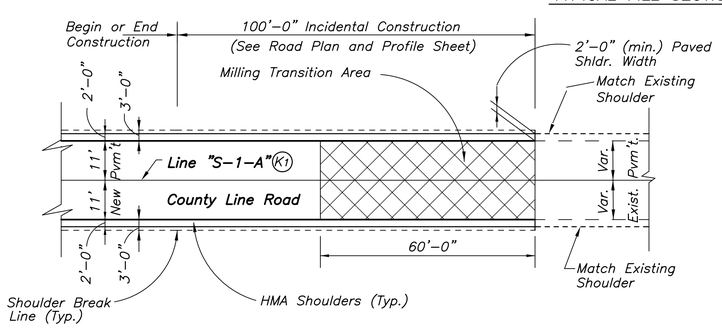


INCIDENTAL CONSTRUCTION DETAIL

Scale: 1" = 20'-0"

## LEGEND

K:
- 165 #/SYS. HMA, Type A, Surface
- 385 #/SYS. HMA, Type A, Intermediate
- 7" Compacted Aggregate, No. 53, Base
- Subgrade Treatment, Lime Stabilization, 16" (See Special Provisions) (Typ.)

R:
- 165 #/SYS. HMA, Type A, Surface
- 275 #/SYS. HMA, Type A, Intermediate
- Variable Depth HMA, Type A, Intermediate

J2: 6" Compacted Aggregate, No. 53, Base

J3: Variable Compacted Aggregate, No. 53, Base (3" Min.)

P2: Asphalt for Tack Coat between all layers of HMA

K1:
- 165 #/SYS HMA, Type A, Surface
- Variable Depth HMA, Type A, Intermediate (220 #/SYS. HMA minimum)


ASA Engineering Consultants, Inc.
3717 Woodview Trace
Indianapolis, Indiana 46268
(317) 334-1334


ALI SALEEM ABU-ARES REGISTERED No. 870062 STATE OF INDIANA PROFESSIONAL ENGINEER

RECOMMENDED FOR APPROVAL — DESIGN ENGINEER — DATE October 11, 2011

DESIGNED AAC | DRAWN JimB

CHECKED ASA | CHECKED AKS

INDIANA DEPARTMENT OF TRANSPORTATION

TYPICAL CROSS-SECTIONS LINE "S-1-A"

| HORIZONTAL SCALE | BRIDGE FILE |
|---|---|
| As Noted | |
| VERTICAL SCALE | DESIGNATION |
| As Noted | 9467555 |
| SURVEY BOOK | SHEETS |
| | 6 of 59 |
| CONTRACT | PROJECT NO. |
| 24382 | MWP-5000 (00C) |

Sec. 24, T10N, R3W
Washington Township
Owen County

Scale: 1"=50'

| HYDRAULIC DATA | | | | | |
|---|---|---|---|---|---|
| Drainage Area | 0.0625 | Sq. Mi. | Skew | 10°, | Lt. |
| Design Discharge Q–100 | 50.0 | ft³/sec | Scour Depth – (Q–100) | | ft. |
| Velocity – Q–100 | 8.61 | ft/sec | Minimum Low Structure Elev. | 761.8 | ft. |
| Elev. – Q–100 @ Structure | 758.15 | ft. | Existing Backwater | 1.09 | ft. |
| Area Req'd. Below Q100 Elev | 11.0 | Sq.Ft. | Existing Low Structure Elev. | | ft. |
| Area Provided | 11.0 | Sq.Ft. | Exist. Rd. Overflow Waterway Area | 0.0 | Sq.Ft. |
| Freeboard Provided | –.– | ft. | Existing Waterway Opening | | |
| Proposed Backwater | 0.8 | ft. | Below Q100 Elev. | 10.5 | Sq.Ft. |

Begin Incidental Construction
P.O.T. Sta. 199+50.0 Line "PR"

Begin Project No. MWP–5000 (00C)
P.O.T. Sta. 201+00.0 Line "PR"
1–Monument Type B Req'd.

Cross Hatched areas indicate 36.8 Tons of Class 1 Riprap (18" Deep) over 49 sys. of Geotextiles (@ Box Ends)

P.I. Sta. 14+42.27 "TR"= P.O.T. Sta. 203+42.01"PR" (12' Lt.)

Revetment Riprap Ditch (18" Deep) Req'd. Lt.

P.I. Sta. 16+01.14"TR"= P.O.T. Sta. 205+00.0 "PR" (30' Lt.)

Sta. 206+75 "PR"= Sta. 5+00 "S–2–A"

Structure No. 2
Sta. 206+99, 124 Lft. of 60"ø Pipe w/Conc. Anchors
Skew 10°, Lt.

Public Road Appr. Type A
Sta. 209+05
W= 18 ft.
Structure No. 3
70 Lft. of 24"ø Pipe w/End Sections
Skew 1°, Lt.

Class II Drive
Sta. 211+50
W= 12 ft.
Structure No. 6
52 Lft. of 15"ø Pipe, No skew w/End Sections

Class II Drive
Sta. 210+53.0
W= 24 ft.
Str. No. 5
44 Lft. of 15"ø Pipe
Skew 2°, Lt.
w/End Sections

Public Rd. Appr. Type A
Sta. 209+15
W= 18 ft.
Str. No. 4
62 Lft. of 24"ø Pipe
Skew 1°, Lt.
w/End Sections

Structure No. 1
70 Lft. of 18"ø Pipe
Skew 22°, Lt. w/End Sec.

Class II Drive
W=12 ft. 146.70 ft. from sta. 106+10 "PR" on Ashley St. West, Lt.

Public Road Appr. Type C
Sta. 206+10
W= 24 ft.

Begin Incidental Construction
Sta. 199+50
EL. 806.01

150 ft. Incidental Construction

Begin Project
Sta. 201+00
EL. 799.00

PROJECT LIMIT
(Full Depth Pvmt.)

PVC. 203+75
EL. 787.713

P.V.I. Sta. 208+00
EL. 762.25
VC = 970 ft

PVT. 212+85
EL. 777.528
PVC. 212+87
EL. 777.596

Exist. Elev. ("PR") = Exist. PG. ("B1")

Exist. PG. ("B1")

Str.# 1
18"ø pipe
0.91%

Str.# 2

Str.# 3
24"ø pipe

Str.# 4
24"ø pipe

Str.# 5
15"ø pipe

Str.# 6
15"ø pipe

Proposed Grade

Q100 EL. 758.15

LSE EL. 761.8

Transition From "V" Ditch to 4 ft. Bottom Lt.

Transition From "V" Ditch to 4 ft. Bottom Rt.

4 ft. Bott. Ditch Req'd. Lt.

4 ft. Bott. Ditch Req'd. Rt. Plotted 10 ft. Below Datum

Transition from "V" Ditch to 4 ft. Bottom, 15.4 Tons of Revetment Riprap (18" Deep) over 20.6 Sys. of Geotextiles Req'd. Lt.

Transition From Conc. PSD "V" Ditch to 4 ft. Bottom 20.5 Tons of Revetment Riprap (18" Deep) over 41.1 Sys. of Geotextiles Req'd. Rt.

471.6 Tons of Revetment Riprap (18" Deep) over 628.8 Sys. of Geotextiles Req'd. Lt.

387 Tons of Revetment Riprap (18" Deep) over 516 Sys. of Geotextiles Req'd. Rt.

141 Tons of Revet. Riprap (18" Deep) over 188 Sys. of Geotextiles Req'd. Lt.

87.7 Sys. of Sodding @ Ditch Req'd. Rt.

103.2 Tons of Revet. Riprap (18" Deep) 228.2 Sys. of Sodding @ Ditch Req'd. Lt.

137.6 Sys. of Sodding @ Ditch Req'd. Lt.

193.5 Tons of Revet. Riprap (18" Deep) over 258 Sys. of Geotextiles Req'd. Lt.

443.75 ft. of (1) Lt.

225.0 ft. of (1) Rt.

(2) Lt. 499.17

(3) Rt. +95.35 +36.60

(3) Lt. +42.92 +61.12

(3) Rt. +84.17 +02.37

+50 Lt./EL.805.85

+50 Rt./EL.805.77

+00 Lt. EL. 794.00

+00 Rt./EL.793.42

+00 Rt./EL.775.02

+50 Rt. EL.765.57

+25 Rt. EL.763.395

+20 Rt. EL.762.531

+50 Lt. /EL. 765.2

+50 Lt. EL. 762.7

+80 Lt. /EL. 758.80

+95 Lt. /EL. 760.79

+00 Lt. EL. 762.89

+16 Rt./EL.758.764

+50 Rt. EL.760.64

+00 Rt./EL.765.89

+50 Lt. /EL. 765.39

+00 Lt. /EL. 766.14

+00 Lt. /EL. 769.54

+50 Rt. EL.768.935

+50 Rt. EL.772.235

5.25%

7.2%

9.2%

6.3%

2.9%

5%

3%

2%

1.4%

0.5%

1.7%

3.2%

3.6%

2.2%

2.03%

3.5%

1.5%

Sec. 25, T10N, R3W
Washington Township
Owen County

MAILBOX ASSEMBLY, SINGLE, DOUBLE

| From | Lt./Rt. | Single | Double |
|---|---|---|---|
| 209+01 | Rt. | 1 | |
| 211+87 | Rt. | | 1 |
| Totals = | | 1 Ea. | 1 Ea. |

GUARDRAIL LEGEND:
(1) W–Beam GR. @ 6.25 ft. Spa. Req'd.
(2) GR. End Treatment Type "OS" Req'd.
(3) CWB GR. Connector System, Type 2 Req'd.

BENCH MARK DATA
TBM#1; RAILROAD SPIKE, +/– 2' ABOVE GROUND ON POWER POLE 186491 LOCATED ON THE NORTH SIDE OF SR 46 +/– 70' WEST OF THE INTERSECTION WITH SUNNYSIDE LANE. ELEV. = 766.46 FEET
Sta. 208+26.2, 66.1 Lt.

RIGHT–OF–WAY NOTES:
"ALL RIGHT–OF–WAY ON THIS SHEET TO BE AS SHOWN."
~~"ALL EXIST'G RIGHT–OF–WAY DESCRIBED FROM LINE "B1" EXCEPT AS NOTED."~~
"ALL ~~NEW~~ RIGHT–OF–WAY DESCRIBED FROM LINE "PR" EXCEPT AS NOTED."
All topography described from Line "PR"

N=19,971.85 E=17,336.96
CP 14 Sta. 197+84.26
@ 15.77 Rt. "PR"

N=19,947.63 E=18,109.08
CP 28 Sta. 205+56.59
@ 31.89 Rt. "PR"

N=20,016.49 E=18,490.19
CP 27 Sta. 209+36.95
@ 40.96 Lt. "PR"

SALEEM ABUFARES
REGISTERED No. 870062 STATE OF INDIANA
PROFESSIONAL ENGINEER

RECOMMENDED FOR APPROVAL — DESIGN ENGINEER — DATE 10/11/2011

DESIGNED AAC | DRAWN SSS
CHECKED ASA | CHECKED JTK

INDIANA DEPARTMENT OF TRANSPORTATION

ROAD PLAN & PROFILE
LINE "PR"

| HORIZONTAL SCALE | BRIDGE FILE |
|---|---|
| 1" = 50'–0" | |
| VERTICAL SCALE | DESIGNATION |
| 1" = 10'–0" | 9467555 |
| SURVEY BOOK | SHEETS |
| | 18 of 59 |
| CONTRACT | PROJECT NO. |
| 24382 | MWP–5000 (00C) |

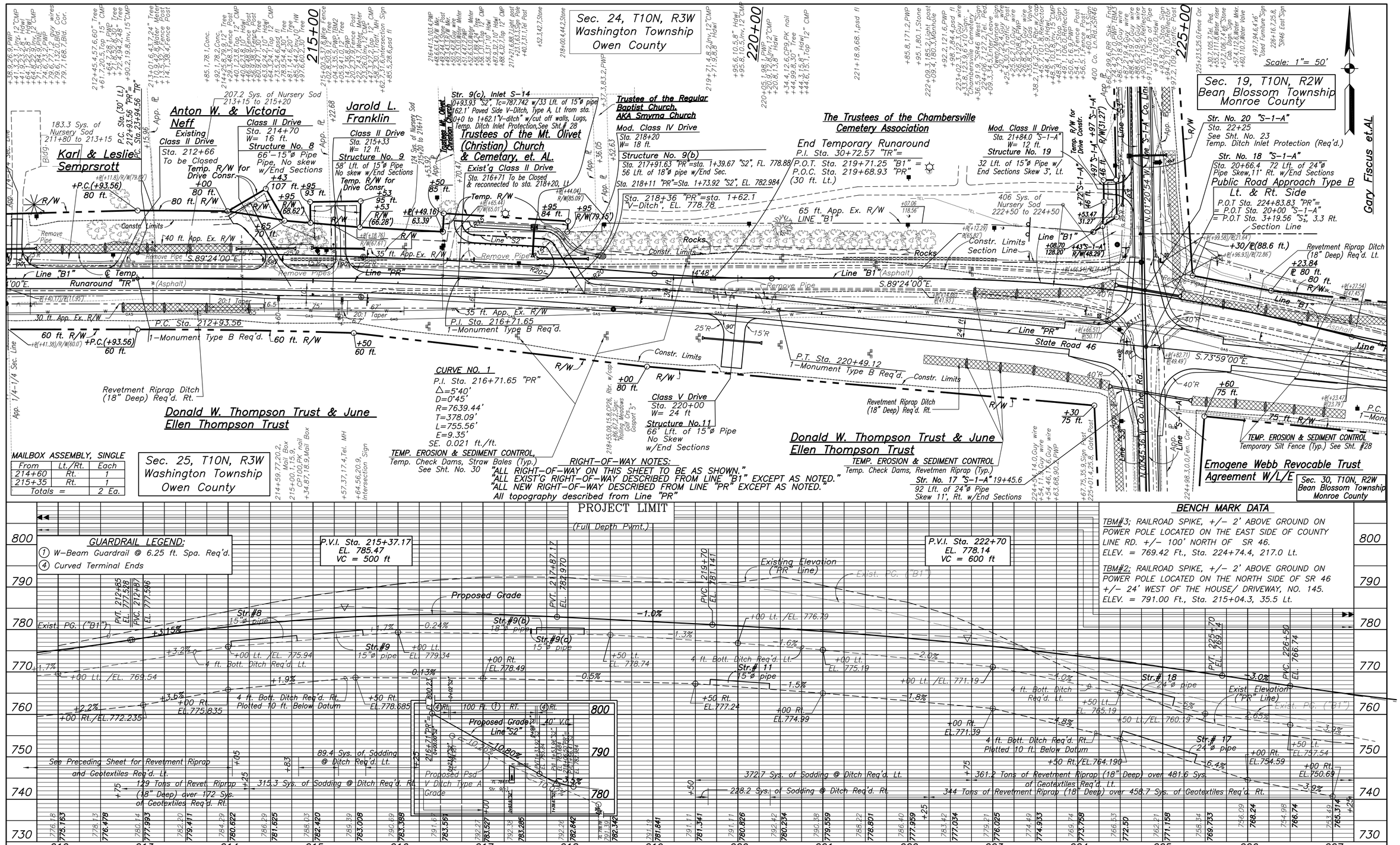


| | |
|---|---|
| RECOMMENDED FOR APPROVAL | DESIGN ENGINEER — DATE 10/11/2011 |
| DESIGNED AAC | DRAWN SSS |
| CHECKED ASA | CHECKED JTK |

ALI SALEEM ABUFARES — REGISTERED No. 87062 STATE OF INDIANA — PROFESSIONAL ENGINEER

# INDIANA DEPARTMENT OF TRANSPORTATION

# ROAD PLAN & PROFILE LINE "PR"

| HORIZONTAL SCALE | BRIDGE FILE |
|---|---|
| 1" = 50'-0" | |
| VERTICAL SCALE | DESIGNATION |
| 1" = 10'-0" | 9467555 |
| SURVEY BOOK | SHEETS |
| | 19 of 59 |
| CONTRACT | PROJECT NO. |
| 24382 | MWP-5000 (00C) |

Sec. 19, T10N, R2W
Bean Blossom Township
Monroe County

Gary Fiscus et.AL

P.I. Sta. 40+00.0 "TR"=
Sta. 227+63.79 "B1"=
P.O.C. Sta. 227+58.24 "PR"
(30' Lt.)

Revetment Riprap Ditch (18" Deep) Req'd. Lt.

Line "B1"

Line "PR"

Line "T-1-A"

Constr. Limits

P.O.C. Sta. 230+25 "PR"
P.O.T. Sta. 5+00 "T-1-A"

30 ft. App. Ex.R/W

30 ft. App. Ex. R/W

35 ft. App. Ex. R/W

60 ft. R/W

80 ft. R/W

75 ft. R/W

P.C. Sta. 228+22.83
1-Monument Type B Req'd.

Revetment Riprap Ditch (18" Deep) Req'd. Rt.

Structure No. 12
Sta. 230+03.0
Precast Reinforced Concrete Box Culvert
113 Lt. of 8 ft. Span x 4 ft. Rise
Skew 5°, Rt. W/ WingWalls

Cross Hatched areas indicate 57.3 Tons of Class 1 Riprap (18" Deep) over 76.3 sys. of Geotextiles (@ Box Ends)

TEMP. EROSION & SEDIMENT CONTROL
Temporary Silt Fence (Typ.)
See Sht. No. 30

TEMP. EROSION & SEDIMENT CONTROL
Temp. Check Dams, Revetment Riprap (Typ.)

Emogene Webb Revocable Trust
Aggrement W/L/E

S.83°44'00"E.

CURVE NO. 2
P.I. Sta. 237+50.78
Δ=50°00' Rt.
D=2°52'45"
R=1990.00'
T=927.95'
L=1736.60'
E=205.72'
SE. 0.06 ft./ft.

P.I. Sta. 237+50.78
1-Monument Type C Req'd.

S.33°44'00"E.

Mineral Lease in favor of Wolverine Gas & Oil Company, Inc. (Parcel 15B)

TEMP. EROSION & SEDIMENT CONTROL,
Temp. Check Dams, Straw Bales (Typ.)
See Sht. No. 30

Emogene Webb Revocable Trust
Aggrement W/L/E

Sec. 30, T10N, R2W
Bean Blossom Township
Monroe County

Modified Public Rd. Approach, Type A
Sta. 239+45 "PR"
W= 20 ft

Structure No. 13
144', 15" ø pipe
Skew 58°, Lt.
℄(+62.34) w/ End Sections
℄(83.17')

State Road 46

Hedrick Road

App. Ex. R/W

Class V Drive
Sta. 240+42
W= 24 ft.

Structure No. 14
48 Lft. of 15"ø Pipe
No skew, w/End Sections

Scale: 1"=50'

## HYDRAULIC DATA (STRUCTURE NO. 12)

| | | | |
|---|---|---|---|
| Drainage Area | 0.0867 Sq. Mile | Skew | 5°, Rt. |
| Design Discharge Q-100 | 90.0 $ft^3$/sec | Scour Depth – (Q-100) | ft. |
| Velocity – Q-100 | 8.48 ft/sec | Minimum Low Structure Elev. | 748.786 ft. |
| Elev. – Q-100 @ Structure | 747.22 ft. | Existing Backwater | 2.57 ft. |
| Area Req'd. Below Q100 Elev. | 19.44 Sq.ft. | Existing Low Structure Elev. | ft. |
| Area Provided | 19.44 Sq.ft. | Exist. Rd. Overflow Waterway Area | 0.0 Sq.ft. |
| Freeboard Provided | 1.57 ft. | Existing Waterway Opening | |
| Proposed Backwater | 0.92 ft. | Below Q100 Elev. | Sq.ft. |

## RIGHT-OF-WAY NOTES:

"ALL RIGHT-OF-WAY ON THIS SHEET TO BE AS SHOWN."
"ALL EXIST'G RIGHT-OF-WAY DESCRIBED FROM LINE "B1" EXCEPT AS NOTED."
"ALL ~~NEW~~ RIGHT-OF-WAY DESCRIBED FROM LINE "PR" EXCEPT AS NOTED."
All topography described from Line "PR"

PROJECT LIMIT
(Full Depth Pavement)

P.V.I. Sta. 230+50
EL. 754.74
VC = 800 ft

P.V.I. Sta. 240+00
EL. 771.36
VC = 600 ft

Proposed Grade

Exist. PG. ("B1")

Exist. Elev. ("PR")

Q100 EL. 747.22

Low Str. EL.748.786

Str. # 12 Sta. 230+03

1:4 Slope (Typ.)

FL 744.786

Str. Backfill Req'd. (Typ.)
1'-6" (Typ.)

4 ft. Bott. Ditch Req'd. Rt.
Plotted 10 ft. Below Datum

See Preceding Sht. for Revet. Riprap and Geotextiles Req'd. Lt.

See Preceding Sht. for Revet. Riprap & Geotextiles Req'd. Rt.

278.6 Sys. of Sodding @ Ditch Req'd. Lt.

298.1 Sys. of Sodding @ Ditch Req'd. Rt.

796.3 Sys. of Sodding @ Ditch Req'd. Lt.

917.3 Sys. of Sodding @ Ditch Req'd. Rt.

Str. #13
15" pipe

Str. #14
15" pipe

## BENCH MARK DATA

TBM#5; RAILROAD SPIKE, +/- 2' ABOVE GROUND ON POWER POLE PSK 60A S888 53 LOCATED +/- 120' EAST OF THE INTERSECTION OF THE FIRST ROAD & SR 46 EAST OF COUNTY LINE ROAD.
ELEV. = 775.61 Ft., Sta. 241+34.9, 83.5 Lt.

TBM#4; RAILROAD SPIKE, +/- 2' ABOVE GROUND ON FENCE POST OF THE GATE LOCATED ON THE SOUTH SIDE OF SR 46 EAST OF COUNTY LINE RD. UNDER THE CHURCH OF NAZARENE SIGN. EL. = 756.21 Ft., Sta. 234+30.7, 36.6 Lt.

## GUARDRAIL LEGEND:

1. W-Beam Guardrail @ 6.25 ft. Spa. Req'd.
2. Guardrail End Treatment Type "OS" Req'd.
3. Guardrail, W-Beam, Nested (100 ft) Req'd.

N=19,843.32 E=20,511.64
REBAR W/CAP CONC. H. W.
SIGN
CP 25 Sta. 229+62.75
@21.71 Lt. "PR"

N=19,737.24 E=20,731.94
PK NAIL FENCE TREE
CP 31 Sta. 232+02.53
@ 29.07 Rt. "PR"

ALI SALEEM ABU-ARAFEH
REGISTERED No. 870062 STATE OF INDIANA
PROFESSIONAL ENGINEER

RECOMMENDED FOR APPROVAL — DESIGN ENGINEER — DATE 10/11/2011

DESIGNED AAC | DRAWN SSS
CHECKED ASA | CHECKED JTK

INDIANA DEPARTMENT OF TRANSPORTATION

ROAD PLAN & PROFILE
LINE "PR"

| HORIZONTAL SCALE | BRIDGE FILE |
|---|---|
| 1" = 50'-0" | |
| VERTICAL SCALE | DESIGNATION |
| 1" = 10'-0" | 9467555 |
| SURVEY BOOK | SHEETS |
| | 20 of 59 |
| CONTRACT | PROJECT NO. |
| 24382 | MWP-5000 (00C) |

Sec. 19, T10N, R2W
Bean Blossom Township
Monroe County

CURVE NO. 2
P.I. Sta. 237+50.78
Δ =50°00' Rt.
D=2°52'45"
R=1990.00'
T=927.95'
L=1736.60'
E=205.72'
SE. 0.06 ft./ft.

Modified Public Rd. Approach, Type A
Sta. 239+45 "PR"
W= 20 ft
Structure No. 13
144', 15" ø pipe
Skew 58°, Lt.
w/ End Sections

TEMP. EROSION & SEDIMENT CONTROL
Temporary Silt Fence (Typ.)
See Sht. No. 30

Gary Fiscus et.AL

Emogene Webb Revocable Trust
Aggrement W/L/E

Hedrick Road

State Road 46

Asphalt

Remove Exist'g Pipe

Constr. Limits

30 ft. App. Ex. R/W

60 ft. R/W

80 ft. R/W

Line "PR"

Line "B1"

P.I. Sta. 237+50.78

S.33°44'00"E.

P.T. Sta. 58+01.18 "TR"=
P.T. Sta. 245+59.43 "PR"
(30' Lt.)

PT+59.43
60 ft.

P.I. Sta. 60+02.33 "TR"
=Sta. 247+60.58 "PR"
(30' Lt.)

End Project No. MWP-5000 (00C)
P.O.T. Sta. 248+00.0 Line "PR"
1-Monument Type B Req'd.

TEMP. EROSION & SEDIMENT CONTROL
Temporary Silt Fence (Typ.)
See Sht. No. 30

End Incidental Construction
P.O.T. Sta. 250+00.0 Line "PR"
O.P.O.T. Sta. 250+05.45, 1.74' Rt. Line "B1"

Scale: 1"=50'

Stinesville Road

Smith, Bernard R. & Carole M. Living Trust

Line "PR"="B1"

End Maintenance of Traffic
P.O.T. Sta. 250+38.93 "PR"=
P.T. Sta. 62+82.31 "TR"

P.O.T. Sta. 249+50.0 "PR"=
P.I. Sta. 61+93.74 "TR"

Revetment Riprap Ditch (18" Deep) Req'd. Rt.

Cross Hatched areas indicates 58.9 Tons of Class 2 Riprap (18" Deep) over 78.6 sys. of Geotextiles (@ Pipe Ends)

Mineral Lease in favor of Wolverine Gas & Oil Company, Inc. (Parcel 15B)

Class V Drive
Sta. 240+42
W= 24 ft.
Structure No. 14
48 Lft. of 15"ø Pipe
No skew, w/End Sections

Structure No. 15
Sta. 243+67
86 Lft. of 24"ø Pipe
w/2 End Sections, No Skew

TEMP. EROSION & SEDIMENT CONTROL
Temp. Check Dams, Straw Bales (Typ.)
See Sht. No. 30

TEMP. EROSION & SEDIMENT CONTROL
Temp. Check Dams, Revetment Riprap (Typ.)

Class V Drive
Sta. 248+38
W= 24 ft.
Structure No. 16
44 Lft. of 15"ø Pipe
Skew 9°, Lt.
w/End Sections

Sec. 30, T10N, R2W
Bean Blossom Township
Monroe County

RIGHT-OF-WAY NOTES:
"ALL RIGHT-OF-WAY ON THIS SHEET TO BE AS SHOWN."
"ALL EXIST'G RIGHT-OF-WAY DESCRIBED FROM LINE "B1" EXCEPT AS NOTED."
"ALL NEW RIGHT-OF-WAY DESCRIBED FROM LINE "PR" EXCEPT AS NOTED."
All topography described from Line "PR"

PROJECT LIMIT
(Full Depth Pvmt.)

P.V.I. Sta. 240+00
EL. 771.36
VC = 600 ft

P.V.I. Sta. 245+00
EL. 771.36
VC = 400 ft

200 ft. Incidental Construction

Exist. Elev. ("PR")

Exist. PG. ("B1")

Proposed Grade

Str.#13 15"ø pipe

Str.#14 15"ø pipe

Str.# 15 Sta. +67

24"ø pipe

End Str.#15 24"ø pipe

Str.#16 15"ø pipe

Transition From 4 ft. Bottom to "V" Ditch

4 ft. Bott. Ditch Req'd. Lt.

4 ft. Bott. Ditch Req'd. Rt. Plotted 10 ft. Below Datum

Transition from 4 ft. Bott. to "V" Ditch 15.4 Tons of Revet. Riptap (18" Deep) over 20.6 Sys. of Geotextiles Req'd. Rt.

See Preceding Sht. for Sodding @ Ditches Req'd. Rt.

69.9 Sys. of Sodding @ Ditch Req'd. Lt.

114.7 Sys. of Sodding @ Ditch Req'd. Rt.

229.3 Sys. of Sodding @ Ditch Req'd. Rt.

475.9 Sys. of Sodding @ Ditch Req'd. Lt.

206.4 Tons of Revetment Riprap (18" Deep) over 275.2 Sys. of Geotextiles Req'd. Rt.

BENCH MARK DATA
TBM#5; RAILROAD SPIKE, +/- 2' ABOVE GROUND ON POWER POLE PSK 60A S888 53 LOCATED +/- 120' EAST OF THE INTERSECTION OF THE FIRST ROAD & SR 46 EAST OF COUNTY LINE ROAD.
ELEV. = 775.61 Ft., Sta. 241+34.9, 83.5 Lt.
TBM#4; RAILROAD SPIKE, +/- 2' ABOVE GROUND ON FENCE POST OF THE GATE LOCATED ON THE SOUTH SIDE OF SR 46 EAST OF COUNTY LINE RD. UNDER THE CHURCH OF NAZARENE SIGN. EL. = 756.21 Ft., Sta. 234+30.7, 36.6 Lt.

N=18,590.98 E=22,097.18
REBAR W/CAP
Line "PR"
CP 8 Sta. 250+35.01
@ 31.31 Lt. "PR"

ALI SALEEM ABU-ARQUB
REGISTERED No. 870062 STATE OF INDIANA
PROFESSIONAL ENGINEER

RECOMMENDED FOR APPROVAL — DESIGN ENGINEER — DATE 10/11/2011

DESIGNED AAC | DRAWN SSS
CHECKED ASA | CHECKED JTK

INDIANA DEPARTMENT OF TRANSPORTATION

ROAD PLAN & PROFILE
LINE "PR"

| HORIZONTAL SCALE | BRIDGE FILE |
|---|---|
| 1" = 50'-0" | |
| VERTICAL SCALE | DESIGNATION |
| 1" = 10'-0" | 9467555 |
| SURVEY BOOK | SHEETS |
| | 21 of 59 |
| CONTRACT | PROJECT NO. |
| 24382 | MWP-5000 (00C) |

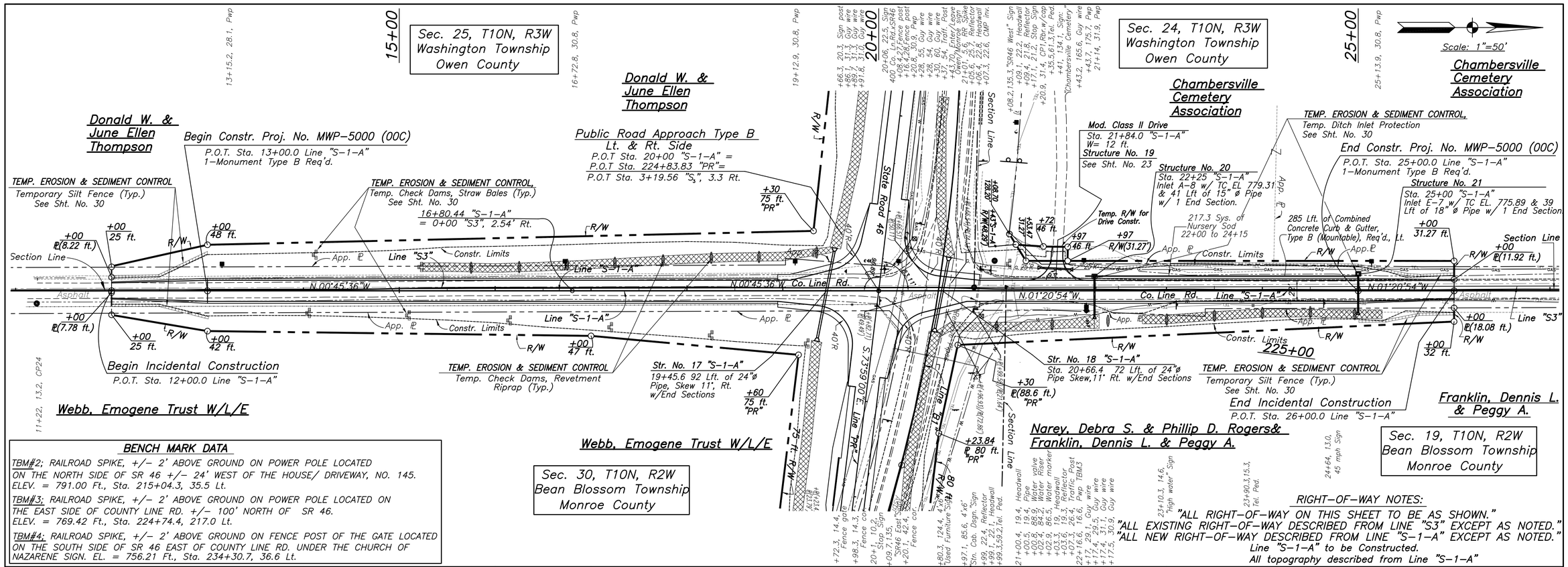


## BENCH MARK DATA

TBM#2; RAILROAD SPIKE, +/- 2' ABOVE GROUND ON POWER POLE LOCATED ON THE NORTH SIDE OF SR 46 +/- 24' WEST OF THE HOUSE/ DRIVEWAY, NO. 145. ELEV. = 791.00 Ft., Sta. 215+04.3, 35.5 Lt.

TBM#3; RAILROAD SPIKE, +/- 2' ABOVE GROUND ON POWER POLE LOCATED ON THE EAST SIDE OF COUNTY LINE RD. +/- 100' NORTH OF SR 46. ELEV. = 769.42 Ft., Sta. 224+74.4, 217.0 Lt.

TBM#4; RAILROAD SPIKE, +/- 2' ABOVE GROUND ON FENCE POST OF THE GATE LOCATED ON THE SOUTH SIDE OF SR 46 EAST OF COUNTY LINE RD. UNDER THE CHURCH OF NAZARENE SIGN. EL. = 756.21 Ft., Sta. 234+30.7, 36.6 Lt.

## RIGHT-OF-WAY NOTES:

"ALL RIGHT-OF-WAY ON THIS SHEET TO BE AS SHOWN."
"ALL EXISTING RIGHT-OF-WAY DESCRIBED FROM LINE "S3" EXCEPT AS NOTED."
"ALL NEW RIGHT-OF-WAY DESCRIBED FROM LINE "S-1-A" EXCEPT AS NOTED."
Line "S-1-A" to be Constructed.
All topography described from Line "S-1-A"

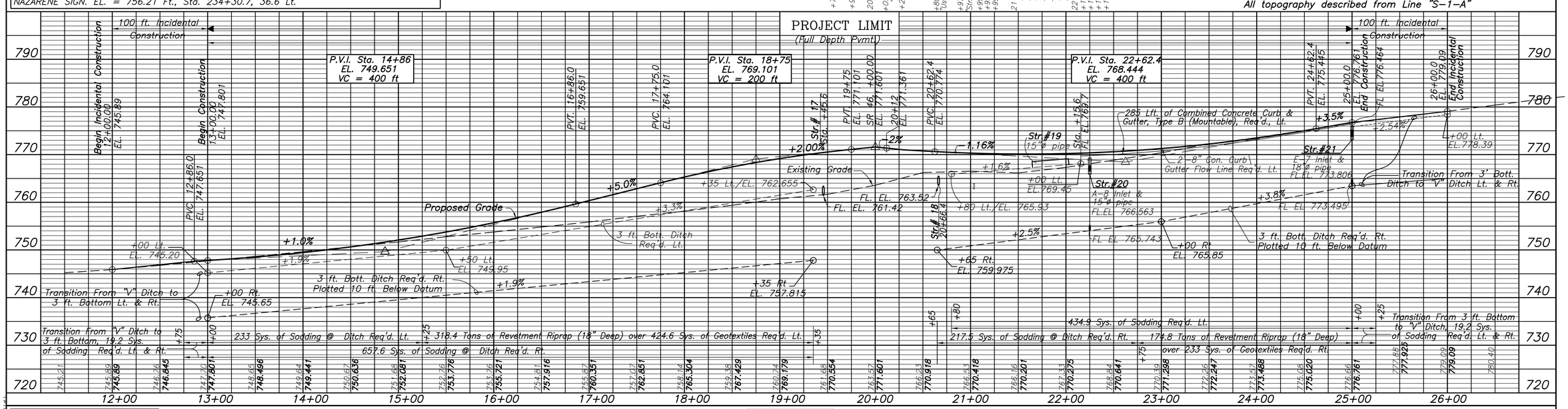


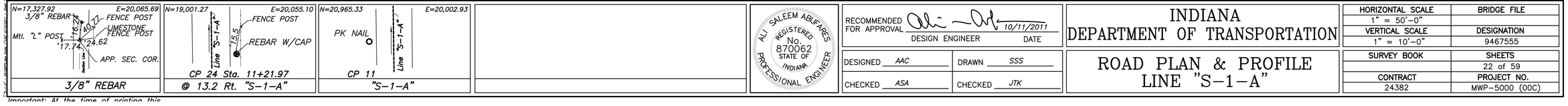


ALI SALEEM ABU-FARES
REGISTERED No. 870062 STATE OF INDIANA
PROFESSIONAL ENGINEER

RECOMMENDED FOR APPROVAL — DESIGN ENGINEER — DATE 10/11/2011

DESIGNED AAC | DRAWN SSS
CHECKED ASA | CHECKED JTK

# INDIANA DEPARTMENT OF TRANSPORTATION

# ROAD PLAN & PROFILE LINE "S-1-A"

| HORIZONTAL SCALE | BRIDGE FILE |
|---|---|
| 1" = 50'-0" | |
| VERTICAL SCALE | DESIGNATION |
| 1" = 10'-0" | 9467555 |
| SURVEY BOOK | SHEETS |
| | 22 of 59 |
| CONTRACT | PROJECT NO. |
| 24382 | MWP-5000 (00C) |

Important: At the time of printing this

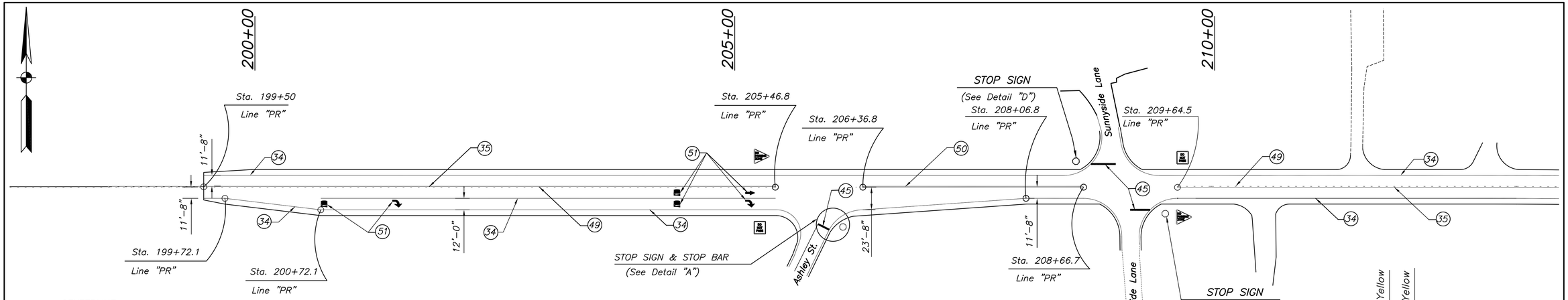


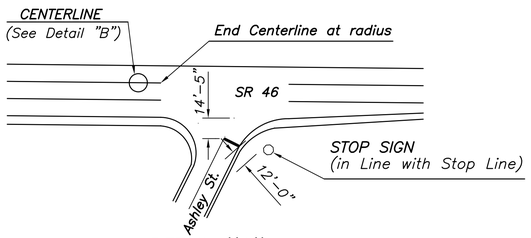


DETAIL "A"

PAVEMENT MARKING AND SIGN DETAIL AT ASHLEY DRIVE INTERSECTING SR46
(Not to Scale)
Note: Pavement Marking and Sign Locations to be field-approved by Engineer

| THERMOPLASTIC LINE MARKING LEGEND | |
|---|---|
| DESCRIPTION | |
| 33 | Snowplowable Raised Pavement Markers |
| 45 | 24 inch White Stop Line, Thermoplastic |
| 34 | 4 inch Solid White Paint Line |
| 35 | 4 inch Solid Yellow Paint Line |
| 49 | 4 inch Broken Yellow Paint Line |
| 50 | 4 inch Solid Double Yellow Paint Line |
| 51 | Pavement Message Markings, White Thermoplastic, Lane Indication Arrow |

Note – SIGN LOCATION SHALL BE APPROVED BY TRAFFIC ENGINEER
Note – MODIFIED SIGNS SHALL BE APPROVED BY THE TRAFFIC ENGINEER.
CONTRACTOR TO PROVIDE SHOP DRAWING.

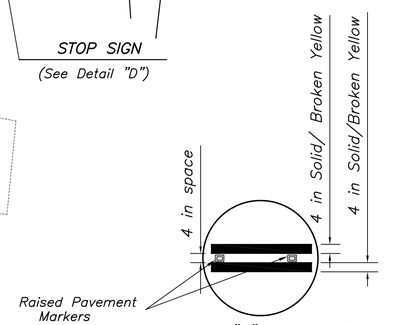


DETAIL "B" – CENTERLINE
(Not to Scale)

| DELINEATORS AT HORIZONTAL CURVE | | | |
|---|---|---|---|
| From Sta. | To Sta. | Position | Spacing (ft.) |
| 212+00 | 221+50 | * North and **South side of SR 46 | 260 |
| 227+00 | 247+00 | * North and **South side of SR 46 | 130 |

* 2 to 6 ft. outside roadway edge
** 2 to 6 ft. outside shoulder edge

| RAISED PAVEMENT MARKER | | | | |
|---|---|---|---|---|
| From Sta. | To Sta. | Position | Spacing (ft.) | Each |
| 199+50 | 205+46.8 | Center Line | 40 | 16 |
| 206+36.8 | 208+66.7 | Center Line | 40 | 7 |
| 209+64.5 | 224+21.5 | Center Line | 40 | 37 |
| 225+46.8 | 239+30 | Center Line | 40 | 35 |
| 240+94 | 250+00 | Center Line | 40 | 23 |

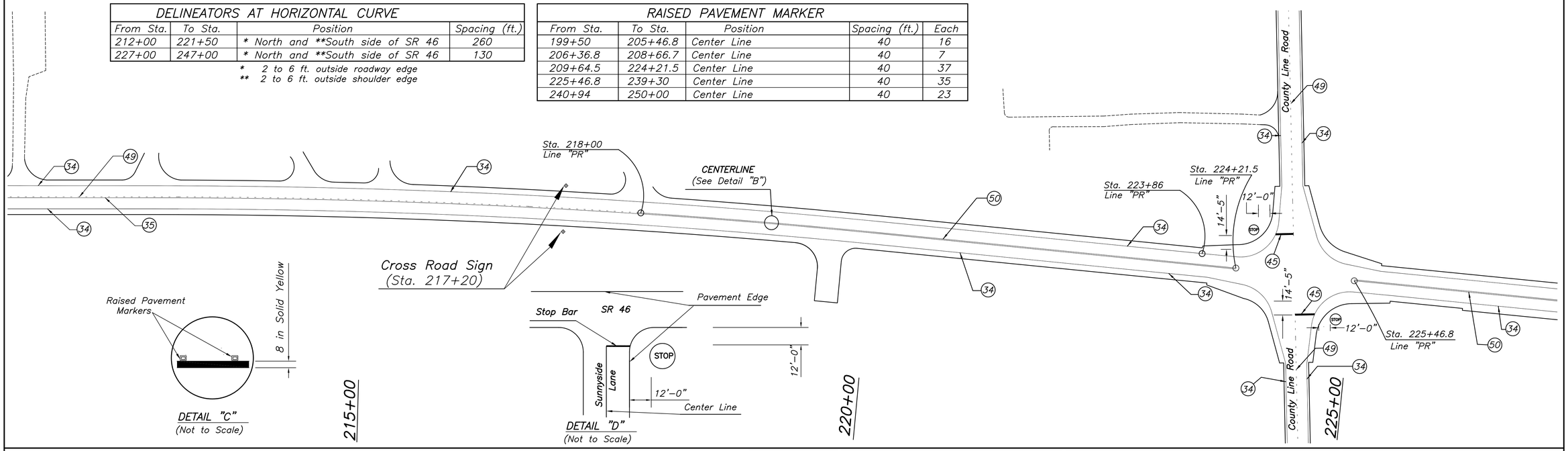


DETAIL "C"
(Not to Scale)

DETAIL "D"
(Not to Scale)


ASA Engineering Consultants, Inc.
3717 Woodview Trace
Indianapolis, Indiana 46268
(317) 334-1334


ALI SALEEM ABU-FARES
REGISTERED No. 870062 STATE OF INDIANA
PROFESSIONAL ENGINEER

RECOMMENDED FOR APPROVAL — DESIGN ENGINEER — October 11, 2011 — DATE

DESIGNED SSS | DRAWN JimB
CHECKED ASA | CHECKED AAC

INDIANA DEPARTMENT OF TRANSPORTATION

PAVEMENT MARKING

| HORIZONTAL SCALE | BRIDGE FILE |
|---|---|
| 1" = 50'-0" | |
| VERTICAL SCALE | DESIGNATION |
| As Noted | 9467555 |
| SURVEY BOOK | SHEETS |
| | 24 of 59 |
| CONTRACT | PROJECT NO. |
| 24382 | MWP-5000 (00C) |

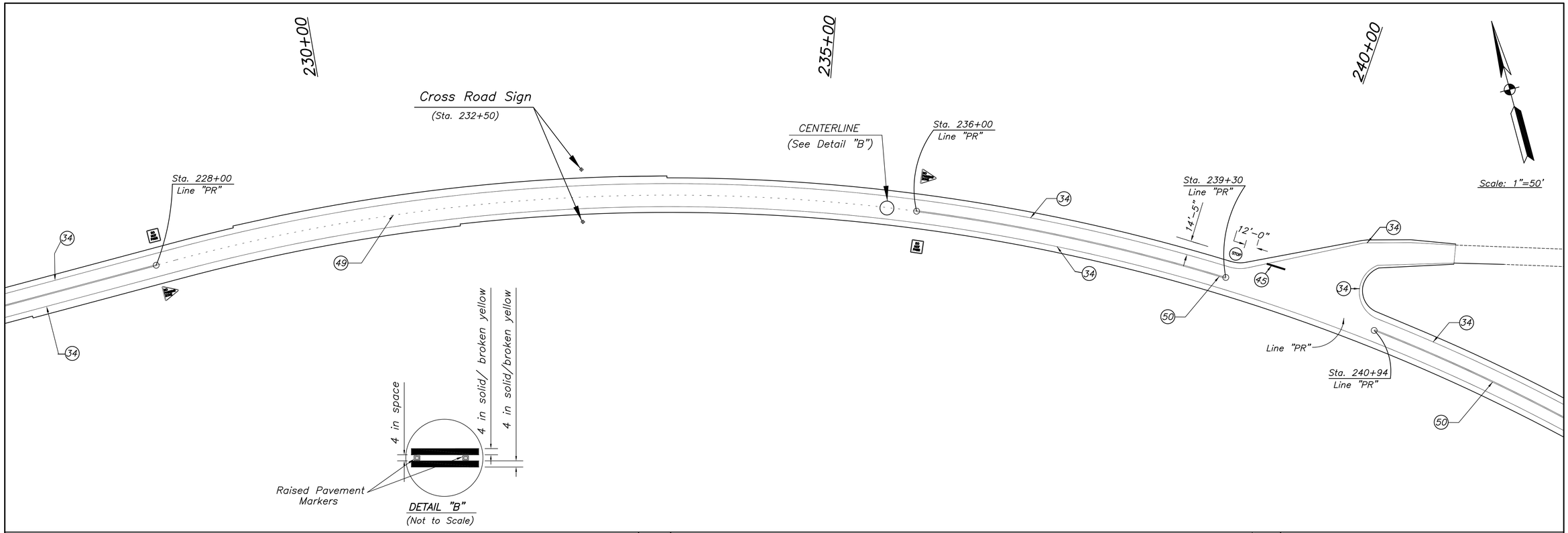


| DELINEATORS AT HORIZONTAL CURVE | | | |
|---|---|---|---|
| From Sta. | To Sta. | Position | Spacing (ft.) |
| 212+00 | 221+50 | *North and **South side of SR 46 | 260 |
| 227+00 | 247+00 | *North and **South side of SR 46 | 130 |

* 2 to 6 ft. outside roadway edge
** 2 to 6 ft. outside shoulder edge

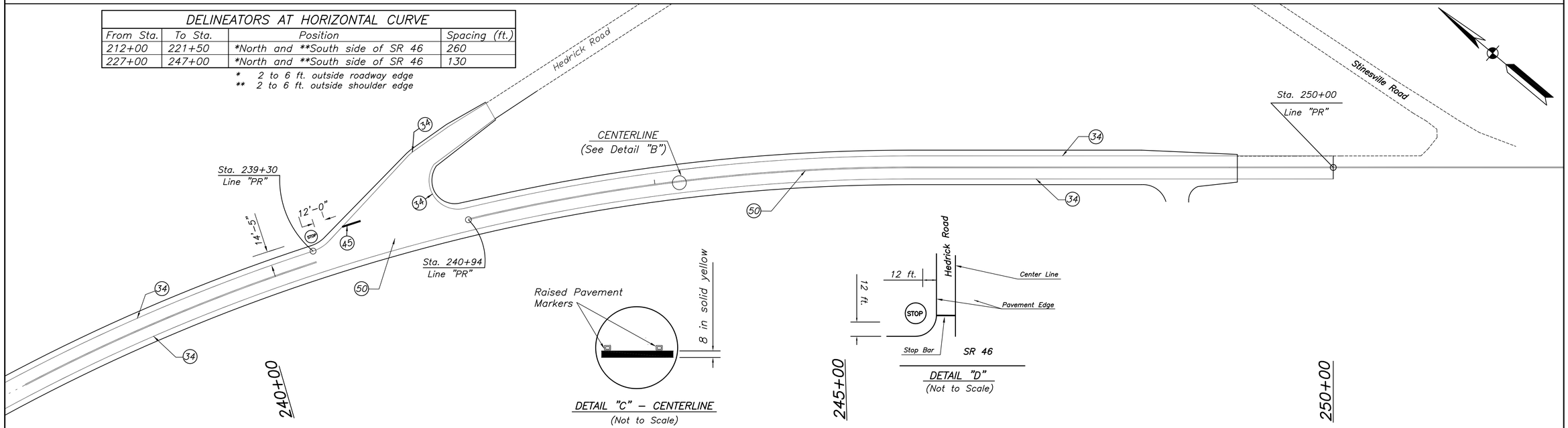


**ASA Engineering Consultants, Inc.**
3717 Woodview Trace
Indianapolis, Indiana 46268
(317) 334-1334

ALI SALEEM ABU-FARES
REGISTERED No. 870062 STATE OF INDIANA
PROFESSIONAL ENGINEER

RECOMMENDED FOR APPROVAL — DESIGN ENGINEER — October 11, 2011 — DATE

DESIGNED SSS | DRAWN JimB
CHECKED ASA | CHECKED AAC

INDIANA DEPARTMENT OF TRANSPORTATION

PAVEMENT MARKING

| HORIZONTAL SCALE | BRIDGE FILE |
|---|---|
| 1" = 50'-0" | |
| VERTICAL SCALE | DESIGNATION |
| 1" = 10'-0" | 9467555 |
| SURVEY BOOK | SHEETS |
| | 25 of 59 |
| CONTRACT | PROJECT NO. |
| 24382 | MWP-5000 (00C) |

| PROJECT | DESIGNATION |
|---|---|
| MWP-5000 (00C) | 9467555 |
| CONTRACT | |
| 24382 | |

# INDIANA DEPARTMENT OF TRANSPORTATION

# ROAD PLANS

## STATE ROAD 46 AT R.P. 42+34

## PROJECT NO. MWP-5000 (00C)P.E.
MWP-5000 (00C)R/W
MWP-5000 (00C)CONST.

| TRAFFIC DATA | COUNTY LINE ROAD | STATE ROAD 46 |
|---|---|---|
| A.A.D.T. (2008) | 1,845 V.P.D. | 13,360 V.P.D. |
| A.A.D.T. (2028 PROJECTED) | 2,234 V.P.D. | 16,067 V.P.D. |
| D.H.V. (2028 PROJECTED) | 226 V.P.H. | 1,427 V.P.H. |
| DIRECTIONAL DISTRIBUTION | 50 % | 50 % |
| TRUCKS | 3% A.A.D.T. | 5% A.A.D.T. |
| | 10% D.H.V. | 9% D.H.V. |
| **DESIGN DATA** | | |
| DESIGN SPEED | 45 Mph | 55 Mph |
| PROJECT DESIGN CRITERIA | 3R NON-FREEWAY | 3R NON-FREEWAY |
| FUNCTIONAL CLASSIFICATION | LOCAL ROAD | PRINCIPAL ARTERIAL |
| RURAL/URBAN | RURAL | RURAL |
| TERRAIN | ROLLING | ROLLING |
| ACCESS CONTROL | NONE | NONE |

Sight Distance Improvement at the intersection of State Road 46 and County Line Road, approximately 4 miles east of US 231 east junction with SR 46 at R.P. 42+34, located in Sections 24, 25, 19, and 30; T10N, R3W & R2W, in Beanblossom Township, Owen/Monroe Counties, Indiana.

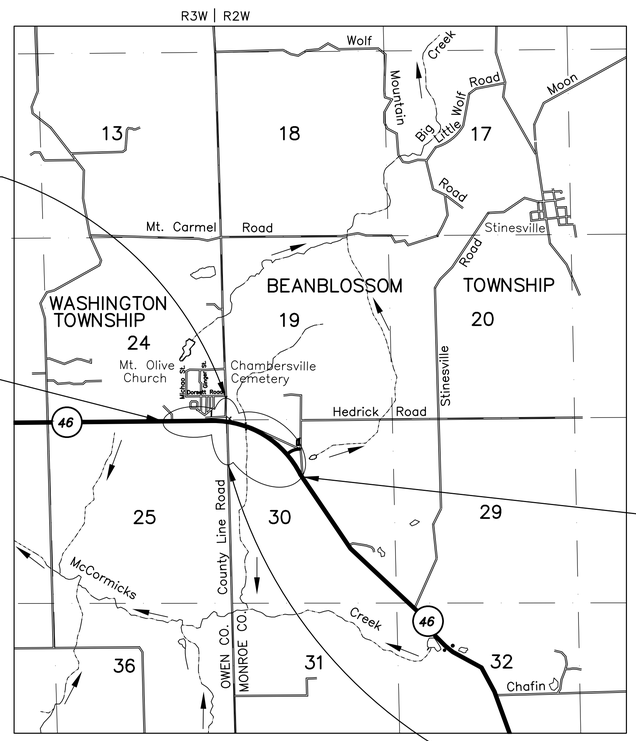


END CONSTR. PROJ. No. MWP-5000 (00C)
P.O.T. Sta. 25+00.00 Line "S-1-A"

BEGIN PROJECT NO. MWP-5000 (00C)
P.O.T. Sta. 201+00.00 Line "PR"

END PROJECT NO. MWP-5000 (00C)
P.O.T. Sta. 248+00.00 Line "PR"

BEGIN CONSTR. PROJ. No. MWP-5000 (00C)
P.O.T. Sta. 13+00.00 Line "S-1-A"

OWEN/MONROE COUNTIES

LOCATION PLAN
Scale 1:24000

Scale 1:24000

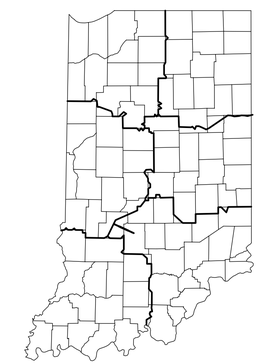

PROJECT LOCATION SHOWN BY

| STATE ROAD 46 LINE "PR" | | COUNTY LINE ROAD LINE "S-1-A" | |
|---|---|---|---|
| GROSS LENGTH: | 0.89 Miles | GROSS LENGTH: | 0.201 Miles |
| NET LENGTH: | 0.89 Miles | NET LENGTH: | 0.201 Miles |
| MAXIMUM GRADE: | -5.25 % | MAXIMUM GRADE: | +5.0 % |

H.U.C. 05120202020030
Longitude = 86°41'05.47"W.
Latitude = 39°41'05.47"W.

**INDIANA DEPARTMENT OF TRANSPORTATION STANDARD SPECIFICATIONS DATED 2011 TO BE USED WITH THESE PLANS**

PLANS PREPARED BY: ASA ENGINEERING CONSULTANTS, INC.
3717 Woodview Trace, Indianapolis, Indiana 46268 (317) 334-1334
CERTIFIED BY: 10/11/2011 DATE
APPROVED FOR LETTING: INDIANA DEPARTMENT OF TRANSPORTATION DATE

ALI SALEEM ABUFARES REGISTERED No. 870062 STATE OF INDIANA PROFESSIONAL ENGINEER

| BRIDGE FILE |
|---|
| |
| DESIGNATION |
| 9467555 |
| SHEETS |
| 1 of 59 |

| CONTRACT | PROJECT NO. |
|---|---|
| 24382 | MWP-5000 (00C) |

Dgn:04-10DTS.dgn, Lvl: 7/1/2011, User:ASA (Gaspar1)

# UTILITIES

**WATER**
Bean Blossom–Patricksburg Water Co.
86 East Market Street
P. O. Box 186
Spencer, Indiana 47460
Attn: Cathy Dunning
Telephone: (812) 829–2283

**ELECTRIC**
South Central Indiana REMC
300 Morton Ave.
Martinsville, Indiana 46151
Attn: Barron Smith
Telephone: (765) 352–4731

**GAS**
Community Natural Gas Co.
261 West Clay Street
P.O. Box 442
Spencer, Indiana 47460
Attn: Tony Abrell
Telephone: (812) 829–3505

**TELEPHONE**
Smithville Telephone Co.
1600 West Temperance Street
Ellettsville, IN 47429
Attn: Ron Hahn
Telephone: (812) 935–7203

**SANITARY SEWERS**
N/A

# REVISIONS

| SHEET NO. | DATE | REVISED |
|---|---|---|
| | | |

# R/W INDEX

| SHEET NO. | DESIGNATION |
|---|---|
| | |

# GENERAL NOTES

| | |
|---|---|
| ** | All Earth Shoulders, Median Areas, and Cut and Fill slopes shall be plain or mulch seeded except where Sodding is specified. |
| | The final Cross Sections of the "Grading Contract" will be the original cross sections of the "Paving Contract." However, partial or complete cross sections shall be taken if necessary to determine the actual excavation quantities. |
| | The paper relocation will be cross–sectioned by the Engineer before construction. |
| | Existing Asphalt pavement located outside the construction limits, between Station_____ and Station_____, shall be removed as directed. |
| | The quantity of peat excavation shown on the plans has been estimated on the basis of theoretical cross sections by using treatment of existing fills, treatment by removal, or treatment by displacement, where each treatment applies. |

** REPRESENTS GENERAL NOTES REQUIRED

# INDEX


| SHEET NO. | DESIGNATION |
|---|---|
| 1 | TITLE SHEET |
| 2 | INFORMATION SHEET |
| 3–6 | TYPICAL CROSS SECTIONS (LINE "PR," 3 SHEETS, LINE "S–1–A," 1 SHEET) |
| 7–8 | MAINTENANCE OF TRAFFIC (TYPICAL CROSS SECTIONS) 2 SHEETS |
| 9 | MAINTENANCE OF TRAFFIC (SUPERELEVATION TRANSITION DIAGRAMS) |
| 10–13 | MAINTENANCE OF TRAFFIC PHASE I & II (4 SHEETS) |
| 14–17 | MAINTENANCE OF TRAFFIC PHASE III (4 SHEETS) |
| 18–22 | ROAD PLAN AND PROFILE (LINE "PR," 4 SHEETS, LINE "S–1–A," 1 SHEET) |
| 23 | SUPERELEVATION TRANSITION DIAGRAMS |
| 24–25 | PAVEMENT MARKING (LINE "PR," 2 SHEETS) |
| 26 | GENERAL PLAN |
| 27–30 | ROAD SUMMARY OF QUANTITIES (4 SHEETS) |
| 31–56 | ROADWAY CROSS SECTIONS (LINE "PR," 21 SHEETS, LINE "S–1–A," 5 SHEETS) |
| 57–59 | WATERWAY CROSS SECTIONS (LINE "T–2–A," 1 SHEET, LINE "T–1–A," 2 SHEETS) |



ASA Engineering Consultants, Inc.
3717 Woodview Trace
Indianapolis, Indiana 46268
(317) 334–1334


ALI SALEEM ABUFARES
REGISTERED No. 870062 STATE OF INDIANA
PROFESSIONAL ENGINEER

RECOMMENDED FOR APPROVAL — DESIGN ENGINEER — October 11, 2011 — DATE

DESIGNED AAC | DRAWN JimB
CHECKED ASA | CHECKED ASA

INDIANA DEPARTMENT OF TRANSPORTATION

INFORMATION SHEET

| HORIZONTAL SCALE | BRIDGE FILE |
|---|---|
| As Noted | |
| **VERTICAL SCALE** | **DESIGNATION** |
| As Noted | 9467555 |
| **SURVEY BOOK** | **SHEETS** |
| | 2 of 59 |
| **CONTRACT** | **PROJECT NO.** |
| 24382 | MWP–5000 (00C) |

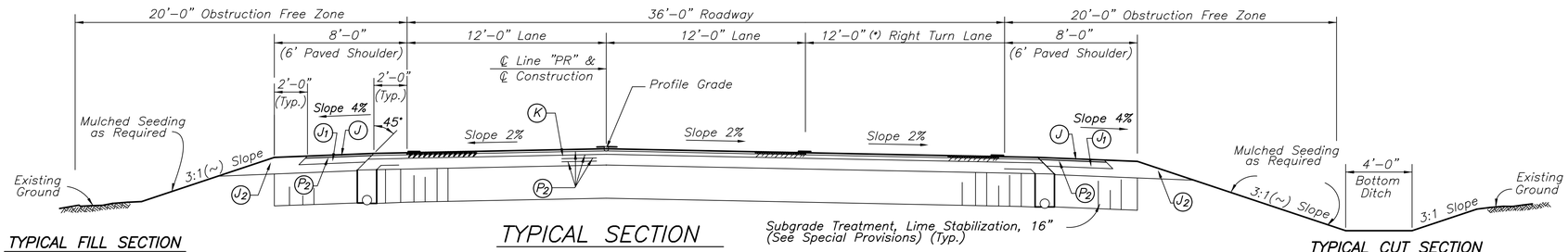


## TYPICAL FILL SECTION

(~): Side Slope varies (from 3:1 to 2:1) From Sta. 202+59.17 to Sta. 203+39.17, Lt.
(~): Side Slope is 2:1 From Sta. 203+39.17 to Sta. 208+06.08, Lt.

## TYPICAL SECTION

### Sta. 201+00 to Sta. 208+06.8 Line "PR"

Scale: 1/4" = 1'–0"

(*): Varies 12' to 0' From Sta. 206+36.8 to Sta. 208+06.8 "PR"

## TYPICAL CUT SECTION

(~): Side Slope varies (from 3:1 to 2:1) From Sta. 205+95.35 to Sta. 206+36.60, Rt.
(~): Side Slope is 2:1 From Sta. 206+36.60 to Sta. 208+06.80, Rt.

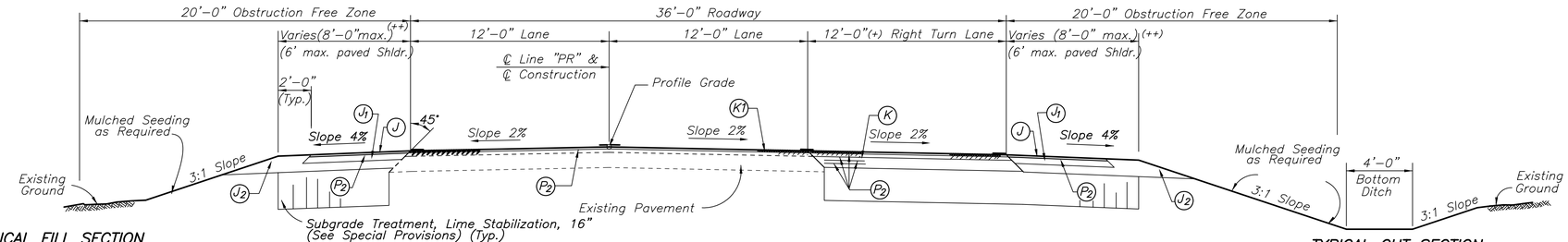


## TYPICAL FILL SECTION

## TYPICAL SECTION

### Sta. 199+50 to Sta. 201+00 Line "PR"

Scale: 1/4" = 1'–0"

(+): Varies 0' to 12' From Sta. 199+72.1 to Sta. 200+72.10 "PR"
(++): Varies 4' to 8' From Sta. 199+50 to Sta. 201+00 "PR"

## TYPICAL CUT SECTION

**NOTE:**
No Riprap to be placed in ditches within Rock Area.

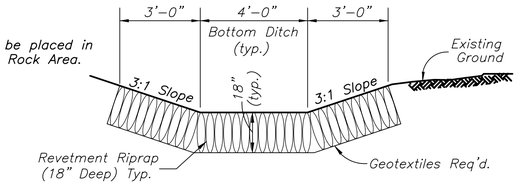


## TYPICAL RIPRAP SIDE DITCH

Scale: 3/8" = 1'–0"

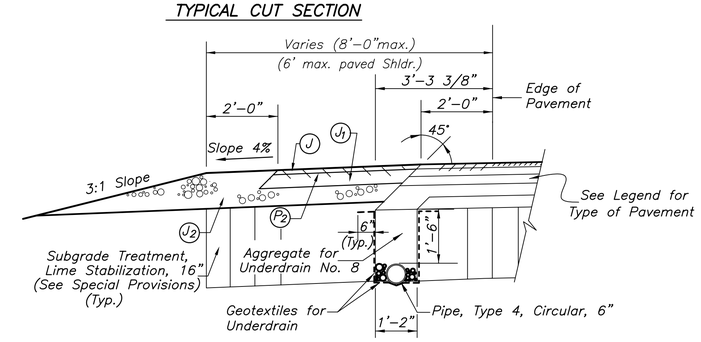


## UNDERDRAIN DETAIL

Scale: 1/2" = 1'–0"

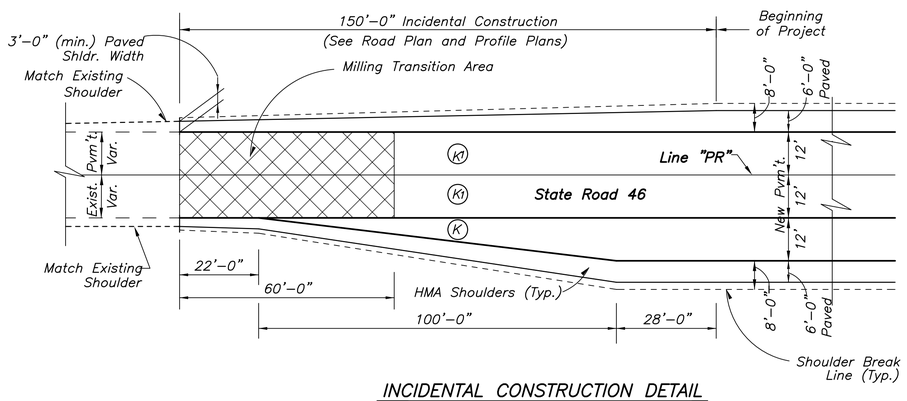


## INCIDENTAL CONSTRUCTION DETAIL

Scale: 1" = 20'–0"

## LEGEND

**(K)**
- 165 #/SYS. QC/QA–HMA, 3, 70, Surface, 9.5 mm
- 275 #/SYS. QC/QA–HMA, 3, 70, Intermediate, 19.0 mm
- 275 #/SYS. QC/QA–HMA, 3, 64, Base, 19.0 mm
- 250 #/SYS. QC/QA–HMA, 5, 76, Intermediate, OG19.0 mm
- 330 #/SYS. QC/QA–HMA, 3, 64, Base, 19.0 mm
- Subgrade Treatment, Lime Stabilization, 16" (See Special Provisions) (Typ)

**(R)**
- 165 #/SYS. QC/QA–HMA, 3, 70, Surface, 9.5 mm
- 275 #/SYS. QC/QA–HMA, 3, 70, Intermediate, 19.0 mm
- Variable Depth QC/QA–HMA, 3, 70, Intermediate, 19.0 mm

**(K1)**
- 165 #/SYS. QC/QA–HMA, 3, 70, Surface, 9.5 mm
- Variable Depth QC/QA–HMA, 3, 70, Intermediate, 19.0 mm
- (220 #/SYS. QC/QA–HMA, 3, 70, Intermediate, 19.0 mm minimum)

**(J)** 165 #/SYS. QC/QA–HMA, 1, 64, Surface, 9.5 mm

**(J1)** 495 #/SYS. QC/QA–HMA, 1, 64, Intermediate, 19.0 mm

**(J2)** 6" Compacted Aggregate, No. 53, Base

**(J3)** Variable Compacted Aggregate, No. 53, Base (3" Min.)

**(P2)** Asphalt for Tack Coat between all layers of HMA


ASA Engineering Consultants, Inc.
3717 Woodview Trace
Indianapolis, Indiana 46268
(317) 334–1334


ALI SALEEM ABU-FARES
REGISTERED No. 870062 STATE OF INDIANA
PROFESSIONAL ENGINEER

RECOMMENDED FOR APPROVAL — DESIGN ENGINEER — October 11, 2011 — DATE

DESIGNED AAC | DRAWN JimB
CHECKED ASA | CHECKED AKS

INDIANA DEPARTMENT OF TRANSPORTATION

TYPICAL CROSS–SECTIONS
LINE "PR"

| HORIZONTAL SCALE | BRIDGE FILE |
|---|---|
| As Noted | |
| VERTICAL SCALE | DESIGNATION |
| As Noted | 9467555 |
| SURVEY BOOK | SHEETS |
| | 3 of 59 |
| CONTRACT | PROJECT NO. |
| 24382 | MWP–5000 (00C) |

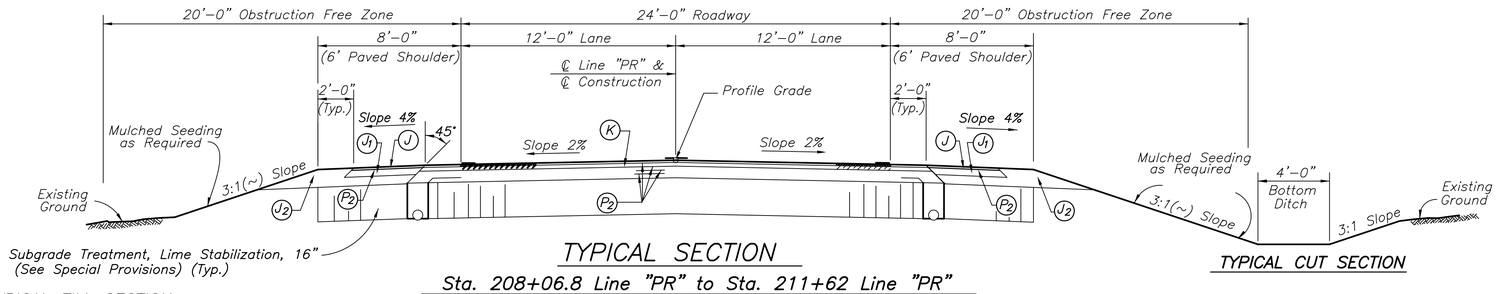


TYPICAL FILL SECTION

TYPICAL CUT SECTION

## TYPICAL SECTION

**Sta. 208+06.8 Line "PR" to Sta. 211+62 Line "PR"**

**Sta. 221+51 Line "PR" to Sta. 226+10 Line "PR"**

**Sta. 247+70 Line "PR" to Sta. 248+00 Line "PR"**

Scale: 1/4" = 1'–0"

(~): Side Slope is 2:1 From Sta. 208+06.80 to Sta. 208+42.92, Lt.

(~): Side Slope varies (from 2:1 to 3:1) From Sta. 208+42.92 to Sta. 208+84.17, Lt.

(~): Side Slope is 2:1 From Sta. 208+06.80 to Sta. 208+61.12, Rt.

(~): Side Slope varies (from 2:1 to 3:1) From Sta. 208+61.12 to Sta. 209+02.37, Rt.

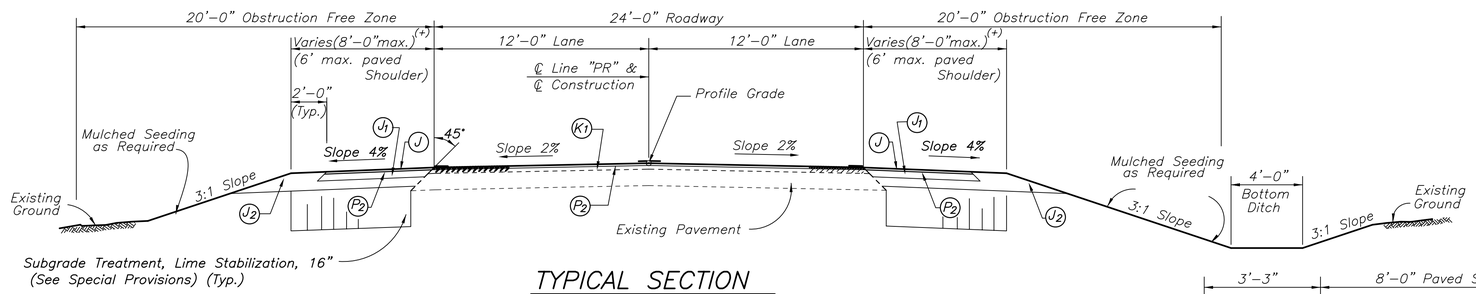


TYPICAL FILL SECTION

TYPICAL CUT SECTION

## TYPICAL SECTION

**Sta. 248+00 Line "PR" to Sta. 249+00 Line "PR"**

Scale: 1/4" = 1'–0"

(+): Varies 8' to 4' From Sta. 248+00 to Sta. 249+00 "PR"

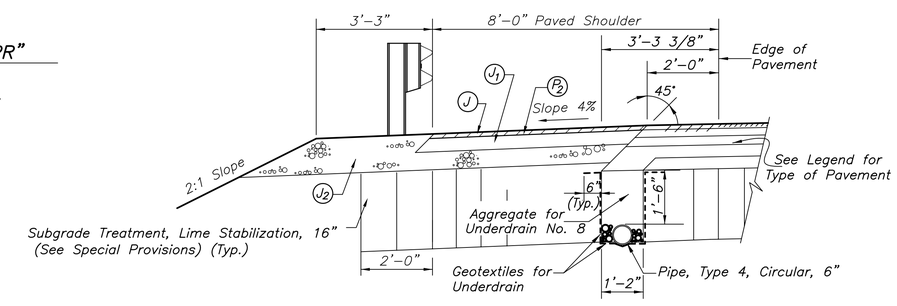


## TYPICAL SHOULDER DETAIL WITH GUARD RAIL

Scale: 1/2" = 1'–0"

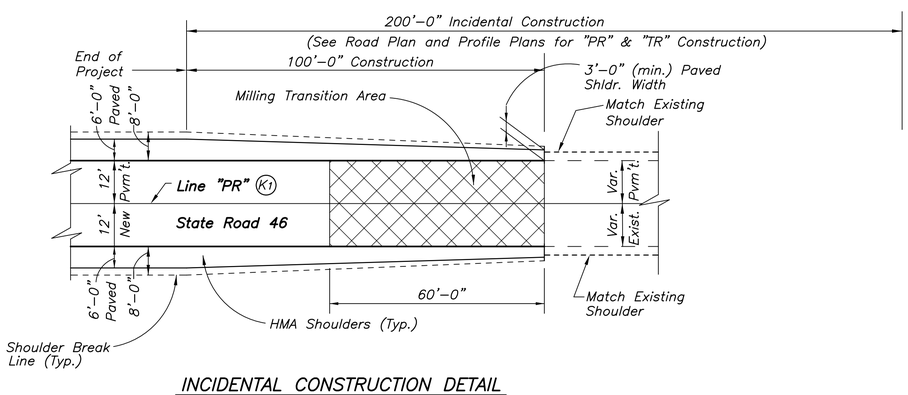


## INCIDENTAL CONSTRUCTION DETAIL

Scale: 1" = 20'–0"

## LEGEND

(K)
- 165 #/SYS. QC/QA–HMA, 3, 70, Surface, 9.5 mm
- 275 #/SYS. QC/QA–HMA, 3, 70, Intermediate, 19.0 mm
- 275 #/SYS. QC/QA–HMA, 3, 64, Base, 19.0 mm
- 250 #/SYS. QC/QA–HMA, 5, 76, Intermediate, OG19.0 mm
- 330 #/SYS. QC/QA–HMA, 3, 64, Base, 19.0 mm
- Subgrade Treatment, Lime Stabilization, 16" (See Special Provisions) (Typ.)

(R)
- 165 #/SYS. QC/QA–HMA, 3, 70, Surface, 9.5 mm
- 275 #/SYS. QC/QA–HMA, 3, 70, Intermediate, 19.0 mm
- Variable Depth QC/QA–HMA, 3, 70, Intermediate, 19.0 mm

(K1)
- 165 #/SYS. QC/QA–HMA, 3, 70, Surface, 9.5 mm
- Variable Depth QC/QA–HMA, 3, 70, Intermediate, 19.0 mm (220 #/SYS. QC/QA–HMA, 3, 70, Intermediate, 19.0 mm minimum)

(J) 165 #/SYS. QC/QA–HMA, 1, 64, Surface, 9.5 mm

(J1) 495 #/SYS. QC/QA–HMA, 1, 64, Intermediate, 19.0 mm

(J2) 6" Compacted Aggregate, No. 53, Base

(J3) Variable Compacted Aggregate, No. 53, Base (3" Min.)

(P2) Asphalt for Tack Coat between all layers of HMA


ASA Engineering Consultants, Inc.
3717 Woodview Trace
Indianapolis, Indiana 46268
(317) 334–1334


ALI SALEEM ABU-ARES REGISTERED No. 87062 STATE OF INDIANA PROFESSIONAL ENGINEER

RECOMMENDED FOR APPROVAL — DESIGN ENGINEER — October 11, 2011 — DATE

DESIGNED AAC | DRAWN JimB

CHECKED ASA | CHECKED AKS

INDIANA DEPARTMENT OF TRANSPORTATION

TYPICAL CROSS–SECTIONS
LINE "PR"

| HORIZONTAL SCALE | BRIDGE FILE |
|---|---|
| As Noted | |
| VERTICAL SCALE | DESIGNATION |
| As Noted | 9467555 |
| SURVEY BOOK | SHEETS |
| | 4 of 59 |
| CONTRACT | PROJECT NO. |
| 24382 | MWP–5000 (00C) |

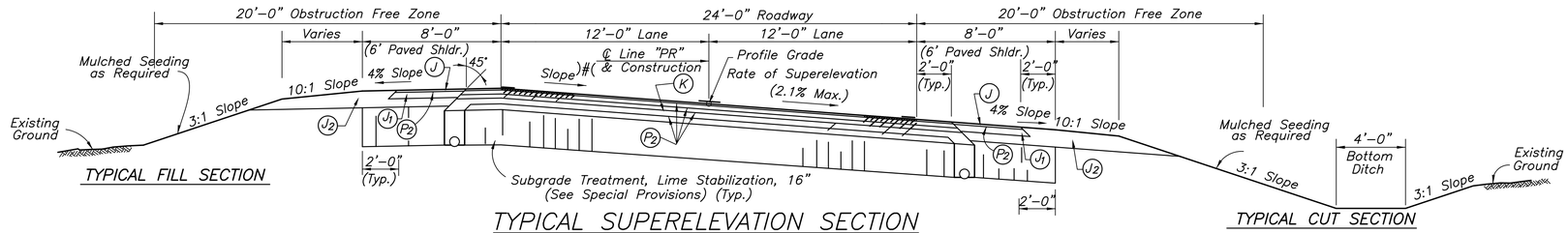


## TYPICAL SUPERELEVATION SECTION

Sta. 211+62 to Sta. 221+51 "PR"

Scale: 1/4" = 1'–0"

(#): Varies –2.1% to +2.1% from Sta. 211+62 to Sta. 213+00 & Sta. 220+49.12 to Sta. 221+51 "PR"

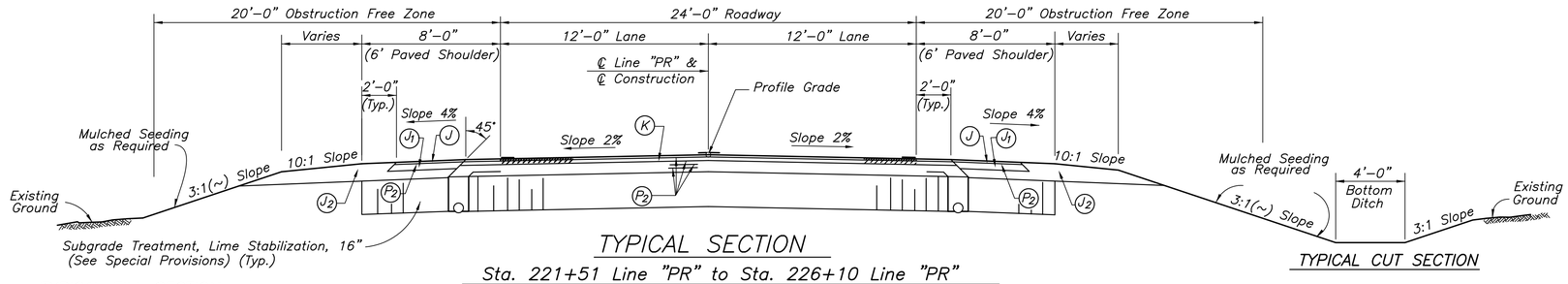


## TYPICAL SECTION

Sta. 221+51 Line "PR" to Sta. 226+10 Line "PR"

Scale: 1/4" = 1'–0"

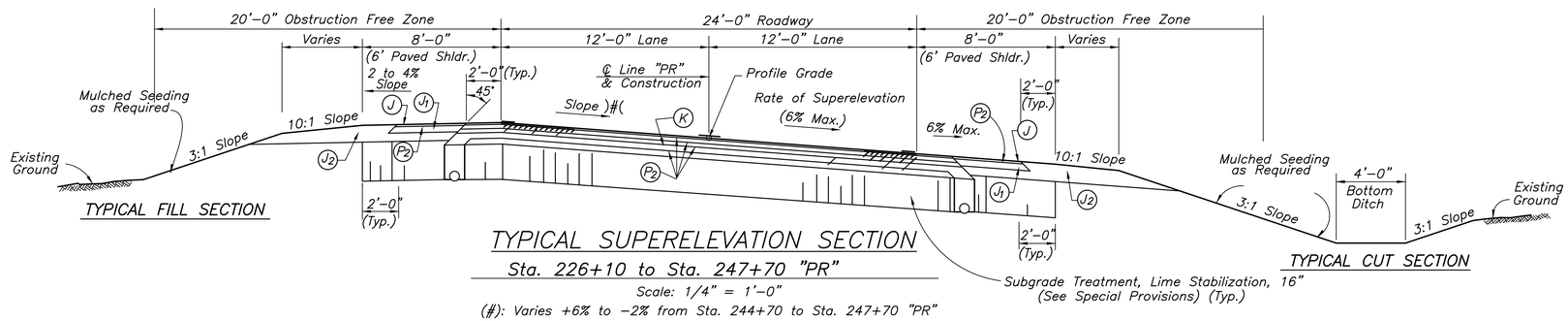


## TYPICAL SUPERELEVATION SECTION

Sta. 226+10 to Sta. 247+70 "PR"

Scale: 1/4" = 1'–0"

(#): Varies +6% to –2% from Sta. 244+70 to Sta. 247+70 "PR"

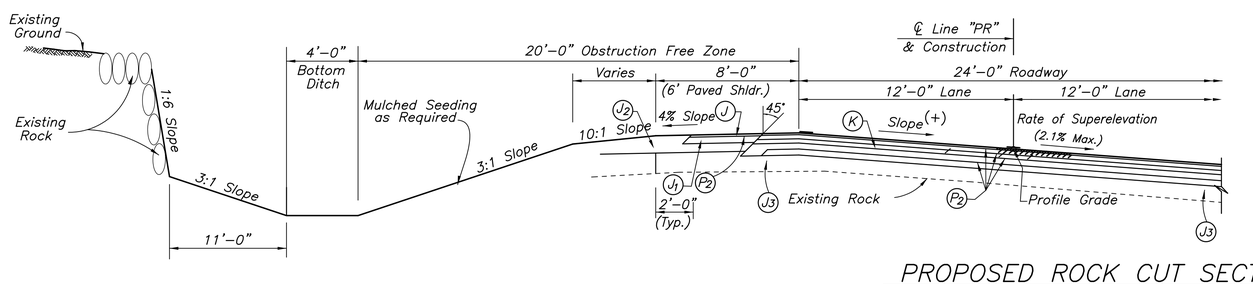


TYPICAL CUT SECTION

## PROPOSED ROCK CUT SECTION
## TYPICAL SUPERELEVATION SECTION

Scale: 1/4" = 1'–0"

### Rock Excavation

These Quantities will be omitted if rock is encounter.

Sta. 211+80 to Sta. 214+05

193.5 Tons of Revetment Riprap

258 Sys. of Geotextiles

Sta. 214+83 to Sta. 216+25

89.4 Sys. of Sodding

### Notes:

See Sheet No. 4 for Legend


ASA Engineering Consultants, Inc.
3717 Woodview Trace
Indianapolis, Indiana 46268
(317) 334–1334


ALI SALEEM ABUFARES REGISTERED No. 870062 STATE OF INDIANA PROFESSIONAL ENGINEER

RECOMMENDED FOR APPROVAL — DESIGN ENGINEER — October 11, 2011 — DATE

DESIGNED AAC | DRAWN JimB

CHECKED ASA | CHECKED ASA

INDIANA DEPARTMENT OF TRANSPORTATION

TYPICAL CROSS–SECTIONS LINE "PR"

| HORIZONTAL SCALE | BRIDGE FILE |
|---|---|
| As Noted | |
| VERTICAL SCALE | DESIGNATION |
| As Noted | 9467555 |
| SURVEY BOOK | SHEETS |
| | 5 of 59 |
| CONTRACT | PROJECT NO. |
| 24382 | MWP–5000 (00C) |

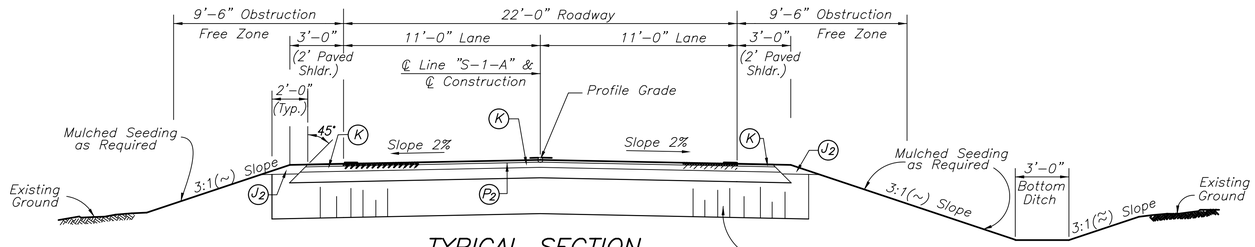


TYPICAL FILL SECTION

TYPICAL SECTION

Sta. 13+00.0 to Sta. 19+36.88 Line "S-1-A"

Sta. 20+75.12 to Sta. 25+00.0 Line "S-1-A"

Scale: 1/4" = 1'-0"

TYPICAL CUT SECTION

(~): Side Slope is 4:1 From Sta. 20+50 to Sta. 22+00, Lt.
(~): Side Slope varies (from 4:1 to 5:1) From Sta. 22+00 to Sta. 22+50, Lt.
(~): Side Slope is 5:1 From Sta. 22+50 to Sta. 25+00, Lt.
(≈): Bk. Side Slope varies (from 3:1 to 2:1) From Sta. 21+50 to Sta. 22+00, Lt.
(≈): Bk. Side Slope is 2:1 From Sta. 22+00 to Sta. 25+00, Lt.

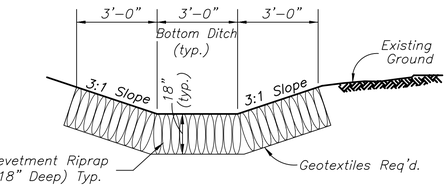


TYPICAL RIPRAP SIDE DITCH

Scale: 3/8" = 1'-0"

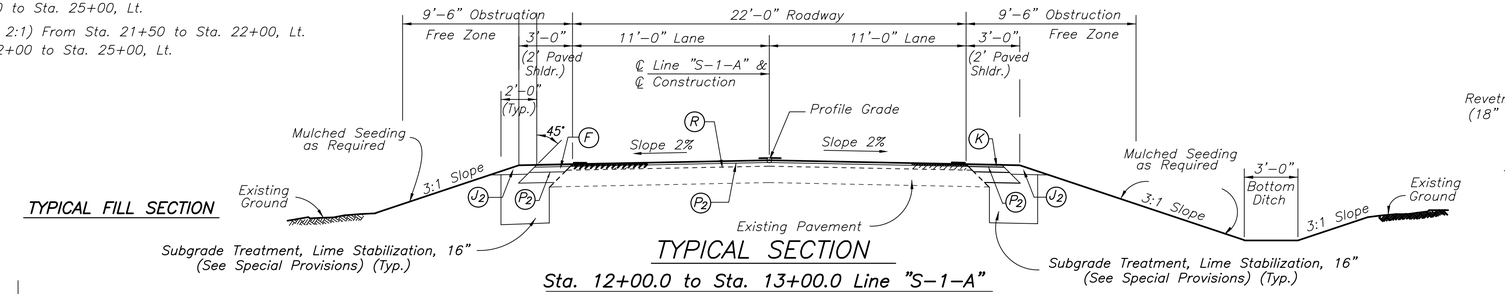


TYPICAL FILL SECTION

TYPICAL SECTION

Sta. 12+00.0 to Sta. 13+00.0 Line "S-1-A"

Sta. 25+00.0 to Sta. 26+00.0 Line "S-1-A"

Scale: 1/4" = 1'-0"

TYPICAL CUT SECTION

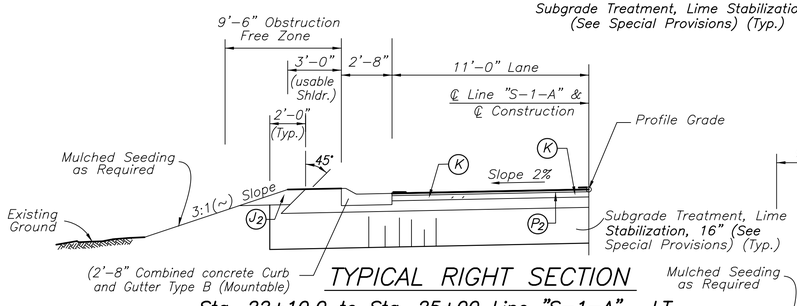


TYPICAL RIGHT SECTION

Sta. 22+10.0 to Sta. 25+00 Line "S-1-A", LT.

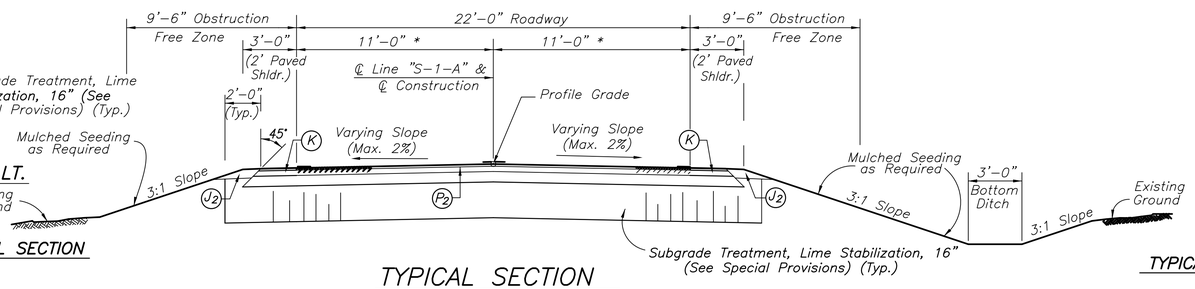


TYPICAL FILL SECTION

TYPICAL SECTION

Sta. 19+36.88 to Sta. 19+82.00 Line "S-1-A", *: Varies to 56'-2"

Sta. 20+30.00 to Sta. 20+75.12 Line "S-1-A", *: Varies from 50'-8"

Scale: 1/4" = 1'-0"

TYPICAL CUT SECTION

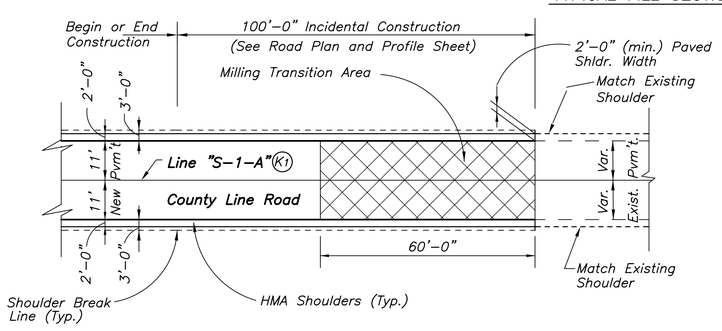


INCIDENTAL CONSTRUCTION DETAIL

Scale: 1" = 20'-0"

## LEGEND

K:
- 165 #/SYS. HMA, Type A, Surface
- 385 #/SYS. HMA, Type A, Intermediate
- 7" Compacted Aggregate, No. 53, Base
- Subgrade Treatment, Lime Stabilization, 16" (See Special Provisions) (Typ.)

R:
- 165 #/SYS. HMA, Type A, Surface
- 275 #/SYS. HMA, Type A, Intermediate
- Variable Depth HMA, Type A, Intermediate

J2: 6" Compacted Aggregate, No. 53, Base

J3: Variable Compacted Aggregate, No. 53, Base (3" Min.)

P2: Asphalt for Tack Coat between all layers of HMA

K1:
- 165 #/SYS HMA, Type A, Surface
- Variable Depth HMA, Type A, Intermediate (220 #/SYS. HMA minimum)


ASA Engineering Consultants, Inc.
3717 Woodview Trace
Indianapolis, Indiana 46268
(317) 334-1334


ALI SALEEM ABU-ARES REGISTERED No. 870062 STATE OF INDIANA PROFESSIONAL ENGINEER

RECOMMENDED FOR APPROVAL — DESIGN ENGINEER — DATE October 11, 2011

DESIGNED AAC | DRAWN JimB

CHECKED ASA | CHECKED AKS

INDIANA DEPARTMENT OF TRANSPORTATION

TYPICAL CROSS-SECTIONS LINE "S-1-A"

| HORIZONTAL SCALE | BRIDGE FILE |
|---|---|
| As Noted | |
| VERTICAL SCALE | DESIGNATION |
| As Noted | 9467555 |
| SURVEY BOOK | SHEETS |
| | 6 of 59 |
| CONTRACT | PROJECT NO. |
| 24382 | MWP-5000 (00C) |

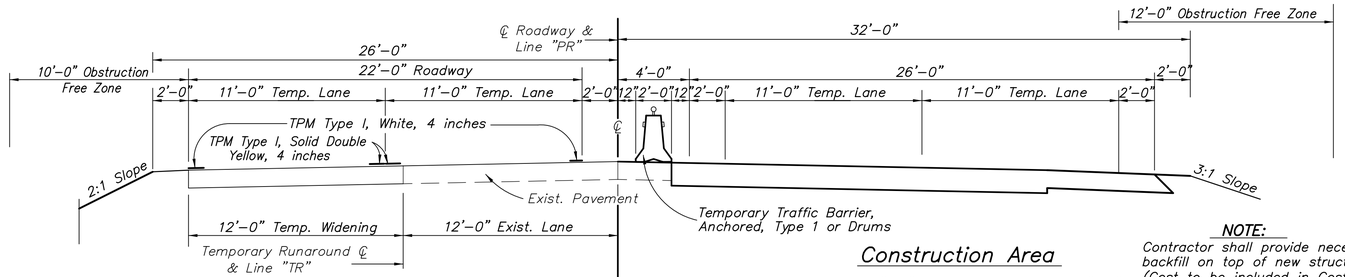


Sta. 10+00.0 "TR" to P.I. Sta. 14+00.92 "TR"
Temporary Runaround

## PHASE I

Scale: 1/4" = 1'-0"

Construction Area

Sta. 199+50.0 "PR" to Sta. 208+06.8 "PR"

## PHASE II

**NOTE:**
Contractor shall provide necessary means to retain structure backfill on top of new structure and along sides of structure walls. (Cost to be included in Cost of Maintenance of Traffic)

| ESTIMATE OF QUANTITIES | | |
|---|---|---|
| ITEM | QUANTITY | UNIT |
| | | |
| Maintaining Traffic | 1 | LSum |
| Construction Sign, A | 20 | Each |
| Construction Sign, B | 16 | Each |
| Construction Sign, C | 6 | Each |
| Standard Barricade Type III-A | 72 | Lft. |
| Standard Barricade Type III-B | 48 | Lft. |
| Road Closure Sign Assembly | 2 | Each |
| Temporary Traffic Barrier, Anchored, Type 2 | 963 | Ft. |
| Temporary Traffic Barrier, Type 2 | *2644 | Ft. |
| Temporary Pavement Marking, 4 inch (White) | 8054 | Ft. |
| Temporary Pavement Marking, 4 inch (Yellow) | 8324 | Ft. |
| Temporary Pavement Marking, Removable, 4 inch (White) | 10,247 | Ft. |
| Temporary Pavement Marking, Removable, 4 inch (Yellow) | 16,672 | Ft. |
| Line Removal | 955 | Ft. |
| Energy Absorbing Terminal CZ | 9 | Each |
| | | |
| | | |

* Includes 850 Lft. of Temp. Traffic Barrier, Type 2 @ vertical drop area. Sta. 215+00 to 220+50

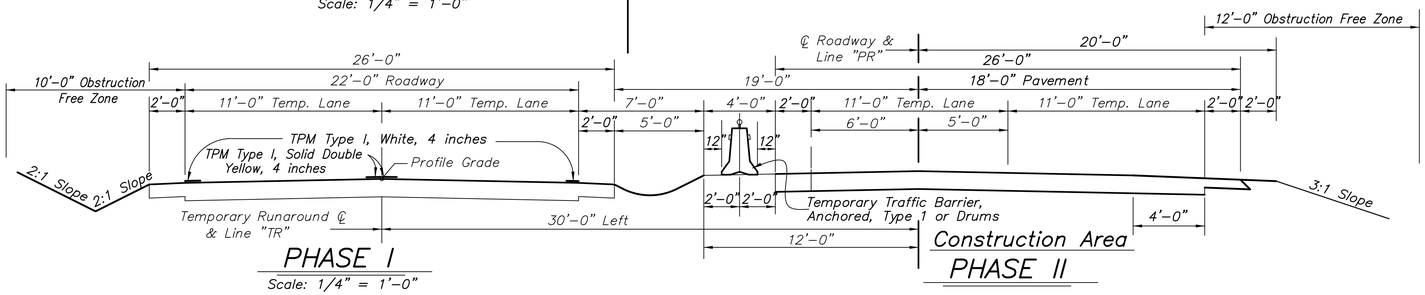


## PHASE I

Scale: 1/4" = 1'-0"

Construction Area

## PHASE II

P.I. Sta. 14+00.92 "TR" to Sta. 29+74.28 "TR" Existing Road
Temporary Runaround

Sta. 208+06.8 "PR" to Sta. 211+62.0 "PR" ~ Sta. 247+70.0 "PR" to Sta. 249+00.0 "PR"
Sta. 211+62.0 "PR" to Sta. 213+18.0 "PR" ~ Sta. 233+82.0 "PR" to Sta. 247+70.0 "PR" w/Superelevation

## LEGEND

1. XG20-2 END CONSTRUCTION – "A"
2. XW20-1 ROAD CONSTRUCTION AHEAD – "A"
3. XW20-2 DETOUR AHEAD – "A"
4. XW1-4-B (R or L) REVERSE CURVE – "A"
5. XW-13-1-A SPEED ADVISORY – "B"
6. R11-2 ROAD CLOSED – "A"
7. XM4-10 (R or L) DETOUR – "B"
8. XW1-6 (R or L) ARROW – "B"
9. XW6-3-B TWO WAY TRAFFIC – "A"
10. R4-1-A DO NOT PASS –"A"

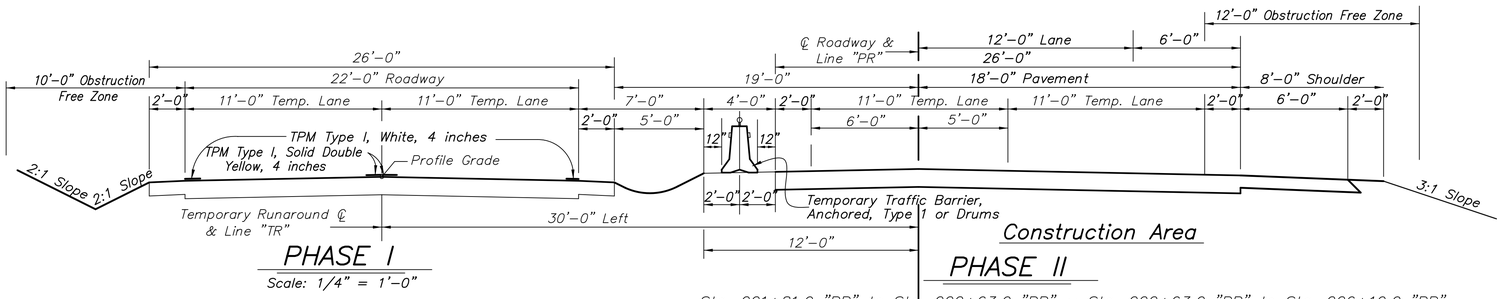


## PHASE I

Scale: 1/4" = 1'-0"

Construction Area

## PHASE II

Existing Road Sta. 40+00.0 "TR" to Sta. 250+12.99 "PR"
w/Superelevation
Temporary Runaround

Sta. 221+81.0 "PR" to Sta. 222+63.0 "PR" ~ Sta. 222+63.0 "PR" to Sta. 226+10.0 "PR"
Sta. 213+18.0 "PR" to Sta. 221+81.0 "PR" ~ Sta. 226+10.0 "PR" to Sta. 231+17.0 "PR" w/Superelevation
Sta. 231+17.0 "PR" to Sta. 233+82.0 "PR" w/Superelevation

**NOTE:**
Construction Zone Design Speed is 45 M.P.H.

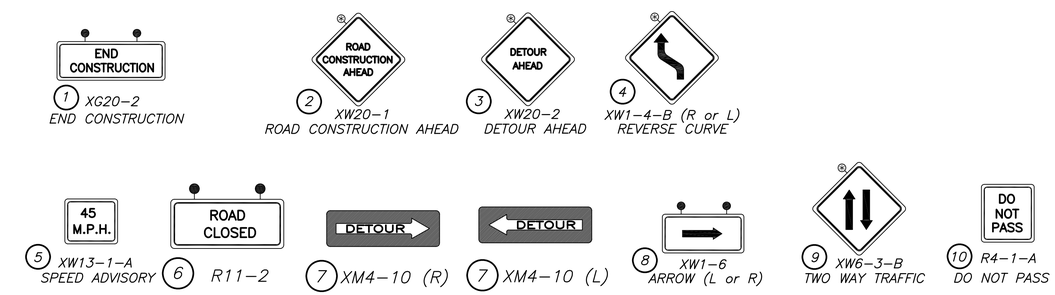


All Type "A" Construction Signs to have Low Intensity Flashing Yellow Light, Type "A"

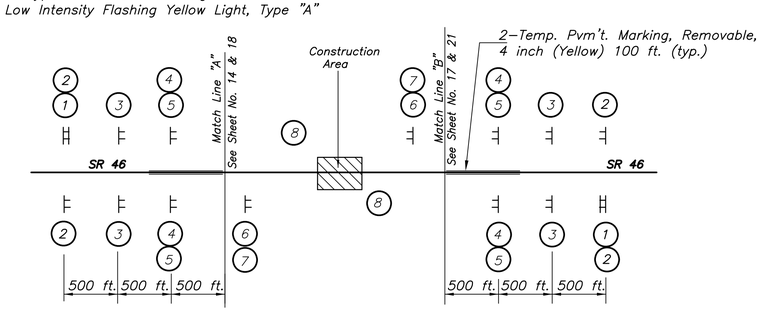


## PLAN – CONSTRUCTION SIGNS

Not To Scale


ASA Engineering Consultants, Inc.
3717 Woodview Trace
Indianapolis, Indiana 46268
(317) 334-1334


ALI SALEEM ABU-ARES REGISTERED No. 870062 STATE OF INDIANA PROFESSIONAL ENGINEER

RECOMMENDED FOR APPROVAL — DESIGN ENGINEER — October 11, 2011 DATE

DESIGNED AAC | DRAWN JimB
CHECKED ASA | CHECKED ASA

INDIANA DEPARTMENT OF TRANSPORTATION

MAINTENANCE OF TRAFFIC

| HORIZONTAL SCALE | BRIDGE FILE |
|---|---|
| 1/4" = 1'-0" | |
| VERTICAL SCALE | DESIGNATION |
| 1/4" = 1'-0" | 9467555 |
| SURVEY BOOK | SHEETS |
| | 7 of 59 |
| CONTRACT | PROJECT NO. |
| 24382 | MWP-5000 (00C) |

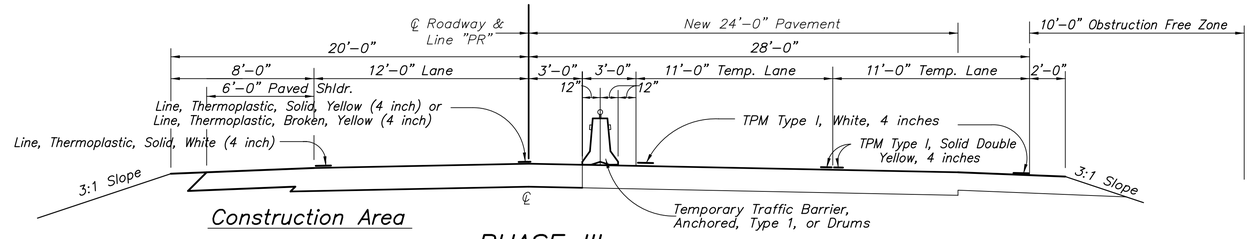


Construction Area

Sta. 199+50.0 "PR" to Sta. 208+06.8 "PR"

PHASE III

Scale: 1/4" = 1'–0"

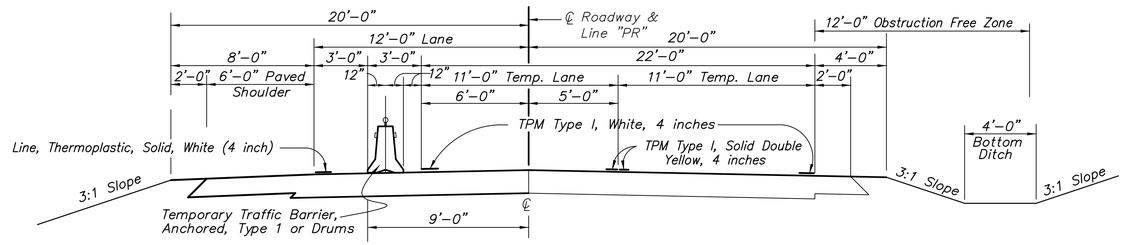


Construction Area

PHASE III

Scale: 1/4" = 1'–0"

Sta. 208+06.8 "PR" to Sta. 211+62.0 "PR" ~ Sta. 231+17.0 "PR" to Sta. 249+00.0 "PR"
Sta. 211+62.0 "PR" to Sta. 221+81.0 "PR" w/Superelevation

**NOTE:**
Contractor shall provide necessary means to retain structure backfill on top of new structure and along sides of structure walls. (Cost to be included in Cost of Maintenance of Traffic)

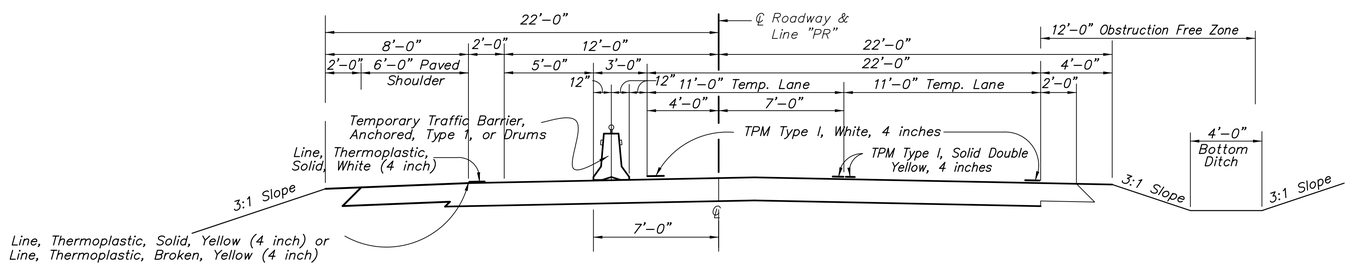


Construction Area

Sta. 226+50.0 "PR" to Sta. 231+17.0 "PR" w/Superelevation

PHASE III

Scale: 1/4" = 1'–0"

Construct full width pavement section:

Sta. 221+50.0 "PR" to Sta. 226+50.0 "PR" (See Typical Cross Sections)


ASA Engineering Consultants, Inc.
3717 Woodview Trace
Indianapolis, Indiana 46268
(317) 334–1334


ALI SALEEM ABUFARES REGISTERED No. 870062 STATE OF INDIANA PROFESSIONAL ENGINEER

RECOMMENDED FOR APPROVAL — DESIGN ENGINEER — October 11, 2011 — DATE

DESIGNED AAC | DRAWN JimB

CHECKED ASA | CHECKED ASA

INDIANA DEPARTMENT OF TRANSPORTATION

MAINTENANCE OF TRAFFIC

| HORIZONTAL SCALE | BRIDGE FILE |
|---|---|
| 1/4" = 1'–0" | |
| VERTICAL SCALE | DESIGNATION |
| 1/4" = 1'–0" | 9467555 |
| SURVEY BOOK | SHEETS |
| | 8 of 59 |
| CONTRACT | PROJECT NO. |
| 24382 | MWP–5000 (00C) |

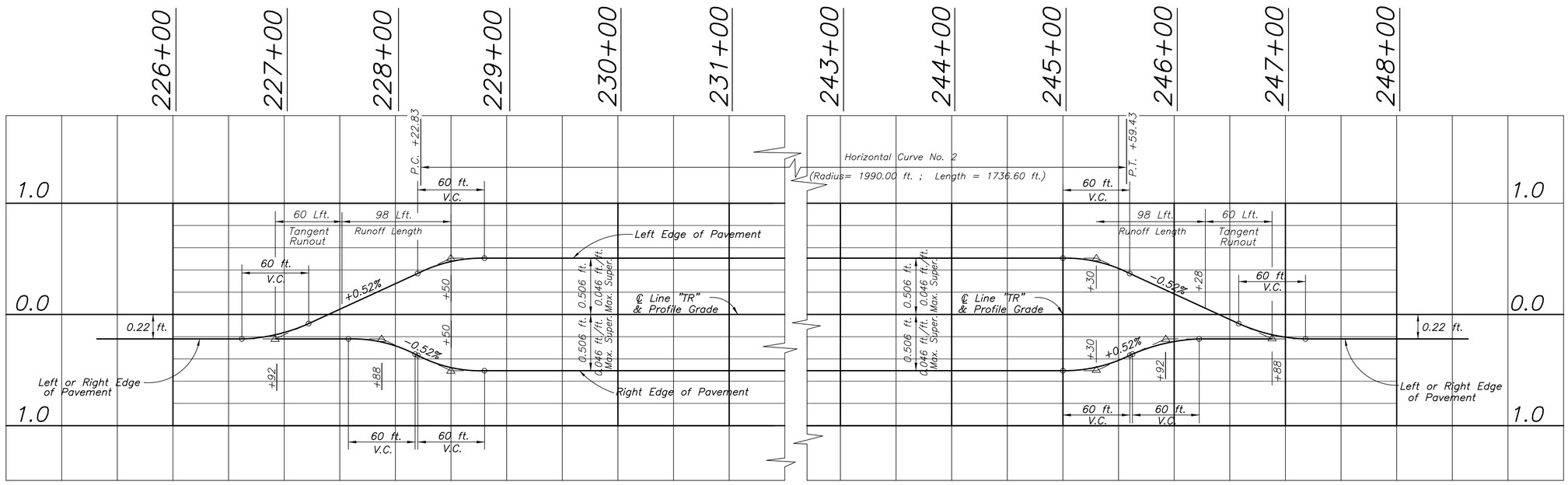


## MAINTENANCE OF TRAFFIC
## SUPERELEVATION TRANSITION DIAGRAMS

Vertical Scale: 6"= 1"

**NOTE:**
Construction Zone Design Speed is 45 M.P.H.


ASA Engineering Consultants, Inc.
3717 Woodview Trace
Indianapolis, Indiana 46268
(317) 334-1334


ALI SALEEM ABUFARES
REGISTERED No. 870062 STATE OF INDIANA
PROFESSIONAL ENGINEER

RECOMMENDED FOR APPROVAL — DESIGN ENGINEER — October 11, 2011 DATE

DESIGNED ASA | DRAWN JimB.
CHECKED ASA | CHECKED AAC

INDIANA
DEPARTMENT OF TRANSPORTATION

MAINTENANCE OF TRAFFIC
SUPERELEVATION TRANSITION
DIAGRAMS

| HORIZONTAL SCALE | BRIDGE FILE |
|---|---|
| 1" = 50'-0" | |
| VERTICAL SCALE | DESIGNATION |
| As Noted | 9467555 |
| SURVEY BOOK | SHEETS |
| | 9 of 59 |
| CONTRACT | PROJECT NO. |
| 24382 | MWP-5000 (00C) |

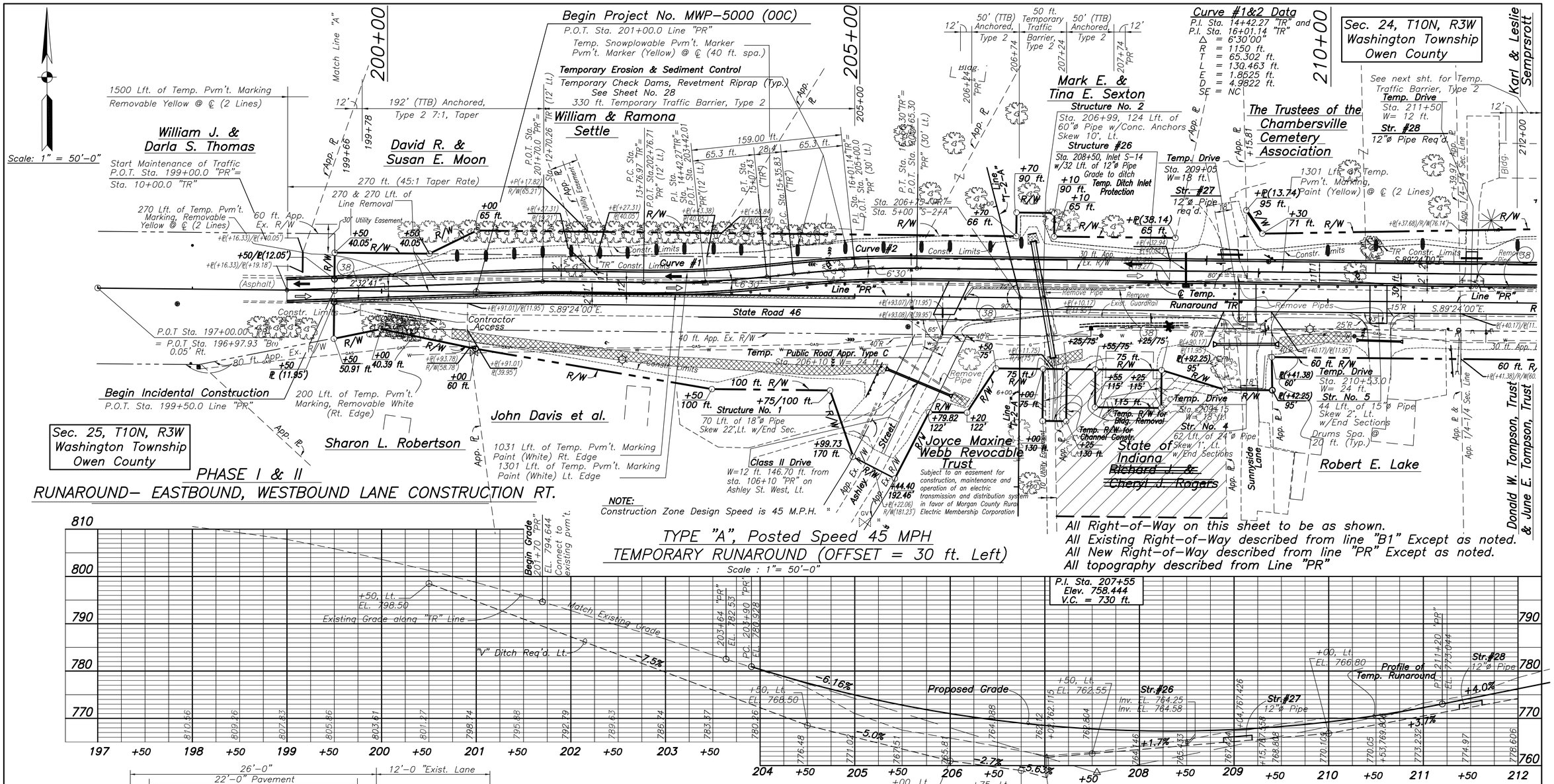


ASA Engineering Consultants, Inc.
3717 Woodview Trace
Indianapolis, Indiana 46268
(317) 334-1334

ALI SALEEM ABUFARES REGISTERED No. 87062 STATE OF INDIANA PROFESSIONAL ENGINEER

RECOMMENDED FOR APPROVAL — DESIGN ENGINEER — DATE 10/11/2011

DESIGNED AAC | DRAWN JimB
CHECKED ASA | CHECKED SSS

INDIANA DEPARTMENT OF TRANSPORTATION

MAINTENANCE OF TRAFFIC
PHASE I & II

| HORIZONTAL SCALE | BRIDGE FILE |
|---|---|
| 1" = 50'-0" | |
| VERTICAL SCALE | DESIGNATION |
| 1" = 10'-0" | 9467555 |
| SURVEY BOOK | SHEETS |
| | 10 of 59 |
| CONTRACT | PROJECT NO. |
| 24382 | MWP-5000 (00C) |

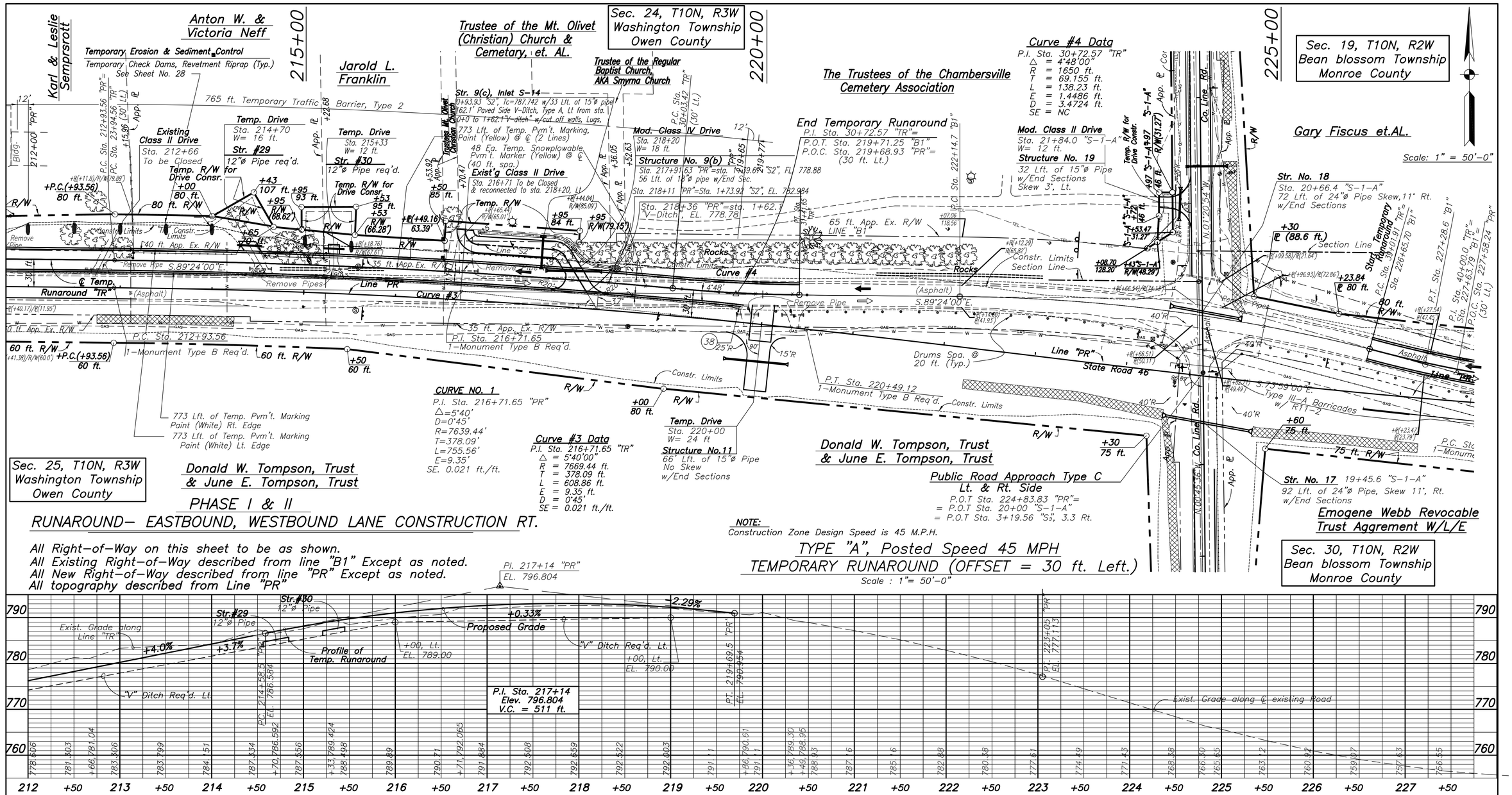


ASA Engineering Consultants, Inc.
3717 Woodview Trace
Indianapolis, Indiana 46268
(317) 334-1334

ALI SALEEM ABUFARES REGISTERED No. 870062 STATE OF INDIANA PROFESSIONAL ENGINEER

RECOMMENDED FOR APPROVAL — DESIGN ENGINEER — DATE 10/11/2011

DESIGNED AAC | DRAWN JimB
CHECKED ASA | CHECKED SSS

INDIANA DEPARTMENT OF TRANSPORTATION

MAINTENANCE OF TRAFFIC PHASE I & II

| HORIZONTAL SCALE | BRIDGE FILE |
|---|---|
| 1" = 50'-0" | |
| VERTICAL SCALE | DESIGNATION |
| 1" = 10'-0" | 9467555 |
| SURVEY BOOK | SHEETS |
| | 11 of 59 |
| CONTRACT | PROJECT NO. |
| 24382 | MWP-5000 (00C) |

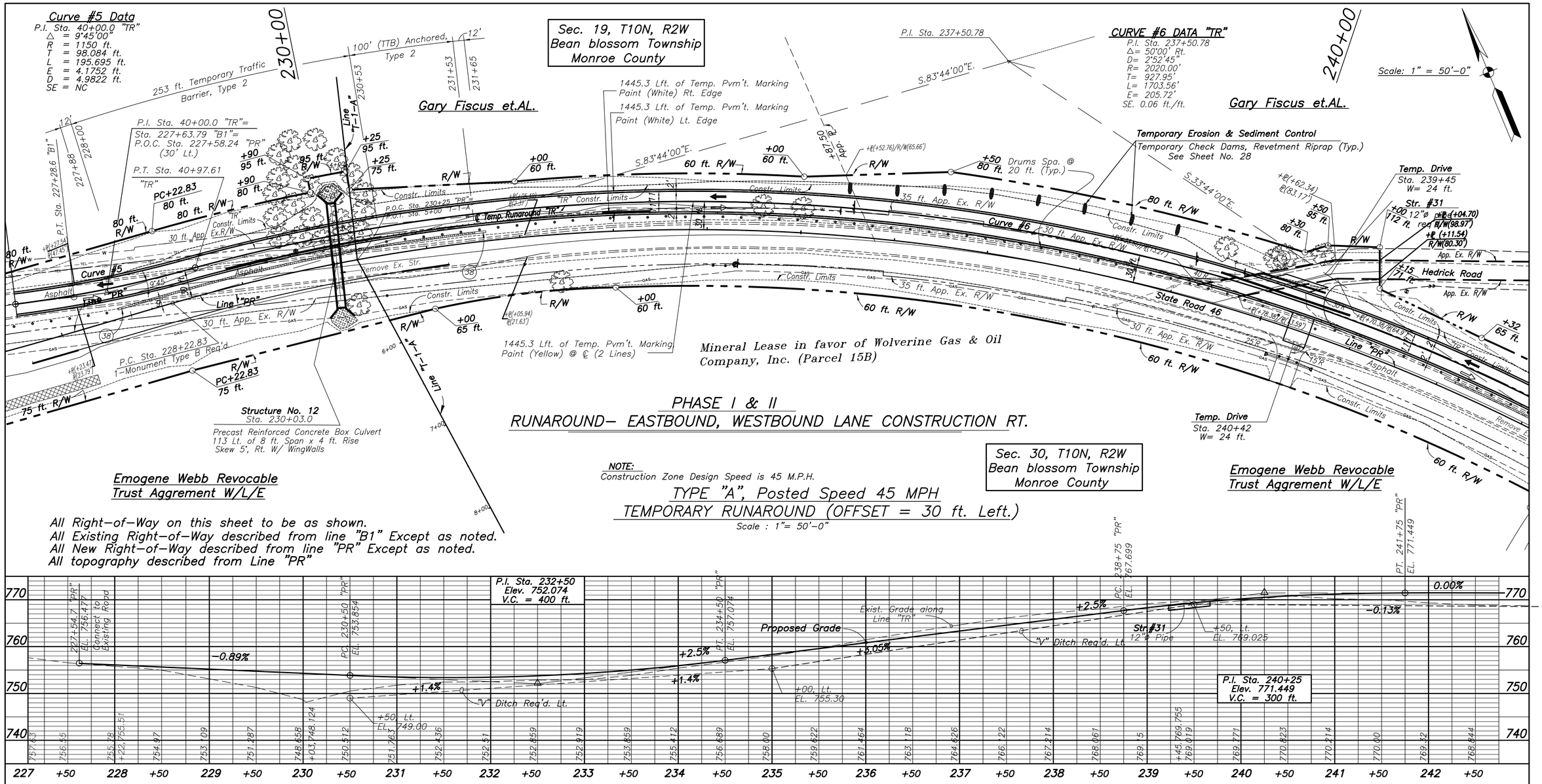


## PHASE I & II
## RUNAROUND– EASTBOUND, WESTBOUND LANE CONSTRUCTION RT.

**NOTE:**
Construction Zone Design Speed is 45 M.P.H.

## TYPE "A", Posted Speed 45 MPH
## TEMPORARY RUNAROUND (OFFSET = 30 ft. Left.)

Scale : 1"= 50'-0"

All Right–of–Way on this sheet to be as shown.
All Existing Right–of–Way described from line "B1" Except as noted.
All New Right–of–Way described from line "PR" Except as noted.
All topography described from Line "PR"

## TEMPORARY RUNAROUND QUANTITIES

| | | |
|---|---|---|
| Temporary Pipe and Approaches | = 1 | LSum |
| 165 #/sys. HMA, Type A, Surface | = 787.7 | Tons |
| 550 #/sys. HMA, Type A, Intermediate | = 2625.5 | Tons |
| 6" Compacted Agregate, No. 53, Base | = 3180.8 | Tons |
| Asphalt Material for Tack Coat | = 2.4 | Tons |
| Subgrade Treatment, Type III A | = 10,305 | Sys. |
| Seed Mixture "T" (Conventional mix) | = 246.5 | Lbs. |
| Mulching Material | = 6.2 | Tons |
| Fertilizer | = 1.2 | Tons |

| | | |
|---|---|---|
| Temporary Pavement Marking, 4 inch (White) | = 8050 | ft. |
| Temporary Pavement Marking, 4 inch (Yellow) | = 8324 | ft. |
| Temp. Pvm't. Marking, Removable, 4 inch (White) | = 10247 | ft. |
| Temp. Pvm't. Marking, Removable, 4 inch, (Yellow) | = 16672 | ft. |
| Temporary Raised Pavement Marker, I | = 102 | Each |
| Type III A Barricade With Signs | = 72 | Lft. |
| Type III B Barricade | = 48 | Lft. |
| Construction Signs, Type "A" | = 20 | Each |
| Construction Signs, Type "B" | = 16 | Each |
| Construction Signs, Type "C" | = 6 | Each |
| Road Closure Sign Assembly | = 2 | Each |
| Delineators Type D–2 | = 136 | Each |

| | | |
|---|---|---|
| Guardrail W–Beam, 6'–3" Spa. for Temporary Pipe and Approaches | = 200 | ft. |
| Temporary Guardrail End Treatment, OS | = 4 | Each |
| Guardrail, W–Beam Nested | = 2 | Each |
| Temporary Erosion & Sediment Control, Check Dam, Revetment Riprap | = 276 | Tons, 2024 Sys. Geotextiles, 40.6 tons of Coarse Aggregate #5 |
| Temporary Erosion & Sediment Control, Straw Bale Ditch Check | = 270 | Lft. |
| Temporary Erosion & Sediment Control, Ditch Inlet Protection | = 1 | Each |
| Line Remove | = 955 | ft. |
| Drums | = 187 | Each |

## LEGEND

- Direction of Traffic
- Removal of Pavement Markings and Snowplowable Raised Pavement Markers
- Temporary Traffic Barrier, Type 2
- (38) Impact Attenuator, ED, W1, TL–2
- Type III–B Barricades as required
- TTB Temporary Traffic Barrier, Type 2
- TTB,A Temporary Traffic Barrier, Anchored, Type 2
- TPM Temporary Pavement Marking
- Drums


ASA Engineering Consultants, Inc.
3717 Woodview Trace
Indianapolis, Indiana 46268
(317) 334–1334


ALI SALEEM ABUFARES REGISTERED No. 870062 STATE OF INDIANA PROFESSIONAL ENGINEER

RECOMMENDED FOR APPROVAL — DESIGN ENGINEER — DATE 10/11/2011

DESIGNED AAC | DRAWN JimB
CHECKED ASA | CHECKED SSS

INDIANA DEPARTMENT OF TRANSPORTATION

MAINTENANCE OF TRAFFIC
PHASE I & II

| HORIZONTAL SCALE | BRIDGE FILE |
|---|---|
| 1" = 50'–0" | |
| VERTICAL SCALE | DESIGNATION |
| 1" = 10'–0" | 9467555 |
| SURVEY BOOK | SHEETS |
| | 12 of 59 |
| CONTRACT | PROJECT NO. |
| 24382 | MWP–5000 (00C) |

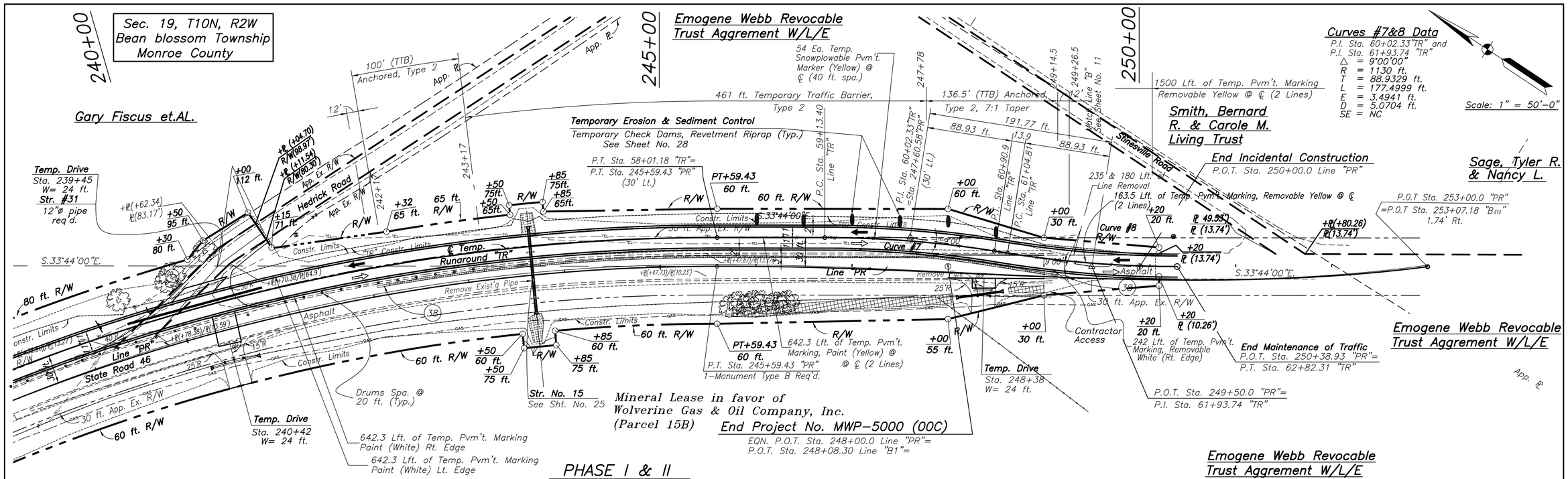


PHASE I & II

RUNAROUND– EASTBOUND, WESTBOUND LANE CONSTRUCTION RT.

TYPE "A", Posted Speed 45 MPH

TEMPORARY RUNAROUND (OFFSET = 30 ft. Left.)

Scale : 1"= 50'-0"

Sec. 30, T10N, R2W
Bean blossom Township
Monroe County

All Right-of-Way on this sheet to be as shown.
All Existing Right-of-Way described from line "B1" Except as noted.
All New Right-of-Way described from line "PR" Except as noted.
All topography described from Line "PR"

NOTE:
Construction Zone Design Speed is 45 M.P.H.

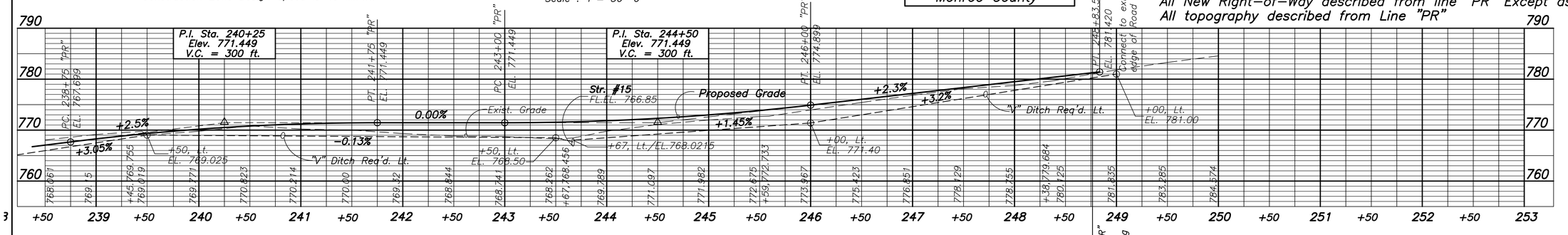


Sta. 248+76.5 "PR"
EL. 781.031
Connect to existing edge of Road

## TEMPORARY RUNAROUND EARTHWORK QUANTITIES

| CONSTRUCTION | | REMOVAL | |
|---|---|---|---|
| CUT | FILL (+20%) | CUT | FILL (+20%) |
| 8060 Cys. | 3525 Cys. | 1160 Cys. | 1405 Cys. |

## Temporary Drives

| | | |
|---|---|---|
| Sta. 206+10 Rt. | 24 ft width | |
| Sta. 209+05 Lt. | 18 ft width | +3.2% |
| Sta. 209+15 Rt. | 18 ft width | |
| Sta. 210+53 Rt. | 24 ft width | |
| Sta. 211+50 Lt. | 12 ft width | +18.4% |
| Sta. 214+70 Lt. | 16 ft width | +8.4% |
| Sta. 215+33 Lt. | 12 ft width | +10% |
| Sta. 220+00 Rt. | 24 ft width | |
| Sta. 239+45 Lt. | 24 ft width | -0.9% |
| Sta. 240+42 Rt. | 24 ft width | |
| Sta. 248+38 Rt. | 24 ft width | |

## LEGEND

- Direction of Traffic
- Removal of Pavement Markings and Snowplowable Raised Pavement Markers
- Temporary Traffic Barrier, Type 2
- (38) Impact Attenuator, ED, W1, TL-2
- Type III-B Barricades as required
- TTB Temporary Traffic Barrier, Type 2
- TTB,A Temporary Traffic Barrier, Anchored, Type 2
- TPM Temporary Pavement Marking
- Drums


ASA Engineering Consultants, Inc.
3717 Woodview Trace
Indianapolis, Indiana 46268
(317) 334-1334


SALEEM ABUFARES REGISTERED No. 870062 STATE OF INDIANA PROFESSIONAL ENGINEER

RECOMMENDED FOR APPROVAL — DESIGN ENGINEER — DATE 10/11/2011

DESIGNED AAC | DRAWN JimB | CHECKED ASA | CHECKED SSS

INDIANA DEPARTMENT OF TRANSPORTATION

MAINTENANCE OF TRAFFIC PHASE I & II

| HORIZONTAL SCALE | BRIDGE FILE |
|---|---|
| 1" = 50'-0" | |
| VERTICAL SCALE | DESIGNATION |
| 1" = 10'-0" | 9467555 |
| SURVEY BOOK | SHEETS |
| | 13 of 59 |
| CONTRACT | PROJECT NO. |
| 24382 | MWP-5000 (00C) |

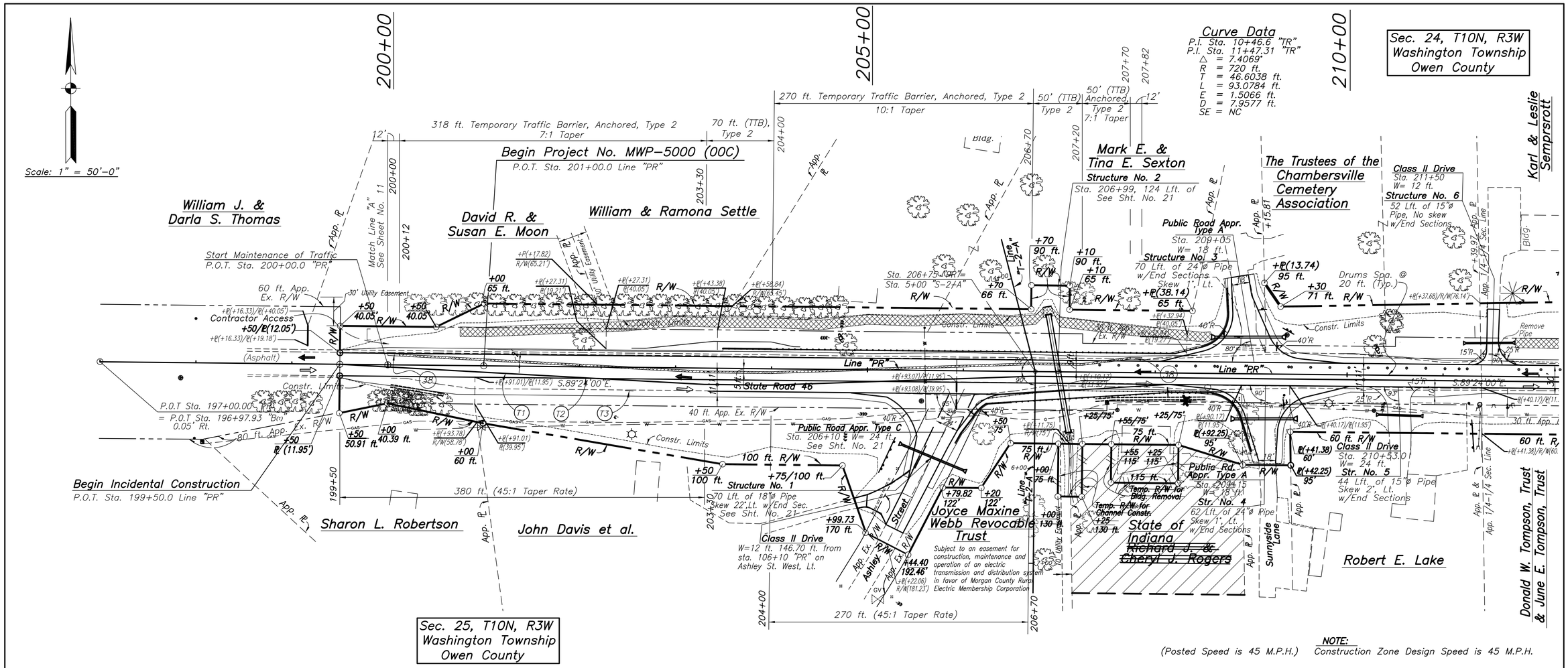


NOTE:
(Posted Speed is 45 M.P.H.) Construction Zone Design Speed is 45 M.P.H.

## PHASE III – EASTBOUND, WESTBOUND LANE CONSTRUCTION LT.

Scale : 1"= 50'-0"

### LEGEND

- Direction of Traffic
- Removal of Pavement Markings and Snowplowable Raised Pavement Markers
- Temporary Traffic Barrier, Type 2
- (38) Impact Attenuator, ED, W1, TL-2
- Type III-B Barricades as required
- TTB Temporary Traffic Barrier, Type 2
- TTB,A Temporary Traffic Barrier, Anchored, Type 2
- TPM Temporary Pavement Marking
- Drums

All Right-of-Way on this sheet to be as shown.
All Existing Right-of-Way described from line "B1" Except as noted.
All New Right-of-Way described from line "PR" Except as noted.
All topography described from Line "PR"


ASA Engineering Consultants, Inc.
3717 Woodview Trace
Indianapolis, Indiana 46268
(317) 334-1334


ALI SALEEM ABUFARES REGISTERED No. 870062 STATE OF INDIANA PROFESSIONAL ENGINEER

RECOMMENDED FOR APPROVAL — DESIGN ENGINEER — DATE 10/11/2011

DESIGNED AAC | DRAWN JimB
CHECKED ASA | CHECKED SSS

INDIANA DEPARTMENT OF TRANSPORTATION

MAINTENANCE OF TRAFFIC PHASE III

| HORIZONTAL SCALE | BRIDGE FILE |
|---|---|
| 1" = 50'-0" | |
| VERTICAL SCALE | DESIGNATION |
| As Noted | 9467555 |
| SURVEY BOOK | SHEETS |
| | 14 of 59 |
| CONTRACT | PROJECT NO. |
| 24382 | MWP-5000 (00C) |

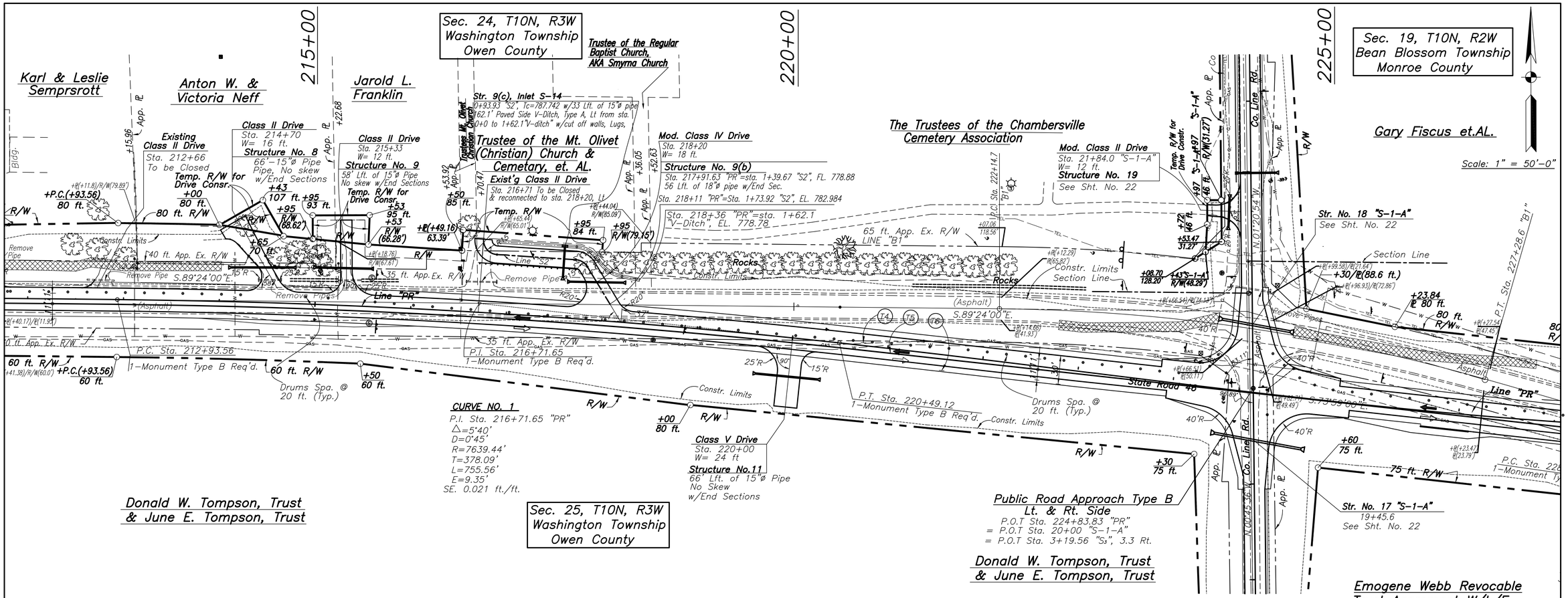


## LEGEND

- Direction of Traffic
- Removal of Pavement Markings and Snowplowable Raised Pavement Markers
- Temporary Traffic Barrier, Type 2
- (38) Impact Attenuator, ED, W1, TL-2
- Type III-B Barricades as required
- TTB Temporary Traffic Barrier, Type 2
- TTB,A Temporary Traffic Barrier, Anchored, Type 2
- TPM Temporary Pavement Marking
- • • Drums

All Right-of-Way on this sheet to be as shown.
All Existing Right-of-Way described from line "B1" Except as noted.
All New Right-of-Way described from line "PR" Except as noted.
All topography described from Line "PR"


ASA Engineering Consultants, Inc.
3717 Woodview Trace
Indianapolis, Indiana 46268
(317) 334-1334


ALI SALEEM ABU-ARES REGISTERED No. 870062 STATE OF INDIANA PROFESSIONAL ENGINEER

RECOMMENDED FOR APPROVAL — DESIGN ENGINEER — DATE 10/11/2011

DESIGNED AAC | DRAWN JimB
CHECKED ASA | CHECKED SSS

INDIANA DEPARTMENT OF TRANSPORTATION

MAINTENANCE OF TRAFFIC PHASE III

| HORIZONTAL SCALE | BRIDGE FILE |
|---|---|
| 1" = 50'-0" | |
| VERTICAL SCALE | DESIGNATION |
| As Noted | 9467555 |
| SURVEY BOOK | SHEETS |
| | 15 of 59 |
| CONTRACT | PROJECT NO. |
| 24382 | MWP-5000 (00C) |

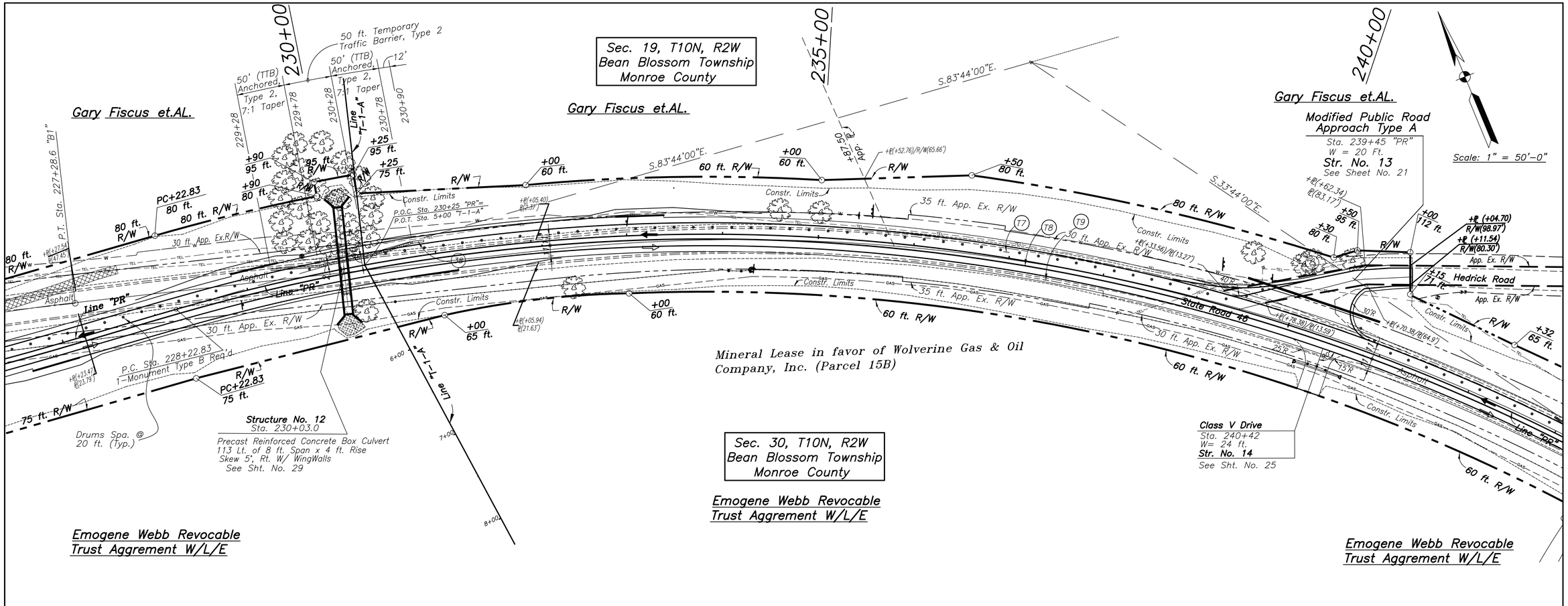


## PHASE III – EASTBOUND, WESTBOUND LANE CONSTRUCTION LT.

Scale : 1"= 50'-0"

(Posted Speed is 45 M.P.H.)

**NOTE:**
Construction Zone Design Speed is 45 M.P.H.

### LEGEND

- Direction of Traffic
- Removal of Pavement Markings and Snowplowable Raised Pavement Markers
- Temporary Traffic Barrier, Type 2
- (38) Impact Attenuator, ED, W1, TL-2
- Type III-B Barricades as required
- TTB Temporary Traffic Barrier, Type 2
- TTB,A Temporary Traffic Barrier, Anchored, Type 2
- TPM Temporary Pavement Marking
- Drums

All Right-of-Way on this sheet to be as shown.
All Existing Right-of-Way described from line "B1" Except as noted.
All New Right-of-Way described from line "PR" Except as noted.
All topography described from Line "PR"


ASA Engineering Consultants, Inc.
3717 Woodview Trace
Indianapolis, Indiana 46268
(317) 334-1334


ALI SALEEM ABU-ARES
REGISTERED No. 870062 STATE OF INDIANA
PROFESSIONAL ENGINEER

RECOMMENDED FOR APPROVAL — DESIGN ENGINEER — DATE 10/11/2011

DESIGNED AAC | DRAWN JimB
CHECKED ASA | CHECKED SSS

INDIANA DEPARTMENT OF TRANSPORTATION

MAINTENANCE OF TRAFFIC
PHASE III

| HORIZONTAL SCALE | BRIDGE FILE |
|---|---|
| 1" = 50'-0" | |
| **VERTICAL SCALE** | **DESIGNATION** |
| As Noted | 9467555 |
| **SURVEY BOOK** | **SHEETS** |
| | 16 of 59 |
| **CONTRACT** | **PROJECT NO.** |
| 24382 | MWP-5000 (00C) |

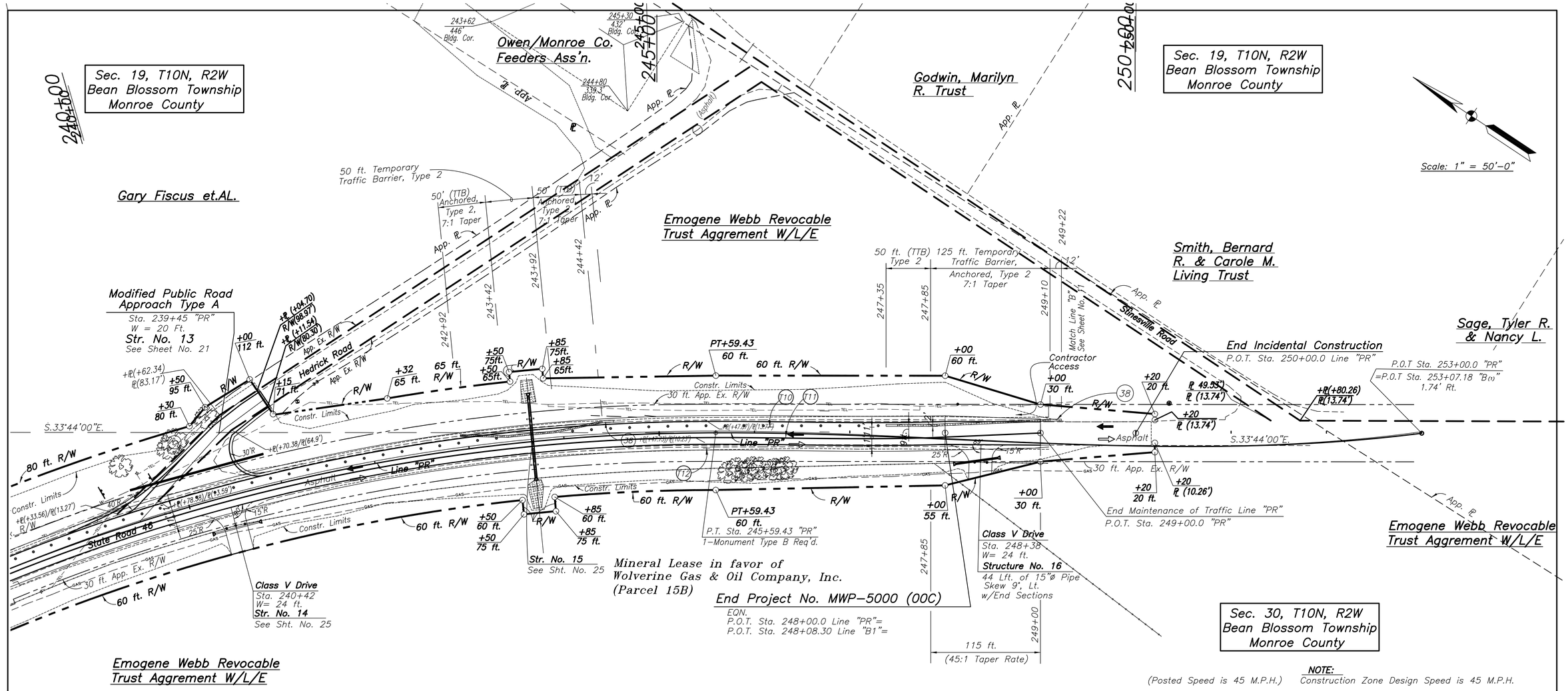


(Posted Speed is 45 M.P.H.)

**NOTE:**
Construction Zone Design Speed is 45 M.P.H.

## PHASE III – EASTBOUND, WESTBOUND LANE CONSTRUCTION LT.

Scale : 1"= 50'-0"

All Right-of-Way on this sheet to be as shown.
All Existing Right-of-Way described from line "B1" Except as noted.
All New Right-of-Way described from line "PR" Except as noted.
All topography described from Line "PR"

| TEMPORARY PAVEMENT MARKING LEGEND | | |
|---|---|---|
| PHASE III | | |
| T1 | TPM, Removable, 4 inch (White) | 1259.5 ft. |
| T2 | TPM, Removable, 4 inch (Yellow) | 2519 ft. |
| T3 | TPM, Removable, 4 inch (White) | 1259.5 ft. |
| T4 | TPM, Removable, 4 inch (White) | 1343 ft. |
| T5 | TPM, Removable, 4 inch (Yellow) | 2686 ft. |
| T6 | TPM, Removable, 4 inch (White) | 1343 ft. |
| T7 | TPM, Removable, 4 inch (White) | 1600 ft. |
| T8 | TPM, Removable, 4 inch (Yellow) | 3200 ft. |
| T9 | TPM, Removable, 4 inch (White) | 1600 ft. |
| T10 | TPM, Removable, 4 inch (White) | 700 ft. |
| T11 | TPM, Removable, 4 inch (Yellow) | 1400 ft. |
| T12 | TPM, Removable, 4 inch (White) | 700 ft. |
| | | |
| | Total Phase III | |
| TPM, Removable, 4 inch (White) | | 9805 ft. |
| TPM, Removable, 4 inch (Yellow) | | 9805 ft. |
| | | |

**NOTES:**

1. Two Lanes of traffic shall be maintained in each direction throughout the length of the project.
2. Replace all pavement markings after construction.

**LEGEND**

- Direction of Traffic
- Removal of Pavement Markings and Snowplowable Raised Pavement Markers
- Temporary Traffic Barrier, Type 2
- (38) Impact Attenuator, ED, W1, TL-2
- Type III-B Barricades as required
- TTB Temporary Traffic Barrier, Type 2
- TTB,A Temporary Traffic Barrier, Anchored, Type 2
- TPM Temporary Pavement Marking
- Drums


ASA Engineering Consultants, Inc.
3717 Woodview Trace
Indianapolis, Indiana 46268
(317) 334-1334


ALI SALEEM ABU-ARIES
REGISTERED No. 870062 STATE OF INDIANA
PROFESSIONAL ENGINEER

RECOMMENDED FOR APPROVAL — DESIGN ENGINEER — DATE 10/11/2011

DESIGNED AAC | DRAWN JimB
CHECKED ASA | CHECKED SSS

INDIANA DEPARTMENT OF TRANSPORTATION

MAINTENANCE OF TRAFFIC
PHASE III

| HORIZONTAL SCALE | BRIDGE FILE |
|---|---|
| 1" = 50'-0" | |
| VERTICAL SCALE | DESIGNATION |
| As Noted | 9467555 |
| SURVEY BOOK | SHEETS |
| | 17 of 59 |
| CONTRACT | PROJECT NO. |
| 24382 | MWP-5000 (00C) |

Sec. 24, T10N, R3W
Washington Township
Owen County

Scale: 1"=50'

| HYDRAULIC DATA | | | | | |
|---|---|---|---|---|---|
| Drainage Area | 0.0625 | Sq. Mi. | Skew | 10°, | Lt. |
| Design Discharge Q–100 | 50.0 | ft³/sec | Scour Depth – (Q–100) | | ft. |
| Velocity – Q–100 | 8.61 | ft/sec | Minimum Low Structure Elev. | 761.8 | ft. |
| Elev. – Q–100 @ Structure | 758.15 | ft. | Existing Backwater | 1.09 | ft. |
| Area Req'd. Below Q100 Elev | 11.0 | Sq.Ft. | Existing Low Structure Elev. | | ft. |
| Area Provided | 11.0 | Sq.Ft. | Exist. Rd. Overflow Waterway Area | 0.0 | Sq.Ft. |
| Freeboard Provided | –.– | ft. | Existing Waterway Opening | | |
| Proposed Backwater | 0.8 | ft. | Below Q100 Elev. | 10.5 | Sq.Ft. |

Begin Incidental Construction
P.O.T. Sta. 199+50.0 Line "PR"

Begin Project No. MWP–5000 (00C)
P.O.T. Sta. 201+00.0 Line "PR"
1–Monument Type B Req'd.

Cross Hatched areas indicate 36.8 Tons of Class 1 Riprap (18" Deep) over 49 sys. of Geotextiles (@ Box Ends)

P.I. Sta. 14+42.27 "TR"= P.O.T. Sta. 203+42.01"PR" (12' Lt.)

Revetment Riprap Ditch (18" Deep) Req'd. Lt.

P.I. Sta. 16+01.14"TR"= P.O.T. Sta. 205+00.0 "PR" (30' Lt.)

Sta. 206+75 "PR"= Sta. 5+00 "S–2–A"

Structure No. 2
Sta. 206+99, 124 Lft. of 60"ø Pipe w/Conc. Anchors
Skew 10°, Lt.

Public Road Appr. Type A
Sta. 209+05
W= 18 ft.
Structure No. 3
70 Lft. of 24"ø Pipe w/End Sections
Skew 1°, Lt.

Class II Drive
Sta. 211+50
W= 12 ft.
Structure No. 6
52 Lft. of 15"ø Pipe, No skew w/End Sections

Class II Drive
Sta. 210+53.0
W= 24 ft.
Str. No. 5
44 Lft. of 15"ø Pipe
Skew 2°, Lt.
w/End Sections

Public Rd. Appr. Type A
Sta. 209+15
W= 18 ft.
Str. No. 4
62 Lft. of 24"ø Pipe
Skew 1°, Lt.
w/End Sections

Structure No. 1
70 Lft. of 18"ø Pipe
Skew 22°, Lt. w/End Sec.

Class II Drive
W=12 ft. 146.70 ft. from sta. 106+10 "PR" on Ashley St. West, Lt.

Public Road Appr. Type C
Sta. 206+10
W= 24 ft.

Begin Incidental Construction
Sta. 199+50
EL. 806.01

150 ft. Incidental Construction

Begin Project
Sta. 201+00
EL. 799.00

PROJECT LIMIT
(Full Depth Pvmt.)

PVC. 203+75
EL. 787.713

P.V.I. Sta. 208+00
EL. 762.25
VC = 970 ft

PVT. 212+85
EL. 777.528
PVC. 212+87
EL. 777.596

Exist. Elev. ("PR") = Exist. PG. ("B1")

Exist. PG. ("B1")

Str.# 1
18"ø pipe
0.91%

Str.# 2

Str.# 3
24"ø pipe

Str.# 4
24"ø pipe

Str.# 5
15"ø pipe

Str.# 6
15"ø pipe

Proposed Grade

Q100 EL. 758.15

LSE EL. 761.8

Transition From "V" Ditch to 4 ft. Bottom Lt.

Transition From "V" Ditch to 4 ft. Bottom Rt.

4 ft. Bott. Ditch Req'd. Lt.

4 ft. Bott. Ditch Req'd. Rt. Plotted 10 ft. Below Datum

Transition from "V" Ditch to 4 ft. Bottom, 15.4 Tons of Revetment Riprap (18" Deep) over 20.6 Sys. of Geotextiles Req'd. Lt.

Transition From Conc. PSD "V" Ditch to 4 ft. Bottom 20.5 Tons of Revetment Riprap (18" Deep) over 41.1 Sys. of Geotextiles Req'd. Rt.

471.6 Tons of Revetment Riprap (18" Deep) over 628.8 Sys. of Geotextiles Req'd. Lt.

387 Tons of Revetment Riprap (18" Deep) over 516 Sys. of Geotextiles Req'd. Rt.

141 Tons of Revet. Riprap (18" Deep) over 188 Sys. of Geotextiles Req'd. Lt.

87.7 Sys. of Sodding @ Ditch Req'd. Rt.

103.2 Tons of Revet. Riprap (18" Deep) 228.2 Sys. of Sodding @ Ditch Req'd. Lt.

137.6 Sys. of Sodding @ Ditch Req'd. Lt.

193.5 Tons of Revet. Riprap (18" Deep) over 258 Sys. of Geotextiles Req'd. Lt.

443.75 ft. of (1) Lt.

225.0 ft. of (1) Rt.

(2) Lt. 499.17

(3) Rt. +95.35 +36.60

(3) Lt. +42.92 +61.12

(3) Rt. +84.17 +02.37

+50 Lt./EL.805.85

+50 Rt./EL.805.77

+00 Lt. EL. 794.00

+00 Rt./EL.793.42

+00 Rt./EL.775.02

+50 Rt. EL.765.57

+25 Rt. EL.763.395

+20 Rt. EL.762.531

+50 Lt. /EL. 765.2

+50 Lt. EL. 762.7

+80 Lt. /EL. 758.80

+95 Lt. /EL. 760.79

+00 Lt. EL. 762.89

+16 Rt./EL.758.764

+50 Rt. EL.760.64

+00 Rt./EL.765.89

+50 Lt. /EL. 765.39

+00 Lt. /EL. 766.14

+00 Lt. /EL. 769.54

+50 Rt. EL.768.935

+50 Rt. EL.772.235

5.25%

7.2%

9.2%

6.3%

2.9%

5%

3%

2%

1.4%

0.5%

1.7%

3.2%

3.6%

2.2%

2.03%

3.5%

1.5%

Sec. 25, T10N, R3W
Washington Township
Owen County

MAILBOX ASSEMBLY, SINGLE, DOUBLE

| From | Lt./Rt. | Single | Double |
|---|---|---|---|
| 209+01 | Rt. | 1 | |
| 211+87 | Rt. | | 1 |
| Totals = | | 1 Ea. | 1 Ea. |

GUARDRAIL LEGEND:
(1) W–Beam GR. @ 6.25 ft. Spa. Req'd.
(2) GR. End Treatment Type "OS" Req'd.
(3) CWB GR. Connector System, Type 2 Req'd.

BENCH MARK DATA
TBM#1; RAILROAD SPIKE, +/– 2' ABOVE GROUND ON POWER POLE 186491 LOCATED ON THE NORTH SIDE OF SR 46 +/– 70' WEST OF THE INTERSECTION WITH SUNNYSIDE LANE. ELEV. = 766.46 FEET
Sta. 208+26.2, 66.1 Lt.

RIGHT–OF–WAY NOTES:
"ALL RIGHT–OF–WAY ON THIS SHEET TO BE AS SHOWN."
~~"ALL EXIST'G RIGHT–OF–WAY DESCRIBED FROM LINE "B1" EXCEPT AS NOTED."~~
"ALL ~~NEW~~ RIGHT–OF–WAY DESCRIBED FROM LINE "PR" EXCEPT AS NOTED."
All topography described from Line "PR"

N=19,971.85 E=17,336.96
CP 14 Sta. 197+84.26
@ 15.77 Rt. "PR"

N=19,947.63 E=18,109.08
CP 28 Sta. 205+56.59
@ 31.89 Rt. "PR"

N=20,016.49 E=18,490.19
CP 27 Sta. 209+36.95
@ 40.96 Lt. "PR"

SALEEM ABUFARES
REGISTERED No. 870062 STATE OF INDIANA
PROFESSIONAL ENGINEER

RECOMMENDED FOR APPROVAL — DESIGN ENGINEER — DATE 10/11/2011

DESIGNED AAC | DRAWN SSS
CHECKED ASA | CHECKED JTK

INDIANA DEPARTMENT OF TRANSPORTATION

ROAD PLAN & PROFILE
LINE "PR"

| HORIZONTAL SCALE | BRIDGE FILE |
|---|---|
| 1" = 50'–0" | |
| VERTICAL SCALE | DESIGNATION |
| 1" = 10'–0" | 9467555 |
| SURVEY BOOK | SHEETS |
| | 18 of 59 |
| CONTRACT | PROJECT NO. |
| 24382 | MWP–5000 (00C) |

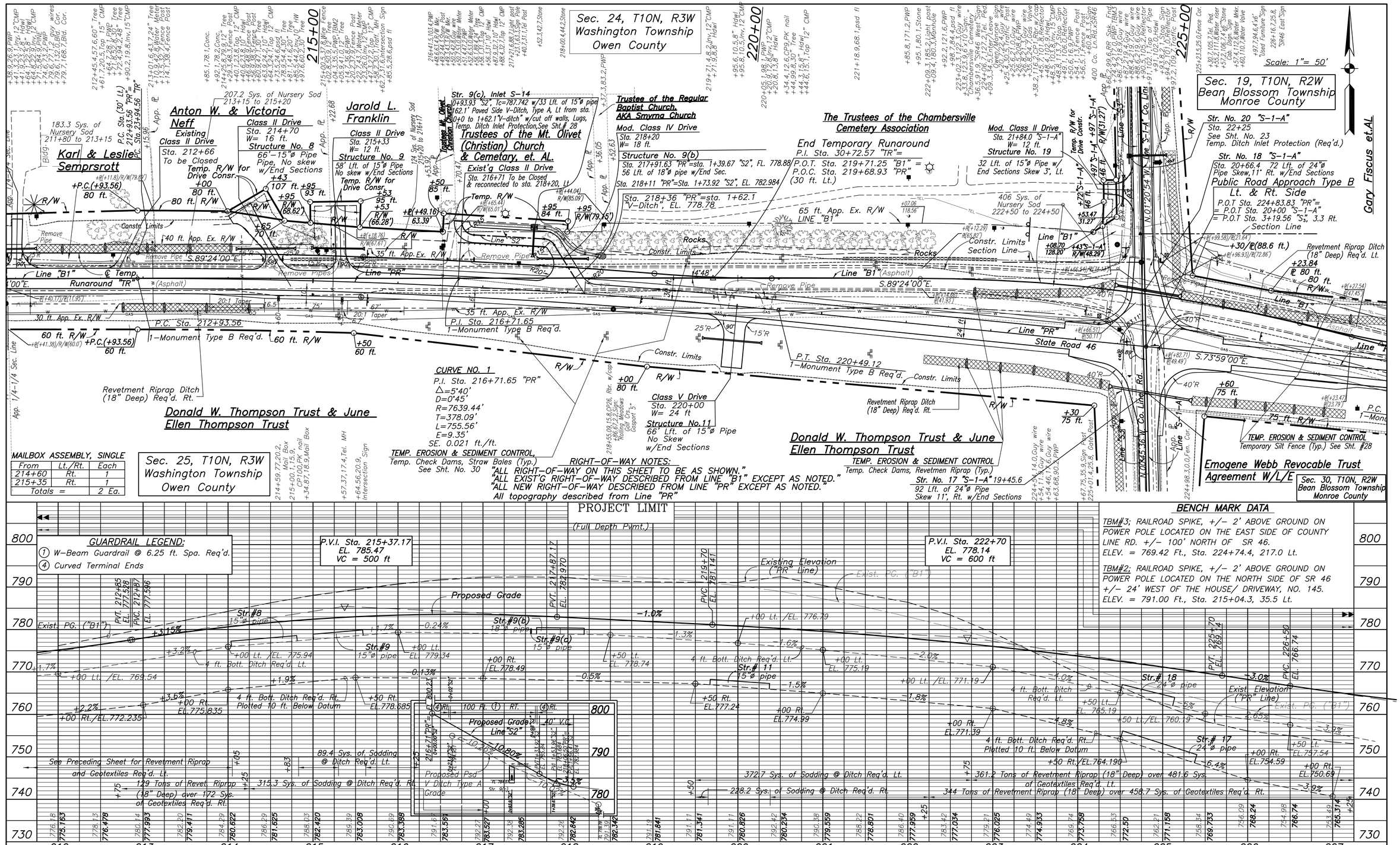


| | |
|---|---|
| RECOMMENDED FOR APPROVAL | DESIGN ENGINEER — DATE 10/11/2011 |
| DESIGNED AAC | DRAWN SSS |
| CHECKED ASA | CHECKED JTK |

ALI SALEEM ABUFARES — REGISTERED No. 87062 STATE OF INDIANA — PROFESSIONAL ENGINEER

# INDIANA DEPARTMENT OF TRANSPORTATION

# ROAD PLAN & PROFILE LINE "PR"

| HORIZONTAL SCALE | BRIDGE FILE |
|---|---|
| 1" = 50'-0" | |
| VERTICAL SCALE | DESIGNATION |
| 1" = 10'-0" | 9467555 |
| SURVEY BOOK | SHEETS |
| | 19 of 59 |
| CONTRACT | PROJECT NO. |
| 24382 | MWP-5000 (00C) |

Sec. 19, T10N, R2W
Bean Blossom Township
Monroe County

Gary Fiscus et.AL

P.I. Sta. 40+00.0 "TR"=
Sta. 227+63.79 "B1"=
P.O.C. Sta. 227+58.24 "PR"
(30' Lt.)

Revetment Riprap Ditch (18" Deep) Req'd. Lt.

Line "B1"

Line "PR"

Line "T-1-A"

Constr. Limits

P.O.C. Sta. 230+25 "PR"
P.O.T. Sta. 5+00 "T-1-A"

30 ft. App. Ex.R/W

30 ft. App. Ex. R/W

35 ft. App. Ex. R/W

60 ft. R/W

80 ft. R/W

75 ft. R/W

P.C. Sta. 228+22.83
1-Monument Type B Req'd.

Revetment Riprap Ditch (18" Deep) Req'd. Rt.

Structure No. 12
Sta. 230+03.0
Precast Reinforced Concrete Box Culvert
113 Lt. of 8 ft. Span x 4 ft. Rise
Skew 5°, Rt. W/ WingWalls

Cross Hatched areas indicate 57.3 Tons of Class 1 Riprap (18" Deep) over 76.3 sys. of Geotextiles (@ Box Ends)

TEMP. EROSION & SEDIMENT CONTROL
Temporary Silt Fence (Typ.)
See Sht. No. 30

TEMP. EROSION & SEDIMENT CONTROL
Temp. Check Dams, Revetment Riprap (Typ.)

Emogene Webb Revocable Trust
Aggrement W/L/E

S.83°44'00"E.

CURVE NO. 2
P.I. Sta. 237+50.78
Δ=50°00' Rt.
D=2°52'45"
R=1990.00'
T=927.95'
L=1736.60'
E=205.72'
SE. 0.06 ft./ft.

P.I. Sta. 237+50.78
1-Monument Type C Req'd.

S.33°44'00"E.

Mineral Lease in favor of Wolverine Gas & Oil Company, Inc. (Parcel 15B)

TEMP. EROSION & SEDIMENT CONTROL,
Temp. Check Dams, Straw Bales (Typ.)
See Sht. No. 30

Emogene Webb Revocable Trust
Aggrement W/L/E

Sec. 30, T10N, R2W
Bean Blossom Township
Monroe County

Modified Public Rd. Approach, Type A
Sta. 239+45 "PR"
W= 20 ft

Structure No. 13
144', 15" ø pipe
Skew 58°, Lt.
℄(+62.34) w/ End Sections
℄(83.17')

State Road 46

Hedrick Road

App. Ex. R/W

Class V Drive
Sta. 240+42
W= 24 ft.

Structure No. 14
48 Lft. of 15"ø Pipe
No skew, w/End Sections

Scale: 1"=50'

## HYDRAULIC DATA (STRUCTURE NO. 12)

| | | | |
|---|---|---|---|
| Drainage Area | 0.0867 Sq. Mile | Skew | 5°, Rt. |
| Design Discharge Q-100 | 90.0 $ft^3$/sec | Scour Depth – (Q-100) | ft. |
| Velocity – Q-100 | 8.48 ft/sec | Minimum Low Structure Elev. | 748.786 ft. |
| Elev. – Q-100 @ Structure | 747.22 ft. | Existing Backwater | 2.57 ft. |
| Area Req'd. Below Q100 Elev. | 19.44 Sq.ft. | Existing Low Structure Elev. | ft. |
| Area Provided | 19.44 Sq.ft. | Exist. Rd. Overflow Waterway Area | 0.0 Sq.ft. |
| Freeboard Provided | 1.57 ft. | Existing Waterway Opening | |
| Proposed Backwater | 0.92 ft. | Below Q100 Elev. | Sq.ft. |

## RIGHT-OF-WAY NOTES:

"ALL RIGHT-OF-WAY ON THIS SHEET TO BE AS SHOWN."
"ALL EXIST'G RIGHT-OF-WAY DESCRIBED FROM LINE "B1" EXCEPT AS NOTED."
"ALL ~~NEW~~ RIGHT-OF-WAY DESCRIBED FROM LINE "PR" EXCEPT AS NOTED."
All topography described from Line "PR"

PROJECT LIMIT
(Full Depth Pavement)

P.V.I. Sta. 230+50
EL. 754.74
VC = 800 ft

P.V.I. Sta. 240+00
EL. 771.36
VC = 600 ft

Proposed Grade

Exist. PG. ("B1")

Exist. Elev. ("PR")

Q100 EL. 747.22

Low Str. EL.748.786

Str. # 12 Sta. 230+03

1:4 Slope (Typ.)

FL 744.786

Str. Backfill Req'd. (Typ.)
1'-6" (Typ.)

4 ft. Bott. Ditch Req'd. Rt.
Plotted 10 ft. Below Datum

See Preceding Sht. for Revet. Riprap and Geotextiles Req'd. Lt.

See Preceding Sht. for Revet. Riprap & Geotextiles Req'd. Rt.

278.6 Sys. of Sodding @ Ditch Req'd. Lt.

298.1 Sys. of Sodding @ Ditch Req'd. Rt.

796.3 Sys. of Sodding @ Ditch Req'd. Lt.

917.3 Sys. of Sodding @ Ditch Req'd. Rt.

Str. #13
15" pipe

Str. #14
15" pipe

## BENCH MARK DATA

TBM#5; RAILROAD SPIKE, +/- 2' ABOVE GROUND ON POWER POLE PSK 60A S888 53 LOCATED +/- 120' EAST OF THE INTERSECTION OF THE FIRST ROAD & SR 46 EAST OF COUNTY LINE ROAD.
ELEV. = 775.61 Ft., Sta. 241+34.9, 83.5 Lt.

TBM#4; RAILROAD SPIKE, +/- 2' ABOVE GROUND ON FENCE POST OF THE GATE LOCATED ON THE SOUTH SIDE OF SR 46 EAST OF COUNTY LINE RD. UNDER THE CHURCH OF NAZARENE SIGN. EL. = 756.21 Ft., Sta. 234+30.7, 36.6 Lt.

## GUARDRAIL LEGEND:

1. W-Beam Guardrail @ 6.25 ft. Spa. Req'd.
2. Guardrail End Treatment Type "OS" Req'd.
3. Guardrail, W-Beam, Nested (100 ft) Req'd.

N=19,843.32 E=20,511.64
REBAR W/CAP CONC. H. W.
SIGN
CP 25 Sta. 229+62.75
@21.71 Lt. "PR"

N=19,737.24 E=20,731.94
PK NAIL FENCE TREE
CP 31 Sta. 232+02.53
@ 29.07 Rt. "PR"

ALI SALEEM ABU-ARAFEH
REGISTERED No. 870062 STATE OF INDIANA
PROFESSIONAL ENGINEER

RECOMMENDED FOR APPROVAL — DESIGN ENGINEER — DATE 10/11/2011

DESIGNED AAC | DRAWN SSS
CHECKED ASA | CHECKED JTK

INDIANA DEPARTMENT OF TRANSPORTATION

ROAD PLAN & PROFILE
LINE "PR"

| HORIZONTAL SCALE | BRIDGE FILE |
|---|---|
| 1" = 50'-0" | |
| VERTICAL SCALE | DESIGNATION |
| 1" = 10'-0" | 9467555 |
| SURVEY BOOK | SHEETS |
| | 20 of 59 |
| CONTRACT | PROJECT NO. |
| 24382 | MWP-5000 (00C) |

Sec. 19, T10N, R2W
Bean Blossom Township
Monroe County

CURVE NO. 2
P.I. Sta. 237+50.78
Δ =50°00' Rt.
D=2°52'45"
R=1990.00'
T=927.95'
L=1736.60'
E=205.72'
SE. 0.06 ft./ft.

Modified Public Rd. Approach, Type A
Sta. 239+45 "PR"
W= 20 ft
Structure No. 13
144', 15" ø pipe
Skew 58°, Lt.
w/ End Sections

TEMP. EROSION & SEDIMENT CONTROL
Temporary Silt Fence (Typ.)
See Sht. No. 30

Gary Fiscus et.AL

Emogene Webb Revocable Trust
Aggrement W/L/E

Hedrick Road

State Road 46

Asphalt

Remove Exist'g Pipe

Constr. Limits

30 ft. App. Ex. R/W

60 ft. R/W

80 ft. R/W

Line "PR"

Line "B1"

P.I. Sta. 237+50.78

S.33°44'00"E.

P.T. Sta. 58+01.18 "TR"=
P.T. Sta. 245+59.43 "PR"
(30' Lt.)

PT+59.43
60 ft.

P.I. Sta. 60+02.33 "TR"
=Sta. 247+60.58 "PR"
(30' Lt.)

End Project No. MWP-5000 (00C)
P.O.T. Sta. 248+00.0 Line "PR"
1-Monument Type B Req'd.

TEMP. EROSION & SEDIMENT CONTROL
Temporary Silt Fence (Typ.)
See Sht. No. 30

End Incidental Construction
P.O.T. Sta. 250+00.0 Line "PR"
O.P.O.T. Sta. 250+05.45, 1.74' Rt. Line "B1"

Scale: 1"=50'

Stinesville Road

Smith, Bernard R. & Carole M. Living Trust

Line "PR"="B1"

End Maintenance of Traffic
P.O.T. Sta. 250+38.93 "PR"=
P.T. Sta. 62+82.31 "TR"

P.O.T. Sta. 249+50.0 "PR"=
P.I. Sta. 61+93.74 "TR"

Revetment Riprap Ditch (18" Deep) Req'd. Rt.

Cross Hatched areas indicates 58.9 Tons of Class 2 Riprap (18" Deep) over 78.6 sys. of Geotextiles (@ Pipe Ends)

Mineral Lease in favor of Wolverine Gas & Oil Company, Inc. (Parcel 15B)

Class V Drive
Sta. 240+42
W= 24 ft.
Structure No. 14
48 Lft. of 15"ø Pipe
No skew, w/End Sections

Structure No. 15
Sta. 243+67
86 Lft. of 24"ø Pipe
w/2 End Sections, No Skew

TEMP. EROSION & SEDIMENT CONTROL
Temp. Check Dams, Straw Bales (Typ.)
See Sht. No. 30

TEMP. EROSION & SEDIMENT CONTROL
Temp. Check Dams, Revetment Riprap (Typ.)

Class V Drive
Sta. 248+38
W= 24 ft.
Structure No. 16
44 Lft. of 15"ø Pipe
Skew 9°, Lt.
w/End Sections

Sec. 30, T10N, R2W
Bean Blossom Township
Monroe County

RIGHT-OF-WAY NOTES:
"ALL RIGHT-OF-WAY ON THIS SHEET TO BE AS SHOWN."
"ALL EXIST'G RIGHT-OF-WAY DESCRIBED FROM LINE "B1" EXCEPT AS NOTED."
"ALL NEW RIGHT-OF-WAY DESCRIBED FROM LINE "PR" EXCEPT AS NOTED."
All topography described from Line "PR"

PROJECT LIMIT
(Full Depth Pvmt.)

P.V.I. Sta. 240+00
EL. 771.36
VC = 600 ft

P.V.I. Sta. 245+00
EL. 771.36
VC = 400 ft

200 ft. Incidental Construction

Exist. Elev. ("PR")

Exist. PG. ("B1")

Proposed Grade

Str.#13 15"ø pipe

Str.#14 15"ø pipe

Str.# 15 Sta. +67

24"ø pipe

End Str.#15 24"ø pipe

Str.#16 15"ø pipe

Transition From 4 ft. Bottom to "V" Ditch

4 ft. Bott. Ditch Req'd. Lt.

4 ft. Bott. Ditch Req'd. Rt. Plotted 10 ft. Below Datum

Transition from 4 ft. Bott. to "V" Ditch 15.4 Tons of Revet. Riptap (18" Deep) over 20.6 Sys. of Geotextiles Req'd. Rt.

See Preceding Sht. for Sodding @ Ditches Req'd. Rt.

69.9 Sys. of Sodding @ Ditch Req'd. Lt.

114.7 Sys. of Sodding @ Ditch Req'd. Rt.

229.3 Sys. of Sodding @ Ditch Req'd. Rt.

475.9 Sys. of Sodding @ Ditch Req'd. Lt.

206.4 Tons of Revetment Riprap (18" Deep) over 275.2 Sys. of Geotextiles Req'd. Rt.

BENCH MARK DATA
TBM#5; RAILROAD SPIKE, +/- 2' ABOVE GROUND ON POWER POLE PSK 60A S888 53 LOCATED +/- 120' EAST OF THE INTERSECTION OF THE FIRST ROAD & SR 46 EAST OF COUNTY LINE ROAD.
ELEV. = 775.61 Ft., Sta. 241+34.9, 83.5 Lt.
TBM#4; RAILROAD SPIKE, +/- 2' ABOVE GROUND ON FENCE POST OF THE GATE LOCATED ON THE SOUTH SIDE OF SR 46 EAST OF COUNTY LINE RD. UNDER THE CHURCH OF NAZARENE SIGN. EL. = 756.21 Ft., Sta. 234+30.7, 36.6 Lt.

N=18,590.98 E=22,097.18
REBAR W/CAP
Line "PR"
CP 8 Sta. 250+35.01
@ 31.31 Lt. "PR"

ALI SALEEM ABU-ARQUB
REGISTERED No. 870062 STATE OF INDIANA
PROFESSIONAL ENGINEER

RECOMMENDED FOR APPROVAL — DESIGN ENGINEER — DATE 10/11/2011

DESIGNED AAC | DRAWN SSS
CHECKED ASA | CHECKED JTK

INDIANA DEPARTMENT OF TRANSPORTATION

ROAD PLAN & PROFILE
LINE "PR"

| HORIZONTAL SCALE | BRIDGE FILE |
|---|---|
| 1" = 50'-0" | |
| VERTICAL SCALE | DESIGNATION |
| 1" = 10'-0" | 9467555 |
| SURVEY BOOK | SHEETS |
| | 21 of 59 |
| CONTRACT | PROJECT NO. |
| 24382 | MWP-5000 (00C) |

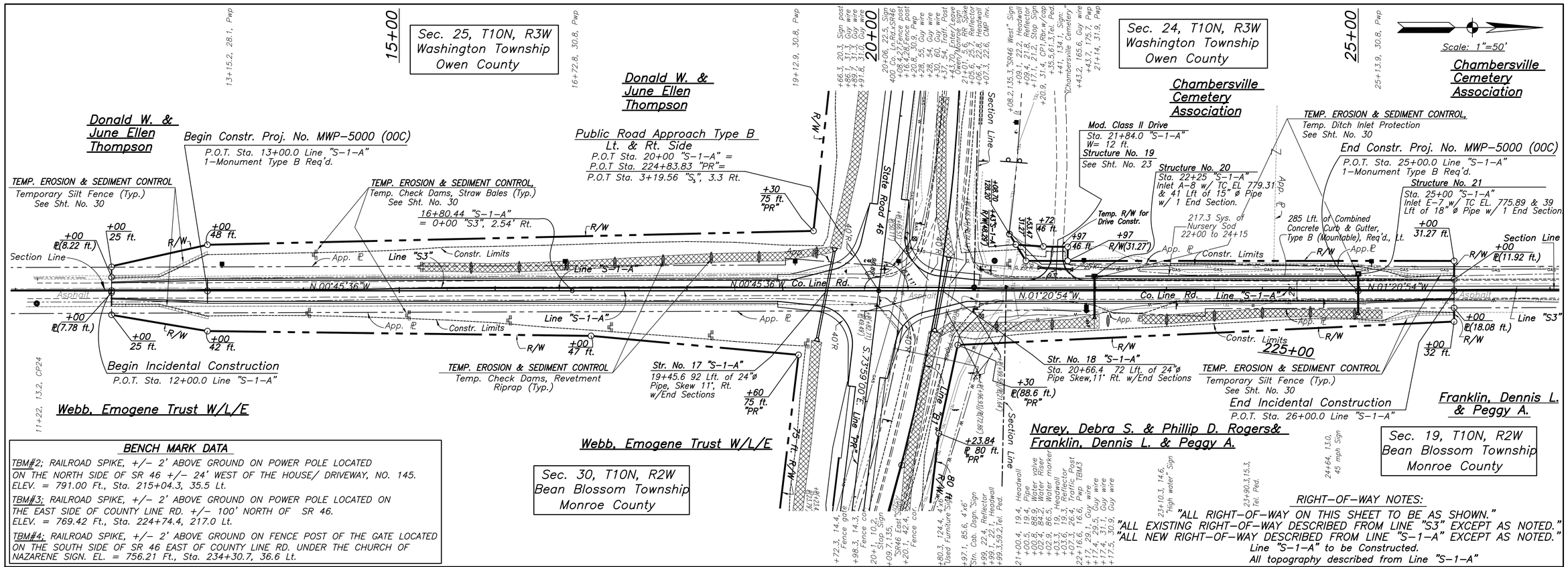


## BENCH MARK DATA

TBM#2; RAILROAD SPIKE, +/- 2' ABOVE GROUND ON POWER POLE LOCATED ON THE NORTH SIDE OF SR 46 +/- 24' WEST OF THE HOUSE/ DRIVEWAY, NO. 145. ELEV. = 791.00 Ft., Sta. 215+04.3, 35.5 Lt.

TBM#3; RAILROAD SPIKE, +/- 2' ABOVE GROUND ON POWER POLE LOCATED ON THE EAST SIDE OF COUNTY LINE RD. +/- 100' NORTH OF SR 46. ELEV. = 769.42 Ft., Sta. 224+74.4, 217.0 Lt.

TBM#4; RAILROAD SPIKE, +/- 2' ABOVE GROUND ON FENCE POST OF THE GATE LOCATED ON THE SOUTH SIDE OF SR 46 EAST OF COUNTY LINE RD. UNDER THE CHURCH OF NAZARENE SIGN. EL. = 756.21 Ft., Sta. 234+30.7, 36.6 Lt.

## RIGHT-OF-WAY NOTES:

"ALL RIGHT-OF-WAY ON THIS SHEET TO BE AS SHOWN."
"ALL EXISTING RIGHT-OF-WAY DESCRIBED FROM LINE "S3" EXCEPT AS NOTED."
"ALL NEW RIGHT-OF-WAY DESCRIBED FROM LINE "S-1-A" EXCEPT AS NOTED."
Line "S-1-A" to be Constructed.
All topography described from Line "S-1-A"

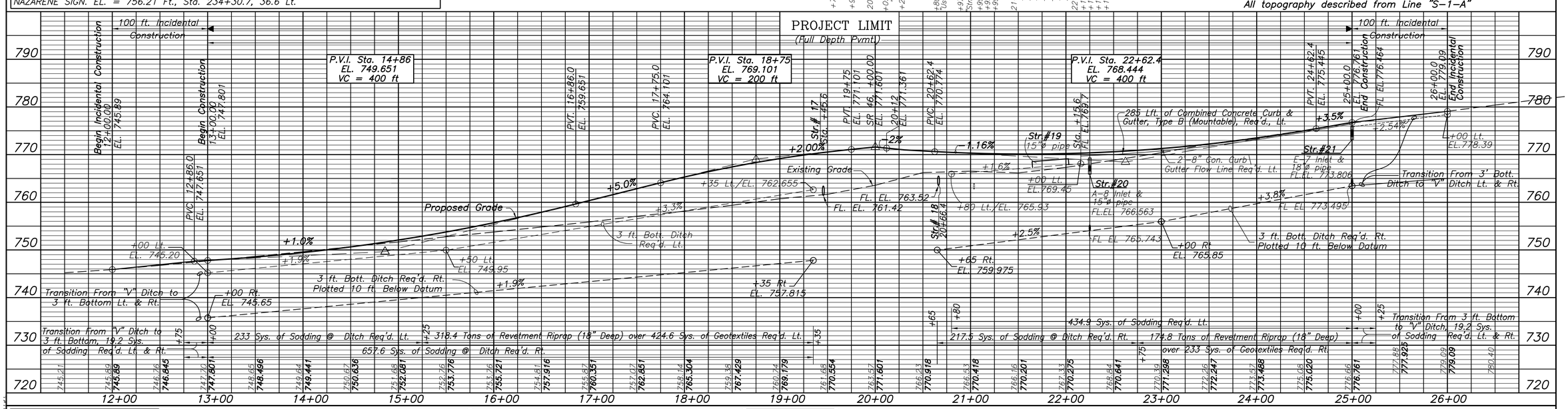


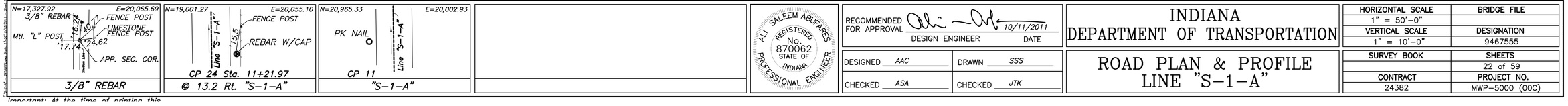


ALI SALEEM ABU-FARES
REGISTERED No. 870062 STATE OF INDIANA
PROFESSIONAL ENGINEER

RECOMMENDED FOR APPROVAL — DESIGN ENGINEER — DATE 10/11/2011

DESIGNED AAC | DRAWN SSS
CHECKED ASA | CHECKED JTK

# INDIANA DEPARTMENT OF TRANSPORTATION

# ROAD PLAN & PROFILE LINE "S-1-A"

| HORIZONTAL SCALE | BRIDGE FILE |
|---|---|
| 1" = 50'-0" | |
| VERTICAL SCALE | DESIGNATION |
| 1" = 10'-0" | 9467555 |
| SURVEY BOOK | SHEETS |
| | 22 of 59 |
| CONTRACT | PROJECT NO. |
| 24382 | MWP-5000 (00C) |

Important: At the time of printing this

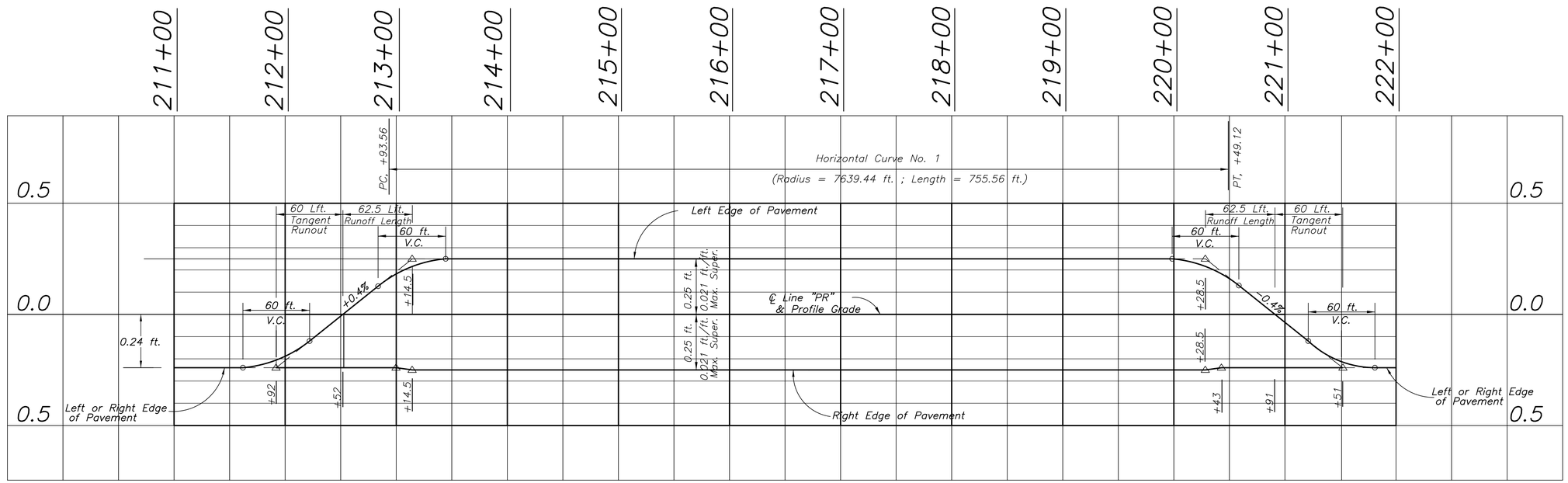


## SUPERELEVATION TRANSITION DIAGRAMS

VERTICAL SCALE: 3"= 1"

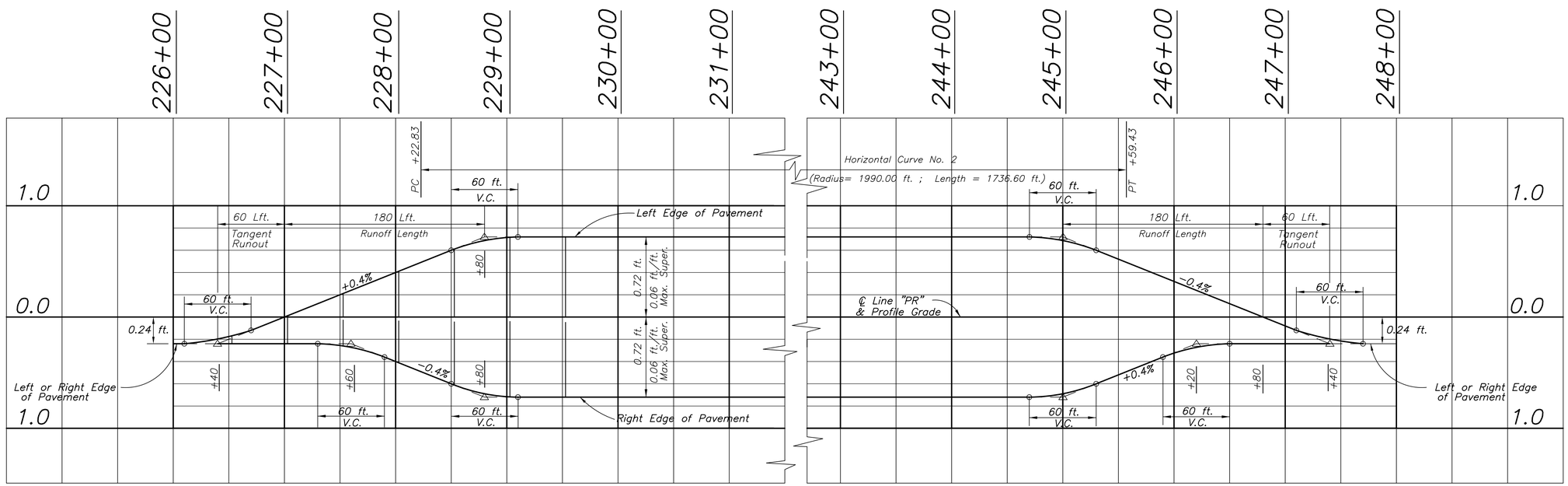


## SUPERELEVATION TRANSITION DIAGRAMS

VERTICAL SCALE: 6"= 1"


ASA Engineering Consultants, Inc.
3717 Woodview Trace
Indianapolis, Indiana 46268
(317) 334-1334


ALI SALEEM ABUFARES
REGISTERED No. 870062 STATE OF INDIANA
PROFESSIONAL ENGINEER

RECOMMENDED FOR APPROVAL — DESIGN ENGINEER — October 11, 2011 — DATE

DESIGNED ASA | DRAWN AKS
CHECKED ASA | CHECKED AAC

INDIANA DEPARTMENT OF TRANSPORTATION

SUPERELEVATION TRANSITION DIAGRAMS

| HORIZONTAL SCALE | BRIDGE FILE |
|---|---|
| 1" = 50'-0" | |
| VERTICAL SCALE | DESIGNATION |
| As Noted | 9467555 |
| SURVEY BOOK | SHEETS |
| | 23 of 59 |
| CONTRACT | PROJECT NO. |
| 24382 | MWP-5000 (00C) |

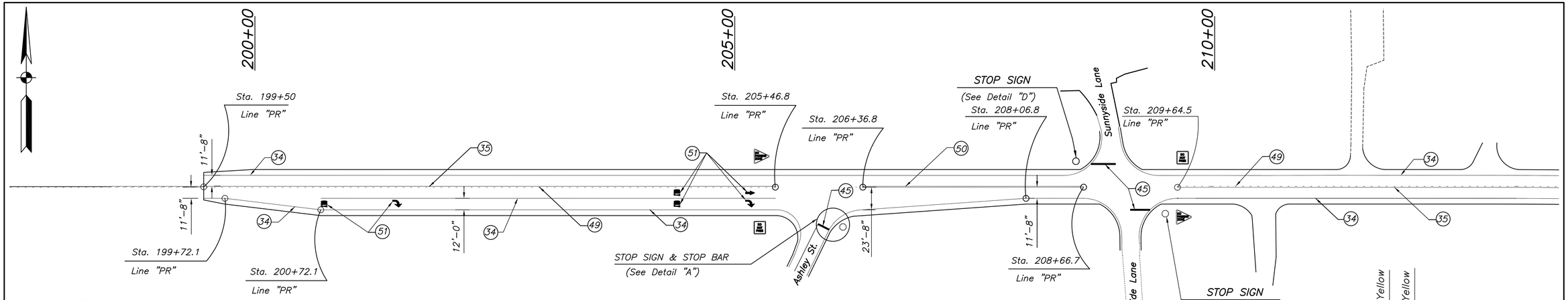


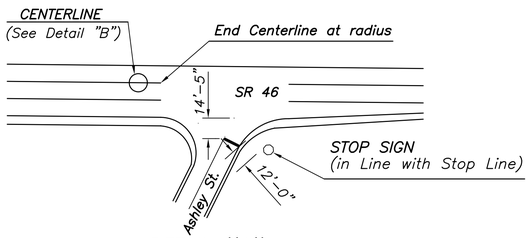


DETAIL "A"

PAVEMENT MARKING AND SIGN DETAIL AT ASHLEY DRIVE INTERSECTING SR46
(Not to Scale)
Note: Pavement Marking and Sign Locations to be field-approved by Engineer

| THERMOPLASTIC LINE MARKING LEGEND | |
|---|---|
| DESCRIPTION | |
| 33 | Snowplowable Raised Pavement Markers |
| 45 | 24 inch White Stop Line, Thermoplastic |
| 34 | 4 inch Solid White Paint Line |
| 35 | 4 inch Solid Yellow Paint Line |
| 49 | 4 inch Broken Yellow Paint Line |
| 50 | 4 inch Solid Double Yellow Paint Line |
| 51 | Pavement Message Markings, White Thermoplastic, Lane Indication Arrow |

Note – SIGN LOCATION SHALL BE APPROVED BY TRAFFIC ENGINEER
Note – MODIFIED SIGNS SHALL BE APPROVED BY THE TRAFFIC ENGINEER.
CONTRACTOR TO PROVIDE SHOP DRAWING.

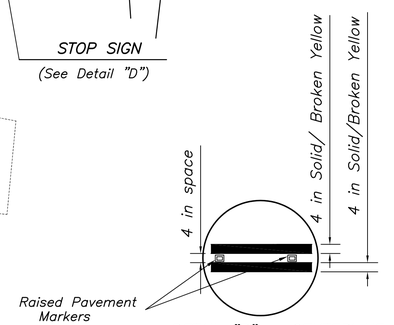


DETAIL "B" – CENTERLINE
(Not to Scale)

| DELINEATORS AT HORIZONTAL CURVE | | | |
|---|---|---|---|
| From Sta. | To Sta. | Position | Spacing (ft.) |
| 212+00 | 221+50 | * North and **South side of SR 46 | 260 |
| 227+00 | 247+00 | * North and **South side of SR 46 | 130 |

* 2 to 6 ft. outside roadway edge
** 2 to 6 ft. outside shoulder edge

| RAISED PAVEMENT MARKER | | | | |
|---|---|---|---|---|
| From Sta. | To Sta. | Position | Spacing (ft.) | Each |
| 199+50 | 205+46.8 | Center Line | 40 | 16 |
| 206+36.8 | 208+66.7 | Center Line | 40 | 7 |
| 209+64.5 | 224+21.5 | Center Line | 40 | 37 |
| 225+46.8 | 239+30 | Center Line | 40 | 35 |
| 240+94 | 250+00 | Center Line | 40 | 23 |

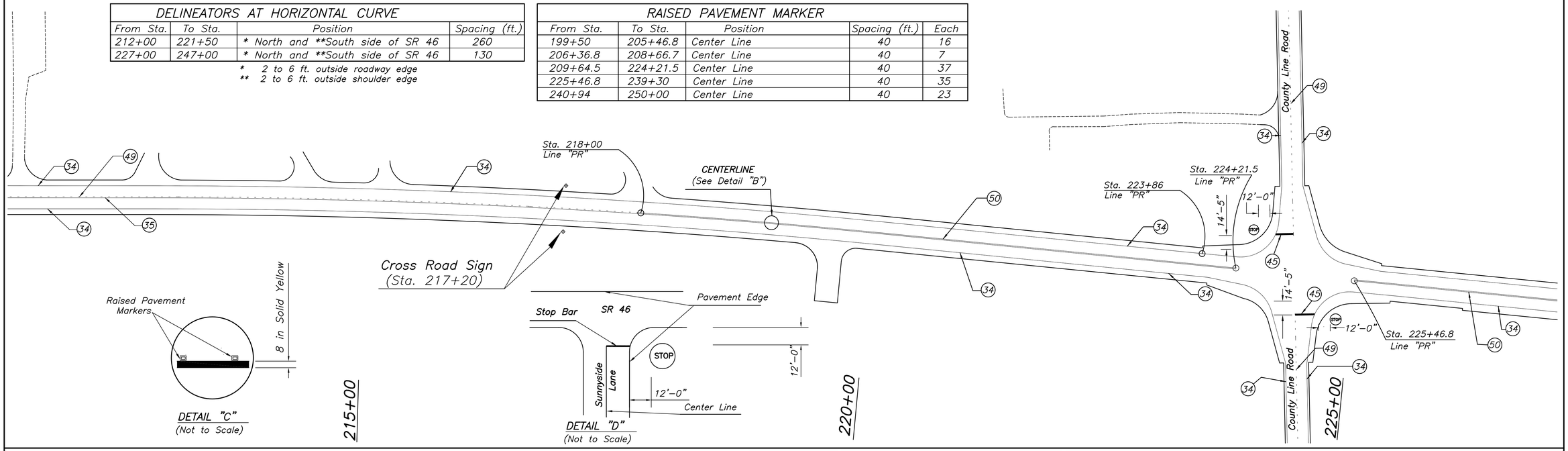


DETAIL "C"
(Not to Scale)

DETAIL "D"
(Not to Scale)


ASA Engineering Consultants, Inc.
3717 Woodview Trace
Indianapolis, Indiana 46268
(317) 334-1334


ALI SALEEM ABU-FARES
REGISTERED No. 870062 STATE OF INDIANA
PROFESSIONAL ENGINEER

RECOMMENDED FOR APPROVAL — DESIGN ENGINEER — October 11, 2011 — DATE

DESIGNED SSS | DRAWN JimB
CHECKED ASA | CHECKED AAC

INDIANA DEPARTMENT OF TRANSPORTATION

PAVEMENT MARKING

| HORIZONTAL SCALE | BRIDGE FILE |
|---|---|
| 1" = 50'-0" | |
| VERTICAL SCALE | DESIGNATION |
| As Noted | 9467555 |
| SURVEY BOOK | SHEETS |
| | 24 of 59 |
| CONTRACT | PROJECT NO. |
| 24382 | MWP-5000 (00C) |

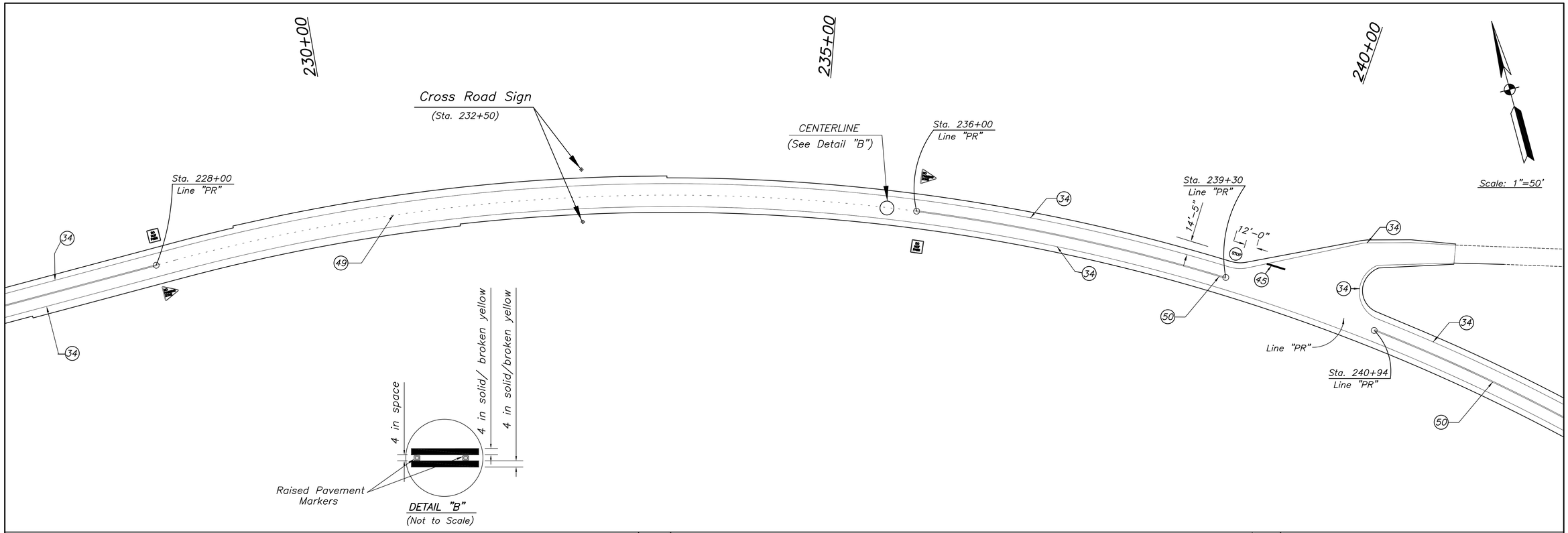


| DELINEATORS AT HORIZONTAL CURVE | | | |
|---|---|---|---|
| From Sta. | To Sta. | Position | Spacing (ft.) |
| 212+00 | 221+50 | *North and **South side of SR 46 | 260 |
| 227+00 | 247+00 | *North and **South side of SR 46 | 130 |

* 2 to 6 ft. outside roadway edge
** 2 to 6 ft. outside shoulder edge

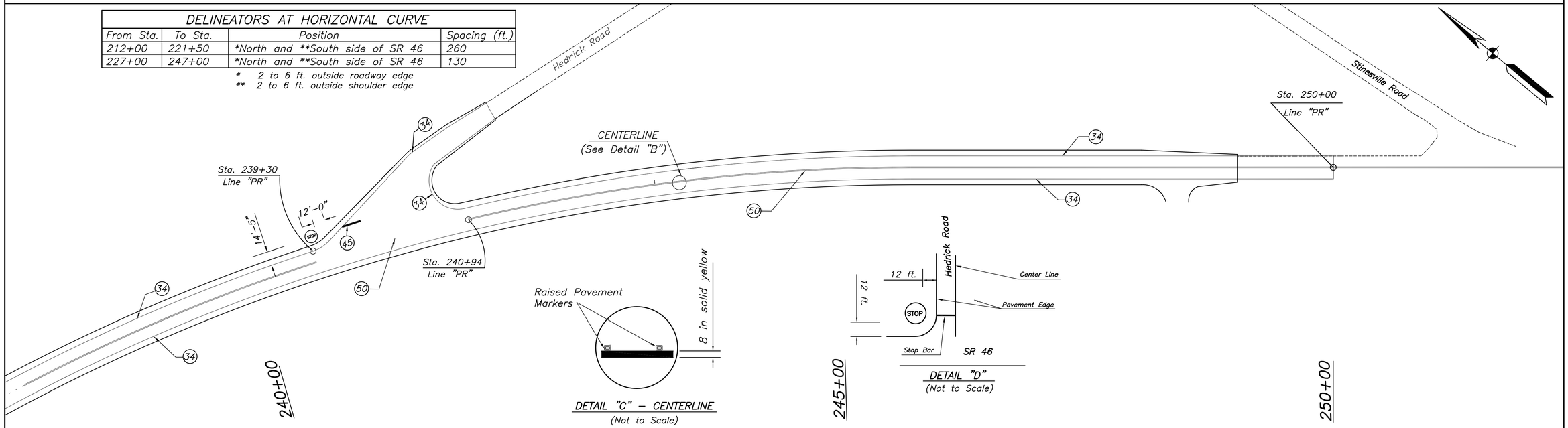


**ASA Engineering Consultants, Inc.**
3717 Woodview Trace
Indianapolis, Indiana 46268
(317) 334-1334

ALI SALEEM ABU-FARES
REGISTERED No. 870062 STATE OF INDIANA
PROFESSIONAL ENGINEER

RECOMMENDED FOR APPROVAL — DESIGN ENGINEER — October 11, 2011 — DATE

DESIGNED SSS | DRAWN JimB
CHECKED ASA | CHECKED AAC

INDIANA DEPARTMENT OF TRANSPORTATION

PAVEMENT MARKING

| HORIZONTAL SCALE | BRIDGE FILE |
|---|---|
| 1" = 50'-0" | |
| VERTICAL SCALE | DESIGNATION |
| 1" = 10'-0" | 9467555 |
| SURVEY BOOK | SHEETS |
| | 25 of 59 |
| CONTRACT | PROJECT NO. |
| 24382 | MWP-5000 (00C) |

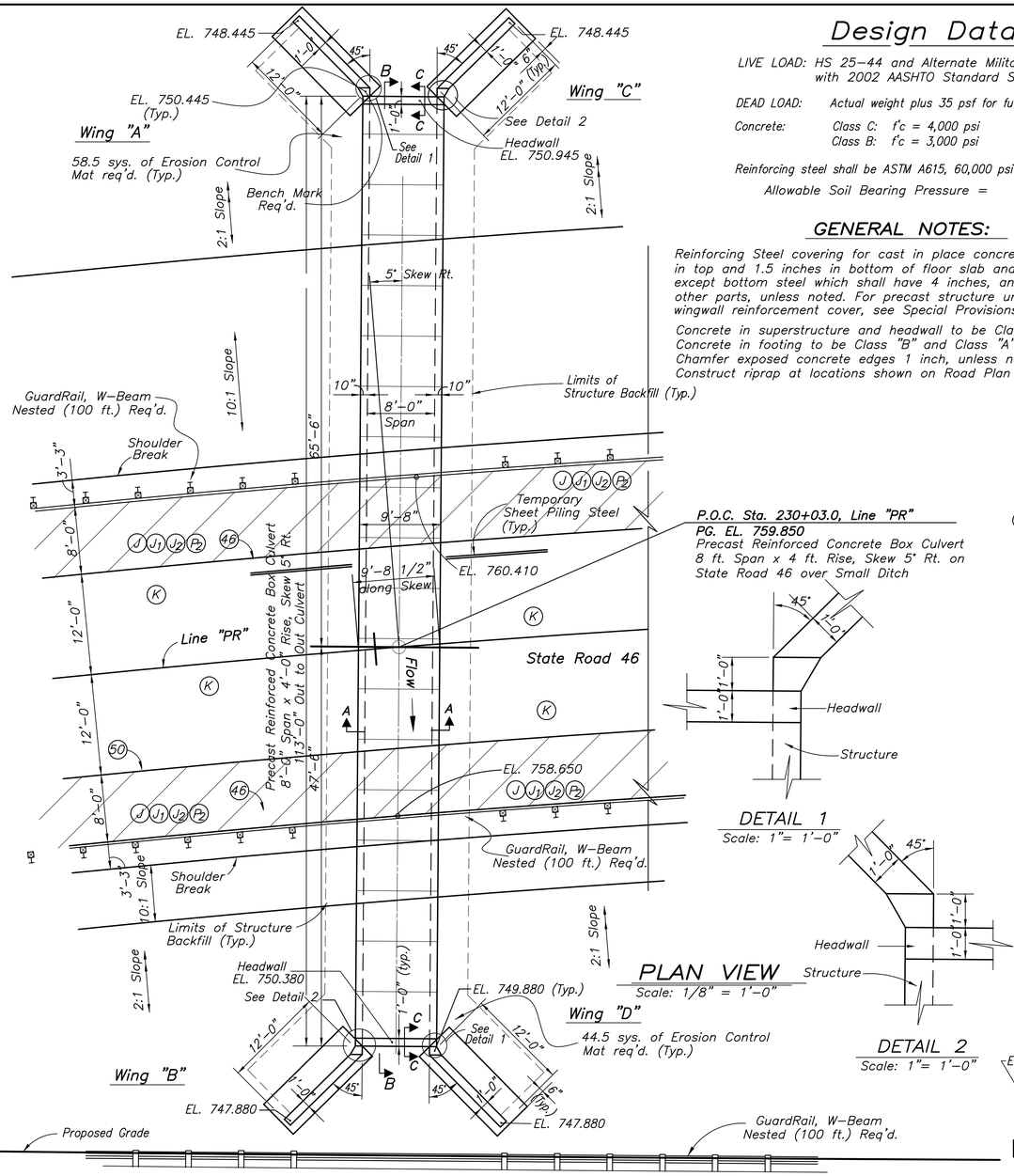


PLAN VIEW
Scale: 1/8" = 1'-0"

# Design Data

LIVE LOAD: HS 25-44 and Alternate Military Loading in accordance with 2002 AASHTO Standard Specifications and interims.

DEAD LOAD: Actual weight plus 35 psf for future wearing surface

Concrete: Class C: f'c = 4,000 psi
Class B: f'c = 3,000 psi

Reinforcing steel shall be ASTM A615, 60,000 psi steel.

Allowable Soil Bearing Pressure = psf

## GENERAL NOTES:

Reinforcing Steel covering for cast in place concrete shall be 2 inches in top and 1.5 inches in bottom of floor slab and 3 inches in footings except bottom steel which shall have 4 inches, and 2 inches in all other parts, unless noted. For precast structure units and precast wingwall reinforcement cover, see Special Provisions.

Concrete in superstructure and headwall to be Class "A".
Concrete in footing to be Class "B" and Class "A" in walls.
Chamfer exposed concrete edges 1 inch, unless noted.
Construct riprap at locations shown on Road Plan and Profile.

P.O.C. Sta. 230+03.0, Line "PR"
PG. EL. 759.850
Precast Reinforced Concrete Box Culvert 8 ft. Span x 4 ft. Rise, Skew 5° Rt. on State Road 46 over Small Ditch




DETAIL 1
Scale: 1"= 1'-0"




DETAIL 2
Scale: 1"= 1'-0"

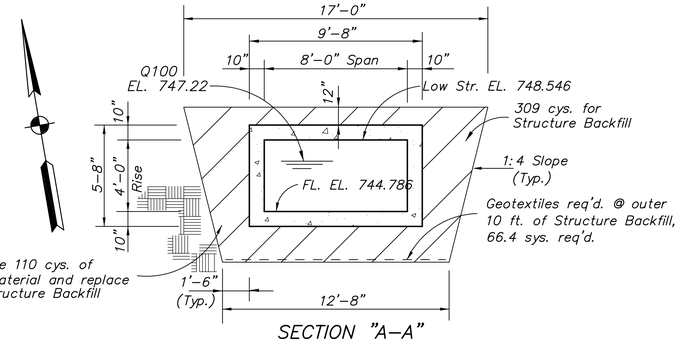


SECTION "A-A"

## DETAIL OF PRECAST REINFORCED CONCRETE BOX CULVERT

Scale: 1/4" = 1'-0"
State Road 46 over Small Ditch, P.O.C. Sta. 230+03.0 "PR"

## BILL OF MATERIALS

### MISCELLANEOUS

| | |
|---|---|
| Precast Reinforced Concrete Box Culvert 8 ft. Span x 4 ft. Rise 5° Skew Rt. | 113'-0" |
| Structure Backfill | 309 cys. |
| Geotextiles | 66.4 sys |
| Erosion Control Mat | 103 sys. |
| Headwalls | 16.2 sys. |
| Wingwalls | 437.2 sys. |
| Sheet Piling Steel, Temporary | 1 LS |

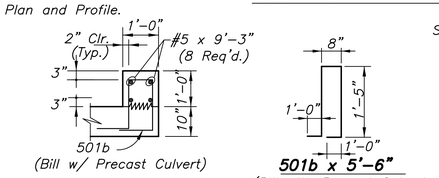


Headwall Detail

SECTION "C-C"
Scale: 1"= 1'-0"

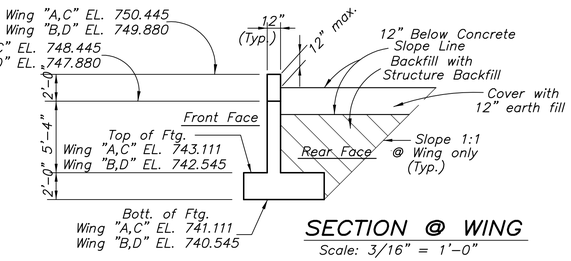


SECTION @ WING
Scale: 3/16" = 1'-0"

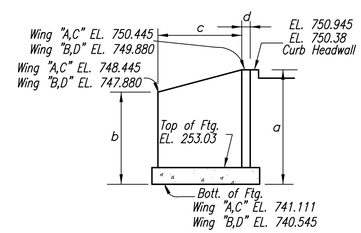


| WINGWALL DIMENSIONS | | | | | |
|---|---|---|---|---|---|
| Wingwall | a | b | c | d | Area |
| A | 9.33 | 7.33 | 12 | 1.0 | 109.3 Sft. |
| B | 9.33 | 7.33 | 12 | 1.0 | 109.3 Sft. |
| C | 9.33 | 7.33 | 12 | 1.0 | 109.3 Sft. |
| D | 9.33 | 7.33 | 12 | 1.0 | 109.3 Sft. |
| Totals = | | | | | 437.2 Sft. |
| **HEADWALL DIMENSIONS** | | | | | |
| North | .834 | | 9.67 | | 8.1 sft. |
| South | .834 | | 9.67 | | 8.1 sft. |
| Totals = | | | | | 16.2 sft. |

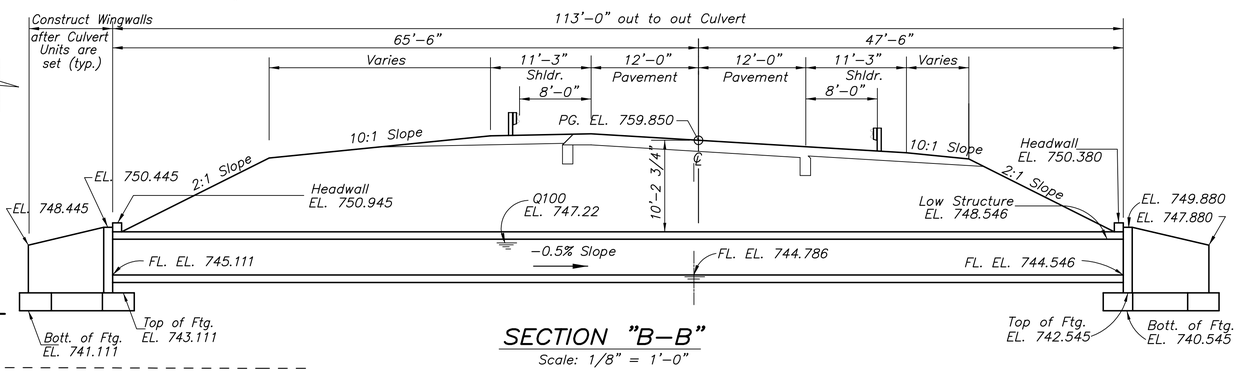


SECTION "B-B"
Scale: 1/8" = 1'-0"

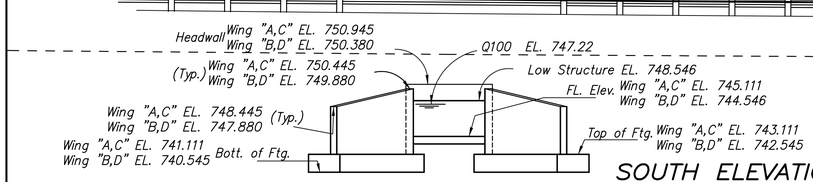


SOUTH ELEVATION
Scale: 1/8" = 1'-0"

NOTE:
Reinforcing Bars designated "(E)" shall be Epoxy Coated.
All dimensions are in feet (ft.) and all elevations are in feet (ft.), except as noted.
See Typical Cross Section Sht. No. 3-7 for pavement types.

## GENERAL PLAN
### PRECAST REINFORCED CONCRETE BOX CULVERT

8 ft. SPAN x 4 ft. RISE, SKEW 5°00' Rt. 48'-0" CLEAR ROADWAY W/ 1'-0" HEADWALLS, 113'-0" TOTAL STRUCTURE LENGTH ON SR 46 OVER SMALL DITCH


ASA Engineering Consultants, Inc.
3717 Woodview Trace
Indianapolis, Indiana 46268
(317) 334-1334


ALI SALEEM ABUFARES REGISTERED No 870062 STATE OF INDIANA PROFESSIONAL ENGINEER

RECOMMENDED FOR APPROVAL — DESIGN ENGINEER — October 11, 2011 DATE

DESIGNED ASA | DRAWN JimB
CHECKED AAC | CHECKED ASA

INDIANA DEPARTMENT OF TRANSPORTATION

GENERAL PLAN

| HORIZONTAL SCALE | BRIDGE FILE |
|---|---|
| As Noted | |
| VERTICAL SCALE | DESIGNATION |
| As Noted | 9467555 |
| SURVEY BOOK | SHEETS |
| | 26 of 59 |
| CONTRACT | PROJECT NO. |
| 24382 | MWP-5000 (00C) |

# PAVEMENT QUANTITIES AND APPROACH TABLE

| LOCATION (STATION) | DESCRIPTION (APPROACH TYPE OR CLASS) | WIDTH | LENGTH | RADII | SKEW | SURFACE BEYOND R/W LINE: COMPACTED AGGREGATE NO. 53, BASE | SURFACE BEYOND R/W LINE: HMA | GRADE 1 | GRADE 2 | EXCAVATION CUT | EXCAVATION FILL | HMA FOR APPROACHES, TYPE "A" Lbs./Sys. 165 SURFACE | HMA FOR APPROACHES, TYPE "A" Lbs./Sys. 275 BASE | HMA FOR APPROACHES, TYPE "B" Lbs./Sys. 165 SURFACE | HMA FOR APPROACHES, TYPE "B" Lbs./Sys. 275 INTERM. | HMA FOR APPROACHES, TYPE "B" Lbs./Sys. 385 INTERM. | HMA FOR APPROACHES, TYPE "B" Lbs./Sys. 880 BASE |
|---|---|---|---|---|---|---|---|---|---|---|---|---|---|---|---|---|---|
| | | Feet | Feet | Feet | Degrees | Feet | Feet | % | % | Cys. | Cys. | Tons | Tons | Tons | Tons | Tons | Tons |
| 199+50.0 to 250+00.0 | Mainline, Line "PR" State Road 46 | 24 | 5050 | | | | | | | 47,380 | 38,056 | | | | | | |
| 12+00.0 to 26+00.0 | Line "S-1-A" County Line Road | 22 | 1400 | | | | | | | 2,275 | 4,030 | | | — | | — | |
| 206+10 "PR" Rt. | Public Road Appr. Type C | 21 | | 25/40 | 25° Rt. | | | | | | | 65.9 | 109.9 | | | | |
| | Ashley Street | | __ | | | | | | | | | | | | | | |
| 209+05 "PR" Lt. | Public Road Appr. Type A | 18 | __ | 40/40 | 10° Lt. | | | | | | | — | — | | | | |
| 209+15 "PR" Rt. | Public Road Appr. Type A | 18 | | 40/40 | 0.6° Lt. | | | | | | | — | — | | | | |
| | Sunnyside Lane | | __ | | | | | | | | | | | | | | |
| 210+53 "PR" Lt. | Class II Drive | 24 | __ | 15/25 | 3° Lt. | | | | | | | | | 12.1 | | 28.3 | |
| 211+50 "PR" Lt. | Class II Drive | 12 | __ | 15/25 | 1° Rt. | | | +1.3 | | | | | | 8.2 | | 19 | |
| 212+66 "PR" Lt. | Class II Drive | | Close Drive | | | | | | | | | | | — | | — | |
| 214+70 "PR" Lt. | Class II Drive | 16 | __ | 15/25 | 32° Lt. | | | | | | | | | 15 | | 35 | |
| 215+33 "PR" Lt. | Class II Drive | 12 | __ | 15/25 | 3° Lt. | | | | | | | | | 9.6 | | 22.4 | |
| 216+71 to | Class IV, Drive | | New Drive | | | | | | | | | | | — | | — | |
| 218+20, "PR" Lt. | Line "S2" | 18 | 166.4 | | | | | | | — | — | | | — | | — | |
| 220+00 "PR" Rt. | Class V Drive | 24 | __ | 25/15 | 0° | | | | | | | | | — | | — | |
| 239+45 "PR" Lt. | Public Road Appr. Type A | 20 | __ | 40/30 | 58° Lt. | | | +15.4 | | | | | | | | | |
| 240+42 "PR" Rt. | Class V Drive | 24 | __ | 25/15 | 0° | | | | | | | | | — | | — | |
| 248+38 "PR" Rt. | Class V Drive | 14 | __ | 25/15 | 1° Lt. | | | | | | | | | — | | — | |
| 21+84 "S-1-A" | Class II Drive | 12 | __ | 25/25 | 3° Rt. | | | | | | | | | 6.3 | | 14.7 | |
| 206+10 Rt. | Temporary Drive | 24 | 39 | — | | | | | | | | | | | | | |
| 209+05 Lt. | Temporary Drive | 18 | 9.33 | — | | | | | | | | | | | | | |
| 209+15 Rt. | Temporary Drive | 18 | 40 | — | | | | | | | | | | | | | |
| 210+53 Rt. | Temporary Drive | 24 | 40 | — | | | | | | | | | | | | | |
| 211+50 Lt. | Temporary Drive | 12 | 13.3 | — | | | | | | | | | | | | | |
| 214+70 Lt. | Temporary Drive | 16 | 16.2 | — | | | | | | | | | | | | | |
| 215+33 Lt. | Temporary Drive | 12 | 22.3 | — | | | | | | | | | | | | | |
| 220+00 Rt. | Temporary Drive | 24 | 40.4 | — | | | | | | | | | | | | | |
| 239+45 Lt. | Temporary Drive | 24 | 11.1 | — | | | | | | | | | | | | | |
| 240+42 Rt. | Temporary Drive | 24 | 31.5 | — | | | | | | | | | | | | | |
| 248+38 Rt. | Temporary Drive | 24 | 10 | — | | | | | | ** | | | | | | | |
| TOTALS = | | | | | | | | | | 50,730 | 42,086 | 137.3 | 229 | 62.8 | 19.4 | 119.4 | 62 |

| LOCATION (STATION) | HMA MATERIALS: 0C/QA-HMA, 1-70, SURFACE, 9.5 mm 165 Tons | 0C/QA-HMA, 3, 70 Intermediate 19.0 mm 275 Tons | 0C/QA-HMA, 1, 64 BASE 19.0 mm 275 Tons | 0C/QA-HMA, 1, 64 BASE 19.0 mm 330 Tons | 0C/QA-HMA, 1, 64, SURFACE, 9.5 mm 165 Tons | 0C/QA-HMA, 1, 64 Intermediate 19.0 mm 495 Tons | 0C/QA-HMA, 3, 70 Intermediate 0G 9.0 mm 250 Tons | TYPE "A," SURFACE 165 Tons | TYPE "A," Intermediate 385 Tons | SEAL COAT TYPE 5 Sys. | ASPHALT FOR TACK COAT Tons | Temporary For Driveways: COMPACTED AGGREGATE, NO. 53 Tons | COMPACTED AGGREGATE, NO. 53, BASE, DEPTH: 4 Inch Tons | 6 Inch Tons | 7 Inch Tons | 8 Inch Tons | MILLING, TRANSITION ASPHALT Sys. | SUBGRADE TREATMENT, STABILIZATION Sys. | SUBGRADE TREATMENT TYPE 1 A Sys. | SUBGRADE TREATMENT TYPE IIIA Sys. | PAVEMENT, REMOVE Sys. | EXCAVATION WATERWAY Cys. | WATER Mg. | SEED MIXTURE TYPE P Lbs. | MULCHING MATERIALS Tons | SEED MIXTURE TYPE R Lbs. | MOBILIZATION and DEMOBILIZATION FOR SEEDING Each | FERTILIZER Tons |
|---|---|---|---|---|---|---|---|---|---|---|---|---|---|---|---|---|---|---|---|---|---|---|---|---|---|---|---|---|
| 199+50.0 to 250+00.0 | 1272 | 2119 | 2119 | 2543 | 224.4 | 673.1 | 1927 | | | | 16.2 | | | 2386 | | | 320 | 15414 | | | | | 48.4 | | 13.2 | 1124 | 2 | 2.6 |
| 12+00.0 to 26+00.0 | | | | | | | | 329.8 | 769.4 | | 1.0 | | | | 1668 | | 293.4 | 3997 | | | | | | | | | | |
| 206+10 "PR" Rt. | | | | | | | | | | | | | | | | | | | | | | | | | | | | |
| Ashley Street | | | | | | | | | | | | | | | | | | | | | | | | | | | | |
| 209+05 "PR" Lt. | | | | | | | | | | | | | | | | | | | | | | | | | | | | |
| 209+15 "PR" Rt. | | | | | | | | | | | | | | | | | | | | | | | | | | | | |
| Sunnyside Lane | | | | | | | | | | | | | | | | | | | | | | | | | | | | |
| 210+53 "PR" Lt. | | | | | | | | | | | | | | | | | | | 147.1 | | | | | | | | | |
| 211+50 "PR" Lt. | | | | | | | | | | | | | | | | | | | 98.9 | | | | | | | | | |
| 212+66 "PR" Lt. | | | | | | | | | | | | | | | | | | | | | | | | | | | | |
| 214+70 "PR" Lt. | | | | | | | | | | | | | | | | | | | 184.7 | | | | | | | | | |
| 215+33 "PR" Lt. | | | | | | | | | | | | | | | | | | | 122.5 | | | | | | | | | |
| 216+71 to | | | | | | | | | | | | | | | 108.7 | | | | | | | | | | | | | |
| 218+20, "PR" Lt. | — | — | — | — | — | — | — | | | | — | | | — | | | — | — | | | | | — | | — | — | — | — |
| 220+00 "PR" Rt. | | | | | | | | | | | | | | | | | | | | | | | | | | | | |
| 239+45 "PR" Lt. | | | | | | | | 53.1 | 123.8 | | | 0.2 | | | 288 | | | 757 | | | | | | | | | | |
| 240+42 "PR" Rt. | | | | | | | | | | | | | | | | | | | | | | | | | | | | |
| 248+38 "PR" Rt. | | | | | | | | | | | | | | | | | | | | | | | | | | | | |
| 21+84 "S-1-A" | | | | | | | | | | | | | | | | | | | 76.3 | | | | | | | | | |
| 206+10 Rt. | | | | | | | | | | | | 52 | | | | | | | | | | | | | | | | |
| 209+05 Lt. | | | | | | | | | | | | 9.3 | | | | | | | | | | | | | | | | |
| 209+15 Rt. | | | | | | | | | | | | 40 | | | | | | | | | | | | | | | | |
| 210+53 Rt. | | | | | | | | | | | | 53.3 | | | | | | | | | | | | | | | | |
| 211+50 Lt. | | | | | | | | | | | | 8.9 | | | | | | | | | | | | | | | | |
| 214+70 Lt. | | | | | | | | | | | | 14.4 | | | | | | | | | | | | | | | | |
| 215+33 Lt. | | | | | | | | | | | | 14.9 | | | | | | | | | | | | | | | | |
| 220+00 Rt. | | | | | | | | | | | | 53.9 | | | | | | | | | | | | | | | | |
| 239+45 Lt. | | | | | | | | | | | | 14.8 | | | | | | | | | | | | | | | | |
| 240+42 Rt. | | | | | | | | | | | | 42 | | | | | | | | | | | | | | | | |
| 248+38 Rt. | | | | | | | | | | | | 13.3 | | | | | | | | | | | | | | | | |
| TOTALS = | 1272 | 2119 | 2119 | 2543 | 224.4 | 673.1 | 1927 | 382.9 | 893.2 | | 27.5 | 317 | | 2386 | 2409.4 | 108.7 | 613.4 | 20168 | | 770.2 | | | 48.4 | | 13.2 | 1124 | 2 | 2.6 |

** Includes 385 & 690 Cys. Removal of Soft Material From Ditches.
Estimated Benching Quantity = 3335 Cys.

# STRUCTURE DATA

| STRUCTURE NUMBER | LOCATION: STATION Line "PR" | LEFT | CROSS | RIGHT | SIZE Inches | PIPE TYPE | MANHOLE, INLET, CATCH BASIN, OR SPECIALTY STRUCTURE | LENGTH Feet | SKEW | INVIVE ANGLE | FLOW LINE: COVER Feet | UP STREAM ELEV. | DOWN STREAM ELEV. | SERVICE LIFE YR. | SITE DESIGNATION | pH | BACKFILL METHOD | STRUCTURE BACKFILL, TYPE 1 Cys. | FLOWABLE BACKFILL Cys. | REVETMENT RIPRAP Tons | Concrete Class A, For STR. Cys. | PIPE END SECTION Each | GEOTEXTILES Sys. | NO. 2 STONE Cys. | CLASS 1 RIPRAP (18" DEEP) Tons | CLASS 2 RIPRAP (18" DEEP) Tons | WINGWALLS Sys. | D1 White DELINEATORS Each | REMARKS |
|---|---|---|---|---|---|---|---|---|---|---|---|---|---|---|---|---|---|---|---|---|---|---|---|---|---|---|---|---|---|
| 1 | 206+10 | | | X | 18"ø | 1 | | 70 | 22° | 65° | 3.2 | 763.241 | 762.682 | 50 | | 6.5 | 1 | 10.5 | | | | 2 | | | | | | 1 | |
| 2 | 206+99 | | X | | 60"ø | 1 | | 124 | 10° | — | 10.1 | 757.454 | 756.35 | 50 | | 6.5 | 1 | 151.8 | | | | | 49 | | 36.8 | | | | w/Conc. Anchors |
| 3 | 209+05 | X | | | 24"ø | 1 | | 70 | 1° | 80° | 1.2 | 765.84 | 765.49 | 50 | | 6.5 | 1 | 14.1 | | | | 2 | | | | | | 1 | |
| 4 | 209+15 | | | X | 24"ø | 1 | | 62 | 1° | 90° | 1.9 | 763.895 | 761.795 | 50 | | 6.5 | 1 | 16 | | | | 2 | | | | | | 1 | |
| 5 | 210+53 | | | X | 15"ø | 3 | | 44 | 2° | 93° | 1.0 | 767.412 | 766.519 | 50 | | 6.5 | 2 | 2.2 | | | | 2 | | | | | | 1 | |
| 6 | 211+50 | X | | | 15"ø | 3 | | 52 | 0° | 90° | 3.2 | 769.132 | 768.248 | 50 | | 6.5 | 2 | 2.1 | | | | 2 | | | | | | 1 | |
| 8 | 214+70 | X | | | 15"ø | 3 | | 66 | 0° | 58° | 4.5 | 777.232 | 776.11 | 50 | | 6.5 | 2 | 2.8 | | | | 2 | | | | | | 1 | |
| 9 | 215+33 | X | | | 15"ø | 3 | | 58 | 0° | 90° | 4.1 | 778.686 | 777.70 | 50 | | 6.5 | 2 | 2.4 | | | | 2 | | | | | | 1 | |
| 11 | 220+00 | | | X | 15"ø | 3 | | 66 | 0° | 90° | 3.3 | 776.995 | 776.005 | 50 | | 6.5 | 2 | 2.8 | | | | 2 | | | | | | 1 | |
| 12 | 230+03 | | X | | 8' Span x 4' Rise | | Precast Reinf. Conc. Box Culvert | 113 | 5° | — | 2.1 | 745.111 | 744.546 | 50 | | 6.5 | 2 | 309 | | | | | 142.7 | | 57.3 | | 37 | | |
| 13 | 239+45 | X | | | 15"ø | 1 | | 144 | 0° | 58° | 4.6 | 766.491 | 764.763 | 50 | | 6.5 | 1 | 4.5 | | | | – | | | | | | | |
| 14 | 240+42 | | | X | 15"ø | 3 | | 48 | 0° | 90° | 1.5 | 764.780 | 764.242 | 50 | | 6.5 | 2 | 2.6 | | | | 2 | | | | | | 1 | |
| 15 | 243+67 | | X | | 24"ø | 1 | | 90 | 0° | — | 3.0 | 766.85 | 762.35 | 50 | | 6.5 | 1 | 23.6 | | | | 2 | 78.6 | | | 58.9 | | 1 | |
| 16 | 248+38 | | | X | 15"ø | 3 | | 44 | 9° | 89° | 1.1 | 777.591 | 775.563 | 50 | | 6.5 | 2 | 2.3 | | | | 2 | | | | | | 1 | |
| | Line "S-1-A" | | | | | | | | | | | | | | | | | | | | | | | | | | | | |
| 17 | 19+45.60 | | X | | 24"ø | 1 | | 92 | 11° | 97° | 5.7 | 764.49 | 757.77 | 50 | | 6.5 | 1 | 24.4 | | | | 2 | | | | | | 1 | |
| 18 | 20+66.40 | | X | | 24"ø | 1 | | 72 | 11° | 83° | 3.6 | 765.09 | 761.56 | 50 | | 6.5 | 1 | 19.7 | | | | 2 | | | | | | 1 | |
| 19 | 21+84.00 | X | | | 15"ø | 3 | | 32 | 3° | 93° | 1.0 | 767.834 | 767.322 | 50 | | 6.5 | 2 | 1.6 | | | | 2 | | | | | | 1 | |
| 20 | 22+25 | X | | | 15"ø | 1 | Inlet A-8 | 41 | 0° | – | 2.8 | 766.563 | 765.743 | 50 | | 6.5 | 1 | 9.4 | | | | 1 | | | | | | | T/Casting EL.779.313 |
| 21 | 25+00 | X | | | 18"ø | 1 | Inlet E-7 | 39 | 0° | – | 1.6 | 773.806 | 773.495 | 50 | | 6.5 | 1 | 7.8 | | | | 1 | | | | | | | T/Casting EL.775.89 |
| | Line "S2" | | | | | | | | | | | | | | | | | | | | | | | | | | | | |
| 9(c) | 0+93.93 | X | | | 15"ø | 1 | Inlet S-14 | 33 | 0° | –° | 7.1 | 784.509 | 778.968 | 50 | | 6.5 | 1 | 7.8 | | | | 1 | – | | – | – | – | | on V-Ditch/Tc 787.742 |
| 9(b) | 1+39.67 | | X | | 18"ø | 3 | | 56 | 0° | 90° | 5.1 | 778.951 | 778.817 | 50 | | 6.5 | 2 | --- | | | | 2 | | | | | | 1 | on "S2" of Church Dr. |
| | | | | | | | Temporary Structures | | | | | | | | | | | | | | | | | | | | | | |
| 26 | 208+50 "PR" | X | | | 12"ø | 2 | Inlet S-14 | 32 | 90° | 90° | 1.88 | 764.58 | 764.25 | 50 | 26 | 6.5 | | | | | | | | | | | | | |
| 27 | 209+05 "PR" | X | | | 12"ø | 1 | | 26 | 0° | 90° | 1.32 | 765.406 | 764.964 | 50 | 27 | 6.5 | | | | | | | | | | | | | |
| 28 | 211+50 "PR" | X | | | 12"ø | 3 | | 22 | 0° | 90° | 1.41 | 772.757 | 771.943 | 50 | 28 | 6.5 | | | | | | | | | | | | | |
| 29 | 214+70 "PR" | X | | | 12"ø | 3 | | 32 | 0° | 90° | 2.47 | 784.782 | 784.19 | 50 | 29 | 6.5 | | | | | | | | | | | | | |
| 30 | 215+33 "PR" | X | | | 12"ø | 3 | | 26 | 0° | 90° | 2.34 | 786.262 | 785.30 | 50 | 30 | 6.5 | | | | | | | | | | | | | |
| 31 | 239+45 "PR" | X | | | 12"ø | 1 | | 26 | 0° | 90° | 0.21 | 769.269 | 768.476 | 50 | 31 | 6.5 | | | | | | | | | | | | | |
| | TOTALS = | | | | | | | | | | | | | | | | | 617.4 | | | | | 270.3 | | 94.1 | 58.9 | 37 | 16 | |

# GUARDRAIL SUMMARY TABLE

| LOCATION: FROM STATION Line "A" | TO STATION Line "A" | LEFT | MEDIAN LEFT | MEDIAN RIGHT | RIGHT | W-BEAM GUARDRAIL LENGTH: STANDARD POST AT 6'-3" SPA. Feet | GUARDRAIL END TREATMENT GS Each | GUARDRAIL, W-BEAM NESTED (100 Feet) Each | CURVED TERMINAL ENDS Each | CURVED W-BEAM GUARDRAIL SYSTEM: TERMINAL SYSTEM Type | TERMINAL SYSTEM Each | CONNECTOR SYSTEM Type | CONNECTOR SYSTEM Each | GUARDRAIL REMOVE Feet | D1 WHITE DELINEATORS Each |
|---|---|---|---|---|---|---|---|---|---|---|---|---|---|---|---|
| | 203+99.17 | X | | | | | 1 | | | | | | | | |
| 203+99.17 | 208+42.92 | X | | | | 443.75 | | | | | | | | | |
| 208+42.92 | 208+84.17 | X | | | | | | | | | | 2 | 1 | | |
| 205+95.35 | 206+36.60 | | | | X | | | | | | | 2 | 1 | | |
| 206+36.60 | 208+61.12 | | | | X | 224.52 | | | | | | | | | |
| 208+61.12 | 209+02.37 | | | | X | | | | | | | 2 | 1 | | |
| 206+13 | 208+93.7 | | | | X | | | | | | | | | 280.7 | |
| | 229+37.25 | X | | | | | 1 | | | | | | | | |
| 229+37.25 | 229+56.0 | X | | | | 18.75 | | | | | | | | | |
| 229+56.0 | 230+56.0 | X | | | | | | 1 | | | | | | | |
| 230+56.0 | 232+93.5 | X | | | | 237.5 | | | | | | | | | |
| 232+93.5 | | X | | | | | 1 | | | | | | | | |
| | 227+13.5 | | | | X | | 1 | | | | | | | | |
| 227+13.5 | 229+51.0 | | | | X | 237.5 | | | | | | | | | |
| 229+51.0 | 230+51.0 | | | | X | | | 1 | | | | | | | |
| 230+51.0 | 230+69.75 | | | | X | 18.75 | | | | | | | | | |
| 230+69.75 | | | | | X | | 1 | | | | | | | | |
| Line "S2" | Line "S2" | | | | | | | | | | | | | | |
| -0+02.0 | 0+98.0 | | | | X | 100 | | | 2 | | | | | | |
| TOTALS = | | | | | | 1280.77 | 5 | 2 | 2 | | | | 3 | 280.7 | |

# MONUMENTS

| Location | STATION | DESCRIPTION | Each |
|---|---|---|---|
| ℄ | P.O.T. 201+00.0 "PR" | Type B | 1 |
| ℄ | P.C. 212+93.56 "PR" | Type B | 1 |
| ℄ | P.I. 216+71.65 "PR" | Type B | 1 |
| ℄ | P.T. 220+49.12 "PR" | Type B | 1 |
| ℄ | P.T. 245+59.43 "PR" | Type B | 1 |
| ℄ | P.O.T. 248+00.0 "PR" | Type B | 1 |
| ℄ | P.C. 228+22.83 "PR" | Type B | 1 |
| Lt. of "PR" | P.I. 237+50.78 "PR" | Type C | 1 |
| | | TOTALS = | C =1 |
| | | | B =7 |

# REVISIONS

| DATE | ITEM |
|---|---|
| | |
| | |
| | |


ASA Engineering Consultants, Inc.
3717 Woodview Trace
Indianapolis, Indiana 46268
(317) 334-1334


ALI SALEEM ABUFARES REGISTERED No. 870062 STATE OF INDIANA PROFESSIONAL ENGINEER

RECOMMENDED FOR APPROVAL — DESIGN ENGINEER — DATE October 11, 2011

DESIGNED JimB | DRAWN JimB | CHECKED AAC | CHECKED JTK

INDIANA DEPARTMENT OF TRANSPORTATION

ROAD SUMMARY OF QUANTITIES

| HORIZONTAL SCALE | BRIDGE FILE |
|---|---|
| As Noted | |
| VERTICAL SCALE | DESIGNATION |
| As Noted | 9467555 |
| SURVEY BOOK | SHEETS |
| | 27 of 59 |
| CONTRACT | PROJECT NO. |
| 24382 | MWP-5000 (00C) |

# PIPE MATERIAL TABLE

| | | STRUCTURE NUMBER | | | | | | | | | | | | | | | | | | | | |
|---|---|---|---|---|---|---|---|---|---|---|---|---|---|---|---|---|---|---|---|---|---|---|
| | | 1 | 2 | 3 | 4 | 5 | 6 | 8 | 9 | 9(b) | 9(c) | 11 | 13 | 14 | 15 | 16 | 17 | 18 | 19 | 20 | 21 | |
| PIPE TYPE/ SHAPE | | 1 | 1 | 1 | 1 | 3 | 3 | 3 | 3 | 3 | 1 | 3 | 1 | 3 | 1 | 3 | 1 | 1 | 3 | 1 | 1 | |
| SMOOTH PIPE SIZE | | 18 Inch | 60 Inch | 24 Inch | 24 Inch | 15 Inch | 15 Inch | 15 Inch | 15 Inch | 18 Inch | 15 Inch | 15 Inch | 15 Inch | 15 Inch | 24 Inch | 15 Inch | 24 Inch | 24 Inch | 15 Inch | 15 Inch | 18 Inch | |
| CORRUGATED PIPE SIZE | | 18 Inch | 60 Inch | 24 Inch | 24 Inch | 15 Inch | 15 Inch | 15 Inch | 15 Inch | 18 Inch | 15 Inch | 15 Inch | 15 Inch | 15 Inch | 24 Inch | 15 Inch | 24 Inch | 24 Inch | 15 Inch | 15 Inch | 18 Inch | |
| RCP/ RCHEP (S) | CLASS | II | | II | II | II | II | II | II | II | II | II | II | II | II | II | II | II | II | II | II | |
| | $D_{0.3}$ RATING | 50 | | 50 | 50 | 60 | 50 | 50 | 50 | 50 | 50 | 50 | 50 | 50 | 50 | 60 | 50 | 50 | 60 | 50 | 50 | |
| NON-REINFORCED CONCRETE PIPE, CLASS 3 (S) | | 18 Inch | | | 24 Inch | | 15 Inch | 15 Inch | 15 Inch | 18 Inch | 15 Inch | 15 Inch | 15 Inch | 15 Inch | 24 Inch | | 24 Inch | 24 Inch | | 15 Inch | 18 Inch | |
| CORRUGATED PE PIPE, TYPE S (S) * | | 18 Inch | | | | | 15 Inch | 15 Inch | 15 Inch | 18 Inch | 15 Inch | 15 Inch | 15 Inch | | 24 Inch | | 24 Inch | 24 Inch | | 15 Inch | 18 Inch | |
| RIBBED PE PIPE (S) * | | 18 Inch | | | | | | | | 18 Inch | 15 Inch | | 15 Inch | | 24 Inch | | 24 Inch | 24 Inch | | | 18 Inch | |
| SMOOTH WALL PE PIPE (S)*/ MAXIMUM DR. 26 | | =26.0 | | | | | =26.0 | =26.0 | =26.0 | =26.0 | =26.0 | =26.0 | =26.0 | | =26.0 | | =26.0 | =26.0 | | =26.0 | =26.0 | |
| PROFILE WALL PVC PIPE (S) | | 18 Inch | | | | | 15 Inch | 15 Inch | 15 Inch | 18 Inch | 15 Inch | 15 Inch | 15 Inch | | 24 Inch | | 24 Inch | 24 Inch | | 15 Inch | 18 Inch | |
| SMOOTH WALL PVC PIPE (S) * | | 18 Inch | | | | | 15 Inch | 15 Inch | 15 Inch | 18 Inch | 15 Inch | 15 Inch | 15 Inch | | 24 Inch | | 24 Inch | 24 Inch | | 15 Inch | 18 Inch | |
| VITRIFIED CLAY PIPE, EXTRA STRENGTH (S) | | 18 Inch | | | 24 Inch | | 15 Inch | 15 Inch | 15 Inch | 18 Inch | 15 Inch | 15 Inch | 15 Inch | 15 Inch | 24 Inch | | 24 Inch | 24 Inch | | 15 Inch | 18 Inch | |
| CORRUGATED STEEL PIPE/ PIPE-ARCH: FULLY BIT. PAVED & LINED (S) | CORR. PROFILE | | | | | | | | | | | | | | | | | | | | | |
| | THICKNESS | | | | | | | | | | | | | | | | | | | | | |
| ZINC COATED (C) | CORR. PROFILE | | | | | | | | | | | | | | | | | | | | | |
| | THICKNESS | | | | | | | | | | | | | | | | | | | | | |
| ZINC COATED W/ BPI (C) | CORR. PROFILE | | | | | | | | | | | | | | | | | | | | | |
| | THICKNESS | | | | | | | | | | | | | | | | | | | | | |
| ALUM. COATED TYPE 2 (C) | CORR. PROFILE | | | | | | | | | | | | | | | | | | | | | |
| | THICKNESS | | | | | | | | | | | | | | | | | | | | | |
| ALUM. COATED TYPE 2 W/ BPI (C) | CORR. PROFILE | | | | | | | | | | | | | | | | | | | | | |
| | THICKNESS | | | | | | | | | | | | | | | | | | | | | |
| POLYMER PRECOATED GALVANIZED (C) | CORR. PROFILE | | | | | | | | | | | | | | | | | | | | | |
| | THICKNESS | | | | | | | | | | | | | | | | | | | | | |
| POLYMER PRECOATED GALVANIZED W/ BPI (C) | CORR. PROFILE | | | | | | | | | | | | | | | | | | | | | |
| | THICKNESS | | | | | | | | | | | | | | | | | | | | | |
| FIBER BONDED BITUMINOUS COATED (C) | CORR. PROFILE | 68 x 13 | | 68 x 13 | 68 x 13 | 68 x 13 | 68 x 13 | 68 x 13 | 68 x 13 | 68 x 13 | 68 x 13 | 68 x 13 | 68 x 13 | 68 x 13 | 68 x 13 | 68 x 13 | 68 x 13 | 68 x 13 | 68 x 13 | 68 x 13 | 68 x 13 | |
| | THICKNESS | 2.77 | | 2.77 | 2.77 | 2.77 | 2.77 | 2.77 | 2.77 | 2.77 | 2.77 | 2.77 | 2.77 | 2.77 | 2.77 | 2.77 | 2.77 | 2.77 | 2.77 | 2.77 | 2.77 | |
| FIBER BONDED BITUMINOUS COATED W/ BPI (C) | CORR. PROFILE | | | | | | | | | | | | | | | | | | | | | |
| | THICKNESS | | | | | | | | | | | | | | | | | | | | | |
| CORRUGATED ALUM. ALLOY PIPE (C) | CORR. PROFILE | 68 x 13 | | 68 x 13 | 68 x 13 | 68 x 13 | 68 x 13 | 68 x 13 | 68 x 13 | 68 x 13 | 68 x 13 | 68 x 13 | 68 x 13 | 68 x 13 | 68 x 13 | 68 x 13 | 68 x 13 | 68 x 13 | 68 x 13 | 68 x 13 | 68 x 13 | |
| | THICKNESS | 1.52 | | 1.52 | 1.52 | 1.52 | 1.52 | 1.52 | 1.52 | 1.52 | 1.52 | 1.52 | 1.52 | 1.52 | 1.52 | 1.52 | 1.52 | 1.52 | 1.52 | 1.52 | 1.52 | |
| CORRUGATED ALUM. ALLOY PIPE W/ BPI (C) | CORR. PROFILE | | | | | | | | | | | | | | | | | | | | | |
| | THICKNESS | | | | | | | | | | | | | | | | | | | | | |
| STR. PLATE ALUMINUM ALLOY PIPE (C) | CORR. PROFILE | | | | | | | | | | | | | | | | | | | | | |
| | THICKNESS | | | | | | | | | | | | | | | | | | | | | |
| STR. PLATE ALUMINUM ALLOY PIPE W/ CFP (C) | CORR. PROFILE | | | | | | | | | | | | | | | | | | | | | |
| | THICKNESS | | | | | | | | | | | | | | | | | | | | | |
| STR. PLATE STEEL PIPE (C) | CORR. PROFILE | | | | | | | | | | | | | | | | | | | | | |
| | THICKNESS ** | | | | | | | | | | | | | | | | | | | | | |
| STR. PLATE STEEL PIPE W/ CFP (C) | CORR. PROFILE | | | | | | | | | | | | | | | | | | | | | |
| | THICKNESS ** | | | | | | | | | | | | | | | | | | | | | |

## LEGEND

| | |
|---|---|
| RCP– | REINFORCED CONCRETE PIPE |
| RCHEP– | REINFORCED CONCRETE HORIZONTAL ELLIPTICAL PIPE |
| PE– | POLYETHYLENE |
| DR– | DIMENSION RATIO |
| PVC– | POLYVINYL CHLORIDE |
| BIT– | BITUMINOUS |
| CORR– | CORRUGATION |
| BPI– | BITUMINOUS PAVED INVERT |
| ALUM– | ALUMINUM |
| STR– | STRUCTURAL |
| CFP– | CONCRETE FIELD PAVING |
| CIR– | CIRCULAR PIPE |
| DEF– | DEFORMED PIPE |
| (S)– | SMOOTH PIPE MATERIAL |
| (C)– | CORRUGATED PIPE MATERIAL |
| OK– | ACCEPTABLE FOR USE |
| (LS)– | LOCK SEAM PIPE REQUIRED |
| *– | REFER TO STANDARD DRAWING |
| | DIAMETER APPROPRIATE FOR PAY ITEM DIAMETER |
| **– | TABULATED THICKNESS REFERS TO TOP & SIDE PLATES. BOTTOM PLATES SHALL BE OF 715-PHCL-18 OR 19 FOR NOMINAL NEXT GREATER AVAILABE THICKNESS. |

## UNDISTRIBUTED QUANTITIES

(To be used for Field Tile if encountered)

Pipe, Type 4, Circular, 6 Inch = 100 ft.
Pipe, Type 4, Circular, 8 Inch = 100 ft.
Pipe, Type 4, Circular, 10 Inch = 100 ft.

## MAILBOX APPROACHES

| LT/RT | BOX STATION | DESCRIPTION | WIDTH W, (ft.) | ASSEMBLY REQ'D SINGLE | ASSEMBLY REQ'D DOUBLE |
|---|---|---|---|---|---|
| Rt. | 209+01 | Behind new GuardRail | —— | One | —— |
| Rt. | 211+87 | Mailbox Assembly, Double | 10 ft. | —— | One |
| Rt. | 214+60 | Mailbox Assembly, Double | 10 ft. | One | —— |
| Rt. | 215+35 | Mailbox Assembly, Double | 10 ft. | One | —— |
| | | TOTALS = | | 3 | 1 |

## RIPRAP SIDE DITCH AND SODDING SUMMARY TABLE

| LOCATION: FROM STATION | TO STATION | LEFT | MEDIAN | RIGHT | RIPRAP DITCH (Tons): ACTUAL LENGTH | REVETMENT RIPRAP (18 in. Deep) | RIPRAP DRAINAGE TURNOUT | GEOTEXTILES | 3 FT. BOTTOM DITCH TO EXISTING V DITCH | 3 FT. BOTTOM DITCH TO EXISTING V DITCH | SODDING: FOR DITCHES | TOTAL SODDING | NURSERY SODDING FOR LAWNS |
|---|---|---|---|---|---|---|---|---|---|---|---|---|---|
| | | | | | Feet | Tons | Tons | Sys. | Sys. | Tons | Sys. | Sys. | Sys. |
| 210+00 "PR" | 211+20 "PR" | X | | | 120 | | | | | | 137.6 | 137.6 | |
| 207+41 "PR" | 208+25 "PR" | | | X | 84 | | | | | | 87.7 | 87.7 | |
| 210+25 "PR" | 212+75 "PR" | | | X | 199 | | | | | | 228.2 | 228.2 | |
| 214+83 "PR" | 216+25 "PR" | X | | | 78 | | | | | | 89.4 | 89.4 | |
| 219+50 "PR" | 222+75 "PR" | X | | | 325 | | | | | | 372.7 | 372.7 | |
| 214+25 "PR" | 217+00 "PR" | | | X | 275 | | | | | | 315.3 | 315.3 | |
| 219+50 "PR" | 222+25 "PR" | | | X | 199 | | | | | | 228.2 | 228.2 | |
| 227+50 "PR" | 229+93 "PR" | X | | | 243 | | | | | | 278.6 | 278.6 | |
| 227+25 "PR" | 229+85 "PR" | | | X | 260 | | | | | | 298.1 | 298.1 | |
| 233+00 "PR" | 241+00 "PR" | | | X | 800 | | | | | | 917.3 | 917.3 | |
| 232+50 "PR" | 241+50 "PR" | X | | | 680 | | | | | | 866.9 | 866.9 | |
| 242+00 "PR" | 243+00 "PR" | | | X | 100 | | | | | | 114.7 | 114.7 | |
| 243+85 "PR" | 248+00 "PR" | X | | | 415 | | | | | | 475.9 | 475.9 | |
| 243+75 "PR" | 245+75 "PR" | | | X | 200 | | | | | | 229.3 | 229.3 | |
| 12+75 "S-1-A" | 13+00 "S-1-A" | X | | | 25 | | | | 19.2 | | | 19.2 | |
| 13+00 "S-1-A" | 15+25 "S-1-A" | X | | | 225 | | | | | | 233 | 233 | |
| 13+00 "S-1-A" | 19+35 "S-1-A" | | | X | 635 | | | | | | 657.6 | 657.6 | |
| 12+75 "S-1-A" | 13+00 "S-1-A" | | | X | 25 | | | | 19.2 | | | 19.2 | |
| 20+65 "S-1-A" | 22+75 "S-1-A" | | | X | 210 | | | | | | 217.5 | 217.5 | |
| 20+80 "S-1-A" | 25+00 "S-1-A" | X | | | 420 | | | | | | 434.9 | 434.9 | |
| 200+75 "PR" | 201+00 "PR" | X | | | 25 | | | 20.6 | | 15.4 | | | |
| 201+00 "PR" | 203+25 "PR" | X | | | 225 | 193.5 | | 258 | | | | | |
| 203+25 "PR" | 206+80 "PR" | X | | | 355 | 278.1 | | 370.8 | | | | | |
| 206+95 "PR" | 208+75 "PR" | X | | | 180 | 141 | | 188 | | | | | |
| 211+80 "PR" | 214+05 "PR" | X | | | 225 | 193.5 | | 258 | | | | | |
| 200+75 "PR" | 201+00 "PR" | | | X | 25 | | | 41.1 | | 20.5 | | | |
| 201+00 "PR" | 205+33 "PR" | | | X | 433 | 387 | | 516 | | | | | |
| 208+25 "PR" | 210+25 "PR" | | | X | 120 | 103.2 | | 137.6 | | | | | |
| 222+75 "PR" | 227+75 "PR" | X | | | 420 | 481.6 | | 361.2 | | | | | |
| SUB-TOTALS = | | | | | —— | 1777.9 | —— | 2151.3 | —— | 35.9 | —— | 6221.5 | —— |

## RIPRAP SIDE DITCH AND SODDING SUMMARY TABLE

| LOCATION: FROM STATION | TO STATION | LEFT | MEDIAN | RIGHT | RIPRAP DITCH (Tons): ACTUAL LENGTH | REVETMENT RIPRAP (18 in. Deep) | RIPRAP DRAINAGE TURNOUT | GEOTEXTILES | 3 FT. BOTTOM DITCH TO EXISTING V DITCH | 3 FT. BOTTOM DITCH TO EXISTING V DITCH | SODDING: FOR DITCHES | TOTAL SODDING | NURSERY SODDING FOR LAWNS |
|---|---|---|---|---|---|---|---|---|---|---|---|---|---|
| | | | | | Feet | Tons | Tons | Sys. | Sys. | Tons | Sys. | Sys. | Sys. |
| 212+75 "PR" | 214+25 "PR" | | | X | 150 | 172 | | 129 | | | | | |
| 206+03 "PR" | 206+20 "PR" | | | X | 17 | | | 19.5 | | 14.6 | | | |
| 222+25 "PR" | 227+25 "PR" | | | X | 400 | 344 | | 458.7 | | | | | |
| 245+75 "PR" | 248+75 "PR" | | | X | 240 | 206.4 | | 275.2 | | | | | |
| 248+75 "PR" | 249+00 "PR" | | | X | 25 | | | 20.6 | | 15.4 | | | |
| 15+25 "S-1-A" | 19+35 "S-1-A" | X | | | 410 | 318.4 | | 424.6 | | | | | |
| 22+75 "S-1-A" | 25+00 "S-1-A" | | | X | 225 | 174.8 | | 233 | | | | | |
| Sharon L. Robertson | | | | | | | | | | | | | |
| 199+50 "PR" | 201+00 "PR" | | | X | 150(±) | | | | | | | | 66 |
| John Davis et al. | | | | | | | | | | | | | |
| 201+00 "PR" | 205+38 "PR" | | | X | 438(±) | | | | | | | | 1909.6 |
| Mark E. & Tina E. Sexton | | | | | | | | | | | | | |
| 199+50 "PR" | 201+00 "PR" | X | | | 365(±) | | | | | | | | 993.6 |
| Robert E. Lake | | | | | | | | | | | | | |
| 209+34 "PR" | 211+39 "PR" | | | X | 205(±) | | | | | | | | 369.8 |
| Karl & Leslie Semprsrott | | | | | | | | | | | | | |
| 211+80 "PR" | 213+50 "PR" | X | | | 170(±) | | | | | | | | 181.3 |
| Anton W. & Victoria Neff | | | | | | | | | | | | | |
| 213+50 "PR" | 215+20 "PR" | X | | | 170(±) | | | | | | | | 207.2 |
| Jarold L. Franklin | | | | | | | | | | | | | |
| 215+20 "PR" | 216+17 "PR" | X | | | 97(±) | | | | | | | | 124 |
| The Trustees of The Chambersville Cemetery Association | | | | | | | | | | | | | |
| 222+50 "PR" | 224+50 "PR" | X | | | 200(±) | | | | | | | | 406 |
| 22+00 "S-1-A" | 24+15 "S-1-A" | X | | | 215(±) | | | | | | | | 217.3 |
| 209+32 "PR" | 211+32 "PR" | X | | | 200(±) | | | | | | | | 698.5 |
| SUB-TOTALS = | | | | | —— | 1777.9 | | 2151.3 | —— | 35.9 | —— | 5890.8 | —— |
| TOTALS = | | | | | —— | 2993.5 | —— | 3711.9 | —— | 65.9 | —— | 6454.2 | 5173.3 |

## PAVED SIDE DITCH AND SODDING SUMMARY TABLE

| LOCATION: FROM STATION | TO STATION | LEFT | MEDIAN | RIGHT | ACTUAL LENGTH OF PAVED V DITCH | PAVED SIDE V DITCH(Tons): REVETMENT RIPRAP (18 in. Deep) | TYPE | | GEOTEXTILES | CUT OF WALL | LUG | 3 FT. BOTTOM DITCH TO EXISTING | SODDING: FOR DITCHES | TOTAL SODDING | NURSERY SODDING FOR LAWNS |
|---|---|---|---|---|---|---|---|---|---|---|---|---|---|---|---|
| | | | | | Feet | Tons | Each | | Sys. | ft | ft | Tons | Sys. | Sys. | Sys. |
| 0+00.00 "S2" | 0+93.93 "S2" | X | | | 109.93 | – | A | | – | 8 | 8 | | 27.8 | 27.8 | |
| 217+56.49 "PR" | 218+36.0 "PR" | X | | | 84.17 | 7 | A | | 9 | 8 | 8 | | 20.1 | 20.1 | |
| SUB-TOTALS = | | | | | —— | —— | —— | | —— | —— | | | —— | —— | —— |
| TOTALS = | | X | | | 194.1 | 7 | A | | 9 | 16 | 16 | | 47.9 | 47.9 | —— |


ASA Engineering Consultants, Inc.
3717 Woodview Trace
Indianapolis, Indiana 46268
(317) 334-1334


ALI SALEEM ABUFARES REGISTERED No. 870062 STATE OF INDIANA PROFESSIONAL ENGINEER

RECOMMENDED FOR APPROVAL — DESIGN ENGINEER — October 11, 2011 DATE

DESIGNED JimB DRAWN JimB
CHECKED AAC CHECKED JTK

INDIANA DEPARTMENT OF TRANSPORTATION

ROAD SUMMARY OF QUANTITIES

| HORIZONTAL SCALE | BRIDGE FILE |
|---|---|
| As Noted | |
| VERTICAL SCALE | DESIGNATION |
| As Noted | 9467555 |
| SURVEY BOOK | SHEETS |
| | 28 of 59 |
| CONTRACT | PROJECT NO. |
| 24382 | MWP-5000 (00C) |

## SIGN & SIGN POST SUMMARY *

| Sign Description | SIGN CODE | LOCATION Station & Line | Lt./Rt. | No. of Posts | Post Type 1 | Total Lin. (ft.) | Post Type 2 | Total Lin. (ft.) | Sign Area sft. | Sign Area sft. | Remove Sign | New Sign | Sign Thickness | Gage Steel | Sign Remounting |
|---|---|---|---|---|---|---|---|---|---|---|---|---|---|---|---|
| Stop Sign | R1-1 | 206+08.39 "PR" | Rt. | 1 | X | 8 | | | 6.25 | | X | X | 0.080 | 18 | |
| Stop Sign | R1-1 | 209+31.9 "PR" | Rt. | 1 | X | 8 | | | 6.25 | | X | X | 0.080 | 18 | |
| Stop Sign | R1-1 | 208+86.6 "PR" | Lt. | 1 | X | 8 | | | 6.25 | | X | X | 0.080 | 18 | |
| Stop Sign | R1-1 | 224+48.8 "PR" | Lt. | 1 | X | 8 | | | 6.25 | | X | X | 0.080 | 18 | |
| Stop Sign | R1-1 | 224+93.8 "PR" | Lt. | 1 | X | 8 | | | 6.25 | | X | X | 0.080 | 18 | |
| Stop Sign | R1-1 | 239+70 "PR" | Lt. | 1 | X | 8 | | | 6.25 | | X | X | 0.080 | 18 | |
| No Passing Zone | W14-3 | 208+13.2 "PR" | Rt. | 1 | X | 10 | | | 4.2 | | X | X | 0.080 | 18 | |
| No Passing Zone | W14-3 | 209+26.4 "PR" | Lt. | 1 | X | 10 | | | 4.2 | | X | X | 0.080 | 18 | |
| Speed Limit 45 MPH | R2-1 | 24+64 "S-1-A" | Rt. | 1 | X | 10 | | | 5 | | X | X | 0.080 | 18 | |
| WEST | M3-4(S) | | | | | | | | 4 | | | X | 0.080 | 18 | |
| Indiana 46 | M1-16 | 223+36.5 "PR" | Lt. | 1 | X | 10.5 | | | 2 | | X | X | 0.080 | 18 | |
| EAST | M3-2(S) | | | | | | | | 4 | | | X | 0.080 | 18 | |
| Indiana 46 | M1-16 | 226+16.7 "PR" | Rt. | 1 | X | 10.5 | | | 2 | | X | X | 0.080 | 18 | |
| Sunnyside Ln | D-3 | 209+37.5 "PR" | Rt. | 1 | X | 8.5 | | | 3.3 | | X | X | 0.080 | 18 | |
| Co Line RD | D-3 | 224+60.8 "PR" | Rt. | 1 | X | 8.5 | | | 3 | | X | X | 0.080 | 18 | |
| SR 46 | D-3 | — | | — | — | — | | | 1.8 | | | X | 0.080 | 18 | |
| Intersection Sign | W2-1 | 215+62.7 "PR" | Lt. | 2 | | | X | 21 | | 16 | X | X | 0.100 | 16 | |
| Intersection Sign | W2-1 | 215+64.56 "PR" | Rt. | 2 | | | X | 21 | | 16 | X | X | 0.100 | 16 | |
| County Line RD | W16-8 | 215+64.56 "PR" | Rt. | — | | | — | — | | 2.7 | X | X | 0.100 | 16 | |
| Destination Sign | D2-3 | 218+86.67 "PR" | Rt. | 2 | | | X | 24 | | | X | | | | X |
| Destination Sign | D1-2 D1-1a | 233+01.3 "PR" | Lt. | 2 | | | X | 22 | | | X | | | | X |
| Information Sign | | 228+90.5 "PR" | Rt. | 1 | X | 8.5 | | | | | X | | | | X |
| Information Sign | | 224+09.3 "PR" | Rt. | 1 | X | 9 | | | | | X | | | | X |
| High Water Sign | Warning Sign | 23+10 "S-1-A" | Rt. | 1 | | | X | 6.5 | | | X | | | | X |
| 42 | Mile Marker | 204+47.06 "PR" | Rt. | 1 | X | 5.5 | | | | | X | | | | X |
| Church Sign | | 234+31 "PR" | Rt. | 1 | X | 8.5 | | | | | X | | | | X |
| Weight Limits | R12-1 | 18+00 "S-1-A" | Lt. | 1 | X | 10 | | | 5 | | X | X | 0.080 | 18 | |
| Totals = | Sign Post, Square Type 1, Reinf. Anchor Base = | | | | | 157.5 ft. | | | | | 24 ea. | 20 | | | 7 ea. |
| | Sign Post, Square Type 2, Reinf. Anchor Base = | | | | | | | 94.5 ft. | | | | | | | |
| Sign, Sheet, Encapsulated Lens w/ Legend 0.080 in. Thickness = | | | | | | | | | 76 sft. | | | | 0.080 | 18 | |
| Sign, Sheet, Encapsulated Lens w/ Legend 0.100 in. Thickness = | | | | | | | | | | 34.7 sft. | | | 0.100 | 16 | |

## SIGN & SIGN POST SUMMARY

| Sign Description | SIGN CODE | LOCATION Station & Line | Lt./Rt. | No. of Posts | Metal | Wood | Remove Sign |
|---|---|---|---|---|---|---|---|
| Delineator | D-3 | 200+96.1 "PR" | Rt. | 1 | X | | X |
| Delineator | D-3 | 201+58.4 "PR" | Rt. | 1 | X | | X |
| Delineator | D-3 | 202+17.2 "PR" | Rt. | 1 | X | | X |
| Delineator | D-3 | 203+35.49 "PR" | Rt. | 1 | X | | X |
| Delineator | D-3 | 204+54.58 "PR" | Rt. | 1 | X | | X |
| Delineator | D-3 | 205+68.79 "PR" | Rt. | 1 | X | | X |
| Delineator | D-1 | 209+14.9 "PR" | Lt. | 1 | X | | X |
| Delineator | D-1 | 224+45.7 "PR" | Lt. | 1 | X | | X |
| Delineator | D-1 | 224+49.1 "PR" | Lt. | 1 | X | | X |
| Delineator | D-1 | 224+90.5 "PR" | Lt. | 1 | X | | X |
| Delineator | D-1 | 224+94.2 "PR" | Lt. | 1 | X | | X |
| Delineator | D-1 | 230+08 "PR" | Lt. | 1 | X | | X |
| Delineator | D-1 | 243+62.7 "PR" | Rt. | 1 | X | | X |
| Delineator | D-1 | 243+70.5 "PR" | Lt. | 1 | X | | X |
| Advertisement Sign | Heritage Hills | 208+71.5 "PR" | Lt. | 2 | | X | X |
| Advertisement Sign | People's Mortage | 205+15 "PR" | Rt. | 7 | | X | X |
| Advertisement Sign | Real Estate | 209+34.6 "PR" | Rt. | 1 | X | | X |
| Advertisement Sign | Lakes Auto Sales | 209+96.7 "PR" | Rt. | 1 | X | | X |
| Advertisement Sign | BillBoard Sign | 211+30.8 "PR" | Rt. | 2 | X | | X |
| Advertisement Sign | Chambersville | 209+38 "PR" | Lt. | 2 | | X | X |
| Advertisement Sign | Cemetery | 223+33.8 "PR" | Lt. | 2 | | X | X |
| Advertisement Sign | Stone Cabin | 225+57.2 "PR" | Lt. | 2 | | X | X |
| Advertisement Sign | Used Furniture | 225+97.7 "PR" | Lt. | 2 | | X | X |
| Advertisement Sign | Apple Butter Fes. | 235+40.6 "PR" | Lt. | 2 | X | | X |
| Advertisement Sign | Co. State Bank | 235+54.3 "PR" | Lt. | 2 | X | | X |
| Advertisement Sign | Acres Realty | 239+17.2 "PR" | Lt. | 2 | X | | X |
| | | | | | | | 26 ea. |

*** NOTE:**
Sign location and post lengths are approximate. Exact location and length to be determined in the field in accordance with the Indiana Manual on Uniform Traffic Control Devices, as determined by the INDOT Traffic Engineer.

## RIGHT-OF-WAY MARKERS

| LOCATION | STATION | OFFSET (LT.) | OFFSET (RT.) | EACH |
|---|---|---|---|---|
| Line "PR" | 199+50 | 40.05 ft. ℄(12.05') | 50.91 ft.℄(11.95') | 2 |
| Line "PR" | 200+00 | — | 40.39 ft. | 1 |
| Line "PR" | 200+50 | 40.05 ft. | — | 1 |
| Line "PR" | 201+00 | 65 ft. | 60 ft. | 2 |
| Line "PR" | 203+50 | — | 100 ft. | 1 |
| Line "PR" | 204+75 | — | 100 ft. | 1 |
| Line "PR" | 204+99.73 | — | 170 ft. | 1 |
| Line "PR" | 205+44.4 | — | 192.46 ft. | 1 |
| Line "PR" | 205+79.82 | — | 122 ft. | 1 |
| Line "PR" | 206+20 | — | 122 ft. | 1 |
| Line "PR" | 206+50 | — | 75 ft. | 1 |
| Line "PR" | 206+70 | 66 ft. – 90 ft. | — | 2 |
| Line "PR" | 207+10 | 65 ft. – 90 ft. | — | 2 |
| Line "PR" | 208+25 | — | 75 ft. | 1 |
| Line "PR" | 208+38.14 | ℄ (65 ft.) | — | 1 |
| Line "PR" | 208+92.25 | — | ℄ (95 ft.) | 1 |
| Line "PR" | 209+13.74 | ℄ (95 ft.) | — | 1 |
| Line "PR" | 209+30 | 71 ft. | — | 1 |
| Line "PR" | 209+41.38 | — | ℄ (60 ft.) | 1 |
| Line "PR" | 209+42.25 | — | ℄ (95 ft.) | 1 |
| Line "PR" | PC. 212+93.56 | 80 ft. | 60 ft. | 2 |
| Line "PR" | 214+00 | 80 ft. | — | 1 |
| Line "PR" | 214+65 | 70 ft. | — | 1 |
| Line "PR" | 216+49.16 | 63.39 ft. | — | 1 |
| Line "PR" | 217+95 | 79.15 ft. | — | 1 |
| Line "PR" | 215+50 | — | 60 ft. | 1 |
| Line "PR" | 219+00 | — | 80 ft. | 1 |
| Line "PR" | 224+30 | — | 75 ft. | 1 |
| Line "PR" | 225+30 | 90 ft. | — | 1 |
| Line "PR" | 225+60 | — | 75 ft. | 1 |
| Line "PR" | 226+25 | 80 ft. | — | 1 |
| Line "PR" | PC. 228+22.83 | 80 ft. | 75 ft. | 2 |
| Line "PR" | 229+90 | 80 ft. – 95 ft. | — | 2 |
| Line "PR" | 230+25 | 75 ft. – 95 ft. | — | 2 |
| Line "PR" | 231+00 | — | 65 ft. | 1 |
| Line "PR" | 232+00 | 60 ft. | — | 1 |
| Line "PR" | 233+00 | — | 60 ft. | 1 |
| Line "PR" | 235+00 | 60 ft. | — | 1 |
| Line "PR" | 236+50 | 80 ft. | — | 1 |
| Line "PR" | 240+30 | 80 ft. | — | 1 |
| Line "PR" | 240+50 | 95 ft. | — | 1 |
| Line "PR" | 241+00 | 112 ft. | — | 1 |
| Line "PR" | 241+15 | 71 ft. | — | 1 |
| Line "PR" | 242+32 | 65 ft. | — | 1 |
| Line "PR" | 243+50 | 65 ft. – 75 ft. | 60 ft. – 75 ft. | 4 |
| Line "PR" | 243+85 | 65 ft. – 75 ft. | 60 ft. – 75 ft. | 4 |
| Line "PR" | PT. 245+59.43 | 60 ft. | 60 ft. | 2 |
| Line "PR" | 248+00 | 60 ft. | 55 ft. | 2 |
| Line "PR" | 249+00 | 30 ft. | 30 ft. | 2 |
| Line "PR" | 250+20 | 20 ft. ℄(13.74') | 20 ft. ℄(10.26') | 2 |
| Line "S-1-A" | 12+00 | 25 ft. ℄(8.22') | 25 ft. ℄(7.78') | 2 |
| Line "S-1-A" | 13+00 | 48 ft. | 42 ft. | 2 |
| Line "S-1-A" | 17+00 | — | 47 ft. | 1 |
| Line "S-1-A" | 21+08.7 | 128.2 ft. | — | 1 |
| Line "S-1-A" | 21+53.47 | 31.27 ft. | — | 1 |
| Line "S-1-A" | 26+00 | 31.27 ft. ℄(11.92') | 32 ft. ℄(18.08') | 2 |
| | Totals = | | | 77 Each |

## UNDERDRAIN TABLE

| Underdrain Pipe Limits Stations | (L/R) | UNDERDRAIN PIPE: Type 4 Pipe 4 Inch Feet | 6 Inch Feet | End Cap Req'd. Each | Geotextile For Underdrains Sft. | Aggregate For Underdrains Cys. | HMA For Underdrains Tons | Special Grade % | Flow Line Elev. @ Underdrain Pipe Limit | Outlet Pipe Required (Y/N) | Connect Underdrain Pipe to Str. # | Structure Invert Elevation | OUTLET PIPE: Elbow Connector Required | 45 Degree Elbows Required (1 or 4) | 6 Inch Twin Outlet Pipe Feet | Outlet Station | Outlet Elevation | Outlet @ Outlet Protector No. | Ditch Flow Line Elev. @ Outlet Protector | Slope of Outlet % | Connect Outlet Pipe to Str. No. # | Str. Invert Elevation | Structure Backfill, Type 1 Cys. | HMA For Underdrains Tons | OUTLET PROTECTORS: Outlet Protector Type 1 | Outlet Protector Type 2 | Outlet Protector Type 3 | Outside Left | Median Left | Median Right | Outside Right |
|---|---|---|---|---|---|---|---|---|---|---|---|---|---|---|---|---|---|---|---|---|---|---|---|---|---|---|---|---|---|---|---|---|
| 201+00 | Left | | | 1 | | | | | | | | | | | — | 201+00 | 795.73 | | — | — | | | | | | | | | | | | |
| 201+00 to 207+50 | Left | | 650 | | 445.4 | 51.5 | | | | (Y) | 1 | | 2 | 4 | 16-16 | 207+50 | 769.923 | 1 | 769.123 | 5 | | | 1.2 | | 1 | | | X | | | |
| 207+50 to 214+00 | Left | | 650 | | 445.4 | 51.5 | | | | (Y) | 2 | | 2 | 4 | 18-18 | 214+00 | 777.091 | 2 | 776.551 | 3 | | | 0.7 | | 1 | | | X | | | |
| 214+00 to 219+99.5 | Left | | 599.5 | 1 | 411.1 | 47.6 | | | | | | | | | | 219+99.5 | 781.587 | | — | — | | | | | | | | | | | | |
| 220+00.5 | Left | | | 1 | | | | | | | | | | | — | 220+00.5 | 781.587 | | — | — | | | | | | | | | | | | |
| 220+00.5 to 222+00 | Left | | 199.5 | | 137 | 15.9 | | | | (Y) | 3 | | 2 | 4 | 16-16 | 222+00 | 777.774 | 3 | 777.294 | 3 | | | 0.7 | | 1 | | | X | | | |
| 222+00 to 224+00 | Left | | 200 | | 137 | 15.9 | | | | (Y) | 4 | | 2 | 4 | 16-16 | 224+00 | 771.212 | 4 | 770.732 | 3 | | | 0.7 | | 1 | | | X | | | |
| 224+00 to 230+00 | Left | | 600 | | 411.1 | 47.6 | | | | (Y) | 5 | | 2 | 4 | 20-20 | 230+00 | 751.525 | 5 | 750.925 | 3 | | | 1.2 | | 1 | | | X | | | |
| 230+00 to 236+00 | Left | | 600 | | 411.1 | 47.6 | | | | (Y) | 6 | | 2 | 4 | 16-16 | 236+00 | 757.065 | 6 | 756.585 | 3 | | | 0.7 | | 1 | | | X | | | |
| 236+00 to 242+35 | Left | | 635 | | 435.1 | 50.3 | | | | (Y) | 7 | | 2 | 4 | 20-20 | 242+35 | 768.815 | 7 | 768.215 | 3 | | | 0.7 | | 1 | | | X | | | |
| 242+35 to 248+00 | Left | | 565 | | 387.1 | 44.8 | | | | (Y) | 8 | | 2 | 4 | 16-16 | 248+00 | 776.302 | 8 | 775.822 | 3 | | | 0.7 | | 1 | | | X | | | |
| 248+00 to 249+00 | Left | | 100 | 1 | 68.5 | 7.9 | | | | (Y) | | | | | — | 248+00 | 778.77 | | — | — | | | | | | | | | | | | |
| 201+00 | Right | | | 1 | | | | | | | | | | | — | 201+00 | 795.730 | | — | — | | | | | | | | | | | | |
| 201+00 to 207+50 | Right | | 650 | | 445.4 | 51.5 | | | | (Y) | 9 | | 2 | 4 | 16-16 | 207+50 | 769.923 | 9 | 769.123 | 5 | | | 1.2 | | 1 | | | | | | X |
| 207+50 to 214+00 | Right | | 650 | | 445.4 | 51.5 | | | | (Y) | 10 | | 2 | 4 | 17-17 | 214+00 | 776.580 | 10 | 776.070 | 3 | | | 0.7 | | 1 | | | | | | X |
| 214+00 to 219+99.5 | Right | | 599.5 | 1 | 411.1 | 47.6 | | | | (Y) | 11 | | | | — | 219+99.5 | 781.587 | 11 | — | — | | | | | | | | | | | | |
| 220+00.5 | Right | | | 1 | | | | | | | | | | | — | 220+00.5 | 781.587 | | — | — | | | | | | | | | | | | |
| 220+00.5 to 222+00 | Right | | 199.5 | | 137 | 15.9 | | | | (Y) | 12 | | 2 | 4 | 16-16 | 222+00 | 777.774 | 12 | 777.294 | 3 | | | 0.7 | | 1 | | | | | | X |
| 222+00 to 224+00 | Right | | 200 | | 137 | 15.9 | | | | (Y) | 13 | | 2 | 4 | 16-16 | 224+00 | 771.212 | 13 | 771.732 | 3 | | | 0.7 | | 1 | | | | | | X |
| 224+00 to 230+00 | Right | | 600 | | 411.1 | 47.6 | | | | (Y) | 14 | | 2 | 4 | 18-18 | 230+00 | 749.312 | 14 | 748.772 | 3 | | | 1.2 | | 1 | | | | | | X |
| 230+00 to 236+00 | Right | | 600 | | 411.1 | 47.6 | | | | (Y) | 15 | | 2 | 4 | 15-15 | 236+00 | 755.525 | 15 | 755.075 | 3 | | | 0.7 | | 1 | | | | | | X |
| 236+00 to 242+00 | Right | | 600 | | 411.1 | 47.6 | | | | (Y) | 16 | | 2 | 4 | 15-15 | 242+00 | 767.275 | 16 | 766.825 | 3 | | | 0.7 | | 1 | | | | | | X |
| 242+00 to 248+00 | Right | | 600 | | 411.1 | 47.6 | | | | (Y) | 17 | | 2 | 4 | 15-15 | 248+00 | 776.302 | 17 | 775.852 | 3 | | | 0.7 | | 1 | | | | | | X |
| 248+00 to 249+00 | Right | | 100 | 1 | 68.5 | 7.9 | | | | (Y) | | | | | — | 248+00 | 778.770 | | — | — | | | | | | | | | | | | |
| TOTALS = | | | 9598 | 8 | 6577.6 | 761.3 | | | | | | | 32 | 64 | 532 | | | | | | | | 13.2 | | 16 | | | | | | |

Pipe, Type 4, Circular, 6 inch = 9598 Lft.

Aggregate for Underdrains = 761.3 Cys.

Bends, 64 x 2 = 128
Connectors, 32 x 1 = 32
532
692 ft.

Pipe, Underdrain Outlet 6 inch = 692 Lft.

## REVISIONS

| DATE | ITEM |
|---|---|
| | |
| | |
| | |


ASA Engineering Consultants, Inc.
3717 Woodview Trace
Indianapolis, Indiana 46268
(317) 334-1334


ALI SALEEM ABUFARES REGISTERED No. 870062 STATE OF INDIANA PROFESSIONAL ENGINEER

RECOMMENDED FOR APPROVAL — DESIGN ENGINEER — October 11, 2011 DATE

DESIGNED JimB DRAWN JimB
CHECKED ASA CHECKED JTK

INDIANA DEPARTMENT OF TRANSPORTATION

ROAD SUMMARY OF QUANTITIES

| HORIZONTAL SCALE | BRIDGE FILE |
|---|---|
| As Noted | |
| VERTICAL SCALE | DESIGNATION |
| As Noted | 9467555 |
| SURVEY BOOK | SHEETS |
| | 29 of 59 |
| CONTRACT | PROJECT NO. |
| 24382 | MWP-5000 (00C) |

# TEMPORARY EROSION & SEDIMENT CONTROL

## TEMPORARY CHECK DAM, REVETMENT RIPRAP

| LOCATION | STATION | LENGTH (ft.) | SPACING (ft.) | GEOTEXTILES (sys.) | COARSE AGGREGATE #5 | CHECKS Each |
|---|---|---|---|---|---|---|
| | (4 ft. Bottom Ditch) | | | | | |
| Line"PR" Lt. | 200+00 to 205+00 | 500 | 30 | 1122 | 79.9 | 17 |
| Line"PR" Lt. | 205+00 to 205+50 | 50 | 40 | 66 | 4.7 | 1 |
| Line"PR" Lt. | 205+50 to 206+80 | 130 | 70 | 132 | 9.4 | 2 |
| Line"PR" Lt. | 206+95 to 208+50 | 155 | 100 | 132 | 9.4 | 2 |
| Line"PR" Lt. | 211+80 to 214+05 | 225 | 50 | 330 | 23.5 | 5 |
| Line"PR" Lt. | 222+75 to 224+50 | 175 | 50 | 264 | 18.8 | 4 |
| Line"PR" Lt. | 225+20 to 227+75 | 255 | 50 | 330 | 23.5 | 5 |
| Line"PR" Rt. | 200+00 to 203+00 | 300 | 30 | 660 | 47 | 10 |
| Line"PR" Rt. | 203+00 to 204+50 | 150 | 30 | 330 | 23.5 | 5 |
| Line"PR" Rt. | 204+50 to 205+25 | 75 | 70 | 66 | 4.7 | 1 |
| Line"PR" Rt. | 207+16 to 208+75 | 159 | 135 | 66 | 4.7 | 1 |
| Line"PR" Rt. | 209+45 to 210+20 | 75 | 50 | 132 | 9.4 | 2 |
| Line"PR" Rt. | 213+00 to 214+25 | 125 | 50 | 198 | 14.1 | 3 |
| Line"PR" Rt. | 222+75 to 224+25 | 170 | 40 | 264 | 18.8 | 4 |
| Line"PR" Rt. | 225+40 to 227+25 | 185 | 35 | 330 | 23.5 | 5 |
| Line"PR" Rt. | 245+75 to 248+10 | 235 | 40 | 396 | 28.2 | 6 |
| Line"PR" Rt. | 248+75 to 249+00 | 25 | 40 | 66 | 4.7 | 1 |
| | Sub-Totals= | | | 4884 sys. | 347.8 cys. | 74 ea. |
| | | | | | | |
| | | | | Riprap, 74 ea. (11 Tons) = 814 T. | | |
| | | Coarse Aggr. #5, 347.8 cys. (2 Tons) = 695.6 T. | | | | |
| | | | | | | |
| Line | (3 ft. Bottom Ditch) | | | | | |
| "S-1-A" Lt. | 15+25 to 19+35 | 410 | 50 | 528 | 32 | 8 |
| "S-1-A" Rt. | 20+65 to 23+00 | 235 | 70 | 264 | 16 | 4 |
| "S-1-A" Rt. | 23+00 to 25+00 | 200 | 50 | 264 | 16 | 4 |
| | Sub-Totals= | | | 1056 sys. | 64 cys. | 16 ea. |
| | | | | | | |
| | | | | Riprap, 16 ea. (10.5 Tons) = 168 T. | | |
| | | Coarse Aggr. #5, 64 cys. (2 Tons) = 128 T. | | | | |
| | | | | | | |
| | Maintenance of Traffic I & II | | | | | |
| | (V Ditch Lt.) | | | | | |
| Line "PR" | 200+50 to 204+50 | 400 | 30 | 616 | 6.2 | 14 |
| Line "PR" | 204+50 to 206+00 | 150 | 40 | 176 | 1.8 | 4 |
| Line "PR" | 206+00 to 207+00 | 100 | 70 | 88 | 0.9 | 2 |
| Line "PR" | 235+00 to 239+20 | 420 | 50 | 352 | 3.5 | 8 |
| Line "PR" | 246+00 to 249+00 | 300 | 50 | 264 | 2.6 | 6 |
| Line "PR" | 210+00 to 216+00 | 600 | 50 | 528 | 5.3 | 12 |
| | Sub-Totals= | | | 2024 sys. | 20.3 cys. | 46 ea. |
| | | | | | | |
| | | | | Riprap, 46 ea. (6 Tons) = 276 T. | | |
| | | Coarse Aggr. #5, 20.3 cys. (2 Tons) = 40.6 T. | | | | |
| | | | | | | |
| | | | | | | |
| | | | | | | |
| | | TOTALS | | | | |
| | | | | | | |
| | | | | 7964 sys. | 864.2 T. | 1258 T. |
| | | | | | | |
| | | | | | | |

## TEMPORARY CHECK DAM, STRAW BALES

| LOCATION | STATION | LENGTH (ft.) | SPACING (ft.) | CHECKS Each |
|---|---|---|---|---|
| | | | | |
| | (4 ft. Bottom Ditch) | | | |
| Line"PR" Lt. | 209+40 to 211+10 | 170 | 120 | 2 |
| Line"PR" Lt. | 215+65 to 217+50 | 185 | 400 | 1 |
| Line"PR" Lt. | 218+30 to 222+75 | 445 | 120 | 4 |
| Line"PR" Lt. | 227+75 to 229+93 | 218 | 70 | 3 |
| Line"PR" Lt. | 230+18 to 239+40 | 922 | 135 | 7 |
| Line"PR" Lt. | 240+95 to 243+60 | 265 | 400 | 1 |
| Line"PR" Lt. | 243+85 to 249+00 | 515 | 170 | 3 |
| Line"PR" Rt. | 210+75 to 213+00 | 225 | 100 | 2 |
| Line"PR" Rt. | 214+25 to 219+60 | 535 | 100 | 5 |
| Line"PR" Rt. | 220+50 to 222+75 | 225 | 120 | 2 |
| Line"PR" Rt. | 227+25 to 229+93 | 268 | 400 | 1 |
| Line"PR" Rt. | 230+15 to 233+50 | 335 | 400 | 1 |
| Line"PR" Rt. | 233+50 to 240+10 | 660 | 70 | 10 |
| Line"PR" Rt. | 240+70 to 243+60 | 290 | 170 | 2 |
| Line"PR" Rt. | 243+75 to 245+75 | 200 | 100 | 2 |
| | | | | |
| | Sub-Totals= | | | 46 ea. |
| | | | | |
| | 46 Checks (39 Lft.) = 1794 Lft. | | | |
| | | | | |
| Line | (3 ft. Bottom Ditch) | | | |
| "S-1-A" Lt. | 13+00 to 15+25 | 225 | 100 | 2 |
| "S-1-A" Lt. | 20+80 to 21+60 | 80 | 120 | 1 |
| "S-1-A" Rt. | 13+00 to 19+35 | 635 | 100 | 6 |
| | | | | |
| | Sub-Totals= | | | 9 ea. |
| | | | | |
| | 9 Checks (39 Lft.) = 351 Lft. | | | |
| | | | | |
| | Maintenance of Traffic I & II | | | |
| | (V Ditch Lt.) | | | |
| Line "PR" | 207+05 to 210+00 | 295 | 120 | 3 |
| Line "PR" | 216+00 to 219+00 | 300 | 400 | 1 |
| Line "PR" | 230+50 to 235+00 | 450 | 135 | 3 |
| Line "PR" | 239+75 to 243+50 | 375 | 400 | 1 |
| Line "PR" | 243+67 to 246+00 | 233 | 135 | 2 |
| | | | | |
| | Sub-Totals= | | | 10 ea. |
| | | | | |
| | 10 Checks (27 Lft.) = 270 Lft. | | | |
| | | | | |
| | | | | |
| | | | | |
| | TOTALS | | | |
| | 1794' + 351' + 270' = 2415 Lft. | | | |
| | | | | |
| | | | | |

## TEMPORARY SILT FENCE

| LOCATION | STATION | LT./RT. | LENGTH (ft.) |
|---|---|---|---|
| Line"PR" Lt. | 199+00 to 200+00 | Lt. | 100 |
| Line"PR" Rt. | 199+00 to 200+00 | Rt. | 100 |
| Line"PR" Rt. | 205+80 to 208+97 | Rt. | 425 |
| Line"PR" Lt. | 225+00 to 235+00 | Lt. | 1000 |
| Line"PR" Rt. | 225+00 to 235+00 | Rt. | 1000 |
| Line"PR" Lt. | 249+00 to 250+00 | Lt. | 100 |
| Line"PR" Rt. | 248+00 to 250+00 | Rt. | 200 |
| | | | |
| | | | 2925 |
| | | | |
| | | | |
| Line | | | |
| "S-1-A" | 12+00 to 13+00 | Lt. | 100 |
| "S-1-A" | 22+25 to 26+00 | Lt. | 375 |
| "S-1-A" | 12+00 to 13+00 | Rt. | 100 |
| "S-1-A" | 25+00 to 26+00 | Rt. | 100 |
| | | | |
| | | | 675 |
| | | | |
| | | | |
| | | | |
| | | | |
| | Hedrick Road | Rt. | 140 |
| | Hedrick Road | Lt. | 220 |
| | | | |
| | | | 360 |
| | | | |
| | | | |
| | | | |
| TOTALS | | | |
| 2925 + 675' + 360' = 3960 ft. | | | |
| | | | |
| | | | |

## TEMPORARY DITCH INLET PROTECTION

| LOCATION | STATION | DESCRIPTION | EACH |
|---|---|---|---|
| Line "S2" | 0+93.93 | Structure #9, Rt. | 1 |
| Line "S-1-A" | 22+25 | Structure #20, Lt. | 1 |
| Line "S-1-A" | 25+00 | Structure #21, Lt. | 1 |
| Line"PR" | 208+50 | Structure #26, Rt. | 1 |
| Main. of Traffic | | | |
| | | | |
| | | | 4 Each |

## REVISIONS

| DATE | ITEM |
|---|---|
| | |
| | |
| | |


ASA Engineering Consultants, Inc.
3717 Woodview Trace
Indianapolis, Indiana 46268
(317) 334-1334


ALI SALEEM ABUFARES REGISTERED No. 87062 STATE OF INDIANA PROFESSIONAL ENGINEER

RECOMMENDED FOR APPROVAL — DESIGN ENGINEER — October 11, 2011 DATE

DESIGNED JimB DRAWN JimB
CHECKED ASA CHECKED JTK

INDIANA DEPARTMENT OF TRANSPORTATION

TEMPORARY EROSION & SEDIMENT CONTROL

| HORIZONTAL SCALE | BRIDGE FILE |
|---|---|
| As Noted | |
| VERTICAL SCALE | DESIGNATION |
| As Noted | 9467555 |
| SURVEY BOOK | SHEETS |
| | 30 of 59 |
| CONTRACT | PROJECT NO. |
| 24382 | MWP-5000 (00C) |

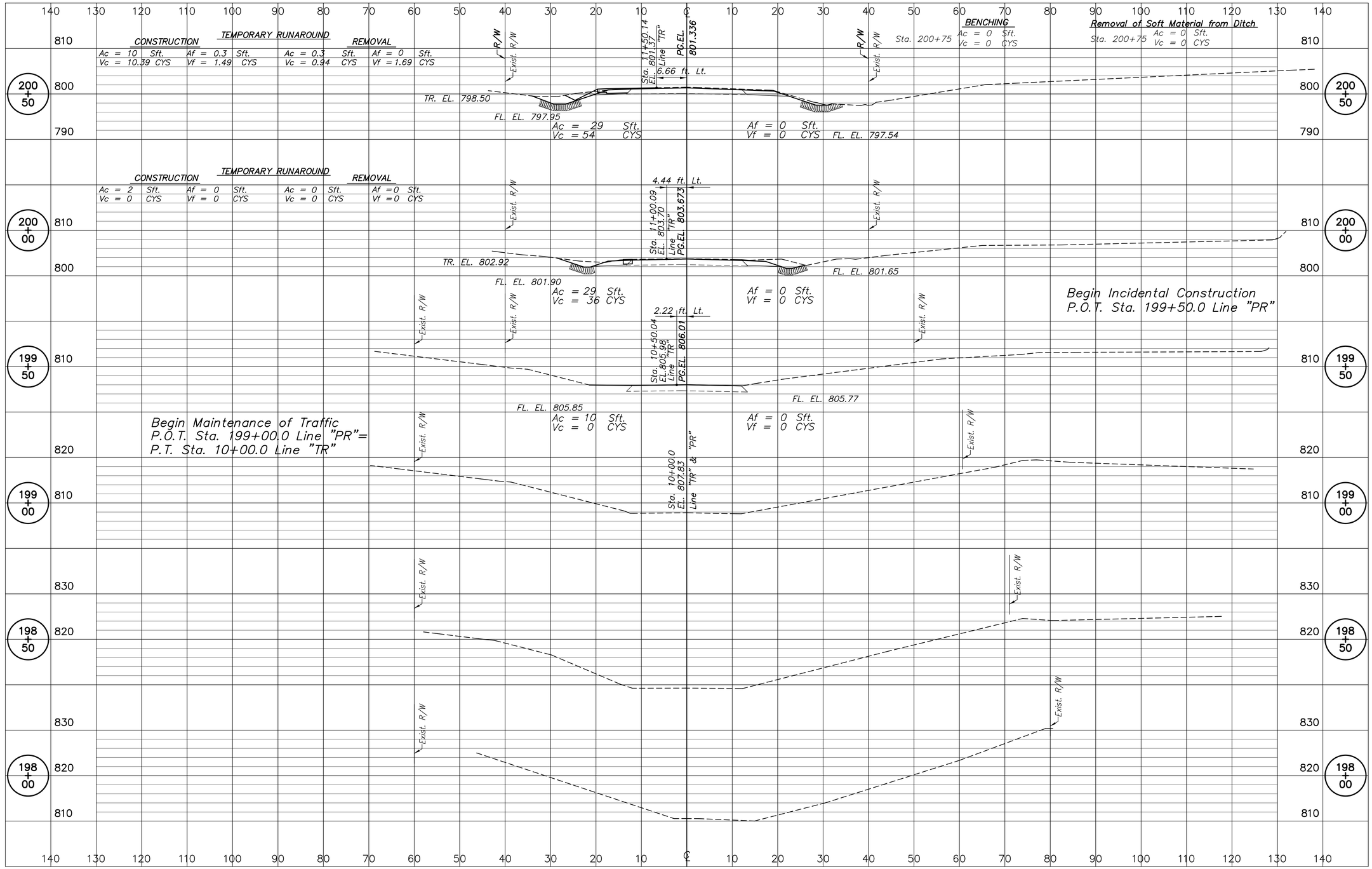


**ASA Engineering Consultants, Inc.**
3717 Woodview Trace
Indianapolis, Indiana 46268
(317) 334-1334

| | |
|---|---|
| DESIGNED ASA | DRAWN JimB |
| CHECKED AAC | CHECKED ASA |

INDIANA
DEPARTMENT OF TRANSPORTATION

ROADWAY CROSS-SECTIONS

| SCALE | BRIDGE FILE |
|---|---|
| 1" = 10'-0" | |
| LINE | DESIGNATION |
| "PR" | 9467555 |
| SURVEY BOOK | SHEETS |
| | 31 of 59 |
| CONTRACT | PROJECT NO. |
| 24382 | MWP-5000 (00C) |

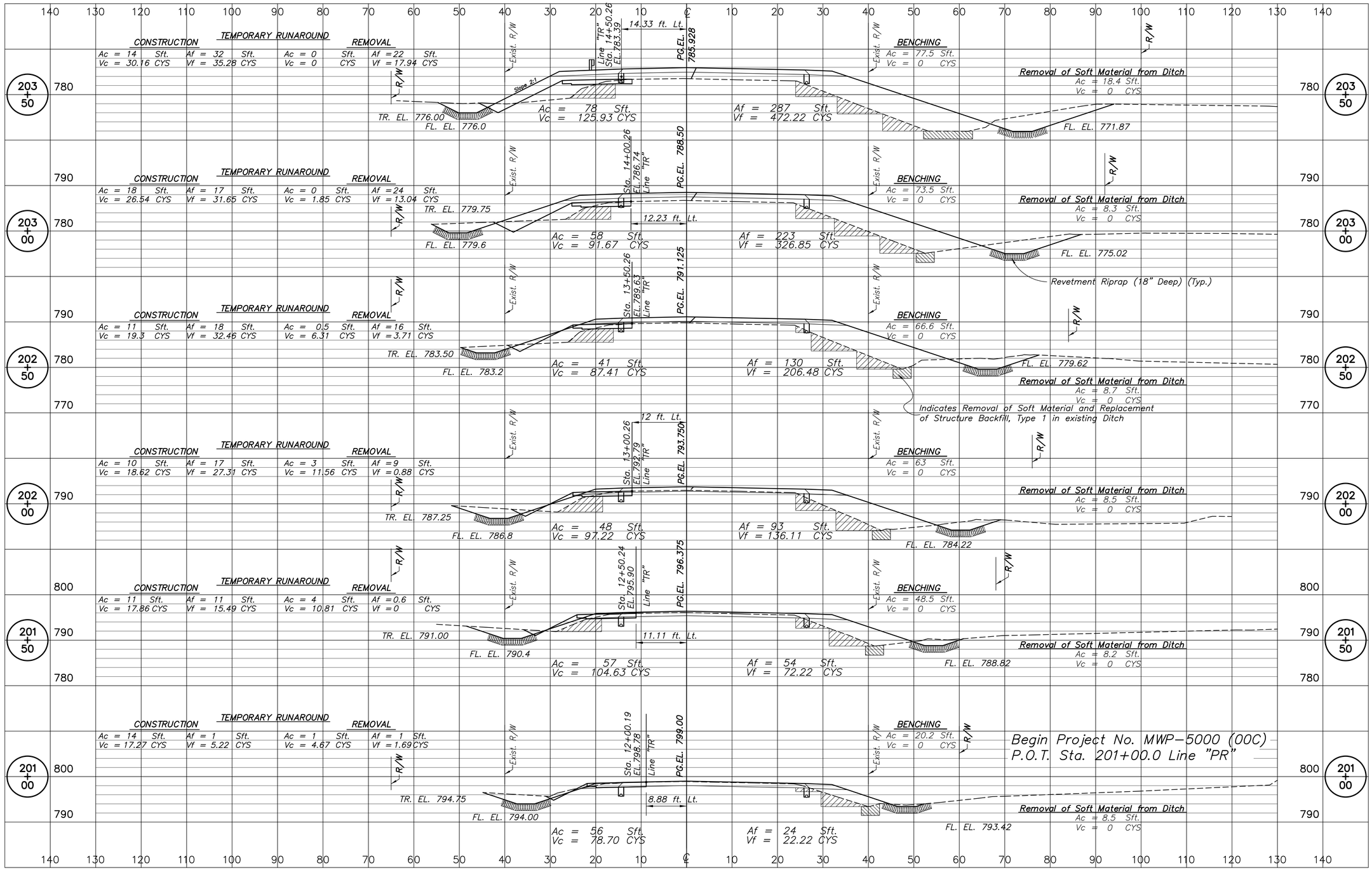



ASA Engineering Consultants, Inc.
3717 Woodview Trace
Indianapolis, Indiana 46268
(317) 334-1334


| | |
|---|---|
| DESIGNED ASA | DRAWN JimB |
| CHECKED AAC | CHECKED ASA |

INDIANA DEPARTMENT OF TRANSPORTATION

ROADWAY CROSS-SECTIONS

| SCALE | BRIDGE FILE |
|---|---|
| 1" = 10'-0" | |
| LINE | DESIGNATION |
| "PR" | 9467555 |
| SURVEY BOOK | SHEETS |
| | 32 of 59 |
| CONTRACT | PROJECT NO. |
| 24382 | MWP-5000 (00C) |

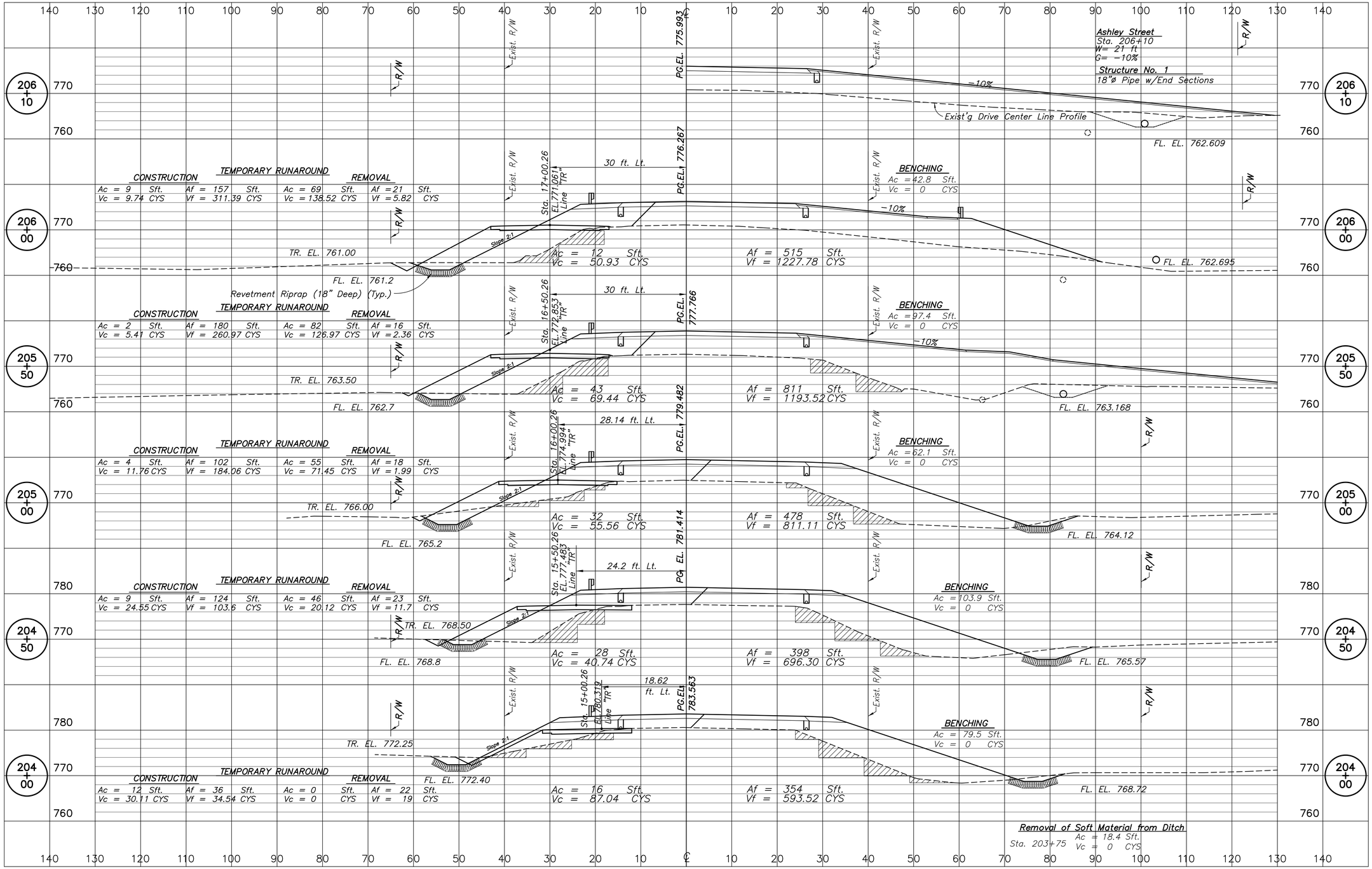


ASA Engineering Consultants, Inc.
3717 Woodview Trace
Indianapolis, Indiana 46268
(317) 334-1334

DESIGNED ASA
DRAWN JimB
CHECKED AAC
CHECKED ASA

INDIANA
DEPARTMENT OF TRANSPORTATION

ROADWAY CROSS-SECTIONS

| SCALE | BRIDGE FILE |
|---|---|
| 1" = 10'-0" | |
| LINE | DESIGNATION |
| "PR" | 9467555 |
| SURVEY BOOK | SHEETS |
| | 33 of 59 |
| CONTRACT | PROJECT NO. |
| 24382 | MWP-5000 (00C) |

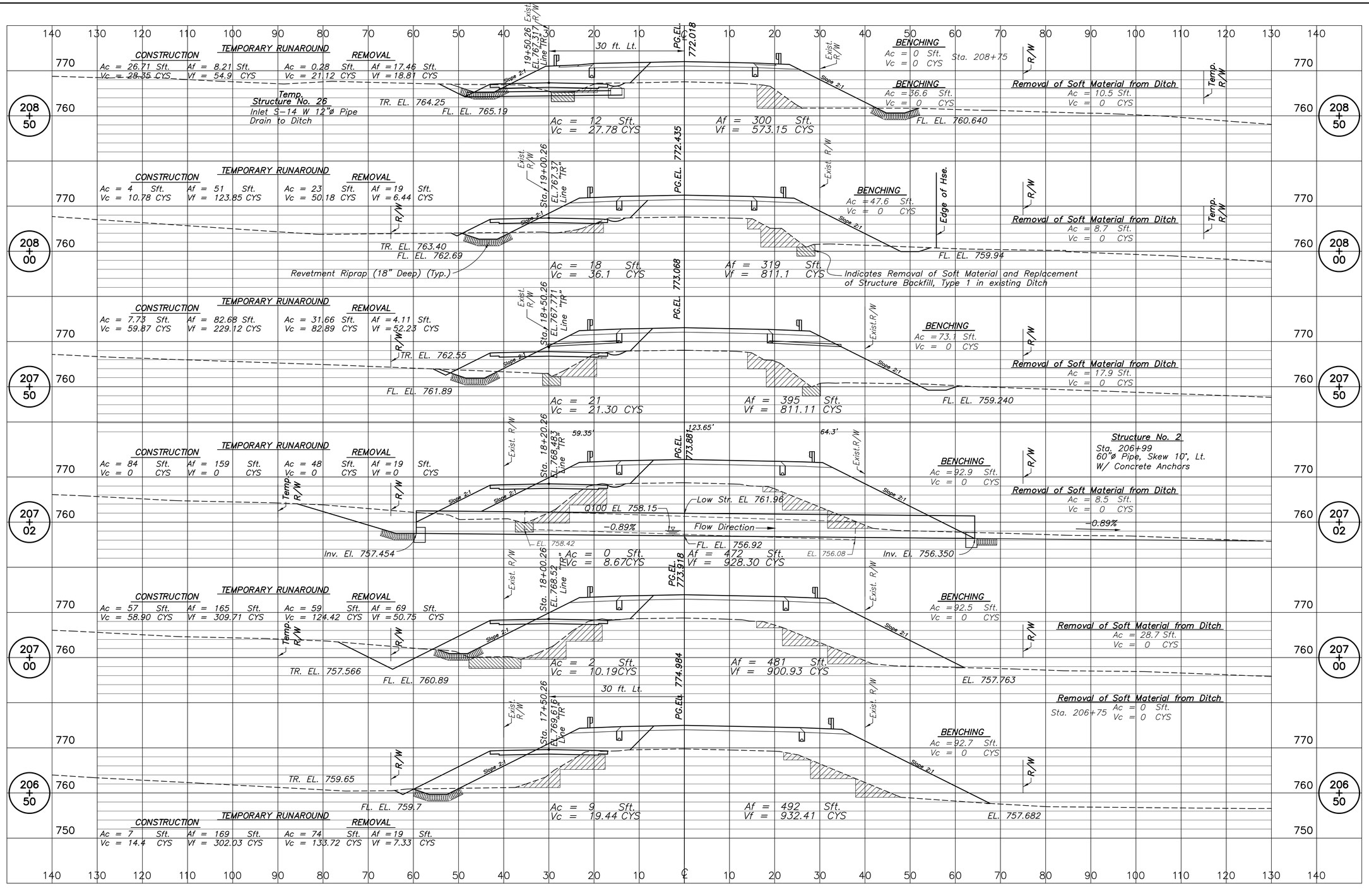


**ASA Engineering Consultants, Inc.**
3717 Woodview Trace
Indianapolis, Indiana 46268
(317) 334-1334

| | |
|---|---|
| DESIGNED ASA | DRAWN JimB |
| CHECKED AAC | CHECKED ASA |

INDIANA
DEPARTMENT OF TRANSPORTATION

ROADWAY CROSS-SECTIONS

| SCALE | BRIDGE FILE |
|---|---|
| 1" = 10'-0" | |
| LINE | DESIGNATION |
| "PR" | 9467555 |
| SURVEY BOOK | SHEETS |
| | 34 of 59 |
| CONTRACT | PROJECT NO. |
| 24382 | MWP-5000 (00C) |

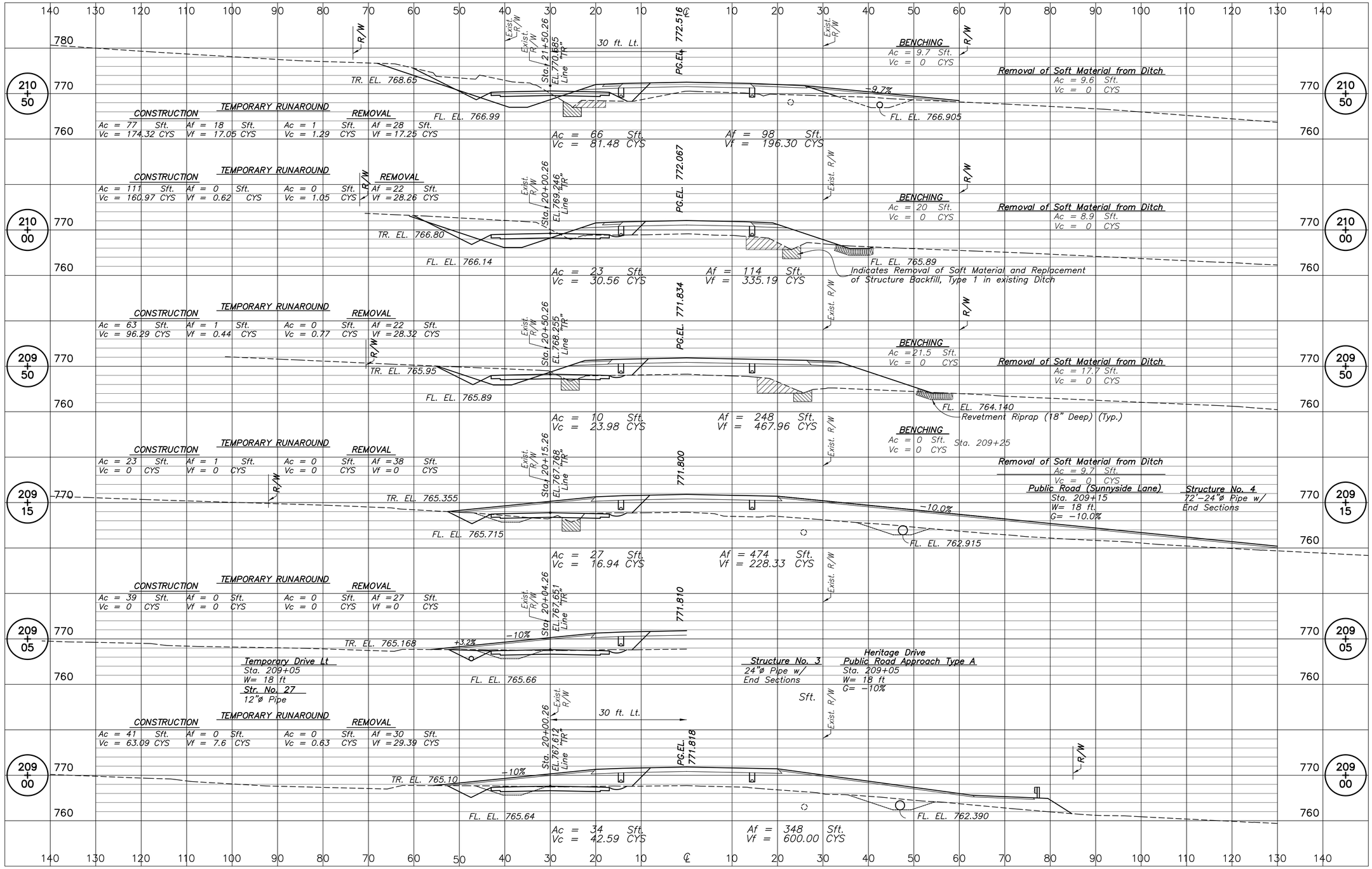



ASA Engineering Consultants, Inc.
3717 Woodview Trace
Indianapolis, Indiana 46268
(317) 334-1334


| | |
|---|---|
| DESIGNED ASA | DRAWN JimB |
| CHECKED AAC | CHECKED ASA |

INDIANA
DEPARTMENT OF TRANSPORTATION

ROADWAY CROSS-SECTIONS

| SCALE | BRIDGE FILE |
|---|---|
| 1" = 10'-0" | |
| LINE | DESIGNATION |
| "PR" | 9467555 |
| SURVEY BOOK | SHEETS |
| | 35 of 59 |
| CONTRACT | PROJECT NO. |
| 24382 | MWP-5000 (00C) |

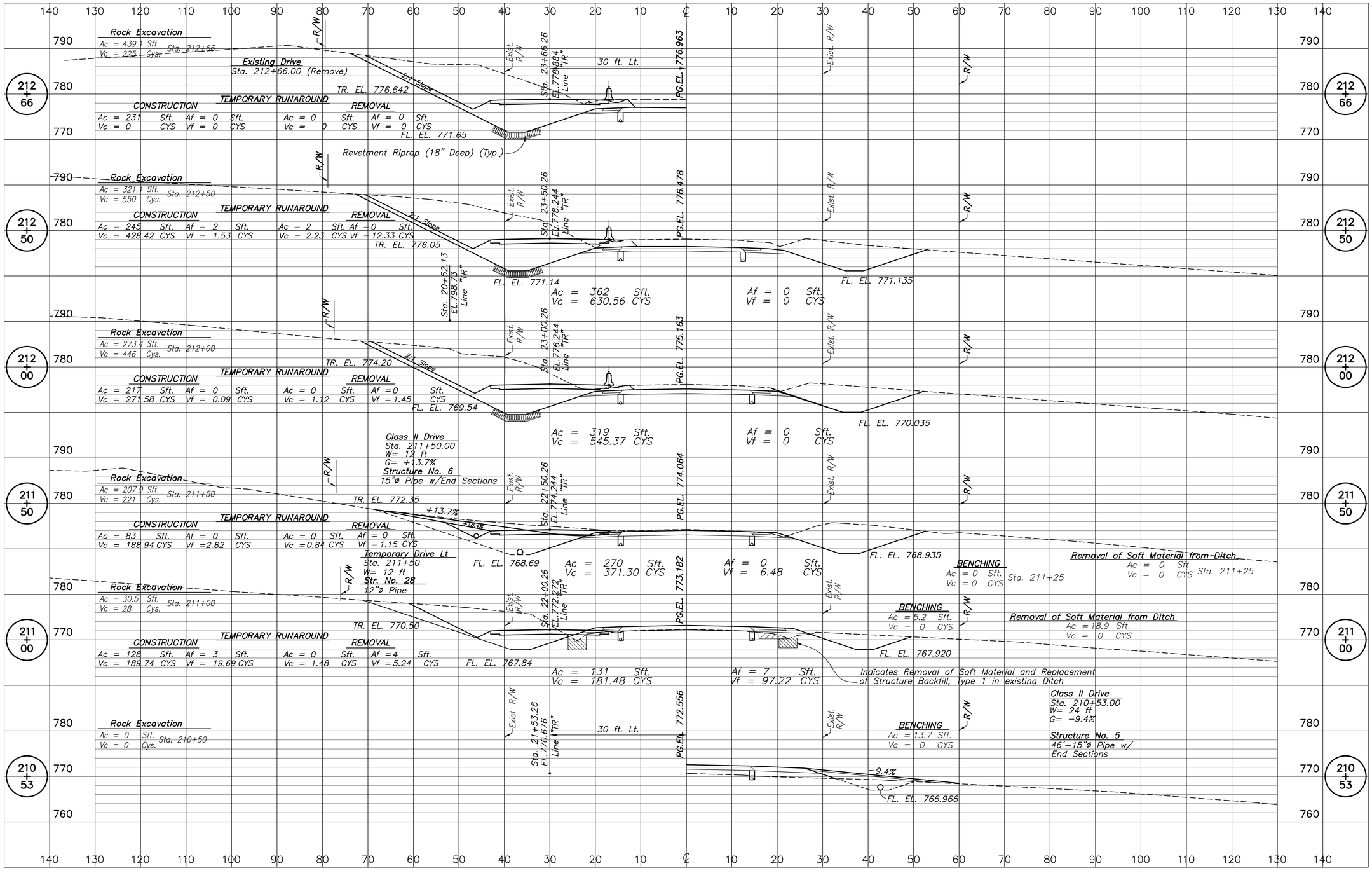


**ASA Engineering Consultants, Inc.**
3717 Woodview Trace
Indianapolis, Indiana 46268
(317) 334-1334

| | |
|---|---|
| DESIGNED ASA | DRAWN JimB |
| CHECKED AAC | CHECKED ASA |

INDIANA
DEPARTMENT OF TRANSPORTATION

ROADWAY CROSS-SECTIONS

| SCALE | BRIDGE FILE |
|---|---|
| 1" = 10'-0" | |
| LINE | DESIGNATION |
| "PR" | 9467555 |
| SURVEY BOOK | SHEETS |
| | 36 of 59 |
| CONTRACT | PROJECT NO. |
| 24382 | MWP-5000 (00C) |

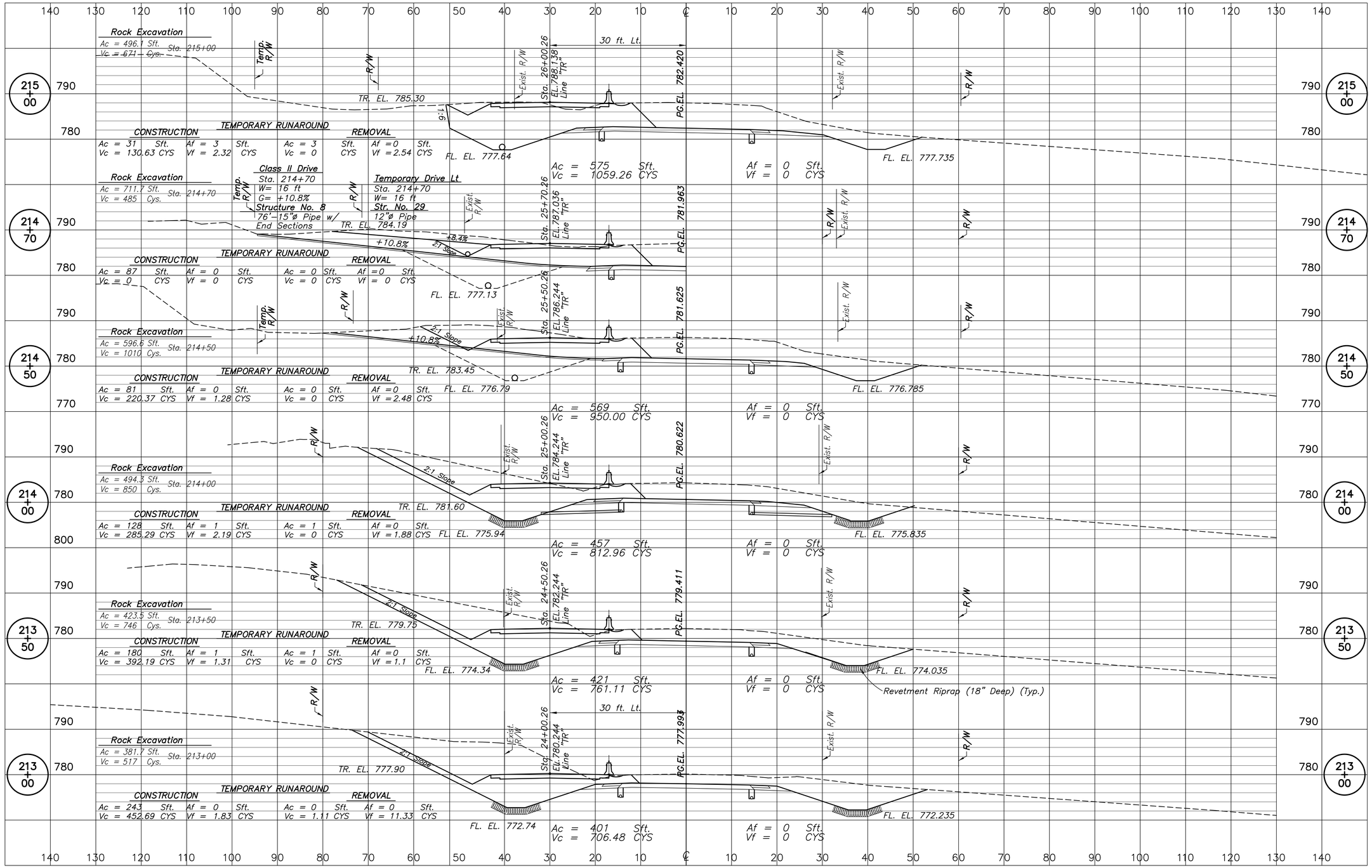


ASA Engineering Consultants, Inc.
3717 Woodview Trace
Indianapolis, Indiana 46268
(317) 334-1334

| | |
|---|---|
| DESIGNED ASA | DRAWN JimB |
| CHECKED AAC | CHECKED ASA |

INDIANA
DEPARTMENT OF TRANSPORTATION

ROADWAY CROSS-SECTIONS

| SCALE | BRIDGE FILE |
|---|---|
| 1" = 10'-0" | |
| LINE | DESIGNATION |
| "PR" | 9467555 |
| SURVEY BOOK | SHEETS |
| | 37 of 59 |
| CONTRACT | PROJECT NO. |
| 24382 | MWP-5000 (00C) |

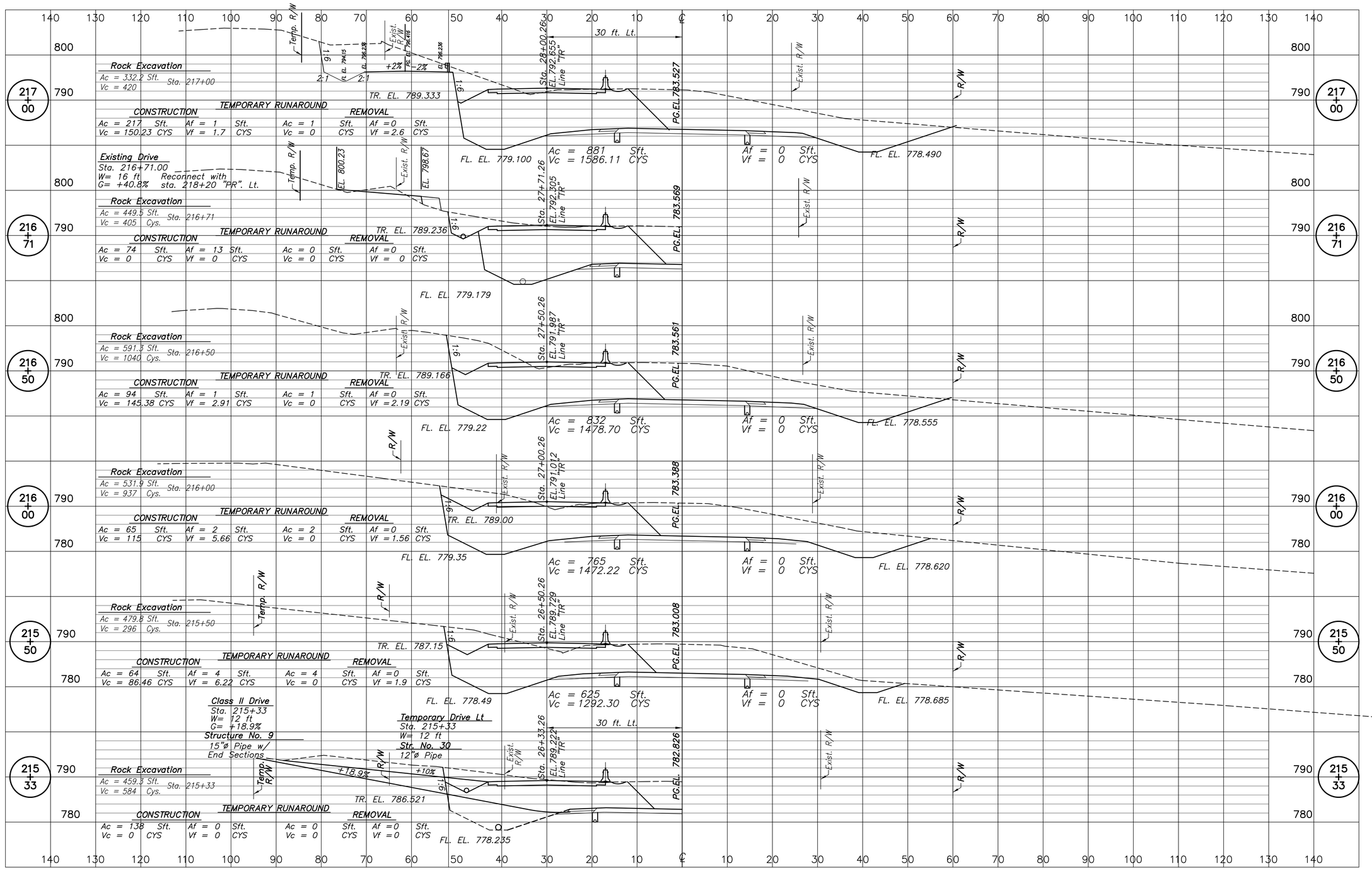
217 + 00
Rock Excavation
Ac = 332.2 Sft.
Vc = 420
Sta. 217+00
TR. EL. 789.333
CONSTRUCTION
Ac = 217 Sft. Af = 1 Sft.
Vc = 150.23 CYS Vf = 1.7 CYS
TEMPORARY RUNAROUND
Ac = 1 Sft. Af = 0 Sft.
Vc = 0 CYS Vf = 2.6 CYS
REMOVAL
FL. EL. 779.100
Ac = 881 Sft.
Vc = 1586.11 CYS
Af = 0 Sft.
Vf = 0 CYS
FL. EL. 778.490
Sta. 28+00.26
EL. 792.655
Line "TR"
PG.EL. 783.527
30 ft. Lt.
Existing Drive
Sta. 216+71.00
W= 16 ft Reconnect with
G= +40.8% sta. 218+20 "PR". Lt.
EL. 800.23
EL. 798.67
216 + 71
Rock Excavation
Ac = 449.5 Sft.
Vc = 405 Cys.
Sta. 216+71
TR. EL. 789.236
Ac = 74 Sft. Af = 13 Sft.
Vc = 0 CYS Vf = 0 CYS
Ac = 0 Sft. Af = 0 Sft.
Vc = 0 CYS Vf = 0 CYS
FL. EL. 779.179
Sta. 27+71.26
EL. 792.305
Line "TR"
PG.EL. 783.569
216 + 50
Rock Excavation
Ac = 591.3 Sft.
Vc = 1040 Cys.
Sta. 216+50
TR. EL. 789.166
Ac = 94 Sft. Af = 1 Sft.
Vc = 145.38 CYS Vf = 2.91 CYS
Ac = 1 Sft. Af = 0 Sft.
Vc = 0 CYS Vf = 2.19 CYS
FL. EL. 779.22
Ac = 832 Sft.
Vc = 1478.70 CYS
Af = 0 Sft.
Vf = 0 CYS
FL. EL. 778.555
Sta. 27+50.26
EL. 791.987
Line "TR"
PG.EL. 783.561
216 + 00
Rock Excavation
Ac = 531.9 Sft.
Vc = 937 Cys.
Sta. 216+00
TR. EL. 789.00
Ac = 65 Sft. Af = 2 Sft.
Vc = 115 CYS Vf = 5.66 CYS
Ac = 2 Sft. Af = 0 Sft.
Vc = 0 CYS Vf = 1.56 CYS
FL. EL. 779.35
Ac = 765 Sft.
Vc = 1472.22 CYS
Af = 0 Sft.
Vf = 0 CYS
FL. EL. 778.620
Sta. 27+00.26
EL. 791.012
Line "TR"
PG.EL. 783.388
215 + 50
Rock Excavation
Ac = 479.8 Sft.
Vc = 296 Cys.
Sta. 215+50
TR. EL. 787.15
Ac = 64 Sft. Af = 4 Sft.
Vc = 86.46 CYS Vf = 6.22 CYS
Ac = 4 Sft. Af = 0 Sft.
Vc = 0 CYS Vf = 1.9 CYS
FL. EL. 778.49
Ac = 625 Sft.
Vc = 1292.30 CYS
Af = 0 Sft.
Vf = 0 CYS
FL. EL. 778.685
Sta. 26+50.26
EL. 789.729
Line "TR"
PG.EL. 783.008
Class II Drive
Sta. 215+33
W= 12 ft
G= +18.9%
Temporary Drive Lt
Sta. 215+33
W= 12 ft
Str. No. 30
12"ø Pipe
30 ft. Lt.
Structure No. 9
15"ø Pipe w/
End Sections
215 + 33
Rock Excavation
Ac = 459.3 Sft.
Vc = 584 Cys.
Sta. 215+33
TR. EL. 786.521
Ac = 138 Sft. Af = 0 Sft.
Vc = 0 CYS Vf = 0 CYS
Ac = 0 Sft. Af = 0 Sft.
Vc = 0 CYS Vf = 0 CYS
FL. EL. 778.235
Sta. 26+33.26
EL. 789.221
Line "TR"
PG.EL. 782.826
Temp. R/W
Exist. R/W
R/W
+2%
-2%
+18.9%
+10%
1:6
2:1
FL. EL. 794.15
FL. EL. 796.28
FL. EL. 796.418
FL. EL. 796.28
FL. EL. 796.28
FL. EL. 796.28

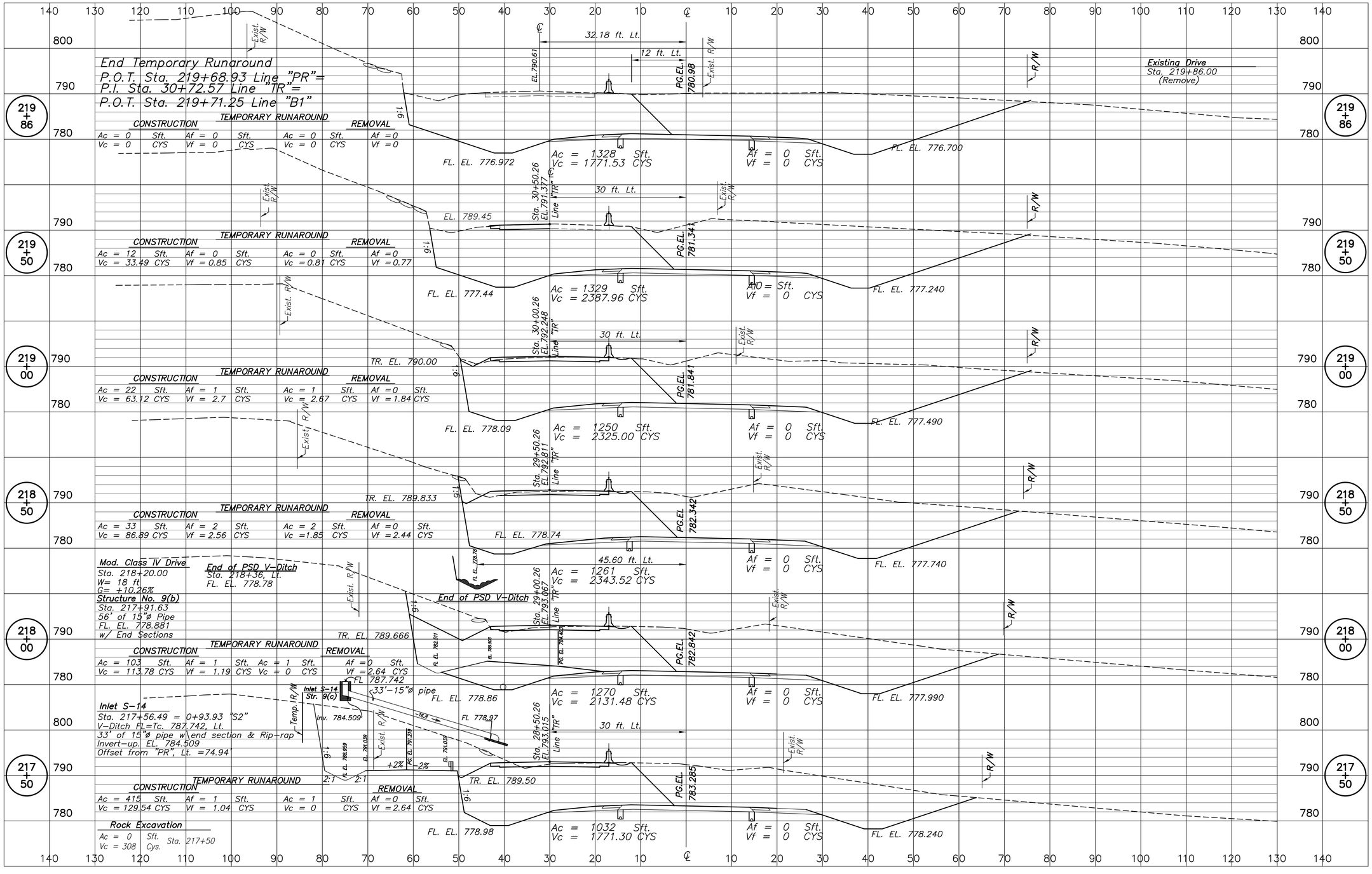


ASA Engineering Consultants, Inc.
3717 Woodview Trace
Indianapolis, Indiana 46268
(317) 334-1334

DESIGNED ASA | DRAWN JimB
CHECKED AAC | CHECKED ASA

INDIANA
DEPARTMENT OF TRANSPORTATION

ROADWAY CROSS-SECTIONS

| SCALE | BRIDGE FILE |
|---|---|
| 1" = 10'-0" | |
| LINE | DESIGNATION |
| "PR" | 9467555 |
| SURVEY BOOK | SHEETS |
| | 39 of 59 |
| CONTRACT | PROJECT NO. |
| 24382 | MWP-5000 (00C) |

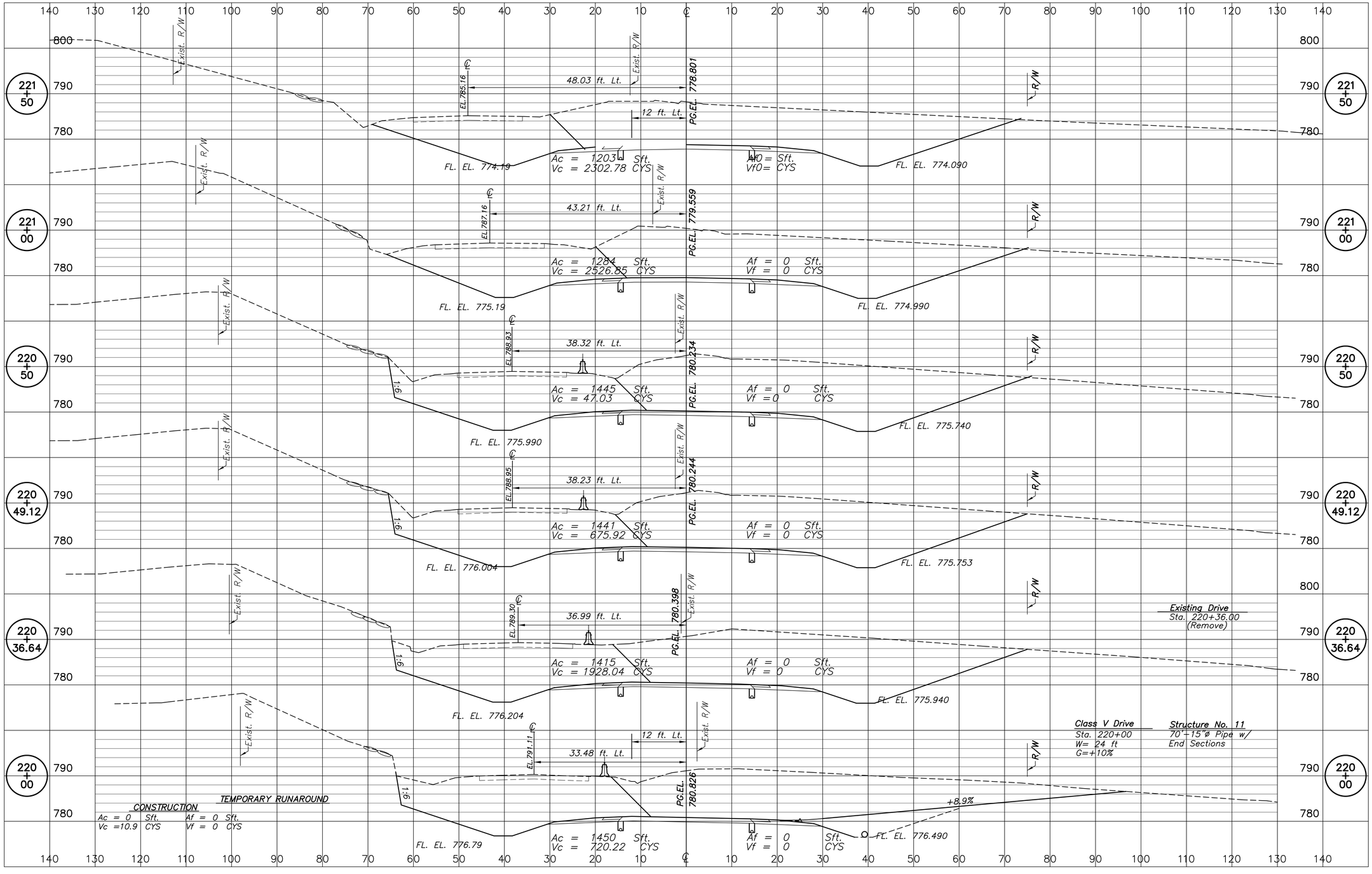


ASA Engineering Consultants, Inc.
3717 Woodview Trace
Indianapolis, Indiana 46268
(317) 334-1334

| | |
|---|---|
| DESIGNED ASA | DRAWN JimB |
| CHECKED AAC | CHECKED ASA |

INDIANA
DEPARTMENT OF TRANSPORTATION

ROADWAY CROSS-SECTIONS

| SCALE | BRIDGE FILE |
|---|---|
| 1" = 10'-0" | |
| LINE | DESIGNATION |
| "PR" | 9467555 |
| SURVEY BOOK | SHEETS |
| | 40 of 59 |
| CONTRACT | PROJECT NO. |
| 24382 | MWP-5000 (00C) |

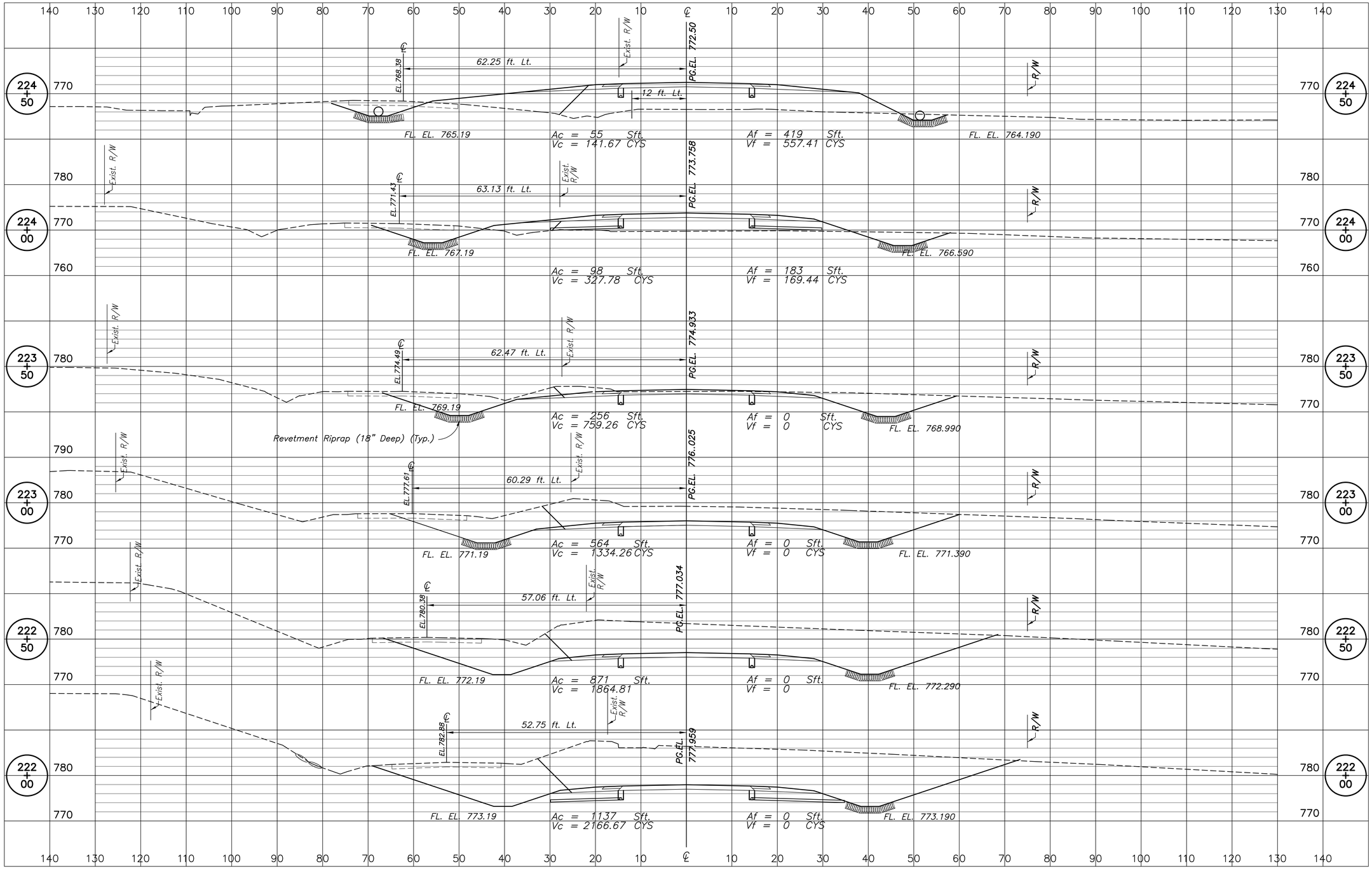


**ASA Engineering Consultants, Inc.**
3717 Woodview Trace
Indianapolis, Indiana 46268
(317) 334-1334

| | |
|---|---|
| DESIGNED ASA | DRAWN JimB |
| CHECKED AAC | CHECKED ASA |

INDIANA
DEPARTMENT OF TRANSPORTATION

ROADWAY CROSS-SECTIONS

| SCALE | BRIDGE FILE |
|---|---|
| 1" = 10'-0" | |
| LINE | DESIGNATION |
| "PR" | 9467555 |
| SURVEY BOOK | SHEETS |
| | 41 of 59 |
| CONTRACT | PROJECT NO. |
| 24382 | MWP-5000 (00C) |

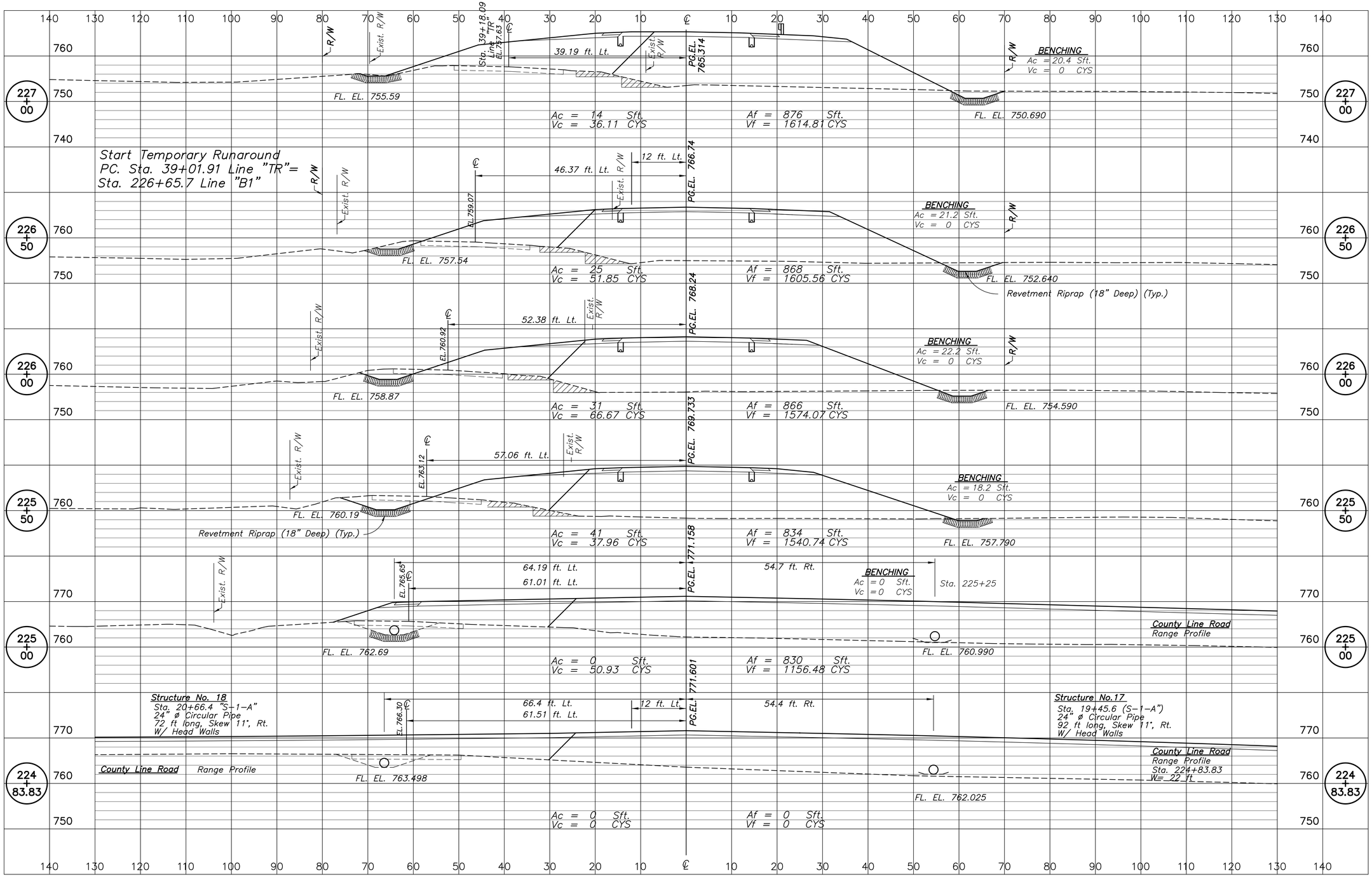



ASA Engineering Consultants, Inc.
3717 Woodview Trace
Indianapolis, Indiana 46268
(317) 334-1334


| | |
|---|---|
| DESIGNED ASA | DRAWN JimB |
| CHECKED AAC | CHECKED ASA |

INDIANA
DEPARTMENT OF TRANSPORTATION

ROADWAY CROSS-SECTIONS

| SCALE | BRIDGE FILE |
|---|---|
| 1" = 10'-0" | |
| LINE | DESIGNATION |
| "PR" | 9467555 |
| SURVEY BOOK | SHEETS |
| | 42 of 59 |
| CONTRACT | PROJECT NO. |
| 24382 | MWP-5000 (00C) |

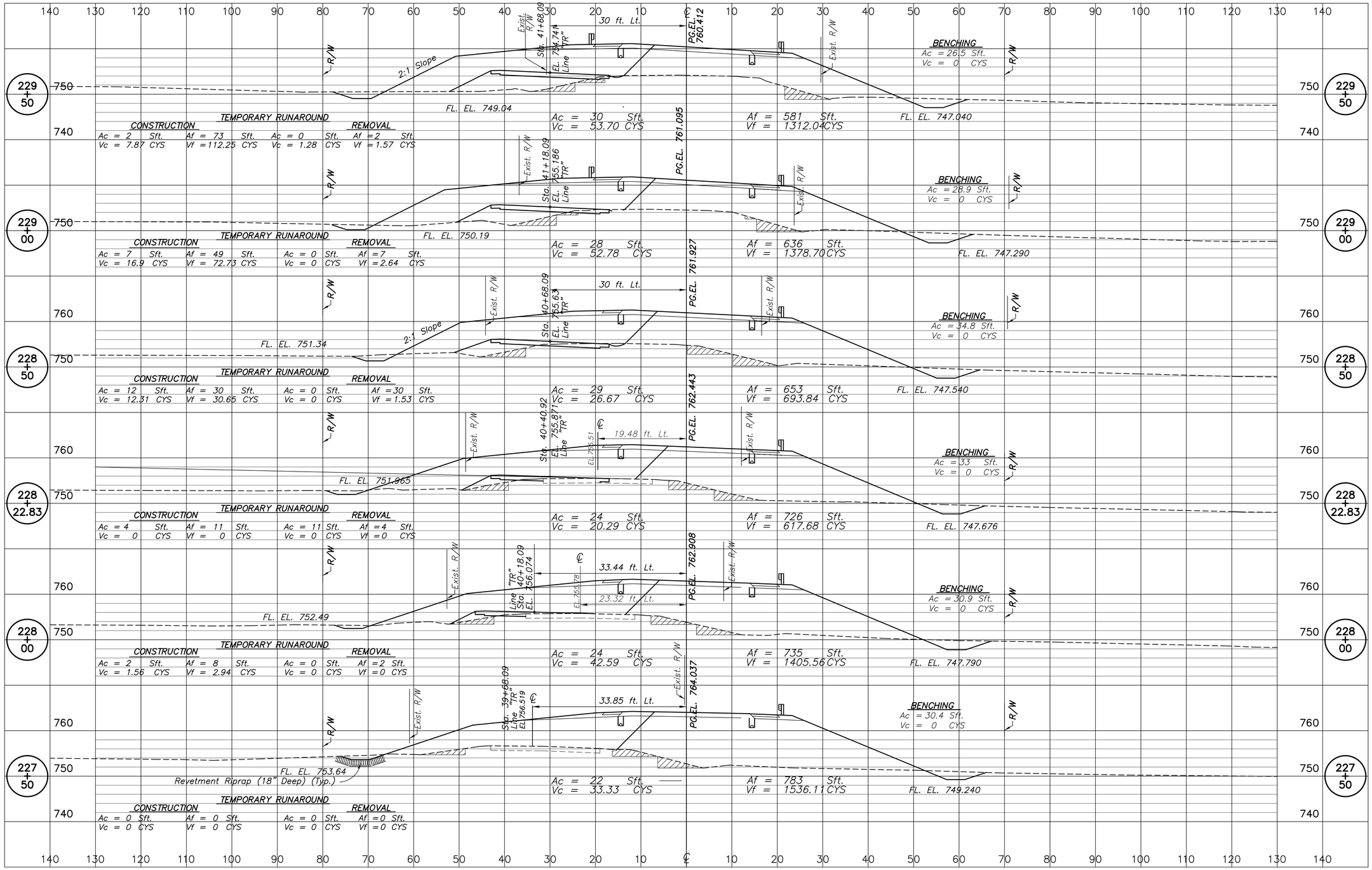


ASA Engineering Consultants, Inc.
3717 Woodview Trace
Indianapolis, Indiana 46268
(317) 334-1334

DESIGNED ASA | DRAWN JimB
CHECKED AAC | CHECKED ASA

INDIANA DEPARTMENT OF TRANSPORTATION

ROADWAY CROSS-SECTIONS

| SCALE | BRIDGE FILE |
|---|---|
| 1" = 10'-0" | |
| LINE | DESIGNATION |
| "PR" | 9467555 |
| SURVEY BOOK | SHEETS |
| | 43 of 59 |
| CONTRACT | PROJECT NO. |
| 24382 | MWP-5000 (00C) |

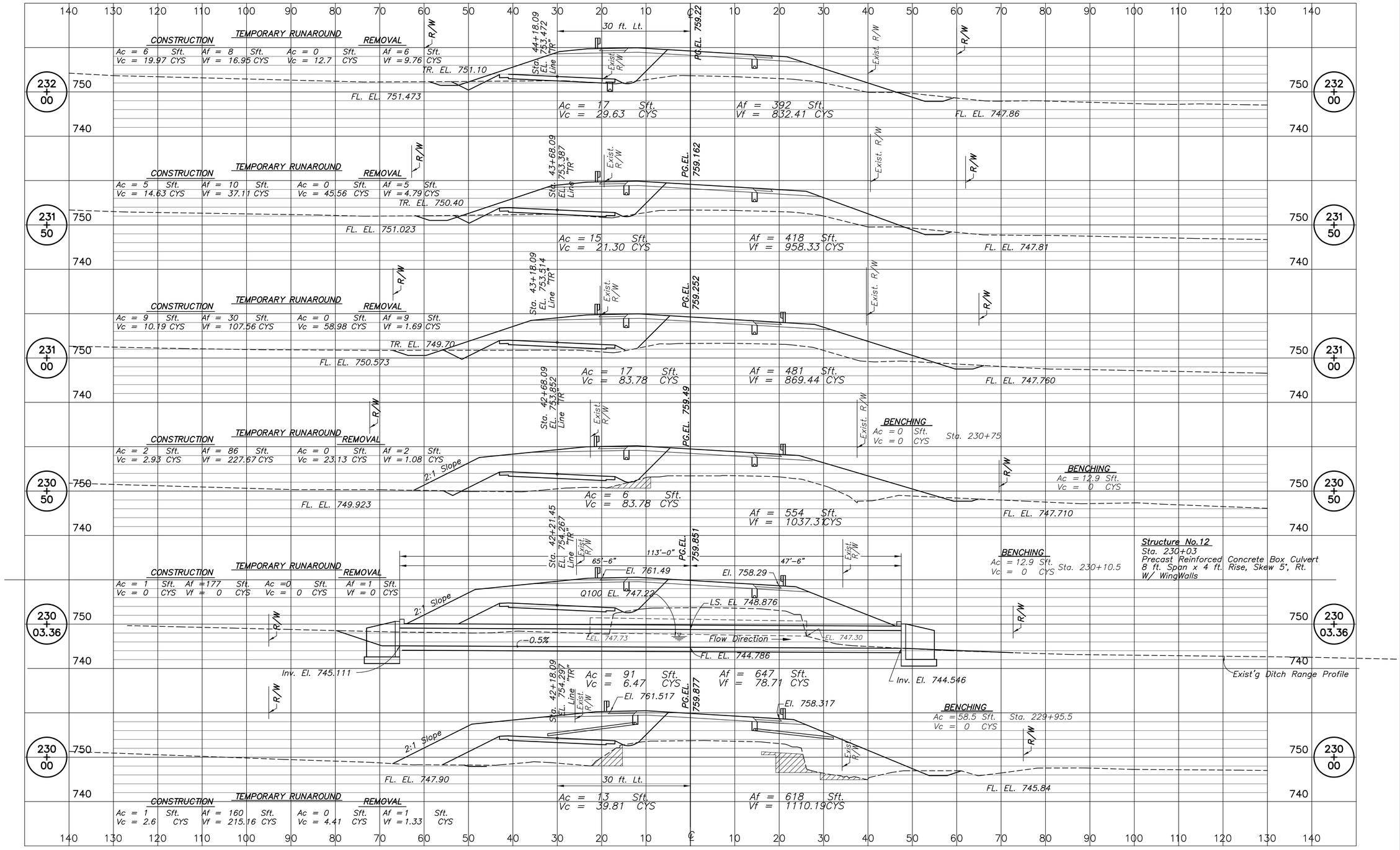


ASA Engineering Consultants, Inc.
3717 Woodview Trace
Indianapolis, Indiana 46268
(317) 334-1334

| | |
|---|---|
| DESIGNED ASA | DRAWN JimB |
| CHECKED AAC | CHECKED ASA |

INDIANA
DEPARTMENT OF TRANSPORTATION

ROADWAY CROSS-SECTIONS

| SCALE | BRIDGE FILE |
|---|---|
| 1" = 10'-0" | |
| LINE | DESIGNATION |
| "PR" | 9467555 |
| SURVEY BOOK | SHEETS |
| | 44 of 59 |
| CONTRACT | PROJECT NO. |
| 24382 | MWP-5000 (00C) |

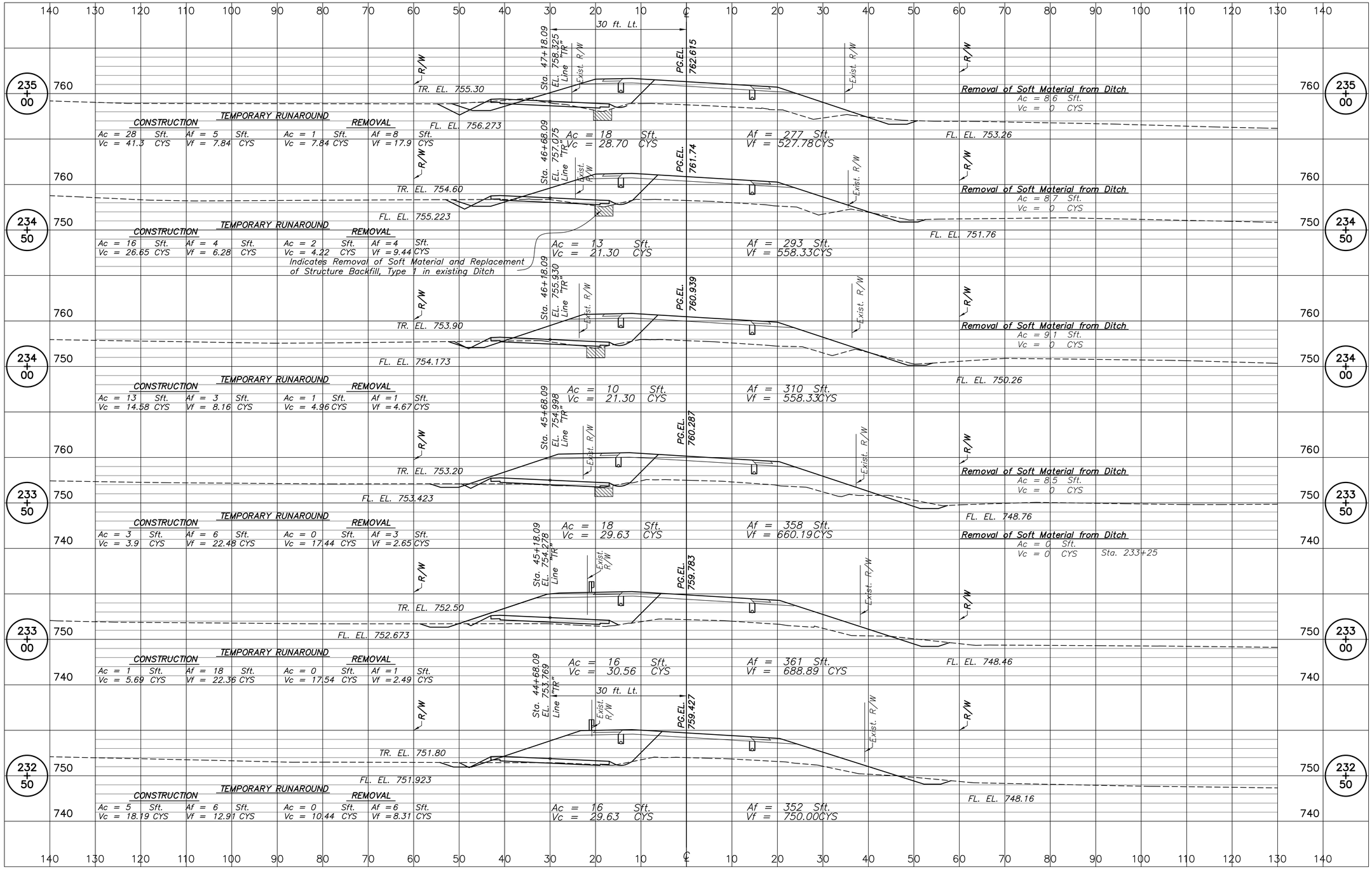


**ASA Engineering Consultants, Inc.**
3717 Woodview Trace
Indianapolis, Indiana 46268
(317) 334-1334

| | |
|---|---|
| DESIGNED ASA | DRAWN JimB |
| CHECKED AAC | CHECKED ASA |

INDIANA
DEPARTMENT OF TRANSPORTATION

ROADWAY CROSS-SECTIONS

| SCALE | BRIDGE FILE |
|---|---|
| 1" = 10'-0" | |
| LINE | DESIGNATION |
| "PR" | 9467555 |
| SURVEY BOOK | SHEETS |
| | 45 of 59 |
| CONTRACT | PROJECT NO. |
| 24382 | MWP-5000 (00C) |

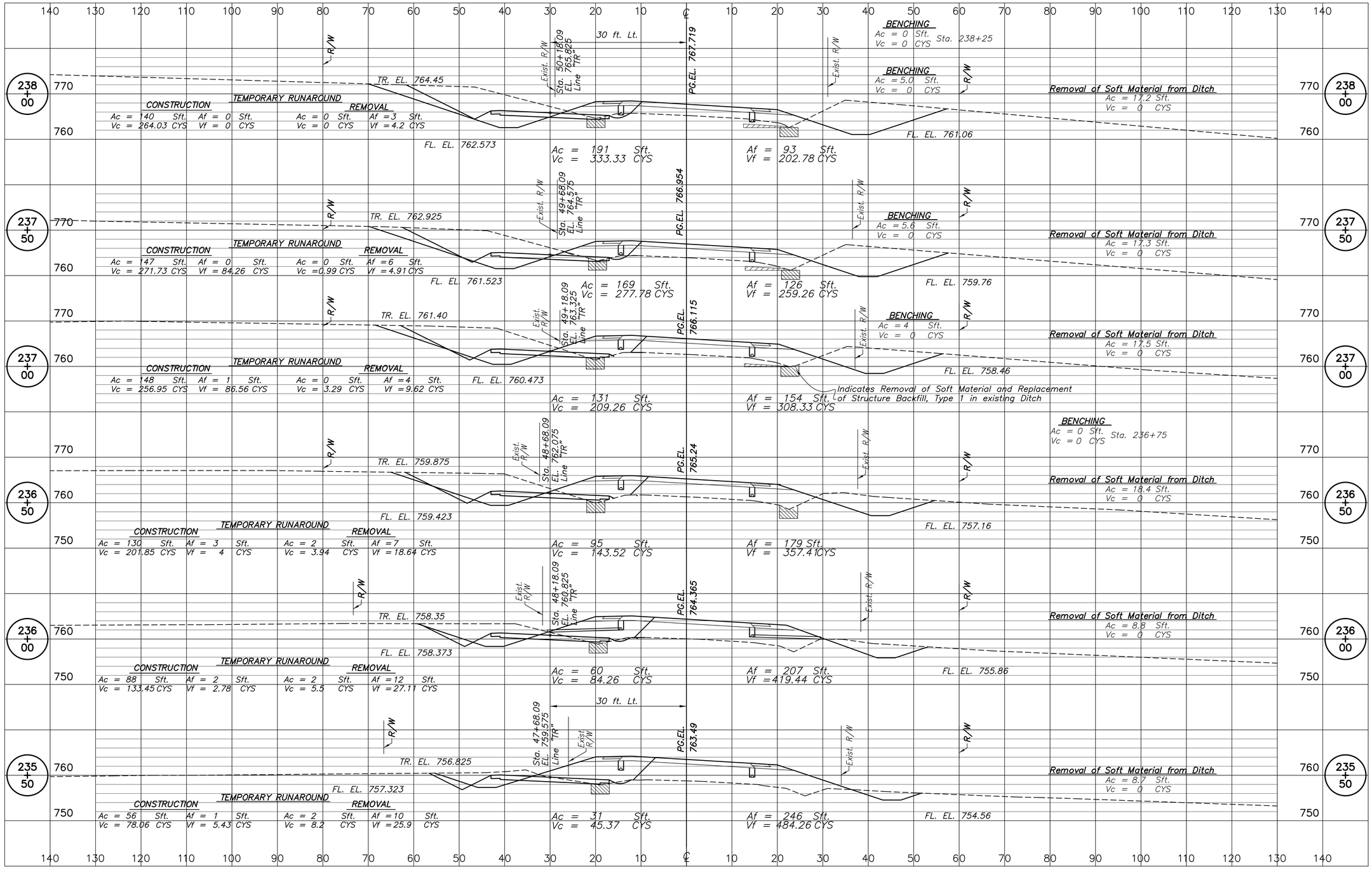


ASA Engineering Consultants, Inc.
3717 Woodview Trace
Indianapolis, Indiana 46268
(317) 334-1334

| | |
|---|---|
| DESIGNED ASA | DRAWN JimB |
| CHECKED AAC | CHECKED ASA |

INDIANA
DEPARTMENT OF TRANSPORTATION

ROADWAY CROSS-SECTIONS

| SCALE | BRIDGE FILE |
|---|---|
| 1" = 10'-0" | |
| LINE | DESIGNATION |
| "PR" | 9467555 |
| SURVEY BOOK | SHEETS |
| | 46 of 59 |
| CONTRACT | PROJECT NO. |
| 24382 | MWP-5000 (00C) |

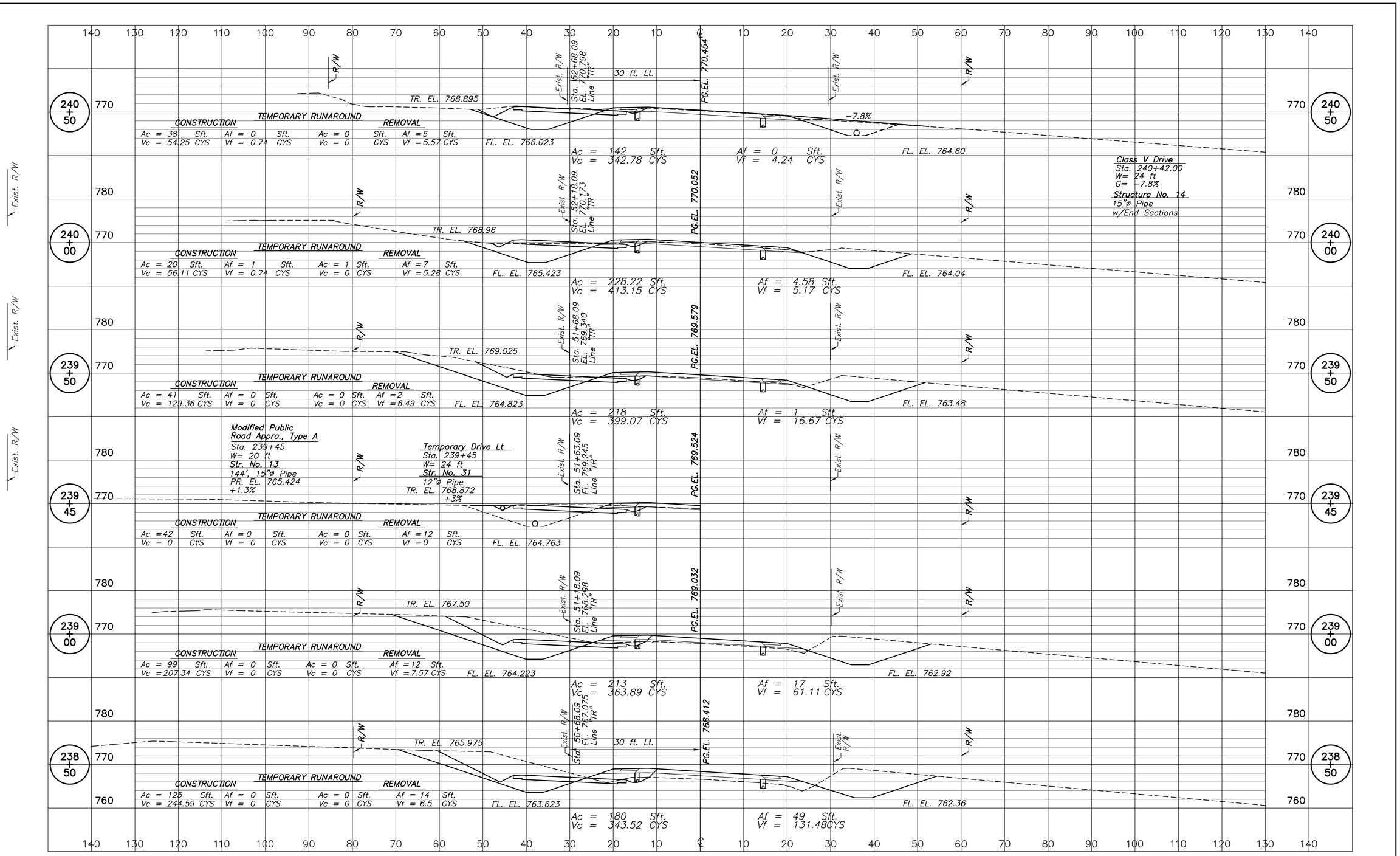



ASA Engineering Consultants, Inc.
3717 Woodview Trace
Indianapolis, Indiana 46268
(317) 334-1334


| | |
|---|---|
| DESIGNED ASA | DRAWN JimB |
| CHECKED AAC | CHECKED ASA |

INDIANA
DEPARTMENT OF TRANSPORTATION

ROADWAY CROSS-SECTIONS

| SCALE | BRIDGE FILE |
|---|---|
| 1" = 10'-0" | |
| LINE | DESIGNATION |
| "PR" | 9467555 |
| SURVEY BOOK | SHEETS |
| | 47 of 59 |
| CONTRACT | PROJECT NO. |
| 24382 | MWP-5000 (00C) |

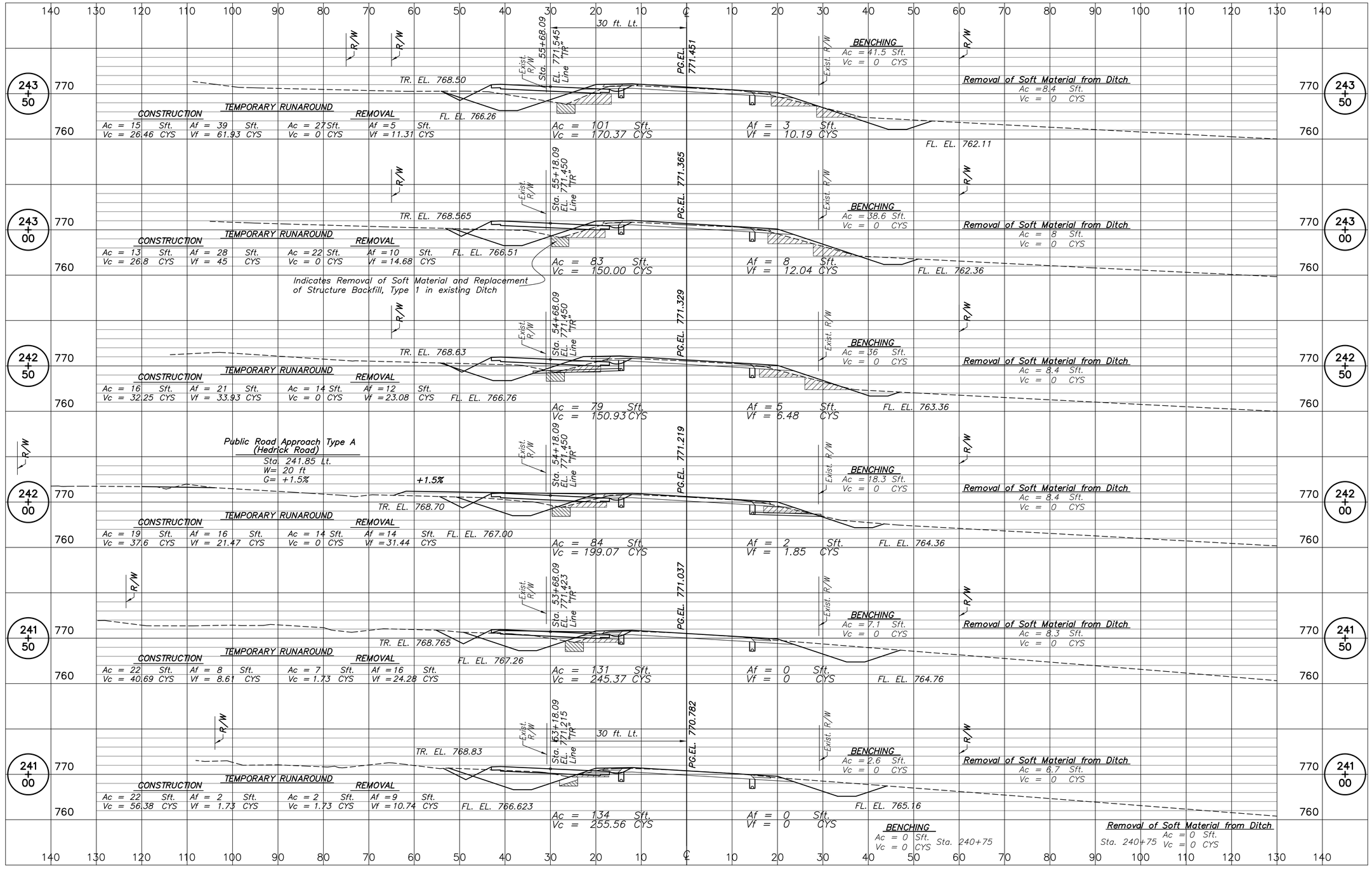



ASA Engineering Consultants, Inc.
3717 Woodview Trace
Indianapolis, Indiana 46268
(317) 334-1334


| | |
|---|---|
| DESIGNED ASA | DRAWN JimB |
| CHECKED AAC | CHECKED ASA |

INDIANA
DEPARTMENT OF TRANSPORTATION

ROADWAY CROSS-SECTIONS

| SCALE | BRIDGE FILE |
|---|---|
| 1" = 10'-0" | |
| LINE | DESIGNATION |
| "PR" | 9467555 |
| SURVEY BOOK | SHEETS |
| | 48 of 59 |
| CONTRACT | PROJECT NO. |
| 24382 | MWP-5000 (00C) |

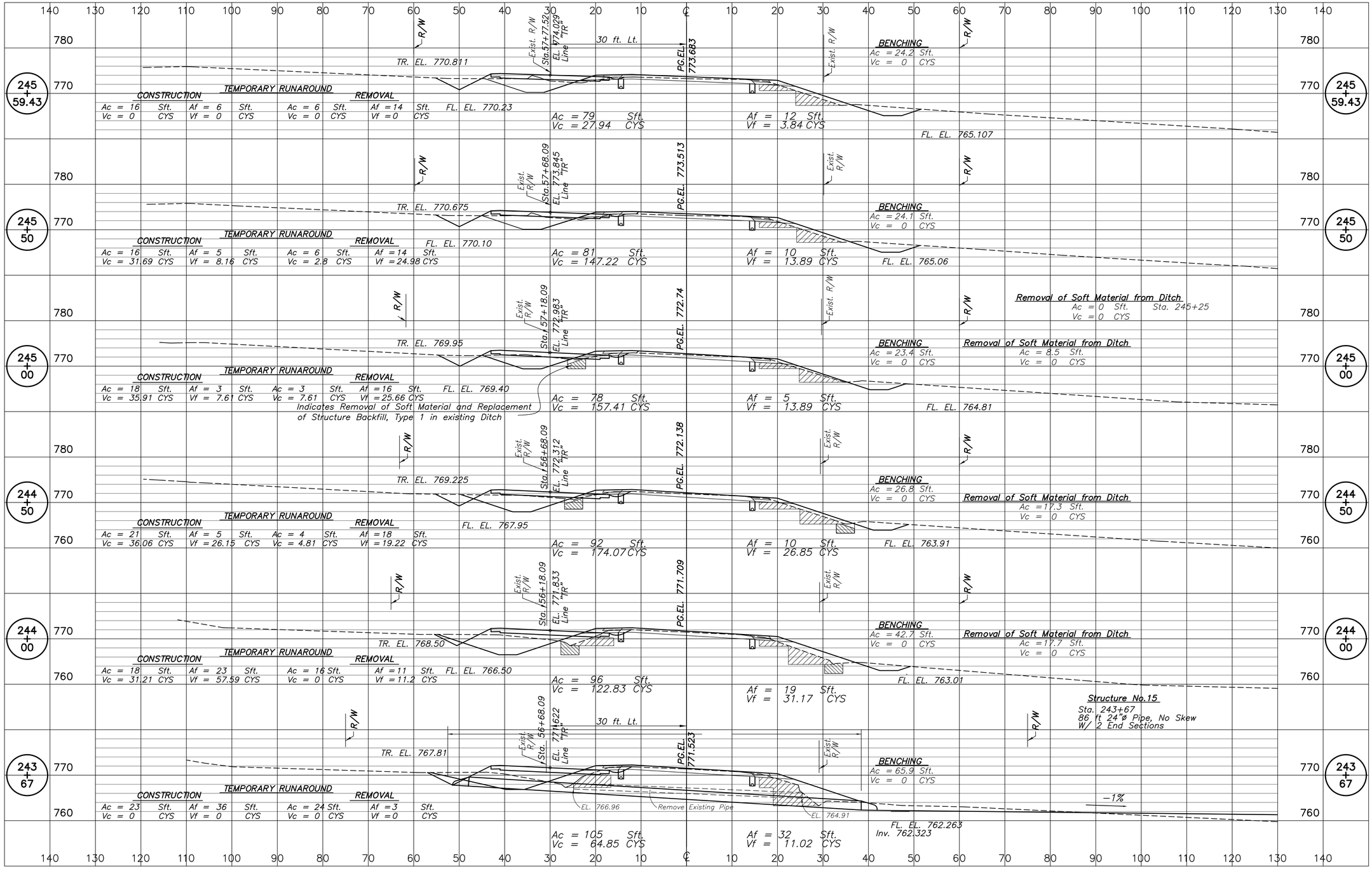



ASA Engineering Consultants, Inc.
3717 Woodview Trace
Indianapolis, Indiana 46268
(317) 334-1334


| | |
|---|---|
| DESIGNED ASA | DRAWN JimB |
| CHECKED AAC | CHECKED ASA |

INDIANA
DEPARTMENT OF TRANSPORTATION

ROADWAY CROSS-SECTIONS

| SCALE | BRIDGE FILE |
|---|---|
| 1" = 10'-0" | |
| LINE | DESIGNATION |
| "PR" | 9467555 |
| SURVEY BOOK | SHEETS |
| | 49 of 59 |
| CONTRACT | PROJECT NO. |
| 24382 | MWP-5000 (00C) |

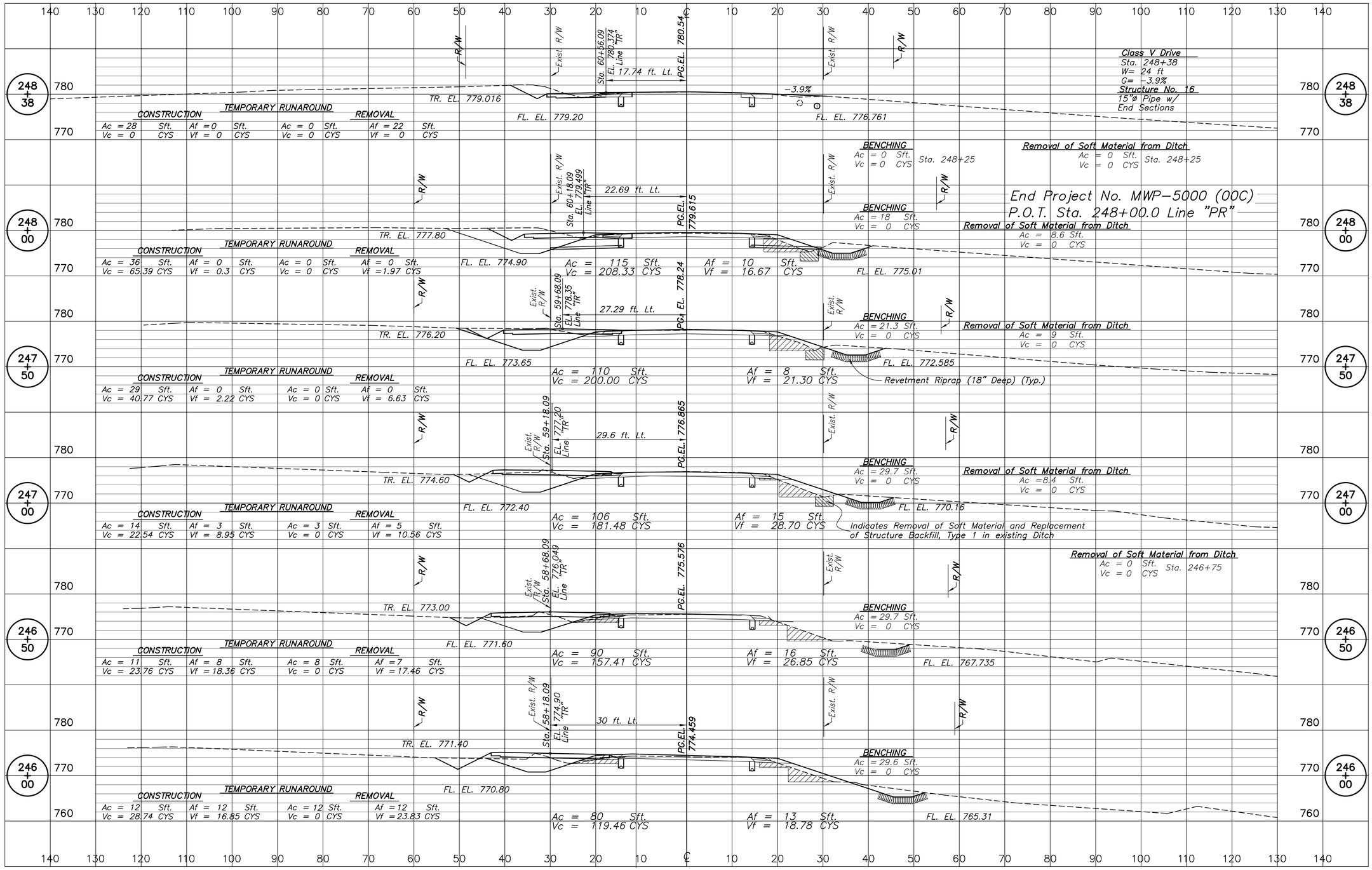



ASA Engineering Consultants, Inc.
3717 Woodview Trace
Indianapolis, Indiana 46268
(317) 334-1334


| | |
|---|---|
| DESIGNED ASA | DRAWN JimB |
| CHECKED AAC | CHECKED ASA |

INDIANA
DEPARTMENT OF TRANSPORTATION

ROADWAY CROSS-SECTIONS

| SCALE | BRIDGE FILE |
|---|---|
| 1" = 10'-0" | |
| LINE | DESIGNATION |
| "PR" | 9467555 |
| SURVEY BOOK | SHEETS |
| | 50 of 59 |
| CONTRACT | PROJECT NO. |
| 24382 | MWP-5000 (00C) |

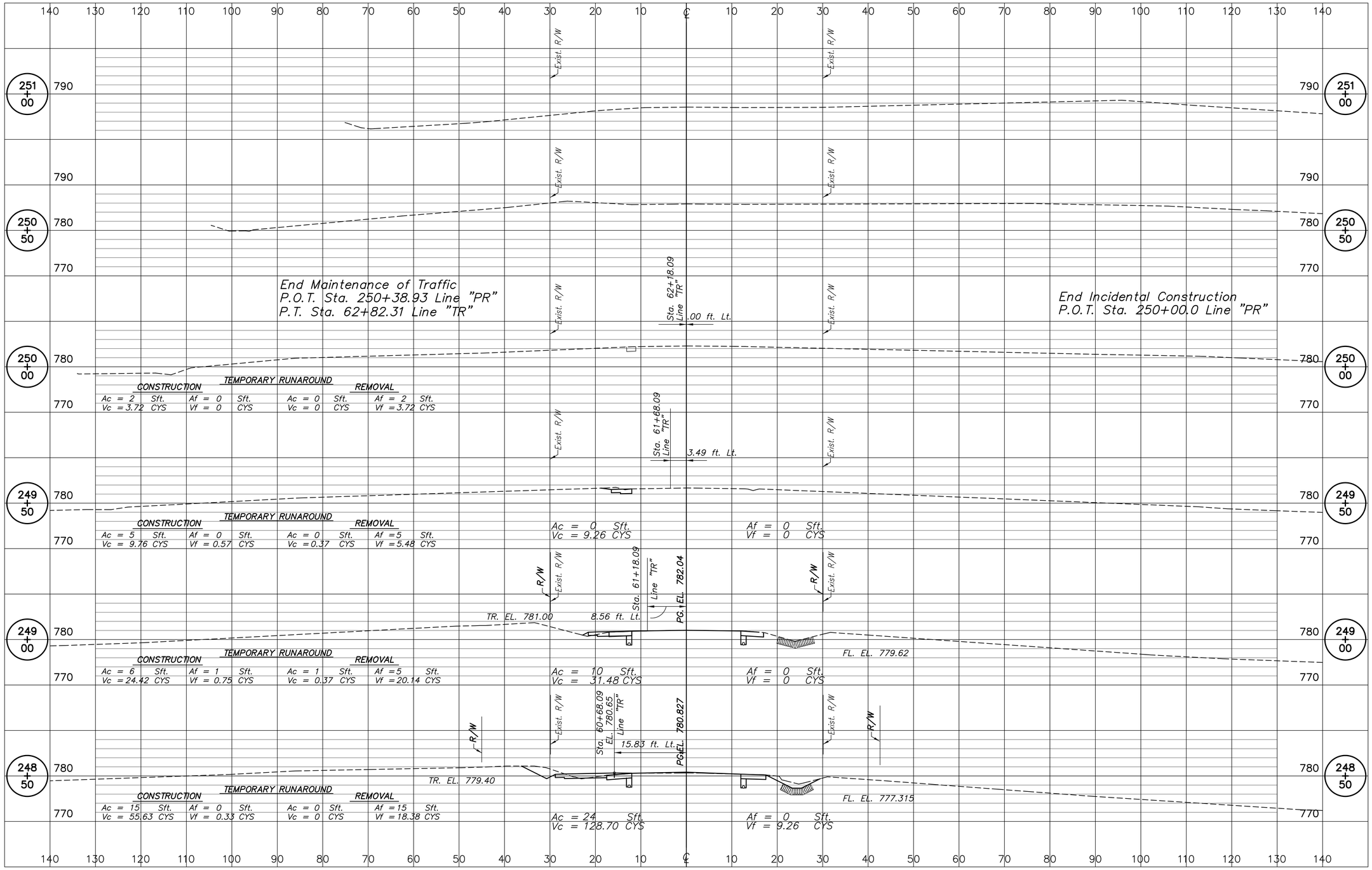



ASA Engineering Consultants, Inc.
3717 Woodview Trace
Indianapolis, Indiana 46268
(317) 334-1334


| | |
|---|---|
| DESIGNED ASA | DRAWN JimB |
| CHECKED AAC | CHECKED ASA |

INDIANA
DEPARTMENT OF TRANSPORTATION

ROADWAY CROSS-SECTIONS

| SCALE | BRIDGE FILE |
|---|---|
| 1" = 10'-0" | |
| LINE | DESIGNATION |
| "PR" | 9467555 |
| SURVEY BOOK | SHEETS |
| | 51 of 59 |
| CONTRACT | PROJECT NO. |
| 24382 | MWP-5000 (00C) |

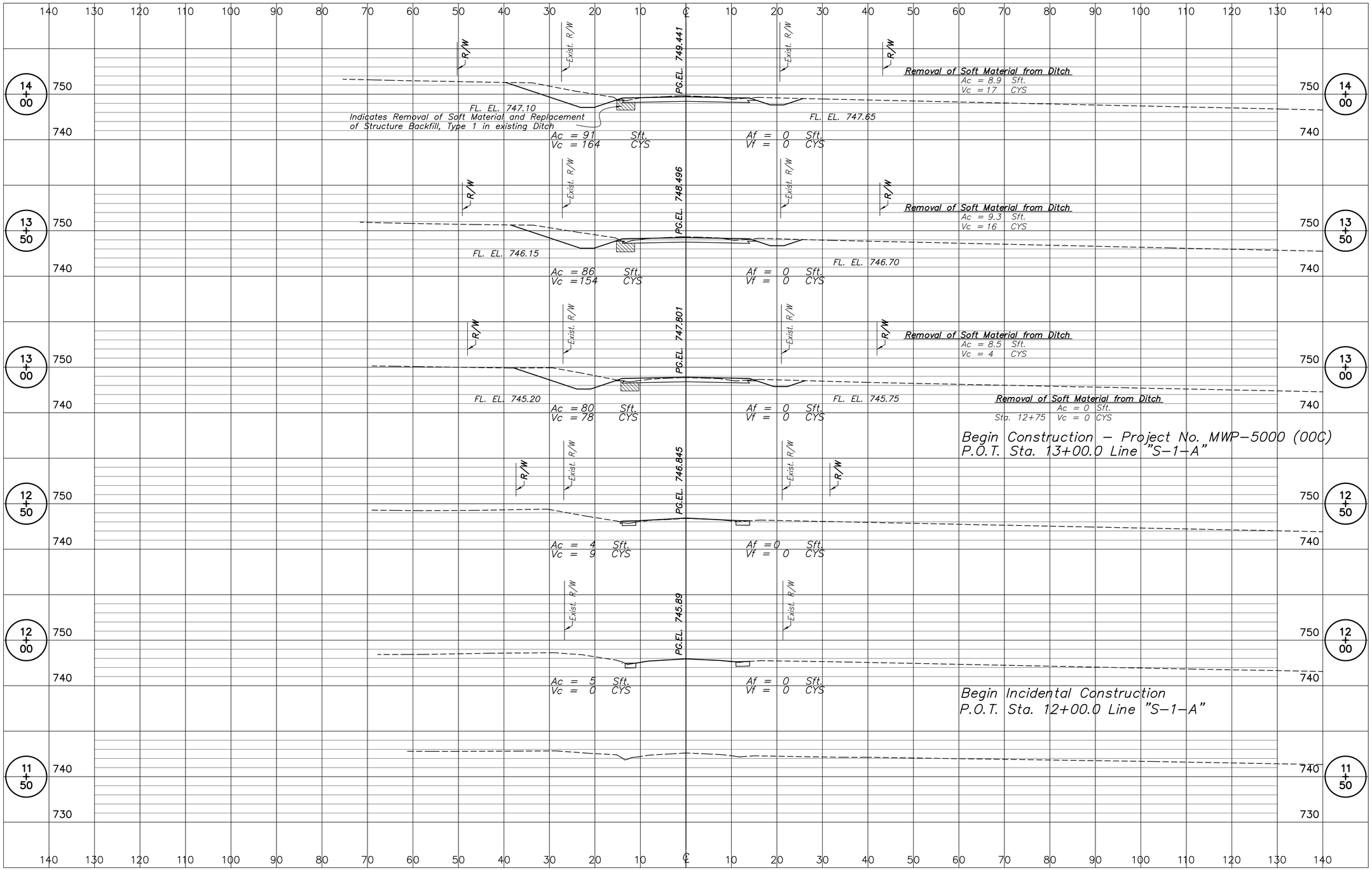



ASA Engineering Consultants, Inc.
3717 Woodview Trace
Indianapolis, Indiana 46268
(317) 334–1334


| | |
|---|---|
| DESIGNED ASA | DRAWN JimB |
| CHECKED AAC | CHECKED ASA |

INDIANA
DEPARTMENT OF TRANSPORTATION

ROADWAY CROSS–SECTIONS

| SCALE | BRIDGE FILE |
|---|---|
| 1" = 10'–0" | |
| LINE | DESIGNATION |
| "S–1–A" | 9467555 |
| SURVEY BOOK | SHEETS |
| | 52 of 59 |
| CONTRACT | PROJECT NO. |
| 24382 | MWP–5000 (00C) |

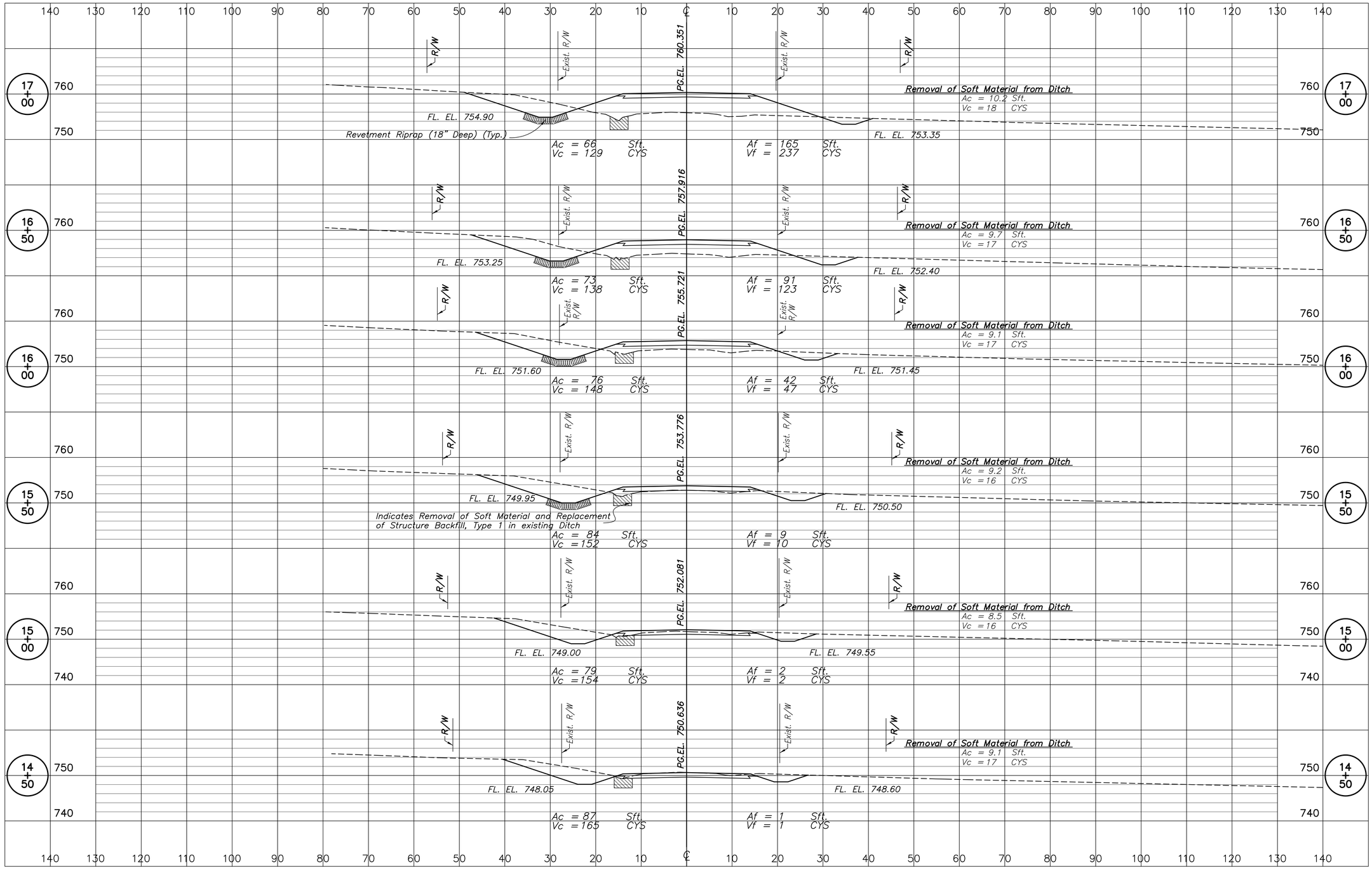



ASA Engineering Consultants, Inc.
3717 Woodview Trace
Indianapolis, Indiana 46268
(317) 334-1334


| | |
|---|---|
| DESIGNED ASA | DRAWN JimB |
| CHECKED AAC | CHECKED ASA |

INDIANA
DEPARTMENT OF TRANSPORTATION

ROADWAY CROSS-SECTIONS

| SCALE | BRIDGE FILE |
|---|---|
| 1" = 10'-0" | |
| LINE | DESIGNATION |
| "S-1-A" | 9467555 |
| SURVEY BOOK | SHEETS |
| | 53 of 59 |
| CONTRACT | PROJECT NO. |
| 24382 | MWP-5000 (00C) |

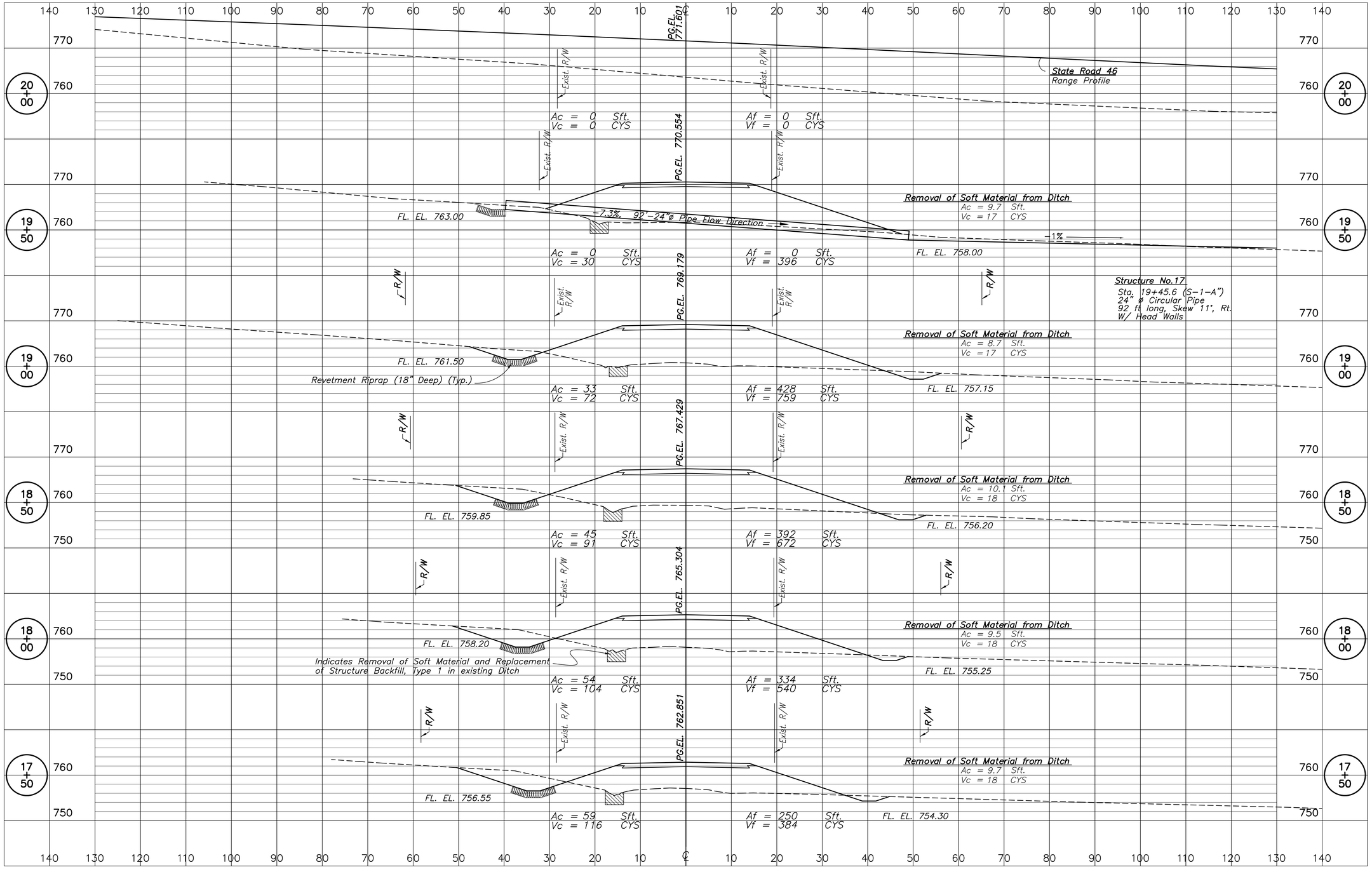


ASA Engineering Consultants, Inc.
3717 Woodview Trace
Indianapolis, Indiana 46268
(317) 334-1334

DESIGNED ASA | DRAWN JimB
CHECKED AAC | CHECKED ASA

INDIANA
DEPARTMENT OF TRANSPORTATION

ROADWAY CROSS-SECTIONS

| SCALE | BRIDGE FILE |
|---|---|
| 1" = 10'-0" | |
| LINE | DESIGNATION |
| "S-1-A" | 9467555 |
| SURVEY BOOK | SHEETS |
| | 54 of 59 |
| CONTRACT | PROJECT NO. |
| 24382 | MWP-5000 (00C) |

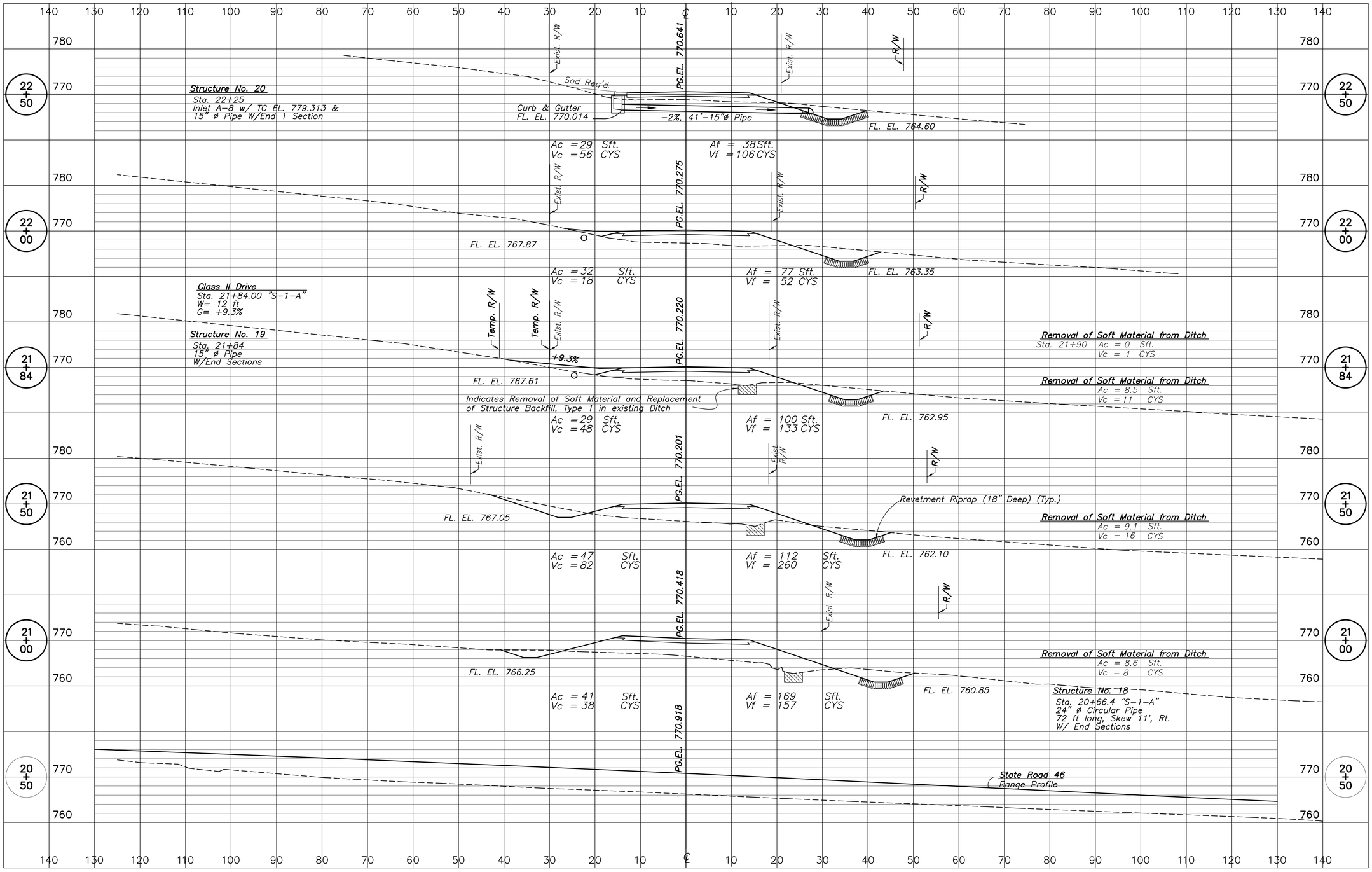


ASA Engineering Consultants, Inc.
3717 Woodview Trace
Indianapolis, Indiana 46268
(317) 334-1334

DESIGNED ASA
DRAWN JimB
CHECKED AAC
CHECKED ASA

INDIANA
DEPARTMENT OF TRANSPORTATION

ROADWAY CROSS-SECTIONS

| SCALE | BRIDGE FILE |
|---|---|
| 1" = 10'-0" | |
| LINE | DESIGNATION |
| "S-1-A" | 9467555 |
| SURVEY BOOK | SHEETS |
| | 55 of 59 |
| CONTRACT | PROJECT NO. |
| 24382 | MWP-5000 (00C) |

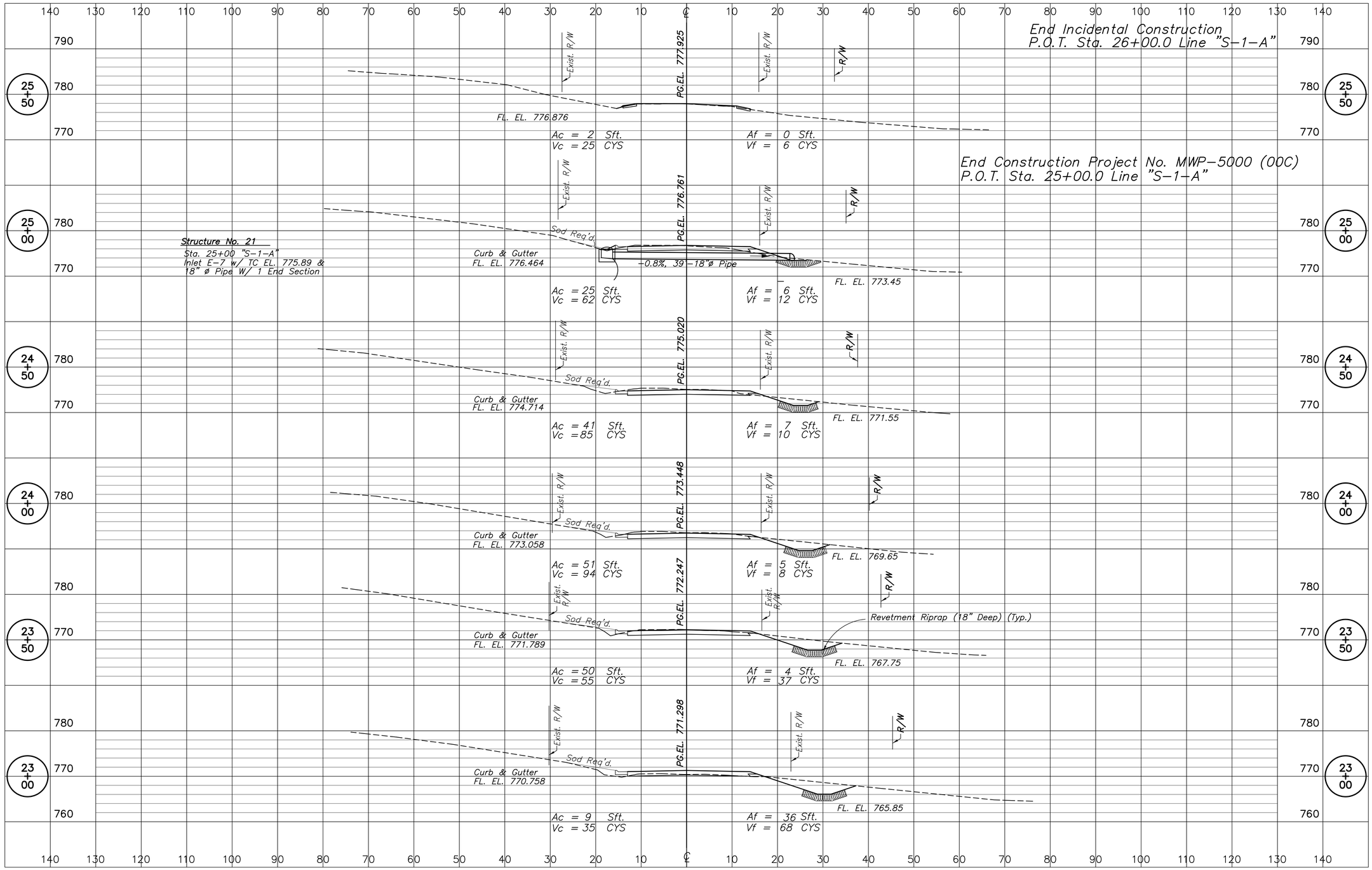



ASA Engineering Consultants, Inc.
3717 Woodview Trace
Indianapolis, Indiana 46268
(317) 334-1334


| | |
|---|---|
| DESIGNED ASA | DRAWN JimB |
| CHECKED AAC | CHECKED ASA |

INDIANA
DEPARTMENT OF TRANSPORTATION

ROADWAY CROSS-SECTIONS

| SCALE | BRIDGE FILE |
|---|---|
| 1" = 10'-0" | |
| LINE | DESIGNATION |
| "S-1-A" | 9467555 |
| SURVEY BOOK | SHEETS |
| | 56 of 59 |
| CONTRACT | PROJECT NO. |
| 24382 | MWP-5000 (00C) |

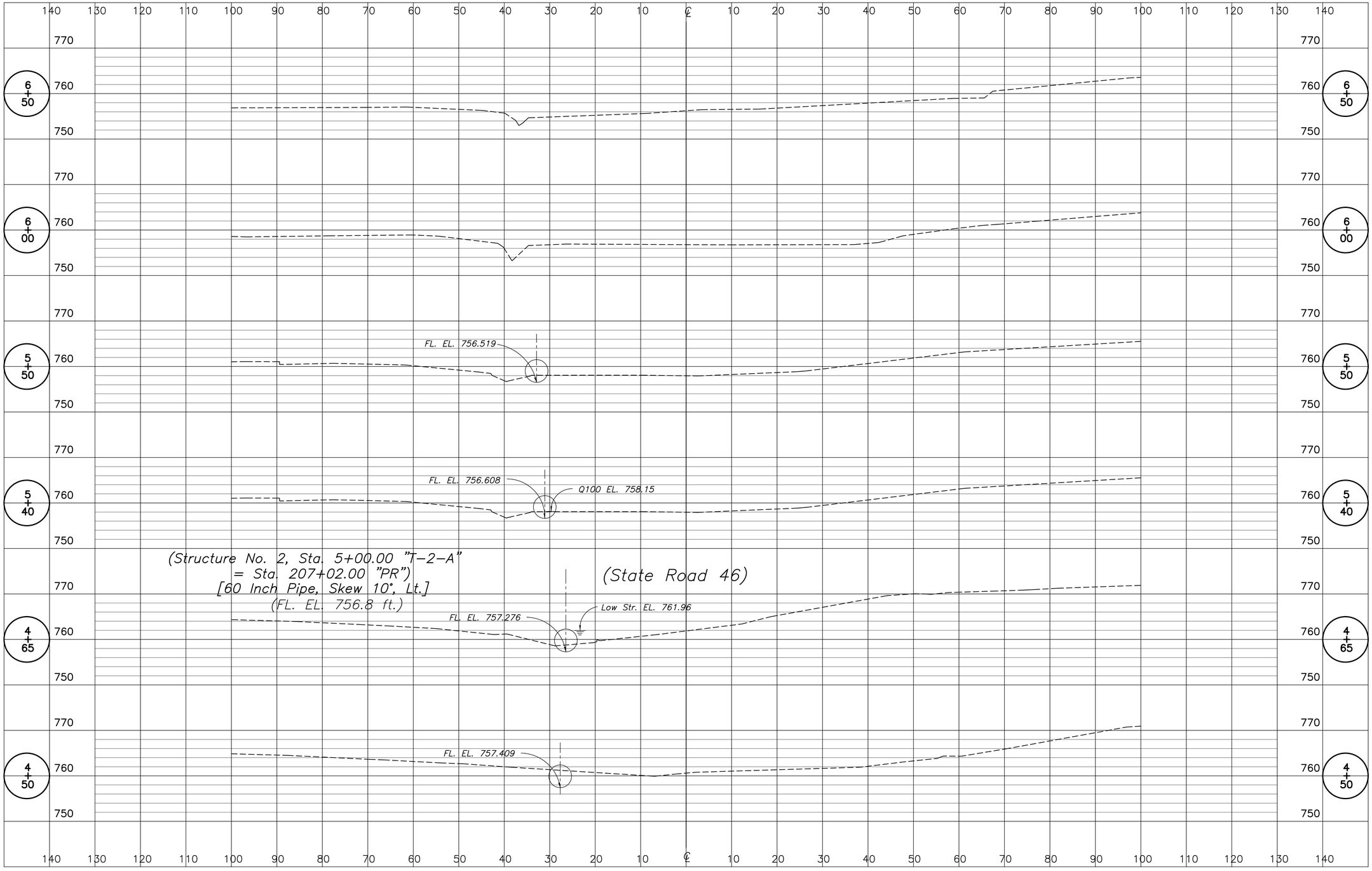


ASA Engineering Consultants, Inc.
3717 Woodview Trace
Indianapolis, Indiana 46268
(317) 334-1334

DESIGNED ASA | DRAWN SSS
CHECKED AAC | CHECKED AKS

INDIANA
DEPARTMENT OF TRANSPORTATION

WATERWAY CROSS-SECTIONS

| SCALE | BRIDGE FILE |
|---|---|
| 1" = 10'-0" | |
| LINE | DESIGNATION |
| "T-2-A" | 9467555 |
| SURVEY BOOK | SHEETS |
| | 57 of 59 |
| CONTRACT | PROJECT NO. |
| | MWP-5000 (00C) |

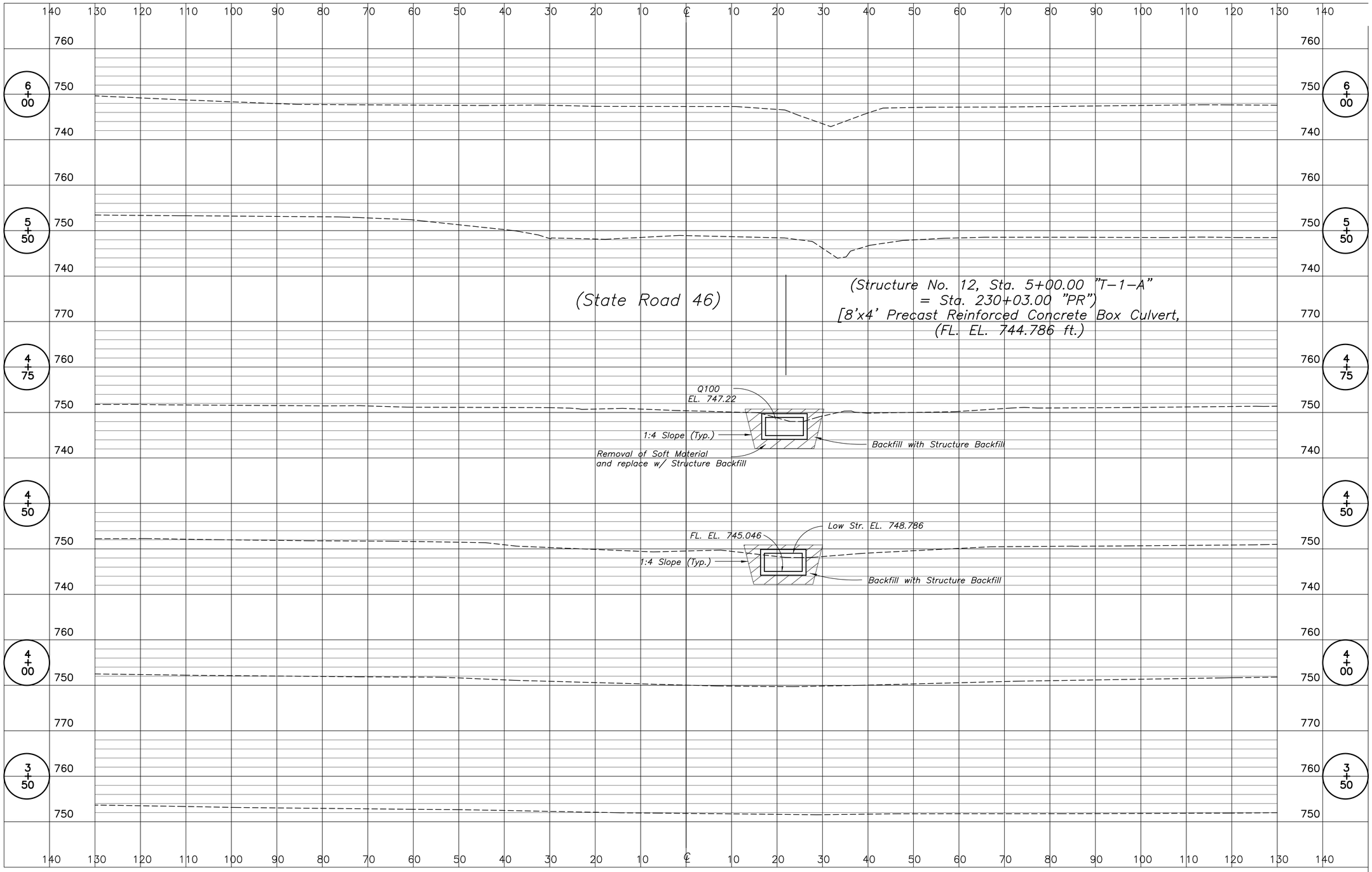


**ASA Engineering Consultants, Inc.**
3717 Woodview Trace
Indianapolis, Indiana 46268
(317) 334-1334

| | |
|---|---|
| DESIGNED ASA | DRAWN SSS |
| CHECKED AAC | CHECKED AKS |

INDIANA
DEPARTMENT OF TRANSPORTATION

WATERWAY CROSS-SECTIONS

| SCALE | BRIDGE FILE |
|---|---|
| 1" = 10'-0" | |
| LINE | DESIGNATION |
| "T-1-A" | 9467555 |
| SURVEY BOOK | SHEETS |
| | 58 of 59 |
| CONTRACT | PROJECT NO. |
| | MWP-5000 (00C) |

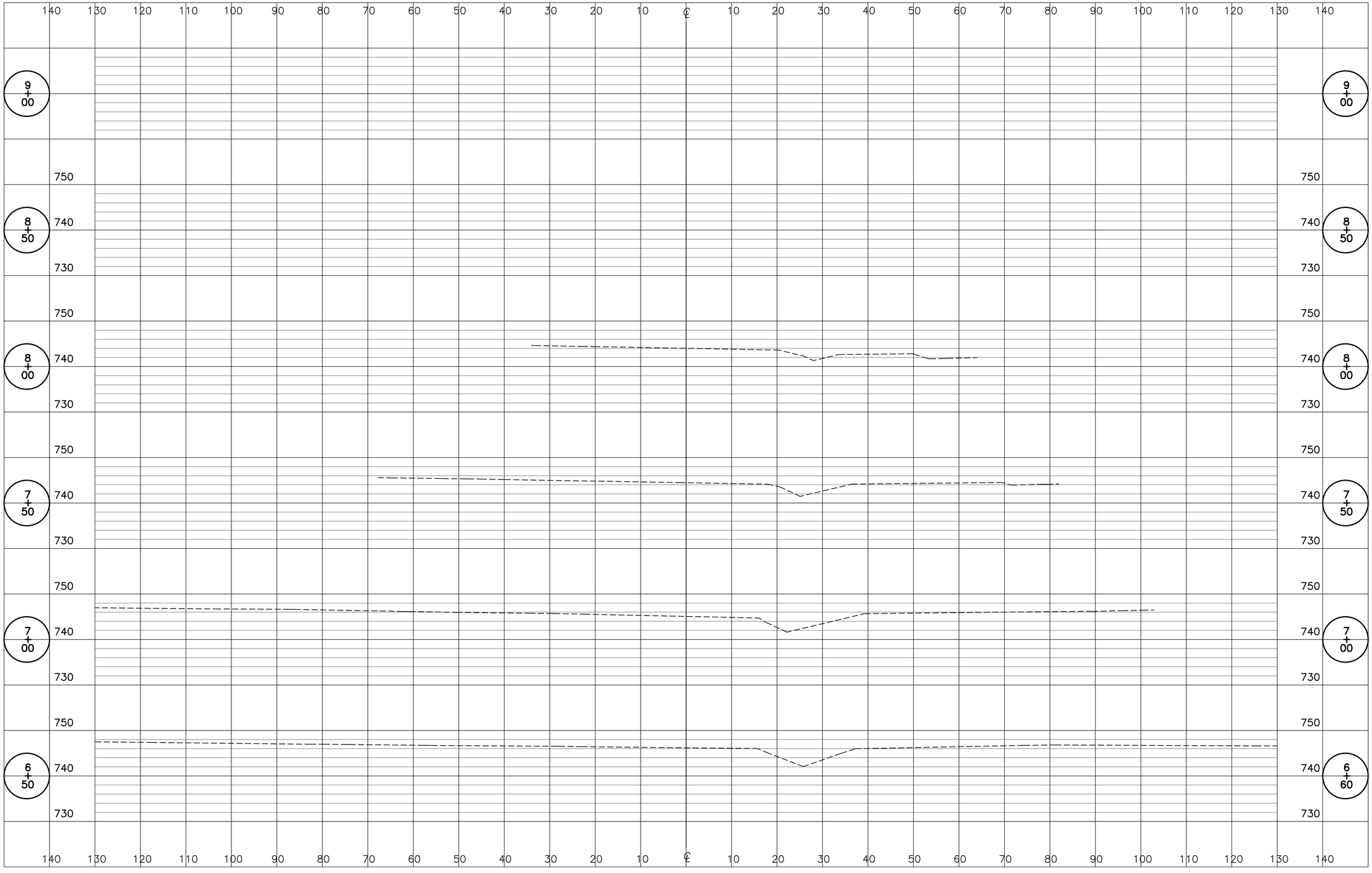


ASA Engineering Consultants, Inc.
3717 Woodview Trace
Indianapolis, Indiana 46268
(317) 334-1334

| | |
|---|---|
| DESIGNED ASA | DRAWN SSS |
| CHECKED AAC | CHECKED AKS |

INDIANA
DEPARTMENT OF TRANSPORTATION

WATERWAY CROSS-SECTIONS

| SCALE | BRIDGE FILE |
|---|---|
| 1" = 10'-0" | |
| LINE | DESIGNATION |
| "T-1-A" | 9467555 |
| SURVEY BOOK | SHEETS |
| | 59 of 59 |
| CONTRACT | PROJECT NO. |
| | MWP-5000 (00C) |