HOT MIX ASPHALT
QUALITY CONTROL PLAN

J. WOODEN CONSTRUCTION CO.
PLANT NO. 3550

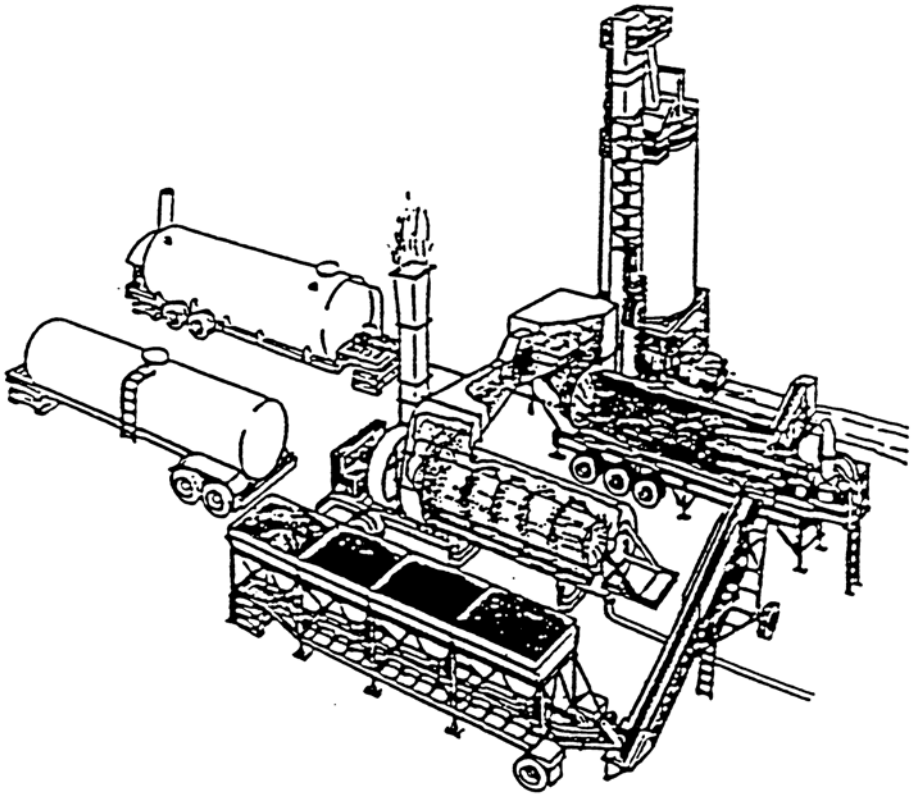

10/1/04

TABLE OF CONTENTS

SECTION 1 - PLANT LOCATION

County
Identifiable Point

SECTION 2 - ORGANIZATIONAL STRUCTURE

Management Representative
Certified Technicians

SECTION 3 - LABORATORY

Location
Equipment Calibration/Verification
Access Statement

SECTION 4 - MIXING PLANT

Plant Site Layout
Material Stockpiles
Binder
Baghouse Fines
Stabilizing Additives
Anti-Adhesive Agent
Surge Bins
Trucks

SECTION 5 - MATERIALS SAMPLING AND TESTING

Aggregate Stockpiles
Recycled Materials
Blended Aggregate
QC/QA HMA and SMA -- Plant
QC/QA HMA and SMA-- Pavement
HMA -- Plant
Binder
Temperatures
Mix Calibrations

SECTION 6 - ADDENDA

SECTION 7 - DOCUMENTATION PLAN

Control Charts
Quality Control Tests
Mixture Calibrations
Daily Diary
Documents

APPENDIX A - GENERAL INFORMATION

Plant Site Layout
Surge Bin Approval Letter

APPENDIX B - FORMS

Fines Correction
Control Chart
Daily Diary
Aggregate Gradation
Blended Aggregate Gradation
Extraction and Gradation
Maximum Specific Gravity
Superpave Specimens
Aggregate Moisture
Fines Return

APPENDIX C - ADDENDA

QCP Annex
Addenda Summary Sheet

AUTHENTICATION

SECTION 1

PLANT LOCATION

J. Wooden Construction Co., Plant No. 3550, is located in Tippecanoe county approximately 1.2 miles south of the junction of SR 43 and I-65. The address of the mixing plant is as follows:

J. Wooden Construction Co.
1207 Mackey Ln.
W. Lafayette, IN 47907

SECTION 2

ORGANIZATIONAL STRUCTURE

MANAGEMENT REPRESENTATIVE

The Management Representative for this plant will be Ron Keady of J. Wooden Construction Co. He is responsible for the administration of the Quality Control Plan and may be contacted at 317-310-1113.

QUALITY CONTROL TECHNICIANS

The Quality Control Technicians are all employees of J. Wooden Construction Co. Plant personnel may be contacted at the laboratory located at the mix plant (317-310-1115). Included below are the technicians and their responsibilities:

Bob Robinson - Bob is a Certified Asphalt Technician and his duties at the mix plant will include the following:

1. Plant calibrations for each mixture
2. Calibration of return of the baghouse fines
3. Compaction of Superpave specimens, and determination of the maximum specific gravity and bulk specific gravity
4. All tests necessary to adjust and control the mixture within the QCP requirements
5. Maintenance of control charts and daily diary
6. Stockpiling of Aggregate and RAP

Tony Dischinger - Tony will perform all tests listed as the responsibility of Mr. Robinson except for compaction of Superpave specimens, and determination of the maximum specific gravity and bulk specific gravity.

Clyde Barry Carroll - Clyde is a Certified Asphalt Technician and will be available when Mr. Robinson is not at the mixing plant.

PLANT OPERATOR

The plant operator will be responsible for the following:

1. The handling procedures for the binder
2. Loading of the cold bins
3. The use of the anti-adhesive agent
4. Loading the mixture into the trucks
5. Sealing the surge bins for extended storage

SECTION 3

LABORATORY

A field laboratory, consisting of a 12' x 48' trailer owned by J. Wooden Const. Co., will be provided at the plant site. The location of the lab is indicated on the plant site layout in Appendix A.

EQUIPMENT CALIBRATION/VERIFICATION

The testing equipment calibrations/verifications are on file at the field laboratory and are available for inspection. A list of the equipment, calibration/verification procedure, and frequency are as follows:

Equipment	Model	Procedure	Minimum Frequency
Balance	IP-65	ITM 910	12 mo
Balance	EP-12KB	ITM 910	12 mo
Gyratory Compactor	4140	ITM 908	1 mo.
Gyratory Compactor Internal Angle	4140	AASHTO PP48	12 mo.
Ignition Oven	323	Operators Manual	12 mo.
Mechanical Shaker	PS-3	ITM 906	12 mo.
Mechanical Shaker	PS-12	ITM 906	12 mo.
Oven	21-350-3	ITM 903	6 mo.
Sieves	---	ITM 902	6 mo.
Thermometer	---	ITM 909	6 mo.
Vacuum Pump	S035	ITM 905	12 mo.
Volumetric Flask	AFVP7	AASHTO T 209	1 mo.

ACCESS STATEMENT

The laboratory will be accessible to INDOT personnel during production. On non-production days, access to the laboratory will be available if J. Wooden Const. Co. personnel are at the plant.

SECTION 4

MIXING PLANT

PLANT SITE LAYOUT

The plant site layout indicating the stockpile area, binder tanks, fuel tank, anti-adhesive supply, field laboratory, visitor parking area, and the major components of the mixing plant is included in Appendix A.

MATERIAL STOCKPILES

Stockpiling of aggregates and RAP is done by unloading dump truck loads side by side and then stacking the material only as high as the front-end loader can place the material. Stockpiles will be sufficiently separated to avoid contamination. The size and type of aggregate of each stockpile will be identified by signs placed in the area of the stockpiles.

The entire front face of each stockpile will be worked by a front-end loader from side to side when charging the plant. The sides of the face will be mixed with the center of the face and the existing yard material will not be included in the bucket. The cold bins shall be loaded such that material from one bin will not contaminate another bin.

BINDER

The following procedures for use of PG binders will be followed:

1. Each tank containing a PG binder will be labeled. The sampling valves are located in the tanks.

2. Each tank will be inspected to ensure there is not an unusual amount of build-up of insoluble matter in the tank.

3. If a tank is used for a different grade of PG binder or another source of the same grade of PG binder, then complete drainage of the tank will be done before switching.

4. The pump protection screen will be routinely inspected to ensure proper flow of the binder.

5. The storage temperature and additional special handling requirements from the binder supplier will be followed. These instructions will be maintained at the plant control station.

BAGHOUSE FINES

Baghouse fines will be returned to all mixtures. The fines return system will be calibrated before production of any mixtures by collecting and weighing the fines at various control settings of the pump. A graph of the control setting versus tons per hour will be plotted and maintained at the plant laboratory.

STABILIZING ADDITIVE

The stabilizing additive used for SMA mixtures will be fibers. The procedure for adding the fibers to the mixture will be to blow the fibers into the drum through a line placed beside the binder line and merged into the mixing head. A machine supplied by the manufacturer will be used to blow the fibers into the drum and control the rate of feed.

ANTI-ADHESIVE AGENT

The anti-adhesive agent for the truck beds will be a product on the INDOT Approved List of Anti-Adhesive Agents.

The anti-adhesive agent will be applied to the trucks at the plant prior to loading. Application will be made by a spray bar with enough material to adequately cover the surface area of the sides and bottom of the truck. Any excess material that accumulates in the truck bed will be removed by raising the truck bed before loading.

SURGE BINS

The plant is equipped with 300 t Astec New Generation silo bins which have been approved for storage for a period of up to and including 72 hours. (See approval letter in Appendix A). Seals for long term storage will be visually checked and cleaned as required before use. A low level bin indicator system with an audible alarm is in place to alert the plant operator when the level of mixture in the surge bin has fallen below the top of the cone.

TRUCKS

Small trucks will be loaded from the surge bin in 3 dumps of approximate equal weights with the first dump being in the very front of the truck bed, the second dump being to the rear of the truck, and the last dump being in the middle of the truck.

Semitractor trailer trucks will be loaded from the surge bin in 5 dumps of approximate equal weights. The first dump will be in the very front of the truck and the second dump will be in the rear of the truck. The space between the first two drops will be filled with the remaining 3 dumps.

SECTION 5

MATERIALS SAMPLING AND TESTING

AGGREGATE STOCKPILES

Location of Sample: Aggregate stockpile at HMA plant

Sampling Procedure: ITM 207

Sampling Reduction: AASHTO T 248, except the riffle openings will be approximately two times larger than the largest particles in the sample.

Sample Size

Nominal Maximum Particles Size	Minimum Weight of Sample (g)
3/8 in.	4000
1/2 in.	6000
3/4 in.	6000
1 in.	6000

Gradation: AASHTO T 27

Testing Frequency: A minimum of one test for each 1000 t of each coarse aggregate size

RECYCLED MATERIALS

Location of Sample: Recycled material stockpile

Sampling Procedure: ITM 207

Sample Reduction: AASHTO T 248, except the riffle openings will be approximately two times larger than the largest particles in the sample.

Sample Size

Nominal Maximum Particle Size	Minimum Weight of Sample (g)
3/8 in.	4000
1/2 in.	6000
3/4 in.	6000
1 in.	6000

Moisture Content	ITM 572
Binder Content	ITM 571
Fines Correction	The amount of fines will be determined on the first sample of each stockpile of recycled material by a high speed centrifuge and a correction factor applied to each subsequent test.
Gradation	AASHTO T 27
Coarse Aggregate Angularity	ASTM D 5821
Testing Frequency	A minimum of one test for each 1000 t of recycled material

BLENDED AGGREGATE

Location of Sample	Cold feed belt
Sampling Procedure	A template of approximately three feet in length will be placed on the stopped belt and all material between the end plates swept into a container.
Sample Reduction	AASHTO T 248, except the riffle openings will be approximately two times larger than the largest particles in the sample.

Sample Size

Mixture	Minimum Weight (g)
9.5 mm	1500
12.5 mm	2000
19.0 mm	3000
25.0 mm	4000
OG 19.0 mm	3000
OG 25.0 mm	4000

Moisture Content	AASHTO T 255
Gradation	AASHTO T 27
Testing Frequency	A minimum of one test for each 2000 t of base or intermediate mixture and each 1200 t of surface mixture.

QC/QA HMA and SMA -- PLANT

Sample Procedure — ITM 580 -- Truck Sample

Sample Reduction — ITM 587

Sample Size

Mixture	Minimum Weight of Sample (g)
9.5 mm	1500
12.5 mm	2000
19.0 mm	3000
25.0 mm	4000
OG 19.0 mm	3000
OG 25.0 mm	4000

Moisture Content — ITM 572

Binder Content — ITM 571

Fines Correction — The amount of fines will be determined on each sample by a high speed centrifuge.

Coarse Aggregate Angularity — ASTM D 5821

Draindown (Open Graded and SMA only) — ASTM D 6752

Testing Frequency — A minimum of one test for each 2000 t of base and intermediate mixtures and each 1200 t of surface mixture produced, except for the draindown test which will be conducted once per lot for each contract the mix is supplied to.

QC/QA HMA and SMA -- PAVEMENT

Sampling Procedure — ITM 580 -- Plate Sample

Sample Size — Superpave specimens -- specimens will have a height of 110-120 mm after compaction to N_{des} for dense graded mixtures and SMA, and N_{100} for open graded mixtures. Specimens not within this requirement will be discarded and another sample immediately obtained.

Maximum Specific Gravity

Mixture	Minimum Weight of Sample (g)
9.5 mm	1000
12.5 mm	1500
19.0 mm	2000
25.0 mm	2500
OG 19.0 mm	2000
OG 25.0 mm	2500

Binder Content

Mixture	Minimum Weight of Sample (g)
9.5 mm	1500
12.5 mm	2000
19.0 mm	3000
25.0 mm	4000
OG 19.0 mm	3000
OG 25.0 mm	4000

Superpave Specimens — AASHTO T 312.

Bulk Specific Gravity — AASHTO T 166 (Dense Graded and SMA)

ASTM D 6752 (Open Graded). Exceptions to this procedure shall be as follows:

1. The duration of the test from initiating the vacuum extraction to weighing the specimen after removal from the water bath and bag will not exceed 5 minutes.
2. The weight of water absorbed by the specimen while in the water bath will be subtracted from the weight of specimen in the water bath.
3. Any test in which the weight of water absorbed by the specimen exceeds 2% of the sample weight shall be considered invalid.

Maximum Specific Gravity — AASHTO T 209 -- weighing-in-water method

Actual Binder Content — ITM 571. The actual binder content is calculated by adding the binder absorption from the DMF and the binder content determined from ITM 571.

Moisture Content (Surface Mixture only) — ITM 572

Testing Frequency — A minimum of one moisture content, binder content, air voids and VMA determination for the first 1000 t and each subsequent 2000 t for each base or intermediate mixture. A minimum of one moisture content, binder content, air voids and VMA determination for the first 600 t and each subsequent 1200 t for each surface mixture.

HMA -- PLANT

Sample Procedure — ITM 580 -- truck sample

Sample Reduction — ITM 587

Sample Size — Superpave specimens -- specimens will have a height of 110-120 mm after compaction to Ndes. Specimens not within this requirement will be discarded and another sample immediate obtained.

Maximum Specific Gravity

Mixture	Minimum Weight of Sample (g)
9.5 mm	1000
12.5 mm	1500
19.0 mm	2000
25.0 mm	2500
OG 19.0 mm	2000
OG 25.0 mm	2500

Binder Content

Mixture	Minimum Weight of Sample (g)
9.5 mm	1500
12.5 mm	2000
19.0 mm	3000
25.0 mm	4000
OG 19.0 mm	3000
OG 25.0 mm	4000

Superpave Specimens	AASHTO T 312
Bulk Specific Gravity	AASHTO T 166
Maximum Specific Gravity	AASHTO T 209 -- weighing-in-water procedure
Actual Binder Content	ITM 571. The actual binder content is calculated by adding the binder absorption from the DMF and the binder content determined from ITM 571.
Coarse Aggregate Angularity (CAA)	ASTM D 5821
Gradation	AASHTO T 30
Testing Frequency	A minimum of one moisture content, binder content, CAA, and air voids determination for the first 250 t and each subsequent 1000 t for each DMF or JMF for base and intermediate mixtures. A minimum of one moisture content, binder content, CAA, and air voids determination for the first 250 t and each subsequent 600 t for each DMF for JMF for surface mixtures.

BINDER

The PG binder will be sampled from the sampling valve located in the tank

TEMPERATURES

Temperatures of the mixture at the plant will be recorded at a frequency of 1 per 2 hours of production and will be taken from the trucks with a stem thermometer.

MIXTURE CALIBRATIONS

The cold feed calibration process is automated. The cold feed bins and RAP bins are calibrated by switching to the calibration mode and then running material across the previously calibrated main belt weigh bridge and RAP belt weigh bridge respectively. Blend percentages are directly entered into the computer for each mixture. Blend percentages are calculated from stockpile gradations. Mixture calibrations will be available before production and any adjustments during production will be documented and available at the plant laboratory.

SECTION 6

ADDENDA

Each page in the QCP that is revised will have the Plant number, date of revision, and a vertical line in the left margin indicating the paragraph that was revised.

Revisions to the QCP will be maintained on an Addenda Summary Sheet or QCP Annex in the Appendix until such time that the revisions are incorporated into the QCP. Addenda will be submitted at the close-out meeting for an annual audit. Any outstanding revisions will also be submitted in January of each year.

SECTION 7

DOCUMENTATION PLAN

CONTROL CHARTS – QC/QA HMA and SMA

Control charts will be as is shown in Appendix B. Charts will be maintained in a three-ring binder in the plant lab and test results will be recorded the same day the tests are conducted. Individual test values and the moving average of the last 5 values will be plotted on each chart using the procedure in accordance with ITM 583. All control charts will be retained on file at the plant lab for 3 years. The following mixture properties will be charted:

1. Binder Content of mixture

2. Air Voids

3. VMA

QUALITY CONTROL TESTS

Quality control tests will be conducted as stated in the QCP and completed within two working days of the time the sample will be taken. All test results will be on file at the plant lab for a period of three years.

MIXTURE CALIBRATIONS

Mixture calibrations will be conducted as stated in the QCP and maintained at the plant laboratory.

DIARY

The diary will be an open format book with one page devoted to each day that mixture is produced and all the pages will be in a three-ring binder. The diary will be maintained at the plant lab and will be retained for 3 years. Entries in the diary will include the following:

1. The quantity of mixture produced, DMF or JMF number, and the contract number or purchase order the mixture was sent to.

2. The time that the samples were obtained and the time the tests were completed.

3. Nonconforming tests and the resulting corrective action.

4. Any significant events or problems.

DOCUMENTS

1. ITM 583.

2. INDOT Standard Specifications and current Supplemental Specifications.

3. Indiana Hot Mix Asphalt Quality Assurance Certified Technician Program Manual.

4. All test methods referred to in the QCP.

5. Mix designs, DMF, and JMF for each mixture.

6. QCP for Plant No. 3550.

7. Annual calibration of plant scales and verification of meters.

8. Stabilizing additive certifications from manufacturer.

9. Instructions from manufacturer concerning storage and handling of stabilizing additives.

10. Bill of ladings from ASC Producers for the most current date of shipment.

11. Handling requirements of PG binders from material sources.

12. Baghouse fines calibration.

13. Temperature recordation charts of the mixture.

14. Plant site layout.

APPENDIX A

GENERAL INFORMATION

J. Wooden Const. Co.
1207 Mackey Ln.
W. Lafayette, IN
Plant No. 3550

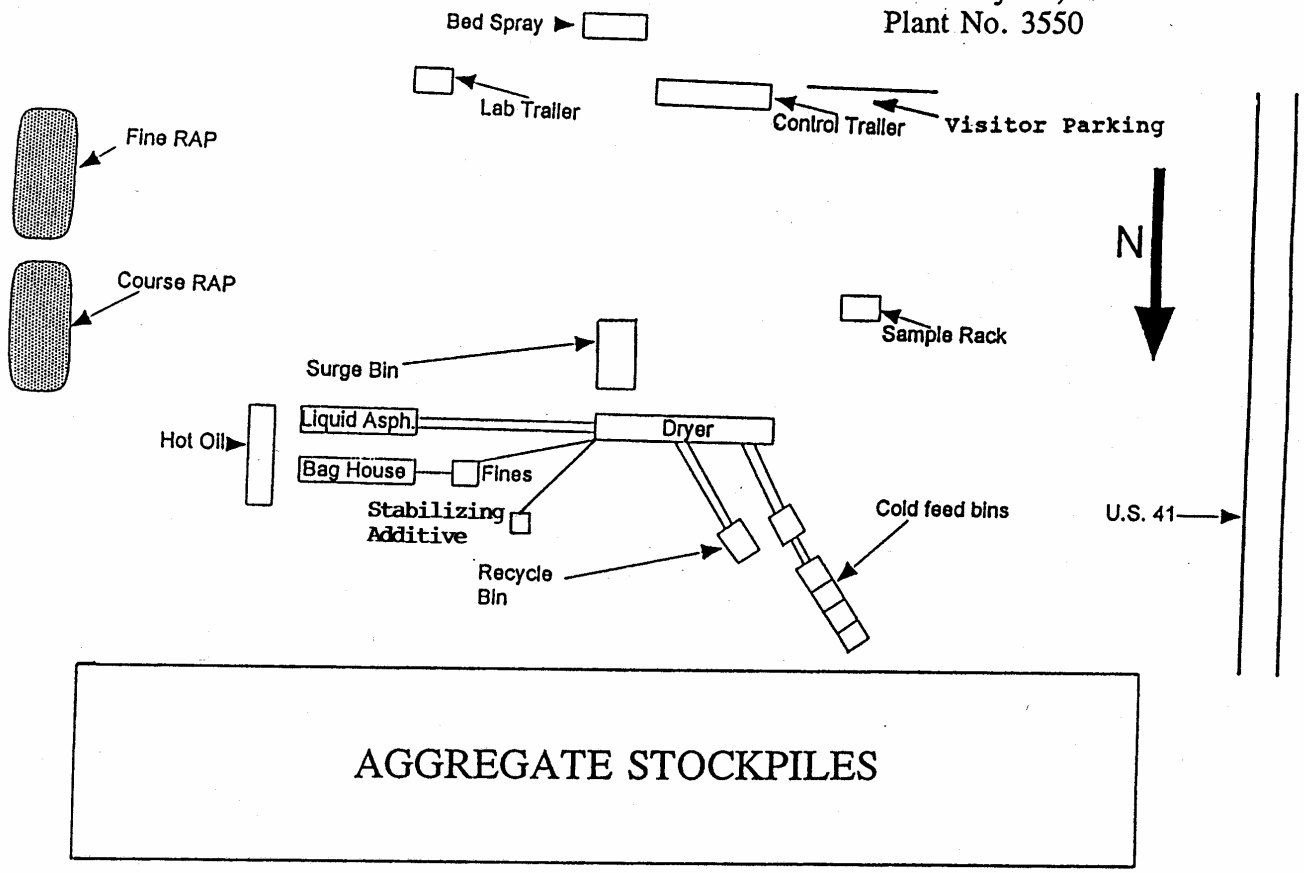

A. D. 114

INDIANA DEPARTMENT OF TRANSPORTATION

INDIANAPOLIS, INDIANA 46204-2249

INTER-DEPARTMENT COMMUNICATION

June 23, 1996

MEMORANDUM

TO: District Construction Engineers

D. Carpenter
J. Keefer
D. Eastin
J. Fischbacher
T. Listerman
M. Fowler

ATTN: District Materials & Tests Engineers

K. Sommer
M. Maggart
M. Miller
L. Randell
D. Hamilton
E. Sturgeon

FROM: R. K. Smutzer, P.E.
Chief, Materials & Tests Division

SUBJ: ASTEC, New Generation Silo

Testing has recently been completed on a New Generation silo from ASTEC for overnight storage of bituminous mixtures. The silo has a storage capacity of 300 tons, and is fully insulated with cone heat only. The ASTEC method of an oil seal is used on the discharge gate, and a grease seal is used at the top of the bin.

Based on the test results, the acceptance of the storage bin owned by J. Wooden Const. Co. in W. Lafayette, IN (#3550) will be allowed for a period of up to and including 72 hours.

RKS/CTL/rs

c: File

APPENDIX B

FORMS

FINES CORRECTION

PLANT NUMBER AND LOCATION

TYPE OF MIX

QA	NON-Q	BLEND

DATE

SOLVENT USED

AGGREGATE USED IN MIX

MATL SIZE	SOURCE CODE				SOURCE NAME AND LOCATION

REMARKS

FINES RECOVERY		
	CUP A	CUP B
CUP FULL		
CUP		
FINES		
TOTAL FINE		
FINES CORRECTION		
NOTIFIED		
OPERATOR		

SUBMITTED BY

TITLE

PHONE NUMBER

PROCESS CONTROL CHART

PARAMETER _____ PLANT _____ # _____ MONTH / YEAR _____

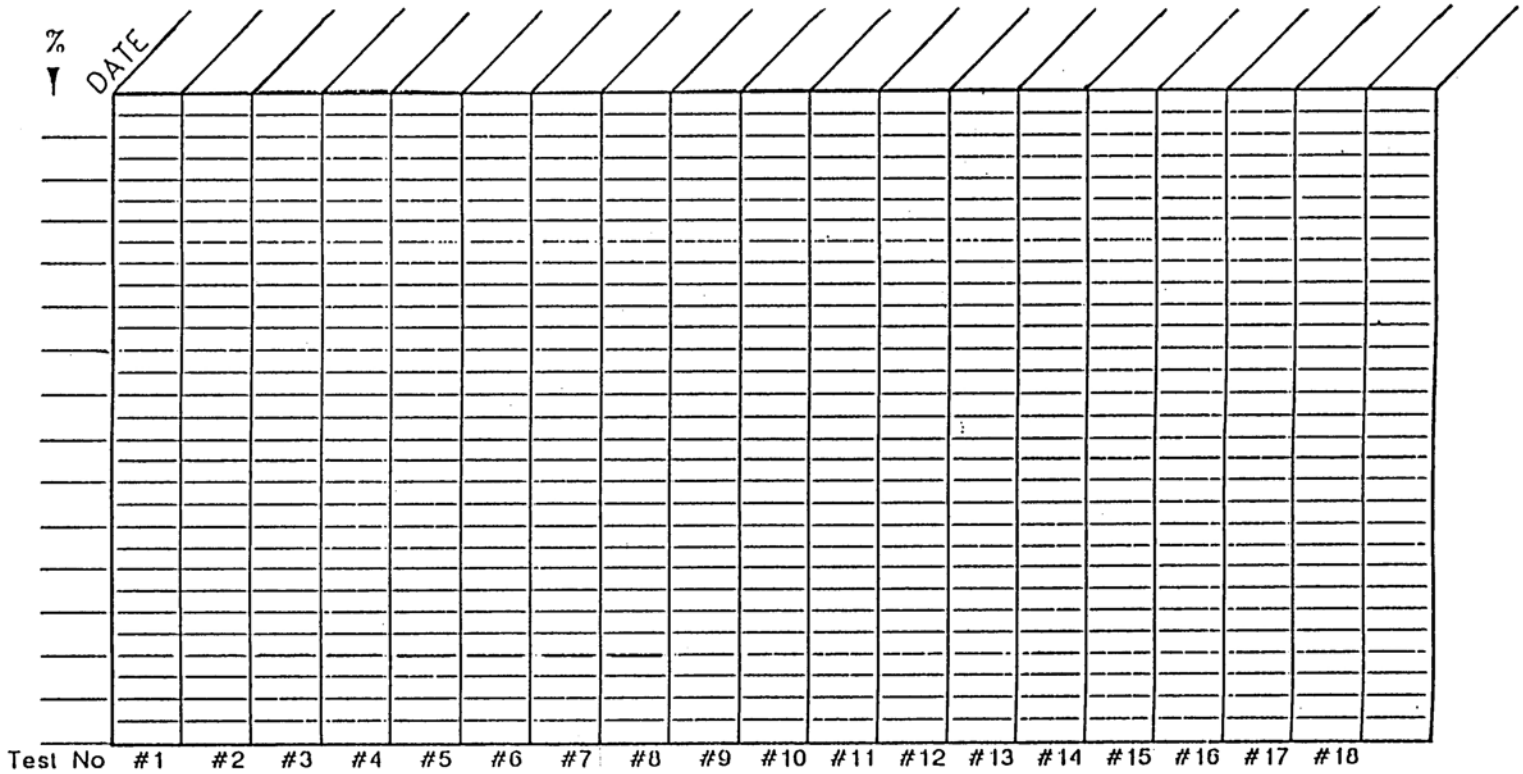

EXPLANATION OF SYMBOLS

- PRODUCTION DATA
- 5-POINT MOVING AVERAGE
- TARGET MEAN
- CONTROL LIMITS

DAILY DIARY

PLANT NO._____ DATE_____

LOCATION_____ CONTRACT_____

MIX	LOCATION	Sample By	JMF

MIX TEMPERATURE		MIX MOISTURE		PLANT INFORMATION		MAGAGRAME
TIME	TEMPERATURE	'TIME	MG	STARTED	STOP	TODAY MG
				1st LOAD TIME	TK#	JOB MG
				NO. OF TRUCKS		JMF MG
				WEATHER #		(# 1- CLEAR) (# 2 OVERCAST)
				EVENTS		PROBLEMS
				NON - CONFORMING TEST		SOLUTIONS
				REMAKS:		
		MOISTURE	%			

(1-BIN SAMPLE) (2-EXTRACTION) (3- GRYOTORY) (4- MAX)

TEST	LOT	MG SAMPLED	TIME STARTED	TIME FINISHED

BINDER		INDOT AT PLANT	
SUPPLIER		'TIME	
GRADE -PG	# LOADS	'MAX AND SPECIMENS	
SAMPLE BY		LOT	SUBLOTS
AM TIME	TANK	A/C SAMPLES #	CANS
PM TIME	TANK	OTHER	
AM		AM	

Test # _____ **Aggregate Gradation Test Results**

Date _____ **Material _____** **Sampled At _____**

Time _____ **Source _____** **Sampled By _____**

Wet Weight **_____**

Dry Weight **_____** **Percent Moisture _____**

Weight After Decant_____ **Percent Decant _____**

SIEVE SIZE	GRAMS RETAINED	GRAMS PASSING	PERCENT PASSING	SPECIFICATION
2 in.				
1 1/2 in.				
1 in.				
3/4 in.				
1/2 in.				
3/8 in.				
No. 4				
No 8				
No. 16				
No. 30				
No. 50				
No. 100				
No. 200				
Pan		% Error =		

Test # _____ **Blended Agg. Gradation Test Results**

Date _____ **Mix _____** **Lot _____ Sublot _____**

Time _____ **Contract _____** **Sampled By _____**

Wet Weight **_____**

Dry Weight **_____** **Percent Moisture _____**

Weight After Decant_____ **Percent Decant _____**

SIEVE SIZE	GRAMS RETAINED	GRAMS PASSING	PERCENT PASSING	JMF
2 in.				
1 1/2 in.				
1 in.				
3/4 in.				
1/2 in.				
3/8 in.				
No. 4				
No 8				
No. 16				
No. 30				
No. 50				
No. 100				
No. 200				
Pan		% Error =		

MIX EXTRACTION-GRADATION WORKSHEET

PLANT NO._____ DATE_____

LOCATION_____ CONTRACT_____

MIX	JOB LOACTION	JMF		FILER INF0		EXT AGG DRYBACK	
MATERIALS	SOURCE %	LOT SUBLOT		FILTER &		15=	60=
BINDER PG-		TK # TEMP		FINES WT.		30=	75=
COARSE AGG.		MG SAMPLE		FILTER WT		45=	90=
FINE AGG.		TIME AM PM		FINES WT.		EXT AGG WT	
MISC. AGG.		SIVE SIZE	WEIGHT RETAINED	WEIGHT PASSING	PERCENT PASSING	JMF REQUIRED	HMA REQUIRED
RAP YES NO							
MIXTURE COMPOSITION	EXTRACTION TEST	37.5mm	.	.	.		
HOT BATCH %	STARTED FINISHED	25.0mm	.	.	.		
BIN WT BIN	ORIGINAL WT	19.0mm	.	.	.		
1 -	15MIN	12.5mm	.	.	.		
2 -	30MIN –	9.5mm	.	.	.		
3 -	CONSTANT WT	4.75mm	.	.	.		
4 -	FINES &EXT AGG WT	2.36mm	.	.	.		
RAP-	F/C FACTOR X PAN =	1.18mm	.	.	.		
T-AGG	TOTAL AGG WT	600uM	.	.	.		
BIT	EXT BINDER %	300uM	.	.	.		
BCH WT	JMF BINDER %	150uM	.	.	.		
COMMENTS:	MOISTURE %	75uM	.	.	.		
		PAN	.	.	.		
		TOTAL RET	.	.	.		
		PAN&FINES	.	.	.		
		CR CONTENT	/ : %			%	%

SIGNATURE _____ _____

PRINT NAME _____ _____

GYRATORY-SUPERPAVE WORKSHEET

CONTRACT_____ LOT_____SUBLOT_____

MIX_____ DMF/JMF_____

TEMPERATURERECORD	Gmb MASS	Gmb MASS	MAX SPECIFIC GRAVITY			
COMPACTION TEMP.	SPECIMEN #1	SPECIMEN #2	SAMPLE#			
MIX TEMP.	'IN AIR WT.	IN AIR WT.	A - Wt. of mix			
BINDER CONT. %	SSD WT.	SSD WT.	D - flask cal. wt.			
Pa Gsb	WATER WT.	WATER WT.	E - flask+mix+water			AVG.
	Gmb @ N-max	Gmb @ N-max	GMM - A/(A+D-E)			
GYRATIONS	AVERAGE OF GMB		% GMM (corr)			
N-ini N-des N-max	Gmb @ N-max		@ N- ini			
	Gmb corrected @ N-des		@ N-des			
	Gmb corrected @ N-ini		@ N-max			
GYRATION HEIGHT						
#1 GYR HEIGHT %of N-max	VMA					
#1N-ini	VMA @ N-des					
#1N-des	AIR VOIDS					
#1N- max	AIR VOIDS @ N-ini					
#2GYR HEIGHT %of N-max	AIR VOIDS @ N-des					
#2N-ini	AIR VOIDS @ N-max					
#2N-des	VFA					
#2N-max	VFA @ N-des					

SIGNATURE _____

PRINTED NAME _____

INDIANA DEPARTMENT OF TRANSPORTATION

State Form 15093(R2/8-96)

RICE DETERMINATION OF MAXIMUM SPECIFIC GRAVITY

Lab No._____ Type of Mixture _____

Contract No._____ Lot –Sublot _____

(Pb)	Binder Content, %			
(A)	Dry Mass of Mix, g			
(A1)	SSD Mass of Mix, g			
(B)	Mass Bowl in Water, g			
(B1)	Mass Bowl + Mix in Water, g			
(C)	Mass Mix in Water (B1-B)			Avg. *
(Bowl)	Max. Sp. Gravity, A/(A-C) or A/(A1-C)			
(D)	Mass Flask Filled with Water, g			
(E)	Mass Flask Filled with Water + Sample, g			Avg. *
(Flask)	Max. Sp. Gravity, A/(A + D-E) or A/(A1 + D-E)			

CALCULATIONS

Gse = (100 - Pb) / ((100/Max. Sp. Gr.) - (Pb/Gb))

(Pmm)	Total Mixture, %	100	100	100	100	100
(Ps)	Aggregate Content, %					
(Pb)	Binder Content, %					
(Gb)	Apparent Sp. Gr. of Binder					
(Gse)	Effective Sp. Gr. of Aggregate					
(F)	(Ps/Gse)					
(G)	(Pb/Gb)					
(H)	(F + G)					
(Gmm)	Max. Sp. Gr. of Mixture (Pmm/H)					

V.M.A.

Gsb = Ps / ((CA%/Gca + (FA%/Gfa) + (RAP%/GseRAP))

(Pb)	Binder Content, %					
(Ps)	Aggregate Content, %					
(Gsb)	Bulk Sp. Gr. of Aggregate					
(Gmb)	Avg. Bulk Sp. Gr. of Mixture					
(I)	(Gmb / Gsb) x Ps					
(VMA)	100 - 1					

* Two Maximum Specific Gravities of the Mixture shall be determined and averaged.

Signed _____

DATE	Bin #	Type of Aggregate	% Moisture	Gate Setting	Frequency # or Maximum TPH	Calibrated By:

Fines Return Calibration Chart

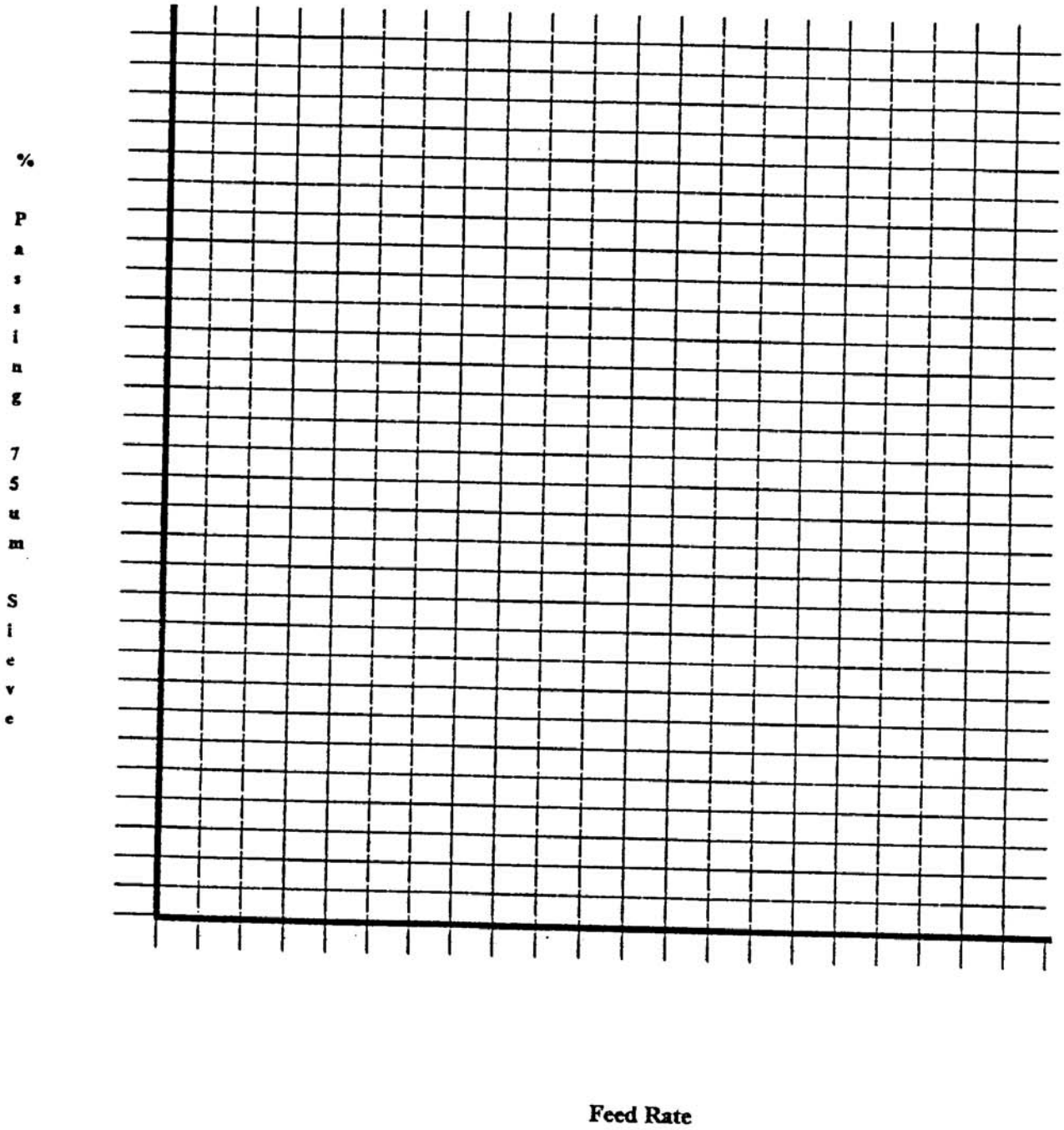

APPENDIX C

ADDENDA

HMA QCP ANNEX

Company _____

Plant No. _____

PLANT MAJOR COMPONENT REVISION

Revision: _____

_____

_____

CERTIFIED ASPHALT TECHNICIAN REVISION

Delete Technician from QCP _____

Add Technician to QCP _____

PLANT MOVEMENT

Existing Location: _____

_____

New Location: _____

_____

_____

_____	_____	_____	_____
DMTE	Date	Management Representative	Date

ADDENDA SUMMARY SHEET

AUTHENTICATION

APPROVAL	SUBMISSION
_____	_____
Chief, Materials & Tests Division	Management Representative
	_____
	Corporate Title
_____	_____
Date of Approval	Date of Submission