Structural Load Rating Calculations

Volume 4

Section 4.0 to 4.11

CLINE AVENUE BRIDGE

S.R. 912 OVER THE INDIANA HARBOR CANAL
AT EAST CHICAGO, INDIANA
LAKE COUNTY

Prepared by:

URS

OCTOBER, 2009

URS

Job: Cline Avenue Load Rating
Item: Calculation Index
File: V:\Projects\Cline Avenue\Calc Index\[Calculation_Index.xls]Index

		Number of Pages	Designed	Checked
Volume 1	**1 General**			
	1.1 Introduction	1	TSP	RBA
	1.2 Rating Report	72	TSP	RBA
	1.3 Design Criteria	25	RBA	DEM
	1.4 Inspection Reports	313	INDY	N/A
	1.5 QA/QC Summary (ITR)			
	2 Longitudinal Analysis			
	2.1 Design Criteria and Parameters	1	DEM	IC by PT
	2.2 Bridge Geometry	3	DEM	IC by PT
	2.2.1 Mainline	48	DEM	IC by PT
	2.2.2 Ramps	19	DEM	IC by PT
	2.2.3 Piers	3	DEM	IC by PT
	2.3 Material Properties	1	DEM	IC by PT
	2.3.1 Concrete	-	DEM	IC by PT
	2.3.2 Reinforcement	-	DEM	IC by PT
	2.3.3 Post-Tensioning	-	DEM	IC by PT
	2.4 Section Properties	1	DEM	IC by PT
	2.4.1 Mainline	20	DEM	IC by PT
	2.4.2 Ramps	8	DEM	IC by PT
	2.4.3 Piers	1	DEM	IC by PT
	2.5 Loads			
	2.5.1 Dead Loads	1	DEM	IC by PT
	2.5.2 Superimposed Dead Loads	1	DEM	IC by PT
	2.5.3 Live Loads	2	DEM	IC by PT
	2.5.3.1 Number of Design Lanes	-	DEM	IC by PT
	2.5.3.2 Multiple Presence Factor	-	DEM	IC by PT
	2.5.3.3 Dynamic Load Allowance	-	DEM	IC by PT
	2.5.3.4 Application of Live Load	-	DEM	IC by PT
	2.5.4 Creep and Shrinkage	1	DEM	IC by PT
	2.5.5 Temperature	1	DEM	IC by PT
	2.5.5.1 Uniform Temperature Change	-	DEM	IC by PT
	2.5.5.2 Temperature Gradient	-	DEM	IC by PT
	2.5.6 Post-Tensioning Geometry	1	DEM	IC by PT
	2.5.6.1 Mainline	117	DEM	IC by PT
	2.5.6.2 Ramps	34	DEM	IC by PT
	2.5.7 Post-Tensioning Stressing Forces	21	DEM	IC by PT
	2.6 Erection Sequence	3	DEM	IC by PT
Volume 2	**3 Longitudinal Rating**			
	3.1 Global Rating Summary	1	TSP	IC by DEM
	3.2 Mainline Segment 1 Girder 1 Rating			
	3.2.1 Rating Summary	1	TSP	IC by DEM
	3.2.2 Strength I Flexure	3	TSP	IC by DEM
	3.2.3 Strength I Shear	20	TSP	IC by DEM
	3.2.4 Service I Flexure (Service Stresses)	3	TSP	IC by DEM
	3.2.5 Service I Principal Stresses	2	TSP	IC by DEM
	3.3 Mainline Segment 1 Girder 2 Rating			
	3.3.1 Rating Summary	1	TSP	IC by DEM
	3.3.2 Strength I Flexure	3	TSP	IC by DEM
	3.3.3 Strength I Shear	20	TSP	IC by DEM
	3.3.4 Service I Flexure (Service Stresses)	3	TSP	IC by DEM
	3.3.5 Service I Principal Stresses	2	TSP	IC by DEM
	3.4 Mainline Segment 1 Girder 3 Rating			
	3.4.1 Rating Summary	1	TSP	IC by DEM
	3.4.2 Strength I Flexure	3	TSP	IC by DEM
	3.4.3 Strength I Shear	20	TSP	IC by DEM
	3.4.4 Service I Flexure (Service Stresses)	3	TSP	IC by DEM
	3.4.5 Service I Principal Stresses	2	TSP	IC by DEM

URS

Job: Cline Avenue Load Rating
Item: Calculation Index
File: V:\Projects\Cline Avenue\Calc Index\[Calculation_Index.xls]Index

		Number of Pages	Designed	Checked
Volume 2	3.5 Mainline Segment 2 EB Rating			
	3.5.1 Rating Summary	1	TSP	IC by DEM
	3.5.2 Strength I Flexure	3	TSP	IC by DEM
	3.5.3 Strength I Shear	20	TSP	IC by DEM
	3.5.4 Service I Flexure (Service Stresses)	3	TSP	IC by DEM
	3.5.5 Service I Principal Stresses	2	TSP	IC by DEM
	3.6 Mainline Segment 2 WB Rating			
	3.6.1 Rating Summary	1	TSP	IC by DEM
	3.6.2 Strength I Flexure	3	TSP	IC by DEM
	3.6.3 Strength I Shear	20	TSP	IC by DEM
	3.6.4 Service I Flexure (Service Stresses)	3	TSP	IC by DEM
	3.6.5 Service I Principal Stresses	2	TSP	IC by DEM
	3.7 Mainline Segment 3 EB Rating			
	3.7.1 Rating Summary	1	TSP	IC by DEM
	3.7.2 Strength I Flexure	3	TSP	IC by DEM
	3.7.3 Strength I Shear	20	TSP	IC by DEM
	3.7.4 Service I Flexure (Service Stresses)	3	TSP	IC by DEM
	3.7.5 Service I Principal Stresses	2	TSP	IC by DEM
	3.8 Mainline Segment 3 WB Rating			
	3.8.1 Rating Summary	1	TSP	IC by DEM
	3.8.2 Strength I Flexure	3	TSP	IC by DEM
	3.8.3 Strength I Shear	20	TSP	IC by DEM
	3.8.4 Service I Flexure (Service Stresses)	3	TSP	IC by DEM
	3.8.5 Service I Principal Stresses	2	TSP	IC by DEM
	3.9 Mainline Segment 4 EB Rating			
	3.9.1 Rating Summary	1	TSP	IC by DEM
	3.9.2 Strength I Flexure	3	TSP	IC by DEM
	3.9.3 Strength I Shear	20	TSP	IC by DEM
	3.9.4 Service I Flexure (Service Stresses)	3	TSP	IC by DEM
	3.9.5 Service I Principal Stresses	2	TSP	IC by DEM
	3.10 Mainline Segment 4 WB Rating			
	3.10.1 Rating Summary	1	TSP	IC by DEM
	3.10.2 Strength I Flexure	3	TSP	IC by DEM
	3.10.3 Strength I Shear	20	TSP	IC by DEM
	3.10.4 Service I Flexure (Service Stresses)	3	TSP	IC by DEM
	3.10.5 Service I Principal Stresses	2	TSP	IC by DEM
	3.11 Mainline Segment 5 EB Rating			
	3.11.1 Rating Summary	1	TSP	IC by DEM
	3.11.2 Strength I Flexure	3	TSP	IC by DEM
	3.11.3 Strength I Shear	20	TSP	IC by DEM
	3.11.4 Service I Flexure (Service Stresses)	3	TSP	IC by DEM
	3.11.5 Service I Principal Stresses	2	TSP	IC by DEM
	3.12 Mainline Segment 5 WB Rating			
	3.12.1 Rating Summary	1	TSP	IC by DEM
	3.12.2 Strength I Flexure	3	TSP	IC by DEM
	3.12.3 Strength I Shear	20	TSP	IC by DEM
	3.12.4 Service I Flexure (Service Stresses)	3	TSP	IC by DEM
	3.12.5 Service I Principal Stresses	2	TSP	IC by DEM
	3.13 Mainline Segment 6 EB Rating			
	3.13.1 Rating Summary	1	TSP	IC by DEM
	3.13.2 Strength I Flexure	3	TSP	IC by DEM
	3.13.3 Strength I Shear	20	TSP	IC by DEM
	3.13.4 Service I Flexure (Service Stresses)	3	TSP	IC by DEM
	3.13.5 Service I Principal Stresses	2	TSP	IC by DEM
Volume 3	3.14 Mainline Segment 6 WB Rating			
	3.14.1 Rating Summary	1	TSP	IC by DEM
	3.14.2 Strength I Flexure	3	TSP	IC by DEM
	3.14.3 Strength I Shear	20	TSP	IC by DEM
	3.14.4 Service I Flexure (Service Stresses)	3	TSP	IC by DEM
	3.14.5 Service I Principal Stresses	2	TSP	IC by DEM

Job: Cline Avenue Load Rating
Item: Calculation Index
File: V:\Projects\Cline Avenue\Calc Index\[Calculation_Index.xls]Index

		Number of Pages	Designed	Checked
Volume 3	3.15 Ramp A Rating			
	3.15.1 Rating Summary	1	TSP	IC by DEM
	3.15.2 Strength I Flexure	3	TSP	IC by DEM
	3.15.3 Strength I Shear	20	TSP	IC by DEM
	3.15.4 Service I Flexure (Service Stresses)	3	TSP	IC by DEM
	3.15.5 Service I Principal Stresses	2	TSP	IC by DEM
	3.16 Ramp A Mainline Segment 2 Rating			
	3.16.1 Rating Summary	1	TSP	IC by DEM
	3.16.2 Strength I Flexure	3	TSP	IC by DEM
	3.16.3 Strength I Shear	20	TSP	IC by DEM
	3.16.4 Service I Flexure (Service Stresses)	3	TSP	IC by DEM
	3.16.5 Service I Principal Stresses	2	TSP	IC by DEM
	3.17 Ramp A Mainline Segment 3 Rating			
	3.17.1 Rating Summary	1	TSP	IC by DEM
	3.17.2 Strength I Flexure	3	TSP	IC by DEM
	3.17.3 Strength I Shear	20	TSP	IC by DEM
	3.17.4 Service I Flexure (Service Stresses)	3	TSP	IC by DEM
	3.17.5 Service I Principal Stresses	2	TSP	IC by DEM
	3.18 Ramp C Units 2-5 Rating			
	3.18.1 Rating Summary	1	TSP	IC by DEM
	3.18.2 Strength I Flexure	3	TSP	IC by DEM
	3.18.3 Strength I Shear	20	TSP	IC by DEM
	3.18.4 Service I Flexure (Service Stresses)	3	TSP	IC by DEM
	3.18.5 Service I Principal Stresses	2	TSP	IC by DEM
	3.19 Ramp C Units 1, 6-8 Rating			
	3.19.1 Rating Summary	1	TSP	IC by DEM
	3.19.2 Strength I Flexure	3	TSP	IC by DEM
	3.19.3 Strength I Shear	20	TSP	IC by DEM
	3.19.4 Service I Flexure (Service Stresses)	3	TSP	IC by DEM
	3.19.5 Service I Principal Stresses	2	TSP	IC by DEM
	3.2 Ramp C Mainline Segment 3 Rating			
	3.20.1 Rating Summary	1	TSP	IC by DEM
	3.20.2 Strength I Flexure	3	TSP	IC by DEM
	3.20.3 Strength I Shear	20	TSP	IC by DEM
	3.20.4 Service I Flexure (Service Stresses)	3	TSP	IC by DEM
	3.20.5 Service I Principal Stresses	2	TSP	IC by DEM
	3.21 Ramp C Mainline Segment 4 Rating			
	3.21.1 Rating Summary	1	TSP	IC by DEM
	3.21.2 Strength I Flexure	3	TSP	IC by DEM
	3.21.3 Strength I Shear	20	TSP	IC by DEM
	3.21.4 Service I Flexure (Service Stresses)	3	TSP	IC by DEM
	3.21.5 Service I Principal Stresses	2	TSP	IC by DEM
	3.22 Ramp B Rating			
	3.22.1 Rating Summary	1	TSP	IC by DEM
	3.22.2 Strength I Flexure	3	TSP	IC by DEM
	3.22.3 Strength I Shear	20	TSP	IC by DEM
	3.22.4 Service I Flexure (Service Stresses)	3	TSP	IC by DEM
	3.22.5 Service I Principal Stresses	2	TSP	IC by DEM
	3.23 Ramp B Mainline Segment 6 Rating			
	3.23.1 Rating Summary	1	TSP	IC by DEM
	3.23.2 Strength I Flexure	3	TSP	IC by DEM
	3.23.3 Strength I Shear	20	TSP	IC by DEM
	3.23.4 Service I Flexure (Service Stresses)	3	TSP	IC by DEM
	3.23.5 Service I Principal Stresses	2	TSP	IC by DEM
	3.24 Ramp D Rating			
	3.24.1 Rating Summary	1	TSP	IC by DEM
	3.24.2 Strength I Flexure	3	TSP	IC by DEM
	3.24.3 Strength I Shear	20	TSP	IC by DEM
	3.24.4 Service I Flexure (Service Stresses)	3	TSP	IC by DEM
	3.24.5 Service I Principal Stresses	2	TSP	IC by DEM

Job: Cline Avenue Load Rating
Item: Calculation Index
File: V:\Projects\Cline Avenue\Calc Index\[Calculation_Index.xls]Index

		Number of Pages	Designed	Checked
Volume 3	3.25 Ramp D Mainline Segment 6 Rating			
	3.25.1 Rating Summary	1	TSP	IC by DEM
	3.25.2 Strength I Flexure	3	TSP	IC by DEM
	3.25.3 Strength I Shear	20	TSP	IC by DEM
	3.25.4 Service I Flexure (Service Stresses)	3	TSP	IC by DEM
	3.25.5 Service I Principal Stresses	2	TSP	IC by DEM
Volume 4	**4 Transverse Analysis**			
	4.1 Summary	2	PT	DEM
	4.2 Live Load	14	PT	DEM
	4.3 3D Analysis Section IA	1	PT	DEM
	4.3.1 Brug Model	7	PT	DEM
	4.3.2 Brug Input AASHTO Lanes	38	PT	DEM
	4.3.3 Brug Output AASHTO Lanes (Summary)	24	PT	DEM
	4.3.4 Brug Input Striped Lanes	8	PT	IC by RJB
	4.3.5 Brug Input Striped Lanes	4	PT	IC by RJB
	4.4 3D Analysis Section IIA	1	PT	DEM
	4.4.1 Brug Model	6	PT	DEM
	4.4.2 Brug Input AASHTO Lanes	48	PT	DEM
	4.4.3 Brug Output AASHTO Lanes (Summary)	24	PT	DEM
	4.4.4 Brug Input Striped Lanes	8	PT	IC by RJB
	4.4.5 Brug Input Striped Lanes	4	PT	IC by RJB
	4.5 3D Analysis Section IIB	1	PT	DEM
	4.5.1 Brug Model	6	PT	DEM
	4.5.2 Brug Input AASHTO Lanes	48	PT	DEM
	4.5.3 Brug Output AASHTO Lanes (Summary)	24	PT	DEM
	4.5.4 Brug Input Striped Lanes	8	PT	IC by RJB
	4.5.5 Brug Input Striped Lanes	4	PT	IC by RJB
	4.6 3D Analysis Section IIIA	4	PT	DEM
	4.6.1 Brug Model	6	PT	DEM
	4.6.2 Brug Input AASHTO Lanes	48	PT	DEM
	4.6.3 Brug Output AASHTO Lanes (Summary)	24	PT	DEM
	4.6.4 Brug Input Striped Lanes	8	PT	IC by RJB
	4.6.5 Brug Input Striped Lanes	4	PT	IC by RJB
	4.7 3D Analysis Section IIIB	2	PT	DEM
	4.7.1 Brug Model	6	PT	DEM
	4.7.2 Brug Input AASHTO Lanes	48	PT	DEM
	4.7.3 Brug Output AASHTO Lanes (Summary)	24	PT	DEM
	4.7.4 Brug Input Striped Lanes	8	PT	IC by RJB
	4.7.5 Brug Input Striped Lanes	4	PT	IC by RJB
	4.8 3D Analysis Section IVA	2	PT	DEM
	4.8.1 Brug Model	6	PT	DEM
	4.8.2 Brug Input AASHTO Lanes	48	PT	DEM
	4.8.3 Brug Output AASHTO Lanes (Summary)	24	PT	DEM
	4.8.4 Brug Input Striped Lanes	8	PT	IC by RJB
	4.8.5 Brug Input Striped Lanes	4	PT	IC by RJB
	4.9 3D Analysis Section VA	1	PT	DEM
	4.9.1 Brug Model	6	PT	DEM
	4.9.2 Brug Input AASHTO Lanes	48	PT	DEM
	4.9.3 Brug Output AASHTO Lanes (Summary)	24	PT	DEM
	4.9.4 Brug Input Striped Lanes	8	PT	IC by RJB
	4.9.5 Brug Input Striped Lanes	4	PT	IC by RJB
	4.1 3D Analysis Section VB	1	PT	DEM
	4.10.1 Brug Model	6	PT	DEM
	4.10.2 Brug Input AASHTO Lanes	48	PT	DEM
	4.10.3 Brug Output AASHTO Lanes (Summary)	24	PT	DEM
	4.10.4 Brug Input Striped Lanes	8	PT	IC by RJB
	4.10.5 Brug Input Striped Lanes	4	PT	IC by RJB

Job: Cline Avenue Load Rating
Item: Calculation Index
File: V:\Projects\Cline Avenue\Calc Index\[Calculation_Index.xls]Index

		Number of Pages	Designed	Checked
	4.11 3D Analysis Section VC	1	PT	DEM
Volume5	**5 Transverse Rating**			
	5.1 Section IA			
	5.1.1 Rating Summary	4	PT	TSP
	5.1.2 General Data	1	PT	TSP
	5.1.3 Load Summary AASHTO Lanes	21	PT	TSP
	5.1.4 Operating Rating Evaluations AASHTO Lanes	48	PT	TSP
	5.1.5 Inventory Rating Evaluations AASHTO Lanes	4	PT	TSP
	5.1.6 Striped Lanes Location	1	PT	IC by RJB
	5.1.7 Rating Summary Striped Lanes	4	PT	IC by RJB
	5.1.8 Load Summary Striped Locations	3	PT	IC by RJB
	5.1.9 Operating Rating Evaluations Striped Lanes	4	PT	IC by RJB
	5.1.10 Inventory Rating Evaluations Striped Lanes	4	PT	IC by RJB
	5.2 Section IIA			
	5.2.1 Rating Summary AASHTO Lanes	4	PT	TSP
	5.2.2 General Data	1	PT	TSP
	5.2.3 Load Summary AASHTO Lanes	21	PT	TSP
	5.2.4 Operating Rating Evaluations AASHTO Lanes	48	PT	TSP
	5.2.5 Inventory Rating Evaluations AASHTO Lanes	4	PT	TSP
	5.2.6 Striped Lanes Location	1	PT	IC by RJB
	5.2.7 Rating Summary Striped Lanes	4	PT	IC by RJB
	5.2.8 Load Summary Striped Locations	3	PT	IC by RJB
	5.2.9 Operating Rating Evaluations Striped Lanes	4	PT	IC by RJB
	5.2.10 Inventory Rating Evaluations Striped Lanes	4	PT	IC by RJB
	5.3 Section IIB			
Volume 5	5.3.1 Rating Summary AASHTO Lanes	4	PT	TSP
	5.3.2 General Data	1	PT	TSP
	5.3.3 Load Summary AASHTO Lanes	21	PT	TSP
	5.3.4 Operating Rating Evaluations AASHTO Lanes	48	PT	TSP
	5.3.5 Inventory Rating Evaluations AASHTO Lanes	4	PT	TSP
	5.3.6 Striped Lanes Location	1	PT	IC by RJB
	5.3.7 Rating Summary Striped Lanes	4	PT	IC by RJB
	5.3.8 Load Summary Striped Locations	3	PT	IC by RJB
	5.3.9 Operating Rating Evaluations Striped Lanes	4	PT	IC by RJB
	5.3.10 Inventory Rating Evaluations Striped Lanes	4	PT	IC by RJB
	5.4 Section IIIA			
	5.4.1 Rating Summary AASHTO Lanes	4	PT	TSP
	5.4.2 General Data	1	PT	TSP
	5.4.3 Load Summary AASHTO Lanes	21	PT	TSP
	5.4.4 Operating Rating Evaluations AASHTO Lanes	48	PT	TSP
	5.4.5 Inventory Rating Evaluations AASHTO Lanes	4	PT	TSP
	5.4.6 Striped Lanes Location	1	PT	IC by RJB
	5.4.7 Rating Summary Striped Lanes	4	PT	IC by RJB
	5.4.8 Load Summary Striped Locations	3	PT	IC by RJB
	5.4.9 Operating Rating Evaluations Striped Lanes	4	PT	IC by RJB
	5.4.10 Inventory Rating Evaluations Striped Lanes	4	PT	IC by RJB
	5.5 Section IIIB			
	5.5.1 Rating Summary AASHTO Lanes	4	PT	TSP
	5.5.2 General Data	1	PT	TSP
	5.5.3 Load Summary AASHTO Lanes	21	PT	TSP
	5.5.4 Operating Rating Evaluations AASHTO Lanes	48	PT	TSP
	5.5.5 Inventory Rating Evaluations AASHTO Lanes	4	PT	TSP
	5.5.6 Striped Lanes Location	1	PT	IC by RJB
	5.5.7 Rating Summary Striped Lanes	4	PT	IC by RJB
	5.5.8 Load Summary Striped Locations	3	PT	IC by RJB
	5.5.9 Operating Rating Evaluations Striped Lanes	4	PT	IC by RJB
	5.5.10 Inventory Rating Evaluations Striped Lanes	4	PT	IC by RJB
	5.6 Section IVA			
	5.6.1 Rating Summary AASHTO Lanes	4	PT	TSP

Job: Cline Avenue Load Rating
Item: Calculation Index
File: V:\Projects\Cline Avenue\Calc Index\[Calculation_Index.xls]Index

		Number of Pages	Designed	Checked
Volume 6	5.6.2 General Data	1	PT	TSP
	5.6.3 Load Summary AASHTO Lanes	21	PT	TSP
	5.6.4 Operating Rating Evaluations AASHTO Lanes	48	PT	TSP
	5.6.5 Inventory Rating Evaluations AASHTO Lanes	4	PT	TSP
	5.6.6 Striped Lanes Location	1	PT	IC by RJB
	5.6.7 Rating Summary Striped Lanes	4	PT	IC by RJB
	5.6.8 Load Summary Striped Locations	3	PT	IC by RJB
	5.6.9 Operating Rating Evaluations Striped Lanes	4	PT	IC by RJB
	5.6.10 Inventory Rating Evaluations Striped Lanes	4	PT	IC by RJB
	5.7 Section VA			
	5.7.1 Rating Summary AASHTO Lanes	4	PT	TSP
	5.7.2 General Data	1	PT	TSP
	5.7.3 Load Summary AASHTO Lanes	21	PT	TSP
	5.7.4 Operating Rating Evaluations AASHTO Lanes	48	PT	TSP
	5.7.5 Inventory Rating Evaluations AASHTO Lanes	4	PT	TSP
	5.7.6 Striped Lanes Location	1	PT	IC by RJB
	5.7.7 Rating Summary Striped Lanes	4	PT	IC by RJB
	5.7.8 Load Summary Striped Locations	3	PT	IC by RJB
	5.7.9 Operating Rating Evaluations Striped Lanes	4	PT	IC by RJB
	5.7.10 Inventory Rating Evaluations Striped Lanes	4	PT	IC by RJB
	5.8 Section VB			
	5.8.1 Rating Summary AASHTO Lanes	4	PT	TSP
	5.8.2 General Data	1	PT	TSP
	5.8.3 Load Summary AASHTO Lanes	21	PT	TSP
	5.8.4 Operating Rating Evaluations AASHTO Lanes	48	PT	TSP
	5.8.5 Inventory Rating Evaluations AASHTO Lanes	4	PT	TSP
	5.8.6 Striped Lanes Location	1	PT	IC by RJB
	5.8.7 Rating Summary Striped Lanes	4	PT	IC by RJB
	5.8.8 Load Summary Striped Locations	3	PT	IC by RJB
	5.8.9 Operating Rating Evaluations Striped Lanes	4	PT	IC by RJB
	5.8.10 Inventory Rating Evaluations Striped Lanes	4	PT	IC by RJB
	5.9 Section VC			
	5.9.1 Rating Summary AASHTO Lanes	4	PT	TSP
	5.9.2 General Data	1	PT	TSP
	5.9.3 Load Summary AASHTO Lanes	21	PT	TSP
	5.9.4 Operating Rating Evaluations AASHTO Lanes	48	PT	TSP
	5.9.5 Inventory Rating Evaluations AASHTO Lanes	4	PT	TSP
	5.9.6 Striped Lanes Location	1	PT	IC by RJB
	5.9.7 Rating Summary Striped Lanes	4	PT	IC by RJB
	5.9.8 Load Summary Striped Locations	3	PT	IC by RJB
	5.9.9 Operating Rating Evaluations Striped Lanes	4	PT	IC by RJB
	5.9.10 Inventory Rating Evaluations Striped Lanes	4	PT	IC by RJB
Volume 7A	**6 Longitudinal Analysis Independent Check**	1	PT	IC
	6.1 Segment 1			
	6.1.1 Results Comparison	9	PT	IC
	6.1.2 Tango Model	1	PT	IC
	6.1.3 Tango Input	20	PT	IC
	6.2 Segment 2 EB			
	6.2.1 Results Comparison	9	PT	IC
	6.2.2 Tango Model	1	PT	IC
	6.2.3 Tango Input	15	PT	IC
	6.3 Segment 2 WB			
	6.3.1 Results Comparison	9	PT	IC
	6.3.2 Tango Model	1	PT	IC
	6.3.3 Tango Input	16	PT	IC
	6.4 Segment 3 EB			
	6.4.1 Results Comparison	6	PT	IC
	6.4.2 Tango Model	1	PT	IC

		Number of Pages	Designed	Checked
	6.4.3 Tango Input	21	PT	IC
Volume 7A	6.5 Segment 3 WB			
	6.5.1 Results Comparison	6	PT	IC
	6.5.2 Tango Model	1	PT	IC
	6.5.3 Tango Input	25	PT	IC
	6.6 Segment 4 EB			
	6.6.1 Results Comparison	9	PT	IC
	6.6.2 Tango Model	1	PT	IC
	6.6.3 Tango Input	17	PT	IC
	6.7 Segment 4 WB			
	6.7.1 Results Comparison	6	PT	IC
	6.7.2 Tango Model	1	PT	IC
	6.7.3 Tango Input	16	PT	IC
	6.8 Segment 5 EB			
	6.8.1 Results Comparison	6	PT	IC
	6.8.2 Tango Model	1	PT	IC
	6.8.3 Tango Input	19	PT	IC
	6.9 Segment 5 WB			
	6.9.1 Results Comparison	6	PT	IC
	6.9.2 Tango Model	1	PT	IC
	6.9.3 Tango Input	16	PT	IC
	6.10 Segment 6 EB			
	6.10.1 Results Comparison	6	PT	IC
	6.10.2 Tango Model	1	PT	IC
	6.10.3 Tango Input	15	PT	IC
	6.11 Segment 6 WB			
	6.11.1 Results Comparison	6	PT	IC
	6.11.2 Tango Model	1	PT	IC
	6.11.3 Tango Input	16	PT	IC
	6.12 Ramp A			
	6.12.1 Results Comparison	9	PT	IC
	6.12.2 Tango Model	6	PT	IC
	6.12.3 Tango Input	23	PT	IC
	6.13 Ramp B			
	6.13.1 Results Comparison	9	PT	IC
	6.13.2 Tango Model	1	PT	IC
	6.13.3 Tango Input	8	PT	IC
	6.14 Ramp C			
	6.14.1 Results Comparison	9	PT	IC
	6.14.2 Tango Model	1	PT	IC
	6.14.3 Tango Input	12	PT	IC
	6.15 Ramp D			
	6.15.1 Results Comparison	9	PT	IC
	6.15.2 Tango Model	1	PT	IC
	6.15.3 Tango Input	7	PT	IC
	6.16 Temperature Gradient Comparison	10	PT	IC
	6.17 Permit Truck Live Load Comparison	10	PT	IC
	7 Transverse Analysis Verification			
	7.1 Summary	1	PT	N/A
	7.2 Minimum Live Load Moment at Edge of Cantilever			
	7.2.1 Midas Results and Comparison	1	PT/DEM	N/A
	7.2.2 Brug Results	1	PT	N/A
	7.2.3 Homberg Chart Results	3	PT	N/A
	7.2.3.1 Homberg Charts – Fixed End Moment Beam	9	PT	N/A
	7.2.3.2 Homberg Charts – Continuous Beam	3	PT	N/A
	7.3 Minimum Live Load Moment at Edge of Web			
	7.3.1 Midas Results and Comparison	1	PT/DEM	N/A
	7.3.2 Brug Results	1	PT	N/A
	7.3.3. Homberg Chart Results	2	PT	N/A

Job: Cline Avenue Load Rating
Item: Calculation Index
File: V:\Projects\Cline Avenue\Calc Index\[Calculation_Index.xls]Index

		Number of Pages	Designed	Checked
	7.3.3.1 Homberg Charts – Fixed End Moment Beam	2	PT	N/A
	7.3.3.2 Homberg Charts – Continuous Beam	3	PT	N/A
Volume 7A	7.4 Minimum Live Load Moment at Top Slab - Thickness Change Location			
	7.4.1 Midas Results and Comparison	1	PT/DEM	N/A
	7.4.2 Brug Results	1	PT	N/A
	7.4.3 Homberg Chart Results	4	PT	N/A
	7.4.3.1 Homberg Charts – Fixed End Moment Beam	6	PT	N/A
	7.4.3.2 Homberg Charts – Continuous Beam	6	PT	N/A
	7.5 Maximum Live Load Moment at Top Slab - Thickness Change Location			
	7.5.1 Midas Results and Comparison	1	PT/DEM	N/A
	7.5.2 Brug Results	1	PT	N/A
	7.5.3 Homberg Chart Results	4	PT	N/A
	7.5.3.1 Homberg Charts – Fixed End Moment Beam	7	PT	N/A
	7.5.3.2 Homberg Charts – Continuous Beam	6	PT	N/A
	7.6 Minimum Live Load Moment at Top Slab - Centerline			
	7.6.1 Midas Results and Comparison	1	PT/DEM	N/A
	7.6.2 Brug Results	1	PT	N/A
	7.6.3 Homberg Chart Results	3	PT	N/A
	7.6.3.1 Homberg Charts – Fixed End Moment Beam	-	PT	N/A
	7.6.3.2 Homberg Charts – Continuous Beam	-	PT	N/A
	7.7 Maximum Live Load Moment at Top Slab - Centerline			
	7.7.1 Midas Results and Comparison	1	PT/DEM	N/A
	7.7.2 Brug Results	1	PT	N/A
	7.7.3 Homberg Chart Results	2	PT	N/A
	7.7.3.1 Homberg Charts – Fixed End Moment Beam	4	PT	N/A
	7.7.3.2 Homberg Charts – Continuous Beam	3	PT	N/A
	7.8 Minimum Live Load Moment at Top of Web			
	7.8.1 Midas Results and Comparison	1	PT/DEM	N/A
	7.8.2 Brug Results	1	PT	N/A
	7.8.3 Homberg Chart Results	2	PT	N/A
	7.8.3.1 Homberg Charts – Fixed End Moment Beam	-	PT	N/A
	7.8.3.2 Homberg Charts – Continuous Beam	-	PT	N/A
	7.9 Maximum Live Load Moment at Top of Web			
	7.9.1 Midas Results and Comparison	1	PT/DEM	N/A
	7.9.2 Brug Results	1	PT	N/A
	7.9.3 Homberg Chart Results	2	PT	N/A
	7.9.3.1 Homberg Charts – Fixed End Moment Beam	-	PT	N/A
	7.9.3.2 Homberg Charts – Continuous Beam	-	PT	N/A
	7.10 2D GTSTRUDL Analysis – Equivalent Loads on Continuous Beam	19	PT	N/A
	7.11 2D GTSTRUDL Analysis –Frame Model	20	PT	N/A
Volume 7E	**8 Review of Longitudinal Shear and Transverse Analysis**			
	8.1 Summary		RJB	N/A
	8.2 References for Interaction of Longitudinal Shear and Transverse Bending		RJB	N/A
	8.3 Initial Review of Transverse Analysis		RJB	N/A
	8.4 Revised Transverse Analysis Based on Revised Effective Span Length		RJB	N/A
	8.5 Review of Longitudinal Shear Analysis (MATHCAD Analysis)		RJB	N/A
	8.6 Comparison of the MCFT Shear Analysis - Tabularized Values (2007) Vs. Equations (2009)		RJB	N/A
Electronic Files	**8 Appendix A – GP Input Files - Geometry**		DEM	
	9 Appendix B - RM Input Files - Dead Load		DEM	
	10 Appendix C - RM Input Files - Live Load		DEM	
	10 Appendix D - Additional Longitudinal Rating Calculations		TSP	
	10 Appendix E - Brug Output Files		PT	

URS **EXHIBIT 4.7-2**

CALCULATION COVER SHEET

Client: Indiana DOT

Project Name: Cline Avenue LRFR Load Rating

Project/Calculation Number: Section 4.0

Title: TRANSVERSE ANALYSIS

Total Number of Pages (including cover sheet): 776

Total Number of Computer Runs: See Section 4.0

Prepared by: Patricia Thaesler PT Date: 1/12/2009

Checked by: Daniel Mariscal DEM Date: 1/12/2009

Description and Purpose:
Includes Brug Computer models.

Design Basis/References/Assumptions
Job Specific Criteria - See Section 1.2.

Remarks/Conclusions/Results:
None.

Calculation Approved by: _____
Project Manager/Date

Revision No.: Description of Revision: Approved by: _____
Project Manager/Date

4.0 Transverse Analysis

4.1 Summary

GEOMETRY.

There is a large variation on the bridge cross section geometry throughout the length of the bridge. Such variations have been considered in the longitudinal RM model. However, for the transverse analysis only 5 cases have been considered.

Case I

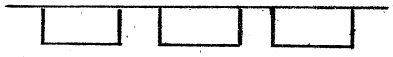

case II

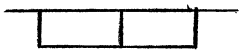

case II A - Ramp.

case II B - Mainline.

case III

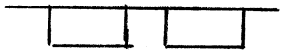

case III A constant width

Case III B maximum width

case IV

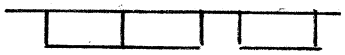

case V

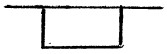

Case VA - Ramp - minimum width

Case VB - Ramp - maximum width

case VC - Single Box of Case IV

A detailed description has been included later.

URS

PROJECT: Cline Avenue CALCS BY: PT DATE:
DESCRIPTION: Transverse Section CHECKED BY: DTM DATE: 01/23/09
FILE: V:\Projects\Cline Avenue\Load Rating Analysis\Transverse Analysis\Spreadsheet\[Props&Reinf_Summary.xls]NODE

UNIT	Transverse Section ID	Rating Node	RM Segment
Segment 1 - Gdr 1	IA	1-173	1001-1172
Segment 1 - Gdr 2	IA	1-173	2001-2172
Segment 1 - Gdr 3	IA	1-173	3001-3172
Segment 2 - EBL	IIB	1-151	1174-1323
Segment 2 - WBL	IIB	1-80	2174-2252
	IIIA	80-151	2253-2323
Segment 3 - EBL	IIB	1-72	1325-1395
	IIIA	72-117	1396-1440
Segment 3 - WBL	IIIA	1-8	2325-2331
	IIIB	8-36	2332-2359
	IVA	36-76	2360-2399
	IIB	76-117	2400-2440
Segment 4 - EBL	IIIA	1-11	1442-1451
	IIIB	11-53	1452-1493
	IVA	53-87	1494-1527
	IIB	87-138	1528-1578
Segment 4 - WBL	IIB	1-138	2442-2578
Segment 5 - EBL	IIB	1-138	1580-1716
Segment 5 - WBL	IIB	1-128	2580-2706
Segment 6 - EBL	IIB	1-36	1718-1752
	IVA	36-122	1753-1838
Segment 6 - WBL	IIB	1-100	2708-2806
	IVA	100-133	2807-2839
Ramp A - Segment 2	IIIA	1-72	4001-4071
Ramp A - Segment 3	IIIA	1-8	4073-4079
	IIIB	8-36	4080-4107
	IVA (VC)	36-74	4108-4147
	VC	74-83	4148-4154
Ramp A	VA	1-57	4156-4211
	VB	57-97	4212-4251
	IIA	97-155	4252-4309
Ramp B	VA	1-48	4501-4547
Ramp B - Segment 6	IVA (VC)	1-35	4548-4581
Ramp C - Segment 3	IIIA	1-46	5001-5045
Ramp C - Segment 4	IIIA	1-11	5047-5056
	IIIB	11-53	5057-5098
	IVA (VC)	53-86	5099-5131
	VC	86-94	5132-5139
Ramp C - Units 2-5	VA	1-100	5141-5239
Ramp C - Units 1 6-8	VA	1-107	5241-5346
Ramp D	VA	1-81	5501-5580
Ramp D - Segment 6	IVA (VC)	1-100	5582-5680

4.2 Live Load

URS

4.2/1

Page ____ of ____

Job CLINE AVENUE

Project No. ____

Sheet ____ of ____

Description TRANSVERSE ANALYSIS

Computed by PT

Date 1/12/09

Checked by [illegible]

Date 1/13/09

Reference

LIVE LOAD

Figure 3.2.1 - InDOT Overload Legal Load and Permit Trucks (R1 thru R5) (Longitudinal Axle Loads and Spacing)

FYI

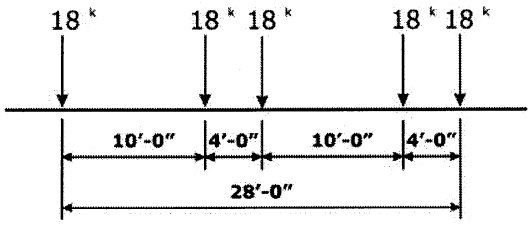

R1 - TOLL ROAD LOADING NO. 1 (W = 90 k)

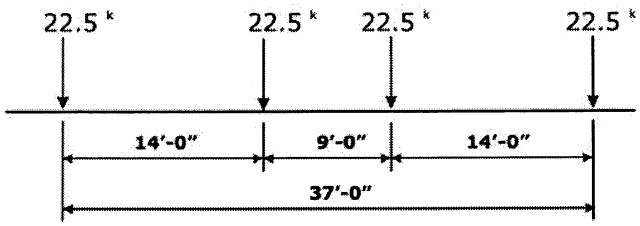

R2 - TOLL ROAD LOADING NO. 2 (W = 90 k)

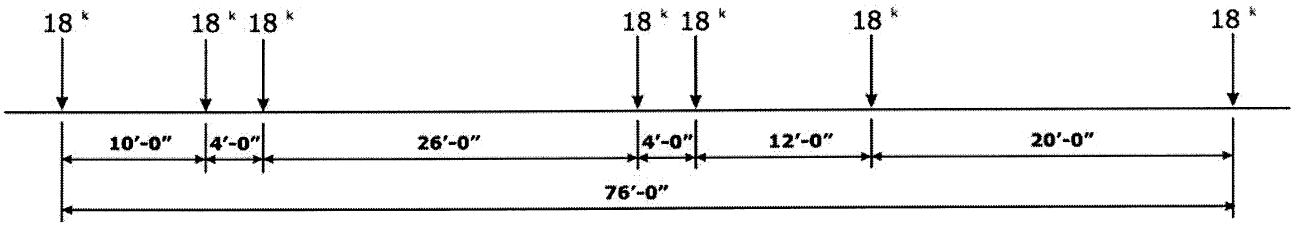

R3 - SPECIAL TOLL ROAD TRUCK (W = 126 k)

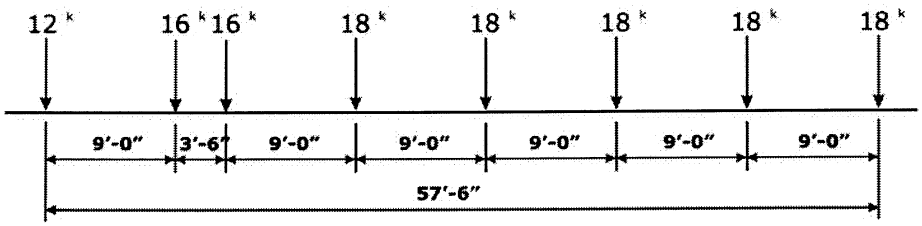

R4 - MICHIGAN TRUCK TRAIN NO. 5 (W = 134 k)

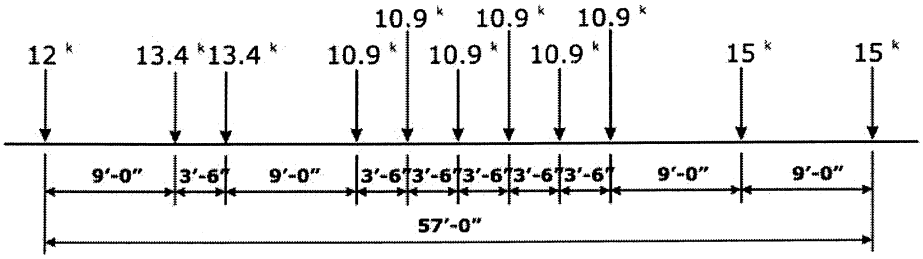

R5 - MICHIGAN TRUCK TRAIN NO. 8 (W = 134.2 k)

Figure 3.2.2 Special InDOT Permit Trucks (S1 thru S5) (Longitudinal Axle Loads and Spacing)

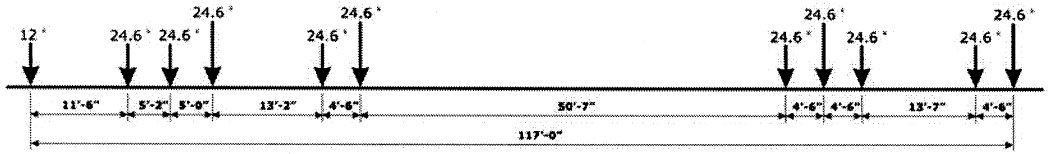

S1 - SPECIAL TRUCK 11 AXLE (W = 258 k)

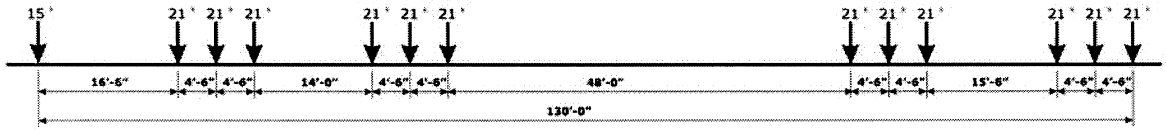

S2 - SPECIAL TRUCK 13 AXLE (W = 267 k)

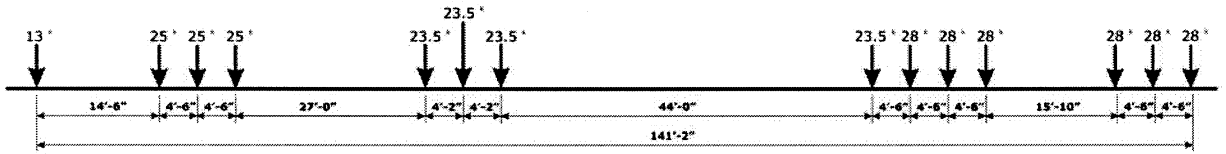

S3 - SPECIAL TRUCK 14 AXLE (W = 350 k)

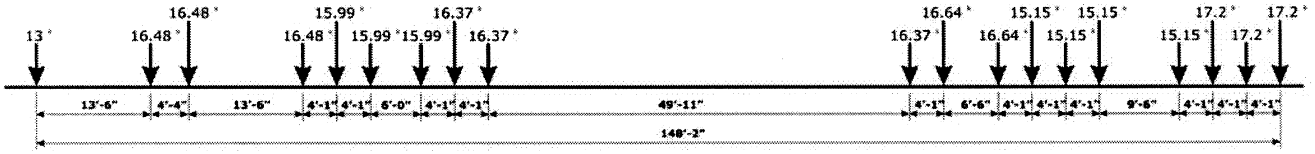

S4 - SUPERLOAD 19 AXLE (W = 305 k)

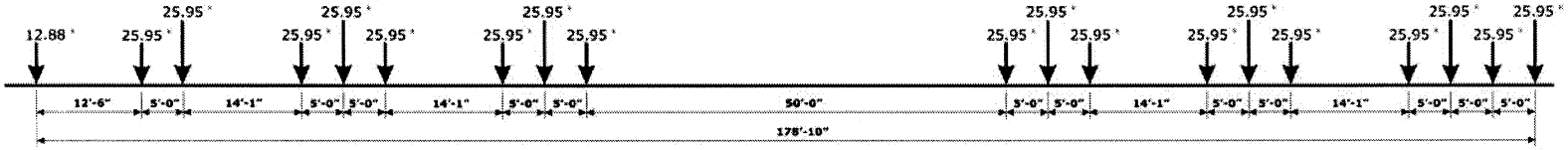

S5 - SUPERLOAD 19 AXLE (W =480 k)

4.2/3

FYI

4.2/4

F41

Table 2.2.2 - LRFR Load Factors for Segmental Bridges for Cline Avenue Project

			LRFD Dead and Permanent Loads			LRFD Transient Loads					Inventory			Operating											
											LRFD Design Loads			LRFD Design Loads	InDOT Legal Loads			InDOT Permit Loads							
			DC	DW	EL including PT Sec.	FR	TU, CR, SH	Inventory	Operating		HL-93 or Tandem	No. of Ld. Lanes = No. of Design Lanes per LRFD	No. of Ld. Lanes = No. of Design Lanes per LRFD	No. of Ld. Lanes = No. of Design Striped Lanes placed for max. effects	HL-93 or Tandem	R1	R2	R3	R4	R5	S1	S2	S3	S4	S5
								TG																	
Longitudinal	Strength I	$\gamma L =$	1.25	1.50	1.00	1.00	0.50	0.00	0.00	$\gamma L =$	1.75	X	X		1.35										
Longitudinal	Strength II	$\gamma L =$	1.25	1.50	1.00	1.00	0.50	0.00	0.00	$\gamma L =$		X	X			1.35			1.35						
Longitudinal	Service I	$\gamma L =$	1.00	1.00	1.00	1.00	1.00	0.50	0.00	$\gamma L =$	1.00	X		X	1.35	1.00			1.00						
Longitudinal	Service III	$\gamma L =$	1.00	1.00	1.00	1.00	1.00	0.50	0.00	$\gamma L =$	0.80	X		X	1.00	1.00			0.90						
Transverse	Strength I	$\gamma L =$	1.25	1.50	1.00	n/a	n/a	n/a		$\gamma L =$	1.75	X	X		1.35	1.35			1.35						

The appropriate summary rating factors shall be the lowest rating factor of load case (1)-(2) for Inventory and load case (3)-(10) for Operating per Table 2.2.3 as follows.

4 2/5
FYI

Table 2.2.3 – Load Combinations for LRFR

				Inventory		Operating							
				LRFD Design Loads		LRFD Design Loads		InDOT Legal Loads			InDOT Permit Loads		
				HL-93 or Tandem		HL-93 or Tandem		R1, R2 or R3			R4, R5, S1 thru S5		
			Load Combination (LC) No.:	**#1**	**#2**	**#3**	**#4**	**#5**	**#6**	**#7**	**#8**	**#9**	**#10**
Longitudinal	All regions, all Spans.	HL93 Truck or Tandem plus 0.64 k/lf uniform lane load in All Load Lanes (except Permit Lane for LC #9)	LRFD 3.6.1.2 LRFR 6.4.3	X		X						X	
		InDOT Legal Loads - one R1, R2 or R3 in each load lane. For comparison and posting decisions, one AASHTO HL93 Truck. Only per load lane.	InDOT – Cline Ave.					X					
		One InDOT Permit Vehicle (R4, R5, S1 thru S5) in One Load Lane (For Spans >200', apply 0.2 k/lf uniform lane load in InDOT same lane, beyond footprint of permit vehicle for max. LRFR 6.4.5.4 effects, or coincident with vehicle for convenience).	InDOT - Cline Ave. LRFR 6.4.5.4								X		
	Negative moment regions, all spans.	90% of Two HL93 Trucks in same lane spaced at 50 ft minimum plus 90% of 0.64 k/lf uniform lane load	LRFD 3.6.1.3.1		X		X						X
		Two AASHTO LRFR Type 3-3 Vehicles in same lane times 0.75 separated by 30 ft plus 100% of 0.2 k/lf uniform load.	LRFD 6.4.4.2.1						X				
	Pos. Moment and Shear For Spans <= 200 ft. For Spans > 200 ft.	~~One Type 3-3 Vehicle~~ ~~One Type 3-3 Vehicle times 0.73 plus 100% of 0.2 klf uniform load~~	LRFD 6.4.4.2.1							X			
Trans se or Local Details	All regions, all Spans.	HL93 Truck or Tandem Only (one per lane) (no uniform lane load) in All Load Lanes (except Permit Lane for LC #9)	LRFD 3.6.1.2 LRFR 6.4.3	X		X						X	
		InDOT Legal Loads - one R1, R2 or R3 in each load lane. For comparison and posting decisions, one AASHTO HL93 Truck. Only per load lane.	InDOT – Cline Ave.					X					
		One InDOT R4, R5, or S1 thru S5 Permit Vehicle in One Load Lane	InDOT LRFR 6.4.5.4								X		

Notes:

Apply Dynamic Load Allowance, IM, of 33% to Vehicle and Axle Loads only.

In negative moment regions for all span lengths and in positive moment regions in spans over 200 ft., if the value of the Rating Factor for the AASHTO Limiting Critical Load is less than 1.0, then the basic Rating Factors for all InDOT Legal Loads shall be reduced by multiplying this value.

Permit Load Rating for mixed traffic is (#8 + #9) or (#8 + #10).

Deleted: *December 10, 2007*

4.2/6
FYI

Number of Lanes

		Strength	Service
LRFD Design Loads (HL-93)			
All lanes loaded	Inventory	LRFD	LRFD
(m=1.2 one lane)	Operating	LRFD	STRIPED
INDOT Design Loads (R1-R3)			
All lanes loaded	Operating	LRFD	STRIPED
(m=1.2 one lane)			
INDOT Design Loads (R4-R5)			
One lane loaded + HL-93	Operating	LRFD	STRIPED
(m=1.0 one lane)			
INDOT Permit Loads (S1-S5)			
One lane loaded + HL-93	Operating	STRIPED	STRIPED
(m=1.0 one lane)			

NOTES:

1. In all cases INDOT Design Loads R1-R5 and Permit Loads S1-S5 include a 0.64klf uniform lane load simultaneously and not interrupted by the space occupied by the trucks. Neglect the uniform lane load for transverse load.
2. All axle loads are increased by 33% to account for a Dynamic Impact Factor.
3. Number of Striped lanes is limited to a maximum of 3 lanes at ALL locations.
4. For transverse load rating, the number of lanes is limited to 2.

Job CLINE AVENUE LOAD RATING Project No. ____
Description TRANSVERSE ANALYSIS Computed by PT Date 1/12/09
Checked by [illegible] Date 1/13/09
Reference

Live load case HL93 + Permit.

The following was considered ONLY for the live load case when a design/permit load and an HL93 loading were combined, Michigan truck Train No. 5 and No 8 which are labeled as trucks R4 and R5, and the special INDOT permit trucks (S1 thru S5).

1.- Consider the following Brug runs.

Case ① two HL93 Trucks.

Case ② One HL93 Truck.

Case ③ Two HL93 Tandem.

Case ④ One HL93 Tandem.

Case ⑤ Two Permit truck } R_4, R_5

Case ⑥ One Permit truck } S_1, S_2, S_3, S_4 and S_5

2.- Check if one permit truck control over two permit truck

If $abs(M_{Two\ truck}) > abs(M_{one\ truck})$, then two truck control

3.- If one truck control

$M_{Design} = M_{one\ truck}$.

4 – If two truck controls.

M_{Design} = Maximum of the following:

case ② + (case ⑤ – case ⑥)

case ⑥ + (case ① – case ②)

case ④ + (case ⑤ – case ⑥)

case ⑥ + (case ③ – case ④)

Job CLINE AVENUE LOAD RATING Project No. ____
Description TRANSVERSE ANALYSIS Computed by PT Date 1/12/09
Checked by [illegible] Date 1/13/09
Reference

TRUCK CLASSIFICATION

Based on the Michigan Department of transportation, bridge analysis guide, page 3-3, vehicles exceeding 108,000 lb in weight were considered permit truck

The special toll road Truck (W= 126K) is above the limits set above but was still considered a permit truck due to the frequence of its ocurrence.

Multiple Presence Factor (mpf).

Brug does not apply the mpf properly. According to LRFD and Indiana DOT Design guidelines, Item 60-3.02(02), mpf for toll Road Live load should be the same as those used for regular design trucks, (1.2 for one truck)

For permit truck including Michigan truck train Live load (R_4, R_5) and Indiana DOT Permit Loads (S_1 thru $S5$) mpf was chosen as 1.0 for one truck based on AASHTO LRFR 6.3.2

To calculate the controlling moment with the correct mpf factor, it was required to run brug models with one truck and two trucks and the mpf = 1.0, the correct mpf was applied outside brug after the controlling Live load Moment was determined.

4.2/11
FYI

Vehicular live load is most often the most important load. Vehicular live loading (HL-93) should consist of the design truck or design tandem and the design lane load.

The design truck or the design tandem or parts of the truck are to be placed on the bridge in governing position to produce the maximum force effect, and the largest is selected. Axle loads and uniformly distributed loads that do not contribute to the extreme force effect under consideration should be neglected.

The 33% dynamic load allowance is applicable only to the design truck and the design tandem and their constituent axle and wheel loads, but not to the design lane load.

The 1.0 multiple presence factor for two loaded lanes is the result of the *LRFD Specifications*' calibration process relative to two side-by-side vehicles. The 1.2 factor should be used where a single tandem or single vehicle or its constituent axle or wheel loads govern, such as in overhangs, decks, fatigue, etc.

The *LRFD Specifications* retains the traditional design lane width of 12 ft and the spacing of axles and wheels of the design truck. Both the design truck and the design lane load occupy a 10-ft width within the design lane. The design lane load now represents a statistically acceptable mixture of vehicles both preceding and following the design truck. The design lane load is no longer an alternative to the truck, but one applied simultaneously with either the design truck or tandem. The *Specifications* requires that the design lane load should not be interrupted by the space occupied by the truck or tandem.

Article 3.6.1.3.1 requires that two design trucks, combined with the lane load, be applied within the spacing limitations specified, on adjacent spans of a continuous structure for negative moments and reactions at interior supports. The reduced probability of such an occurrence is accommodated by multiplying the resulting force effects by 0.9.

Section 60-5.0 discusses the application of vehicular live load.

60-3.02(02) Toll Road and Michigan Design Trucks

Each bridge should be designed for the HL-93 vehicular live load described above. In addition, a series of design truck loads should be used as described as follows:

1. Toll Road Live Load. In addition to the *Specifications'* live load regime, the Toll Road live load should apply to each State highway bridge located within 15 mi of an Indiana Toll Road gate. A single truck with design lane load should be used in each design lane. This loading should be investigated under Strength I Limit State. The configurations of

FYI 4.2/12

the three Toll Road live load vehicles are shown in Figures 60-3A, 60-3B, and 60-3C. Factors for multiple presence and dynamic load allowance should be the same as those used for regular design trucks.

2. Michigan Truck Train Live Load. In addition to the *Specifications'* live load regime, the Michigan Truck Train live load should apply to each bridge located on the Indiana Extra Heavy Duty Highway System. The locations of these highways are shown in Figure 60-3D. The configurations of the two Michigan Truck Train vehicles are shown in Figures 60-3E and 60-3F. A single truck with design lane load should be limited to one design lane located to cause extreme force effects, while the other design lanes are occupied by regular design loads. This loading combination should be investigated under the Strength I Limit State. Factors for multiple presence and dynamic load allowance should be the same as those used for regular design trucks.

↳ per LRFR 6.3.2 mpf of 1.2 shall not be used for permit vehicles.

These design trucks should not be employed for fatigue considerations, but may be used for centrifugal and braking forces.

60-3.02(03) Fatigue Load

1. Fatigue Load. The fatigue load consists of a single design truck per bridge with a load factor of 0.75. This considerable reduction in comparison with traditional values is compensated by considering low-level stress ranges with a frequency that exceeds the traditional two million cycles. The dynamic load allowance of 15% should be applied to the fatigue load.

2. *LRFD Specifications* References. In summary, the *Specifications* discusses fatigue load in the Articles as follows:
   a. Article 3.6.1.4;
   b. Article 5.5.3;
   c. Article 6.5.3;
   d. Article 6.6.1;
   e. Article 6.10.6; and
   f. Article 6.13.2.10.3.

3. Frequency. The frequency provisions of the *LRFD Specifications* always apply. See Section 64-4.01(02) for stress cycles.

60-3.03 Centrifugal and Braking Forces, and Wind Pressure on Vehicle

4.2/13

FYI

The general maximum height and width limitations are 13 ft 6 in and 8 ft 6 in, respectively, although IDOT has a set of legal dimensions for various configurations of trucks.

Indiana

The Indiana Department of Transportation (INDOT) uses the AASHTO H20-44 and HS20-44 vehicles to establish load ratings for their bridges. All INDOT load ratings are calculated using the Load Factor Method of analysis. INDOT's Superload Permit Section uses AASHTO Bridge Analysis and Rating System (BARS) software to calculate its load ratings.

The maximum legal weight of any vehicle in Indiana is 80,000 lb. Individual axle weights are limited to those specified by FHWA Bridge Formula B.

The maximum height and width are 13 ft 6 in and 8 ft 6 in, respectively. The limitations for length are 40 ft for a single vehicle and 60 ft for a combination vehicle (the semitrailer length is limited to 53 ft). Any vehicles exceeding these restrictions must obtain a permit prior to moving on Indiana highways.

If the vehicle exceeds any of the following limits, a "superload" permit is required: 16 ft in width, 15 ft in height, 110 ft in length and 108,000 lb in weight.

Special Toll Road Truck (W = 126 K) is above limit but it was considered legal due to its frequent occurrence.

Ohio

The Ohio Department of Transportation (ODOT) has a standard set of design vehicles called "Ohio Legal Loads" that are used to rate all bridges in its inventory. These vehicles include the AASHTO HS20-44 design vehicle, and special vehicles with designations 2F1, 3F1, 4F1 and 5C1. The vehicle configurations are shown in Figure 3.1.

ODOT uses the Load Factor Method to calculate load ratings. ODOT's preferred software to perform bridge load rating analyses is AASHTO BARS. ODOT has made a personal computer version of this software available free of cost on its website. ODOT also accepts software such as BRASS, Merlin-Dash, STAAD, GT STRUDL, SAP 90 and SAP 2000.

Legal weight limits in Ohio are 80,000 lb for the gross vehicle weight, and individual axle weights are restricted based on the FHWA Federal Bridge Formula B. Vehicles exceeding 80,000 lb must apply for a "Routine Issue Permit" before traveling on Ohio

URS

4.2/14

Page ____ of ____

Job CLINE AVENUE LOAD RATING | Project No. ____ | Sheet ____ of ____

Description TRANSVERSE ANALYSIS | Computed by PT | Date 1/12/09

Checked by [illegible] | Date 1/13/09

Reference

APPLICATION OF VEHICULAR LIVE LOAD, AASHTO LRFR 6.2.3.2

- The center of any wheel load shall not be closer than 2.0 ft from the edge of a traffic lane or face of the curb.
- The distance between adjacent wheel lines of passing truck shall not be less than 4.0 ft
- The standard gage width, distance between the wheels of a truck shall be taken to be 6 ft unless noted otherwise.
- Each axle is composed of four wheels, as shown below

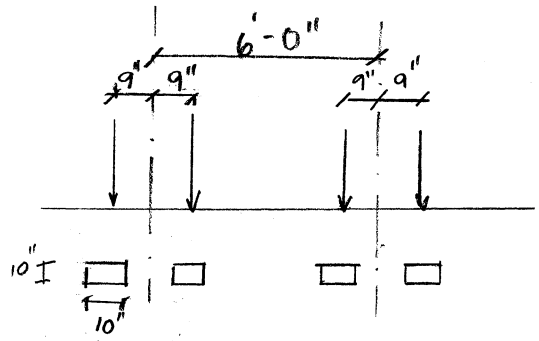

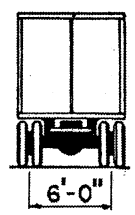

4.3 3D Analysis Section IA

case I Three boxes (6 webs)

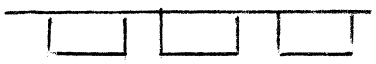

worst case between piers 5 & 6; segment 1, because it has the longest span.

This section only occurs on segment 1, and has a constant width.

4.3.1 Brug Model

BRUG SECTIONS

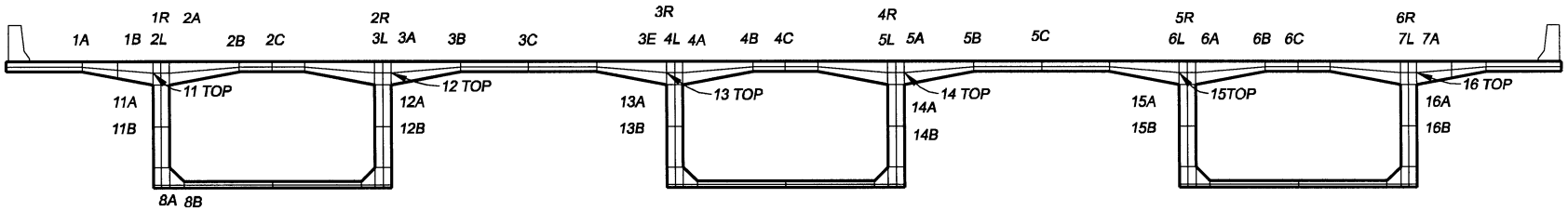

Due to Brug output node limitations (Code 1209) only bottom slab sections 8A and 8B and web sections A and B were listed on the output.

JDEM
1/13/09

4.3.1/1

HALF SIZE PRINT - 11x17	Designed by		URS Corporation Southern 7650 Corporate Center Drive Suite 400 Miami, Fl. 33126-1220 Tel. (305) 262-7446 C.A. No. EB 00000002	TYPICAL SECTION - Transverse Analysis		SECTION IA
No. Date Rev. Revisions	Drawn by R.V.A.					
	Checked by					
	DRAWING SCALE					

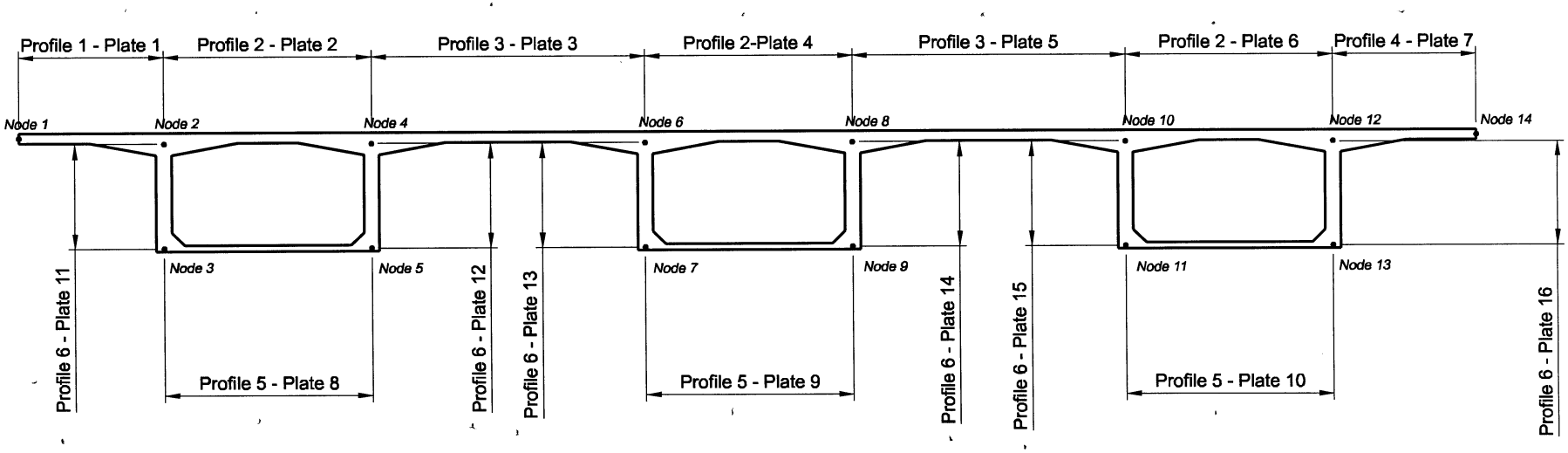

JRSEM
1/14/09

4.3.1/2

HALF SIZE PRINT - 11x17

Designed by
Drawn by
Checked by
DRAWING SCALE:

No. Date App. Revisions

URS

URS Corporation Southern
7650 Corporate Center Drive
Suite 400
Miami, FL 33126-1220
Tel: (305) 262-7466
C.A. No. 8/8 00000002

NAME P.C. NO.

DRAWING NO.

SHEET NO.

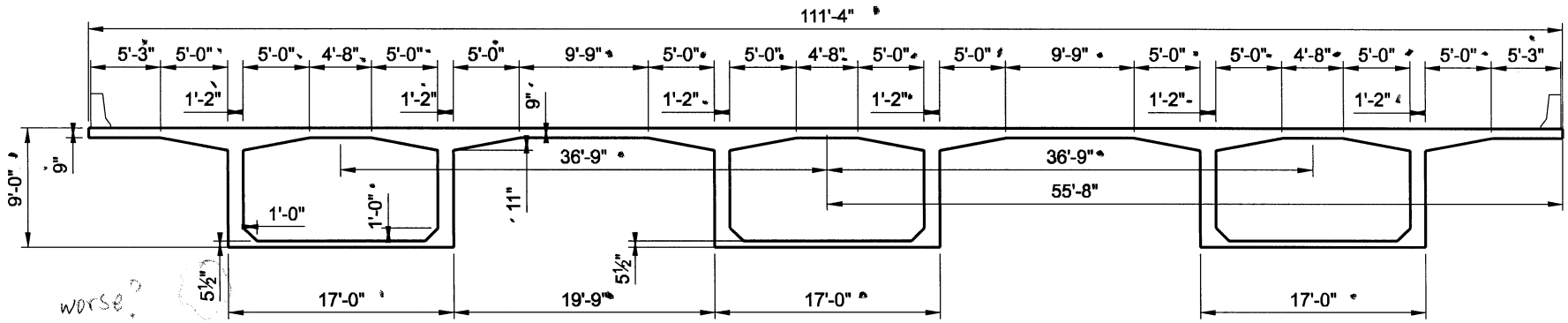

DIMENSIONS

1/13/09

4.3.1/3

HALF SIZE PRINT - 11x17	Designed by		URS Corporation Southern 7650 Corporate Center Drive Suite 400 Miami, FL 33126-1220 Tel. (305) 262-7468 C.A. No. EB 00000022	TYPICAL SECTION - Transverse Analysis		SECTION IA
No. Date App. Revisions	Drawn by R.V.A.					DRAWING NO. SHEET NO.
	Checked by					
	DRAWING ISSUE:					

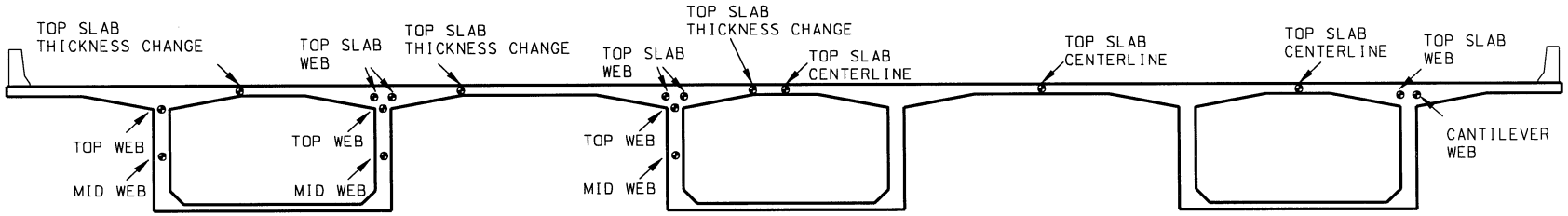

RATING POINTS

RDLM
1/13/09

4.3.1/4

HALF SIZE PRINT - 11x17				
No.	Date	App.	Revisions	

Designed by
Drawn by R.V.A.
Checked by
DRAWING SCALE:

URS Corporation Southern
7650 Corporate Center Drive
Suite 400
Miami, FL 33126-1220
Tel: (305) 260-7456
C.A. No. EB 00000002

TYPICAL SECTION - Transverse Analysis

NAME P.C. NO.

SECTION IA

DRAWING NO. SHEET NO.

URS CORPORATION	Made by:	PT	Date: 14-Jan-09	Job Number: 25626272.00001	Job Number: 25626272.00001
	Checked by:	[illegible]	Date: 1/14/09	Sheet Number:	Sheet Number:
Brug Joints and Members	Backchecked by:		Date:		

V:\Projects\Cline Avenue\Load Rating Analysis\Transverse Analysis\Spreadsheet\[Brug Input.xls]Model_Joints Brugh_I

Data measured from Microstation File

V:\Projects\Cline Avenue\Load Rating Analysis\Transverse Analysis\Spreadsheet\[Brug Input.xls]Model_Joints Brugh_I

GTStrudl Joint	X ft	Y ft	Height ft	BRUG NODE
1	0.0000	8.1667	0.750	1
2	5.4167	8.1667	0.750	
3	7.9167	8.1667	1.208	
4	10.4167	8.1667	1.667	
5	11.0000	8.1667	1.667	2
6	11.5833	8.1667	1.667	
7	16.5833	8.1667	0.750	
8	18.9167	8.1667	0.750	
9	21.2500	8.1667	0.750	
10	26.2500	8.1667	1.667	
11	26.8333	8.1667	1.667	4
12	27.4167	8.1667	1.667	
13	32.4167	8.1667	0.750	
14	37.2917	8.1667	0.750	
15	42.1667	8.1667	0.750	
16	47.1667	8.1667	1.667	
17	47.7500	8.1667	1.667	6
18	48.3333	8.1667	1.667	
19	53.3333	8.1667	0.750	
20	55.6667	8.1667	0.750	
21	58.0000	8.1667	0.750	
22	63.0000	8.1667	1.667	
23	63.5833	8.1667	1.667	8
24	64.1667	8.1667	1.667	
25	69.1667	8.1667	0.750	
26	74.0417	8.1667	0.750	
27	78.9167	8.1667	0.750	
28	83.9167	8.1667	1.667	
29	84.5000	8.1667	1.667	10
30	85.0833	8.1667	1.667	
31	90.0833	8.1667	0.750	
32	92.4167	8.1667	0.750	
33	94.7500	8.1667	0.750	
34	99.7500	8.1667	1.667	
35	100.3333	8.1667	1.667	12
36	100.9167	8.1667	1.667	
37	103.4167	8.1667	1.208	
38	105.9167	8.1667	0.750	
39	111.3333	8.1667	0.750	14
40	11.0000	7.3333	1.167	
41	11.0000	4.3958	1.167	
42	11.0000	1.4583	1.167	
43	11.0000	0.2292	1.167	3
44	11.5833	0.2292	1.458	
45	12.5833	0.2292	0.458	
46	18.9167	0.2292	0.458	
47	25.2500	0.2292	0.458	

GTStrudl MEMBER	BEGIN JOINT	END JOINT	Length ft
1	1	2	5.417
2	2	3	2.500
3	3	4	2.500
4	4	5	0.583
5	5	6	0.583
6	6	7	5.000
7	7	8	2.333
8	8	9	2.333
9	9	10	5.000
10	10	11	0.583
11	11	12	0.583
12	12	13	5.000
13	13	14	4.875
14	14	15	4.875
15	15	16	5.000
16	16	17	0.583
17	17	18	0.583
18	18	19	5.000
19	19	20	2.333
20	20	21	2.333
21	21	22	5.000
22	22	23	0.583
23	23	24	0.583
24	24	25	5.000
25	25	26	4.875
26	26	27	4.875
27	27	28	5.000
28	28	29	0.583
29	29	30	0.583
30	30	31	5.000
31	31	32	2.333
32	32	33	2.333
33	33	34	5.000
34	34	35	0.583
35	35	36	0.583
36	36	37	2.500
37	37	38	2.500
38	38	39	5.417
39	5	40	0.833
40	40	41	2.937
41	41	42	2.938
42	42	43	1.229
43	43	44	0.583
44	44	45	1.000
45	45	46	6.333
46	46	47	6.333
47	47	48	1.000

LEFT CANTILEVER (Profile 1)

GT Joint	Brug Section	Brug Joint	Length	Height
1	1L	1	0.000	0.750
2	1A	2	5.417	0.750
3		3	7.917	1.208
4	1B	4	10.417	1.667
5	1R	5	11.000	1.667

LEFT CELL (Profile 2)

GT Joint	Brug Section	Brug Joint	Length	Height
5	2L	1	0.000	1.667
6	2A	2	0.583	1.667
7	2B	3	5.583	0.750
8	2C	4	7.917	0.750
9		5	10.250	0.750
10		6	15.250	1.667
11	2R	7	15.833	1.667

SPAN BETWEEN CELLS (Profile 3)

GT Joint	Brug Section	Brug Joint	Length	Height
11	3L	1	0.000	1.667
12	3A	2	0.583	1.667
13	3B	3	5.583	0.750
14	3C	4	10.458	0.750
15		5	15.333	0.750
16		6	20.333	1.667
17	3R	7	20.917	1.667

RIGHT CANTILEVER (Profile 4)

GT Joint	Brug Section	Brug Joint	Length	Height
35	7L	1	0.000	1.667
36	7A	2	0.583	1.667
37		3	3.083	1.208
38		4	5.583	0.750
39	7R	5	11.000	0.750

BOTTOM SLAB (Profile 5)

GT Joint	Brug Section	Brug Joint	Length	Height
43	8L	1	0.000	1.458
44	8A	2	0.583	1.458
45	8B	3	1.583	0.458
46		4	7.917	0.458
47		5	14.250	0.458
48		6	15.250	1.458
49	5R	7	15.833	1.458

WEB (Profile 6)

GT Joint	Brug Section	Brug Joint	Length	Height
5	11 TOP	1	0.000	1.167
40	11A	2	0.833	1.167
41	11B	3	3.771	1.167
42		4	6.708	1.167
43	11 BOTTOM	5	7.937	1.167

4.3.1/5

URS CORPORATION	Made by:	PT	Date: 14-Jan-09	Job Number: 25626272.00001	Job Number: 25626272.00001
	Checked by:	DGM	Date: 1/14/09	Sheet Number:	Sheet Number:
Brug Joints and Members	Backchecked by:		Date:		

V:\Projects\Cline Avenue\Load Rating Analysis\Transverse Analysis\Spreadsheet\[Brug Input.xls]Model_Joints Brugh_I

Data measured from Microstation File

V:\Projects\Cline Avenue\Load Rating Analysis\Transverse Analysis\Spreadsheet\[Brug Input.xls]Model_Joints Brugh_I

GTStrudl Joint	X ft	Y ft	Height ft	BRUG NODE
48	26.2500	0.2292	1.458	
49	26.8333	0.2292	1.167	5
50	26.8333	1.4583	1.167	
51	26.8333	4.3958	1.167	
52	26.8333	7.3333	1.167	
54	47.7500	7.3333	1.167	
55	47.7500	4.3958	1.167	
56	47.7500	1.4583	1.167	
57	47.7500	0.2292	1.167	7
58	48.3333	0.2292	1.458	
59	49.3333	0.2292	0.458	
60	55.6667	0.2292	0.458	
61	62.0000	0.2292	0.458	
62	63.0000	0.2292	1.458	
63	63.5833	0.2292	1.167	9
64	63.5833	1.4583	1.167	
65	63.5833	4.3958	1.167	
66	63.5833	7.3333	1.167	
68	84.5000	7.3333	1.167	
69	84.5000	4.3958	1.167	
70	84.5000	1.4583	1.167	
71	84.5000	0.2292	1.167	11
72	85.0833	0.2292	1.458	
73	86.0833	0.2292	0.458	
74	92.4167	0.2292	0.458	
75	98.7500	0.2292	0.458	
76	99.7500	0.2292	1.458	
77	100.3333	0.2292	1.167	13
78	100.3333	1.4583	1.167	
79	100.3333	4.3958	1.167	
80	100.3333	7.3333	1.167	

GTStrudl MEMBER	BEGIN JOINT	END JOINT	Length ft
48	48	49	0.583
49	49	50	1.229
50	50	51	2.938
51	51	52	2.937
52	52	11	0.833
53	17	54	0.833
54	54	55	2.937
55	55	56	2.938
56	56	57	1.229
57	57	58	0.583
58	58	59	1.000
59	59	60	6.333
60	60	61	6.333
61	61	62	1.000
62	62	63	0.583
63	63	64	1.229
64	64	65	2.938
65	65	66	2.937
66	66	23	0.833
67	29	68	0.833
68	68	69	2.937
69	69	70	2.938
70	70	71	1.229
71	71	72	0.583
72	72	73	1.000
73	73	74	6.333
74	74	75	6.333
75	75	76	1.000
76	76	77	0.583
77	77	78	1.229
78	78	79	2.938
79	79	80	2.937
80	80	35	0.833

4.3.1/6

TRUCK LOCATION - NO TRAFFIC ON SHOULDERS

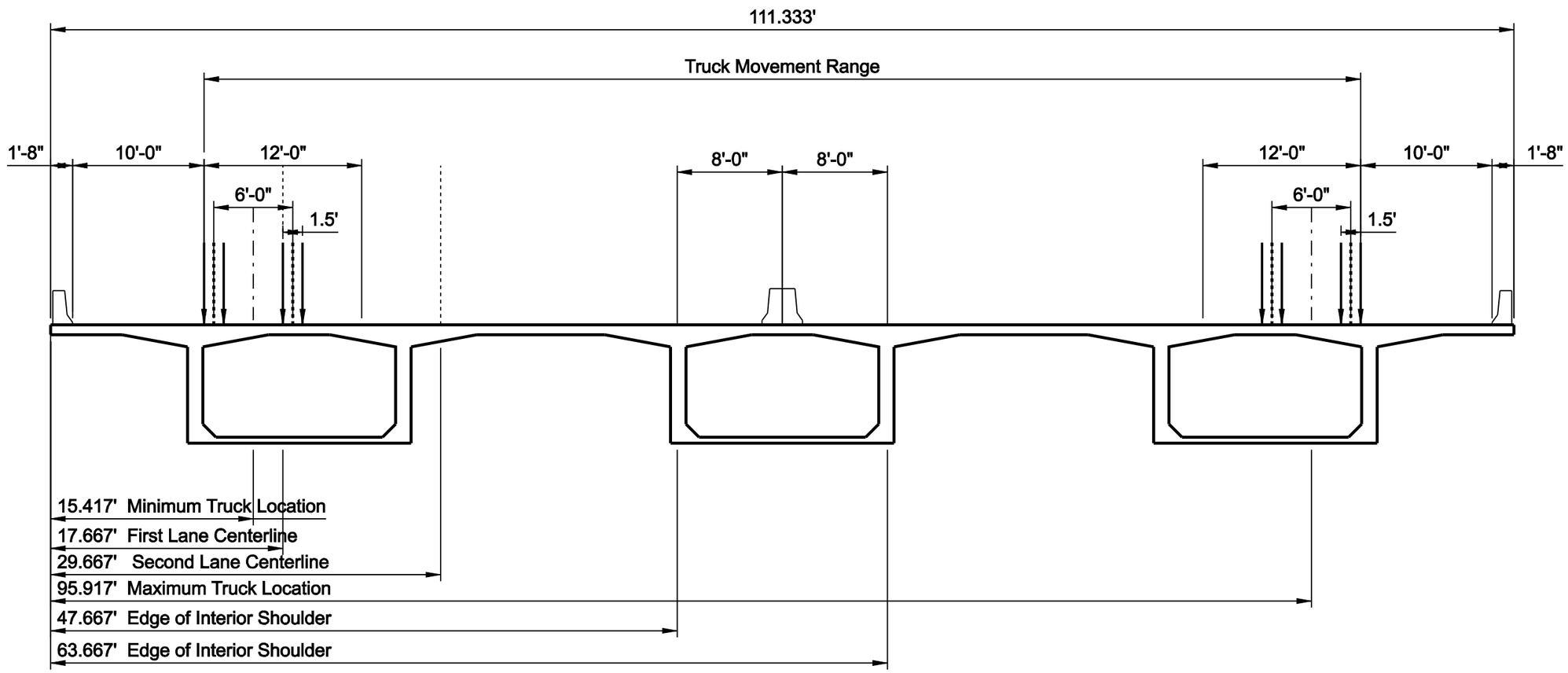

HALF SIZE PRINT - 11x17

No.	Date	App.	Revisions

Designed by -
Drawn by R.V.A.
Checked by -
DRAWING SCALE:

URS Corporation Southern
7650 Corporate Center Drive
Suite 400
Miami, FL 33126-1220
Tel: (305) 262-7466
C.A. No. EB 00000002

TYPICAL SECTION - Transverse Analysis

NAME FIL. NO.

SECTION IA

DRAWING NO. -
SHEET NO. -

Design by: PT 9/09
Independent Check by: RJB 9/09

4.3.2 Brug Input AASHTO Lanes

1I_A_WB_HL93_truck_EL.txt 9/9/2009

```
* start ; column 11-30 can be used to have your own text on the top of each page
*   5   10   15   20   25   30   35   40   45   50   55   60   65   70   75   80
*   V    V    V    V    V    V    V    V    V    V    V    V    V    V    V    V
00001  1 1     VEH: HL93- TRUCK - SINGLE TRUCK
* code 1001
Cline Avenue - Load Rating - Triple Box - 6 Webs - 111'-4" Wide
* code 1002
    2         1
* code 1003
*   5   10   15   20   25   30   35   40   45   50   55   60   65   70   75   80
*   V    V    V    V    V    V    V    V    V    V    V    V    V    V    V    V
250.0     168.0     111.33    1.0       1.0       1.3
* code 1004
    1    0    3
* code 1005
   72    1
* code 1005a
* location traffic lanes
7.667
* maximum and minimum truck
6.667     104.667   10.000
* code 1007, linear loads
0.7350    0.441
55.665    0.992
110.5983  0.441
* code 1201
   14    6    7    3    6
* code 1202 coordinates
0.0000    0.0
11.0000   0.0
11.0000   -7.938
26.8333   0.0
26.8333   -7.938
47.7500   0.0
47.7500   -7.938
63.5833   0.0
63.5833   -7.938
84.5000   0.0
84.5000   -7.938
100.3333  0.0
100.3333  -7.938
111.33    0.0
* code 1203 - profile 1
    5    2    4
0.0000    0.750
5.417     0.750
7.917     1.208
10.417    1.667
11.000    1.667
* code 1203 - profile 2
    7    2    3    4
0.000     1.667
0.583     1.667
5.583     0.750
7.917     0.750
10.2500   0.750
15.250    1.667
15.833    1.667
* code 1203 - profile 3
    7    2    3    4
0.000     1.667
0.583     1.667
5.583     0.750
10.458    0.750
15.333    0.750
20.333    1.667
20.917    1.667
* code 1203 - profile 4
    5    2    3    4
0.000     1.667
0.583     1.667
3.083     1.208
5.583     0.750
11.000    0.750
* code 1203 - profile 5
    7    2    3    4
0.000     1.458
0.583     1.458
1.583     0.458
7.917     0.458
14.2500   0.458
```

1I_A_WB_HL93_truck_EL.txt 9/9/2009

```
15.250    1.458
15.833    1.458
* code 1203 - profile 6
    5    2    3
0.000     1.167
0.833     1.167
3.771     1.167
6.708     1.167
7.938     1.167
* code 1204 - assembling boxgirder
    1    2    1
    2    4    2
    4    6    3
    6    8    2
    8   10    3
   10   12    2
   12   14    4
    3    5    5
    7    9    5
   11   13    5
    2    3    6
    4    5    6
    6    7    6
    8    9    6
   10   11    6
   12   13    6
* code 1205 control code
    1    2   13    1    1    0    4    3     1.0       1.0
* code 1206 wheels/axle
       0.0
       1.5
       6.0
       7.5 0.833
* code 1207 definition axles
0.0       0.1
14.0      0.4
28.0      0.4
* code 1208 - accuracy
0.00001   0.00001   0.00001   .00001    .00001
* code 1209 number sections
   50
   1A   1B   1R   2L   2A   2B   2C   2R   3L   3A   3B   3C   3R   4L
   4A   4B   4C   4R   5L   5A   5B   5C   5R   6L   6A   6B   6C   6R
   7L   7A   8A   8B  11L  11A  11B  12L  12A  12B  13L  13A  13B  14L
  14A  14B  15L  15A  15B  16L  16A  16B
* code 1210 - density conrete
0.156
* code 1211 - extra forces selfweight

* code 1212 - surcharge
2.7833
* code 1213 - Prestressing Layout - NONE
```

```
* start ; column 11-30 can be used to have your own text on the top of each page
*   5   10   15   20   25   30   35   40   45   50   55   60   65   70   75   80
*   V    V    V    V    V    V    V    V    V    V    V    V    V    V    V    V
00001  1 1     VEH: HL93- TANDEM - SINGLE TRUCK
* code 1001
Cline Avenue - Load Rating - Triple Box - 6 Webs - 111'-4" Wide
* code 1002
    2         1
* code 1003
*   5   10   15   20   25   30   35   40   45   50   55   60   65   70   75   80
*   V    V    V    V    V    V    V    V    V    V    V    V    V    V    V    V
250.0     168.0     111.33    1.0       1.0       1.3
* code 1004
    1    0    3
* code 1005
   50    1
* code 1005a
* location traffic lanes
7.667
* maximum and minimum truck
6.667     104.667   10.000
* code 1007, linear loads
0.7350    0.441
55.665    0.992
110.5983  0.441
* code 1201
   14    6    7    3    6
* code 1202 coordinates
0.0000    0.0
11.0000   0.0
11.0000   -7.938
26.8333   0.0
26.8333   -7.938
47.7500   0.0
47.7500   -7.938
63.5833   0.0
63.5833   -7.938
84.5000   0.0
84.5000   -7.938
100.3333  0.0
100.3333  -7.938
111.33    0.0
* code 1203 - profile 1
    5    2    4
0.0000    0.750
5.417     0.750
7.917     1.208
10.417    1.667
11.000    1.667
* code 1203 - profile 2
    7    2    3    4
0.000     1.667
0.583     1.667
5.583     0.750
7.917     0.750
10.2500   0.750
15.250    1.667
15.833    1.667
* code 1203 - profile 3
    7    2    3    4
0.000     1.667
0.583     1.667
5.583     0.750
10.458    0.750
15.333    0.750
20.333    1.667
20.917    1.667
* code 1203 - profile 4
    5    2    3    4
0.000     1.667
0.583     1.667
3.083     1.208
5.583     0.750
11.000    0.750
* code 1203 - profile 5
    7    2    3    4
0.000     1.458
0.583     1.458
1.583     0.458
7.917     0.458
14.2500   0.458
```

```
15.250    1.458
15.833    1.458
* code 1203 - profile 6
    5    2    3
0.000     1.167
0.833     1.167
3.771     1.167
6.708     1.167
7.938     1.167
* code 1204 - assembling boxgirder
    1    2    1
    2    4    2
    4    6    3
    6    8    2
    8   10    3
   10   12    2
   12   14    4
    3    5    5
    7    9    5
   11   13    5
    2    3    6
    4    5    6
    6    7    6
    8    9    6
   10   11    6
   12   13    6
* code 1205 control code
    1    2   13    1    1    0    4    2     1.0       1.0
* code 1206 wheels/axle
       0.0
       1.5
       6.0
       7.5 0.833
* code 1207 definition axles
0.0       0.5
4.0       0.5
* code 1208 - accuracy
0.00001   0.00001   0.00001   .00001    .00001
* code 1209 number sections
   50
   1A   1B   1R   2L   2A   2B   2C   2R   3L   3A   3B   3C   3R   4L
   4A   4B   4C   4R   5L   5A   5B   5C   5R   6L   6A   6B   6C   6R
   7L   7A   8A   8B  11L  11A  11B  12L  12A  12B  13L  13A  13B  14L
  14A  14B  15L  15A  15B  16L  16A  16B
* code 1210 - density conrete
0.156
* code 1211 - extra forces selfweight

* code 1212 - surcharge
2.7833
* code 1213 - Prestressing Layout - NONE
```

```
* start ; column 11-30 can be used to have your own text on the top of each page
*   5   10   15   20   25   30   35   40   45   50   55   60   65   70   75   80
*   V    V    V    V    V    V    V    V    V    V    V    V    V    V    V    V
00001  1 1     VEH: R1 - TOLL ROAD LOADING No. 1- SINGLE TRUCK
* code 1001
Cline Avenue - Load Rating - Triple Box - 6 Webs - 111'-4" Wide
* code 1002
    2         1
* code 1003
*   5   10   15   20   25   30   35   40   45   50   55   60   65   70   75   80
*   V    V    V    V    V    V    V    V    V    V    V    V    V    V    V    V
250.0     168.0     111.33    1.0       1.0       1.3
* code 1004
    1    0    3
* code 1005
   90    1
* code 1005a
* location traffic lanes
7.667
* maximum and minimum truck
6.667     104.667   10.000
* code 1007, linear loads
0.7350    0.441
55.665    0.992
110.5983  0.441
* code 1201
   14    6    7    3    6
* code 1202 coordinates
0.0000    0.0
11.0000   0.0
11.0000   -7.938
26.8333   0.0
26.8333   -7.938
47.7500   0.0
47.7500   -7.938
63.5833   0.0
63.5833   -7.938
84.5000   0.0
84.5000   -7.938
100.3333  0.0
100.3333  -7.938
111.33    0.0
* code 1203 - profile 1
    5    2    4
0.0000    0.750
5.417     0.750
7.917     1.208
10.417    1.667
11.000    1.667
* code 1203 - profile 2
    7    2    3    4
0.000     1.667
0.583     1.667
5.583     0.750
7.917     0.750
10.2500   0.750
15.250    1.667
15.833    1.667
* code 1203 - profile 3
    7    2    3    4
0.000     1.667
0.583     1.667
5.583     0.750
10.458    0.750
15.333    0.750
20.333    1.667
20.917    1.667
* code 1203 - profile 4
    5    2    3    4
0.000     1.667
0.583     1.667
3.083     1.208
5.583     0.750
11.000    0.750
* code 1203 - profile 5
    7    2    3    4
0.000     1.458
0.583     1.458
1.583     0.458
7.917     0.458
14.2500   0.458
```

```
15.250    1.458
15.833    1.458
* code 1203 - profile 6
    5    2    3
0.000     1.167
0.833     1.167
3.771     1.167
6.708     1.167
7.938     1.167
* code 1204 - assembling boxgirder
    1    2    1
    2    4    2
    4    6    3
    6    8    2
    8   10    3
   10   12    2
   12   14    4
    3    5    5
    7    9    5
   11   13    5
    2    3    6
    4    5    6
    6    7    6
    8    9    6
   10   11    6
   12   13    6
* code 1205 control code
    1    2   13    1    1    0    4    5     1.0       1.0
* code 1206 wheels/axle
       0.0
       1.5
       6.0
       7.5 0.833
* code 1207 definition axles
0.00      18.00
10.00     18.00
14.00     18.00
24.00     18.00
28.00     18.00
* code 1208 - accuracy
0.00001   0.00001   0.00001   .00001    .00001
* code 1209 number sections
   50
   1A   1B   1R   2L   2A   2B   2C   2R   3L   3A   3B   3C   3R   4L
   4A   4B   4C   4R   5L   5A   5B   5C   5R   6L   6A   6B   6C   6R
   7L   7A   8A   8B  11L  11A  11B  12L  12A  12B  13L  13A  13B  14L
  14A  14B  15L  15A  15B  16L  16A  16B
* code 1210 - density conrete
0.156
* code 1211 - extra forces selfweight

* code 1212 - surcharge
2.7833
* code 1213 - Prestressing Layout - NONE
```

```
* start ; column 11-30 can be used to have your own text on the top of each page
*   5   10   15   20   25   30   35   40   45   50   55   60   65   70   75   80
*   V    V    V    V    V    V    V    V    V    V    V    V    V    V    V    V
00001  1 1     VEH: R2 - TOLL ROAD LOADING No. 2- SINGLE TRUCK
* code 1001
Cline Avenue - Load Rating - Triple Box - 6 Webs - 111'-4" Wide
* code 1002
    2         1
* code 1003
*   5   10   15   20   25   30   35   40   45   50   55   60   65   70   75   80
*   V    V    V    V    V    V    V    V    V    V    V    V    V    V    V    V
250.0     168.0     111.33    1.0       1.0       1.3
* code 1004
    1    0    3
* code 1005
   90    1
* code 1005a
* location traffic lanes
7.667
* maximum and minimum truck
6.667     104.667   10.000
* code 1007, linear loads
0.7350    0.441
55.665    0.992
110.5983  0.441
* code 1201
   14    6    7    3    6
* code 1202 coordinates
0.0000    0.0
11.0000   0.0
11.0000   -7.938
26.8333   0.0
26.8333   -7.938
47.7500   0.0
47.7500   -7.938
63.5833   0.0
63.5833   -7.938
84.5000   0.0
84.5000   -7.938
100.3333  0.0
100.3333  -7.938
111.33    0.0
* code 1203 - profile 1
    5    2    4
0.0000    0.750
5.417     0.750
7.917     1.208
10.417    1.667
11.000    1.667
* code 1203 - profile 2
    7    2    3    4
0.000     1.667
0.583     1.667
5.583     0.750
7.917     0.750
10.2500   0.750
15.250    1.667
15.833    1.667
* code 1203 - profile 3
    7    2    3    4
0.000     1.667
0.583     1.667
5.583     0.750
10.458    0.750
15.333    0.750
20.333    1.667
20.917    1.667
* code 1203 - profile 4
    5    2    3    4
0.000     1.667
0.583     1.667
3.083     1.208
5.583     0.750
11.000    0.750
* code 1203 - profile 5
    7    2    3    4
0.000     1.458
0.583     1.458
1.583     0.458
7.917     0.458
14.2500   0.458
```

```
15.250    1.458
15.833    1.458
* code 1203 - profile 6
    5    2    3
0.000     1.167
0.833     1.167
3.771     1.167
6.708     1.167
7.938     1.167
* code 1204 - assembling boxgirder
    1    2    1
    2    4    2
    4    6    3
    6    8    2
    8   10    3
   10   12    2
   12   14    4
    3    5    5
    7    9    5
   11   13    5
    2    3    6
    4    5    6
    6    7    6
    8    9    6
   10   11    6
   12   13    6
* code 1205 control code
    1    2   13    1    1    0    4    4     1.0       1.0
* code 1206 wheels/axle
       0.0
       1.5
       6.0
       7.5 0.833
* code 1207 definition axles
0.00      22.50
14.00     22.50
23.00     22.50
37.00     22.50
* code 1208 - accuracy
      .001      .005      .004       .01       0.1
* code 1209 number sections
   50
   1A   1B   1R   2L   2A   2B   2C   2R   3L   3A   3B   3C   3R   4L
   4A   4B   4C   4R   5L   5A   5B   5C   5R   6L   6A   6B   6C   6R
   7L   7A   8A   8B  11L  11A  11B  12L  12A  12B  13L  13A  13B  14L
  14A  14B  15L  15A  15B  16L  16A  16B
* code 1210 - density conrete
0.156
* code 1211 - extra forces selfweight

* code 1212 - surcharge
2.7833
* code 1213 - Prestressing Layout - NONE
```

```
* start ; column 11-30 can be used to have your own text on the top of each page
*   5   10   15   20   25   30   35   40   45   50   55   60   65   70   75   80
*   V    V    V    V    V    V    V    V    V    V    V    V    V    V    V    V
00001  1 1     VEH: R3 - TOLL ROAD LOADING No. 3 - SINGLE TRUCK
* code 1001
Cline Avenue - Load Rating - Triple Box - 6 Webs - 111'-4" Wide
* code 1002
    2         1
* code 1003
*   5   10   15   20   25   30   35   40   45   50   55   60   65   70   75   80
*   V    V    V    V    V    V    V    V    V    V    V    V    V    V    V    V
250.0     168.0     111.33    1.0       1.0       1.3
* code 1004
    1    0    3
* code 1005
  126    1
* code 1005a
* location traffic lanes
7.667
* maximum and minimum truck
6.667     104.667   10.000
* code 1007, linear loads
0.7350    0.441
55.665    0.992
110.5983  0.441
* code 1201
   14    6    7    3    6
* code 1202 coordinates
0.0000    0.0
11.0000   0.0
11.0000   -7.938
26.8333   0.0
26.8333   -7.938
47.7500   0.0
47.7500   -7.938
63.5833   0.0
63.5833   -7.938
84.5000   0.0
84.5000   -7.938
100.3333  0.0
100.3333  -7.938
111.33    0.0
* code 1203 - profile 1
    5    2    4
0.0000    0.750
5.417     0.750
7.917     1.208
10.417    1.667
11.000    1.667
* code 1203 - profile 2
    7    2    3    4
0.000     1.667
0.583     1.667
5.583     0.750
7.917     0.750
10.2500   0.750
15.250    1.667
15.833    1.667
* code 1203 - profile 3
    7    2    3    4
0.000     1.667
0.583     1.667
5.583     0.750
10.458    0.750
15.333    0.750
20.333    1.667
20.917    1.667
* code 1203 - profile 4
    5    2    3    4
0.000     1.667
0.583     1.667
3.083     1.208
5.583     0.750
11.000    0.750
* code 1203 - profile 5
    7    2    3    4
0.000     1.458
0.583     1.458
1.583     0.458
7.917     0.458
14.2500   0.458
```

```
15.250    1.458
15.833    1.458
* code 1203 - profile 6
    5    2    3
0.000     1.167
0.833     1.167
3.771     1.167
6.708     1.167
7.938     1.167
* code 1204 - assembling boxgirder
    1    2    1
    2    4    2
    4    6    3
    6    8    2
    8   10    3
   10   12    2
   12   14    4
    3    5    5
    7    9    5
   11   13    5
    2    3    6
    4    5    6
    6    7    6
    8    9    6
   10   11    6
   12   13    6
* code 1205 control code
    1    2   13    1    1    0    4    7     1.0       1.0
* code 1206 wheels/axle
       0.0
       1.5
       6.0
       7.5 0.833
* code 1207 definition axles
0.00      18.00
10.00     18.00
14.00     18.00
40.00     18.00
44.00     18.00
56.00     18.00
76.00     18.00
* code 1208 - accuracy
0.00001   0.00001   0.00001   .00001    .00001
* code 1209 number sections
   50
   1A   1B   1R   2L   2A   2B   2C   2R   3L   3A   3B   3C   3R   4L
   4A   4B   4C   4R   5L   5A   5B   5C   5R   6L   6A   6B   6C   6R
   7L   7A   8A   8B  11L  11A  11B  12L  12A  12B  13L  13A  13B  14L
  14A  14B  15L  15A  15B  16L  16A  16B
* code 1210 - density conrete
0.156
* code 1211 - extra forces selfweight

* code 1212 - surcharge
2.7833
* code 1213 - Prestressing Layout - NONE
```

```
* start ; column 11-30 can be used to have your own text on the top of each page
*   5   10   15   20   25   30   35   40   45   50   55   60   65   70   75   80
*   V    V    V    V    V    V    V    V    V    V    V    V    V    V    V    V
00001  1 1     VEH: R4 - MICHIGAN TRUCK TRAIN No.5 - SINGLE TRUCK
* code 1001
Cline Avenue - Load Rating - Double Box - 3 Webs - 48'-4" Wide
* code 1002
    2         1
* code 1003
*   5   10   15   20   25   30   35   40   45   50   55   60   65   70   75   80
*   V    V    V    V    V    V    V    V    V    V    V    V    V    V    V    V
250.0     168.0     111.33    1.0       1.0       1.3
* code 1004
    1    0    3
* code 1005
  134    1
* code 1005a
* location traffic lanes
7.667
* maximum and minimum truck
6.667     104.667   10.000
* code 1007, linear loads
0.7350    0.441
55.665    0.992
110.5983  0.441
* code 1201
   14    6    7    3    6
* code 1202 coordinates
0.0000    0.0
11.0000   0.0
11.0000   -7.938
26.8333   0.0
26.8333   -7.938
47.7500   0.0
47.7500   -7.938
63.5833   0.0
63.5833   -7.938
84.5000   0.0
84.5000   -7.938
100.3333  0.0
100.3333  -7.938
111.33    0.0
* code 1203 - profile 1
    5    2    4
0.0000    0.750
5.417     0.750
7.917     1.208
10.417    1.667
11.000    1.667
* code 1203 - profile 2
    7    2    3    4
0.000     1.667
0.583     1.667
5.583     0.750
7.917     0.750
10.2500   0.750
15.250    1.667
15.833    1.667
* code 1203 - profile 3
    7    2    3    4
0.000     1.667
0.583     1.667
5.583     0.750
10.458    0.750
15.333    0.750
20.333    1.667
20.917    1.667
* code 1203 - profile 4
    5    2    3    4
0.000     1.667
0.583     1.667
3.083     1.208
5.583     0.750
11.000    0.750
* code 1203 - profile 5
    7    2    3    4
0.000     1.458
0.583     1.458
1.583     0.458
7.917     0.458
14.2500   0.458
```

1I_A_WB_R4_EL.txt 9/9/2009

```
15.250    1.458
15.833    1.458
* code 1203 - profile 6
    5    2    3
0.000     1.167
0.833     1.167
3.771     1.167
6.708     1.167
7.938     1.167
* code 1204 - assembling boxgirder
    1    2    1
    2    4    2
    4    6    3
    6    8    2
    8   10    3
   10   12    2
   12   14    4
    3    5    5
    7    9    5
   11   13    5
    2    3    6
    4    5    6
    6    7    6
    8    9    6
   10   11    6
   12   13    6
* code 1205 control code
    1    2   13    1    1    0    4    8     1.0       1.0
* code 1206 wheels/axle
       0.0
       1.5
       6.0
       7.5 0.833
* code 1207 definition axles
0.00      12.00
9.00      16.00
12.50     16.00
21.50     18.00
30.50     18.00
39.50     18.00
48.50     18.00
57.50     18.00
* code 1208 - accuracy
0.00001   0.00001   0.00001   .00001    .00001
* code 1209 number sections
   50
   1A   1B   1R   2L   2A   2B   2C   2R   3L   3A   3B   3C   3R   4L
   4A   4B   4C   4R   5L   5A   5B   5C   5R   6L   6A   6B   6C   6R
   7L   7A   8A   8B  11L  11A  11B  12L  12A  12B  13L  13A  13B  14L
  14A  14B  15L  15A  15B  16L  16A  16B
* code 1210 - density conrete
0.156
* code 1211 - extra forces selfweight

* code 1212 - surcharge
2.7833
* code 1213 - Prestressing Layout - NONE
```

```
* start ; column 11-30 can be used to have your own text on the top of each page
*   5   10   15   20   25   30   35   40   45   50   55   60   65   70   75   80
*   V    V    V    V    V    V    V    V    V    V    V    V    V    V    V    V
00001  1 1     VEH: R5 - MICHIGAN TRUCK TRAIN No. 8- SINGLE TRUCK
* code 1001
Cline Avenue - Load Rating - Triple Box - 6 Webs - 111'-4" Wide
* code 1002
    2         1
* code 1003
*   5   10   15   20   25   30   35   40   45   50   55   60   65   70   75   80
*   V    V    V    V    V    V    V    V    V    V    V    V    V    V    V    V
250.0     168.0     111.33    1.0       1.0       1.3
* code 1004
    1    0    3
* code 1005
* Vehicle weight is 134.2 Kips, rounded to 135
  135    1
* code 1005a
* location traffic lanes
7.667
* maximum and minimum truck
6.667     104.667   10.000
* code 1007, linear loads
0.7350    0.441
55.665    0.992
110.5983  0.441
* code 1201
   14    6    7    3    6
* code 1202 coordinates
0.0000    0.0
11.0000   0.0
11.0000   -7.938
26.8333   0.0
26.8333   -7.938
47.7500   0.0
47.7500   -7.938
63.5833   0.0
63.5833   -7.938
84.5000   0.0
84.5000   -7.938
100.3333  0.0
100.3333  -7.938
111.33    0.0
* code 1203 - profile 1
    5    2    4
0.0000    0.750
5.417     0.750
7.917     1.208
10.417    1.667
11.000    1.667
* code 1203 - profile 2
    7    2    3    4
0.000     1.667
0.583     1.667
5.583     0.750
7.917     0.750
10.2500   0.750
15.250    1.667
15.833    1.667
* code 1203 - profile 3
    7    2    3    4
0.000     1.667
0.583     1.667
5.583     0.750
10.458    0.750
15.333    0.750
20.333    1.667
20.917    1.667
* code 1203 - profile 4
    5    2    3    4
0.000     1.667
0.583     1.667
3.083     1.208
5.583     0.750
11.000    0.750
* code 1203 - profile 5
    7    2    3    4
0.000     1.458
0.583     1.458
1.583     0.458
7.917     0.458
```

1I_A_WB_R5_EL.txt 9/9/2009

```
14.2500   0.458
15.250    1.458
15.833    1.458
* code 1203 - profile 6
    5    2    3
0.000     1.167
0.833     1.167
3.771     1.167
6.708     1.167
7.938     1.167
* code 1204 - assembling boxgirder
    1    2    1
    2    4    2
    4    6    3
    6    8    2
    8   10    3
   10   12    2
   12   14    4
    3    5    5
    7    9    5
   11   13    5
    2    3    6
    4    5    6
    6    7    6
    8    9    6
   10   11    6
   12   13    6
* code 1205 control code
    1    2   13    1    1    0    4   11     1.0       1.0
* code 1206 wheels/axle
       0.0
       1.5
       6.0
       7.5 0.833
* code 1207 definition axles
0.00      12.00
9.00      13.40
12.50     13.40
21.50     10.90
25.00     10.90
28.50     10.90
32.00     10.90
35.50     10.90
39.00     10.90
48.00     15.00
57.00     15.00
* code 1208 - accuracy
0.00001   0.00001   0.00001   .00001    .00001
* code 1209 number sections
   50
   1A   1B   1R   2L   2A   2B   2C   2R   3L   3A   3B   3C   3R   4L
   4A   4B   4C   4R   5L   5A   5B   5C   5R   6L   6A   6B   6C   6R
   7L   7A   8A   8B  11L  11A  11B  12L  12A  12B  13L  13A  13B  14L
  14A  14B  15L  15A  15B  16L  16A  16B
* code 1210 - density conrete
0.156
* code 1211 - extra forces selfweight

* code 1212 - surcharge
2.7833
* code 1213 - Prestressing Layout - NONE
```

```
* start ; column 11-30 can be used to have your own text on the top of each page
*   5   10   15   20   25   30   35   40   45   50   55   60   65   70   75   80
*   V    V    V    V    V    V    V    V    V    V    V    V    V    V    V    V
00001  1 1     VEH: S1-SPECIAL TRUCK 11 AXLE-SINGLE TRUCK
* code 1001
Cline Avenue - Load Rating - Triple Box-6 Webs-111'-4" Wide
* code 1002
    2         1
* code 1003
*   5   10   15   20   25   30   35   40   45   50   55   60   65   70   75   80
*   V    V    V    V    V    V    V    V    V    V    V    V    V    V    V    V
250.0     168.0     111.33    1.0       1.0       1.3
* code 1004
    1    0    3
* code 1005
  258    1
* code 1005a
* location traffic lanes
7.667
* maximum and minimum truck
6.667     104.667   10.000
* code 1007, linear loads
0.7350    0.441
55.665    0.992
110.5983  0.441
* code 1201
   14    6    7    3    6
* code 1202 coordinates
0.0000    0.0
11.0000   0.0
11.0000   -7.938
26.8333   0.0
26.8333   -7.938
47.7500   0.0
47.7500   -7.938
63.5833   0.0
63.5833   -7.938
84.5000   0.0
84.5000   -7.938
100.3333  0.0
100.3333  -7.938
111.33    0.0
* code 1203 - profile 1
    5    2    4
0.0000    0.750
5.417     0.750
7.917     1.208
10.417    1.667
11.000    1.667
* code 1203 - profile 2
    7    2    3    4
0.000     1.667
0.583     1.667
5.583     0.750
7.917     0.750
10.2500   0.750
15.250    1.667
15.833    1.667
* code 1203 - profile 3
    7    2    3    4
0.000     1.667
0.583     1.667
5.583     0.750
10.458    0.750
15.333    0.750
20.333    1.667
20.917    1.667
* code 1203 - profile 4
    5    2    3    4
0.000     1.667
0.583     1.667
3.083     1.208
5.583     0.750
11.000    0.750
* code 1203 - profile 5
    7    2    3    4
0.000     1.458
0.583     1.458
1.583     0.458
7.917     0.458
14.2500   0.458
```

```
15.250    1.458
15.833    1.458
* code 1203 - profile 6
    5    2    3
0.000     1.167
0.833     1.167
3.771     1.167
6.708     1.167
7.938     1.167
* code 1204 - assembling boxgirder
    1    2    1
    2    4    2
    4    6    3
    6    8    2
    8   10    3
   10   12    2
   12   14    4
    3    5    5
    7    9    5
   11   13    5
    2    3    6
    4    5    6
    6    7    6
    8    9    6
   10   11    6
   12   13    6
* code 1205 control code
    1    2   13    1    1    0    4   11     1.0       1.0
* code 1206 wheels/axle
       0.0
       1.5
       6.0
       7.5 0.833
* code 1207 definition axles
0.00      12.00
11.50     24.60
16.67     24.60
21.67     24.60
34.83     24.60
39.33     24.60
89.92     24.60
94.42     24.60
98.92     24.60
112.50     24.60
117.00     24.60
* code 1208 - accuracy
0.00001   0.00001   0.00001   .00001    .00001
* code 1209 number sections
   50
   1A   1B   1R   2L   2A   2B   2C   2R   3L   3A   3B   3C   3R   4L
   4A   4B   4C   4R   5L   5A   5B   5C   5R   6L   6A   6B   6C   6R
   7L   7A   8A   8B  11L  11A  11B  12L  12A  12B  13L  13A  13B  14L
  14A  14B  15L  15A  15B  16L  16A  16B
* code 1210 - density conrete
0.156
* code 1211 - extra forces selfweight

* code 1212 - surcharge
2.7833
* code 1213 - Prestressing Layout - NONE
```

```
* start ; column 11-30 can be used to have your own text on the top of each page
*   5   10   15   20   25   30   35   40   45   50   55   60   65   70   75   80
*   V    V    V    V    V    V    V    V    V    V    V    V    V    V    V    V
00001  1 1     VEH: S2 - SPECIAL TRUCK - 13 AXLE - SINGLE TRUCK
* code 1001
Cline Avenue - Load Rating - Triple Box - 6 Webs - 111'-4" Wide
* code 1002
    2         1
* code 1003
*   5   10   15   20   25   30   35   40   45   50   55   60   65   70   75   80
*   V    V    V    V    V    V    V    V    V    V    V    V    V    V    V    V
250.0     168.0     111.33    1.0       1.0       1.3
* code 1004
    1    0    3
* code 1005
  267    1
* code 1005a
* location traffic lanes
7.667
* maximum and minimum truck
6.667     104.667   10.000
* code 1007, linear loads
0.7350    0.441
55.665    0.992
110.5983  0.441
* code 1201
   14    6    7    3    6
* code 1202 coordinates
0.0000    0.0
11.0000   0.0
11.0000   -7.938
26.8333   0.0
26.8333   -7.938
47.7500   0.0
47.7500   -7.938
63.5833   0.0
63.5833   -7.938
84.5000   0.0
84.5000   -7.938
100.3333  0.0
100.3333  -7.938
111.33    0.0
* code 1203 - profile 1
    5    2    4
0.0000    0.750
5.417     0.750
7.917     1.208
10.417    1.667
11.000    1.667
* code 1203 - profile 2
    7    2    3    4
0.000     1.667
0.583     1.667
5.583     0.750
7.917     0.750
10.2500   0.750
15.250    1.667
15.833    1.667
* code 1203 - profile 3
    7    2    3    4
0.000     1.667
0.583     1.667
5.583     0.750
10.458    0.750
15.333    0.750
20.333    1.667
20.917    1.667
* code 1203 - profile 4
    5    2    3    4
0.000     1.667
0.583     1.667
3.083     1.208
5.583     0.750
11.000    0.750
* code 1203 - profile 5
    7    2    3    4
0.000     1.458
0.583     1.458
1.583     0.458
7.917     0.458
14.2500   0.458
```

```
15.250    1.458
15.833    1.458
* code 1203 - profile 6
    5    2    3
0.000     1.167
0.833     1.167
3.771     1.167
6.708     1.167
7.938     1.167
* code 1204 - assembling boxgirder
    1    2    1
    2    4    2
    4    6    3
    6    8    2
    8   10    3
   10   12    2
   12   14    4
    3    5    5
    7    9    5
   11   13    5
    2    3    6
    4    5    6
    6    7    6
    8    9    6
   10   11    6
   12   13    6
* code 1205 control code
    1    2   13    1    1    0    4   13     1.0       1.0
* code 1206 wheels/axle
       0.0
       1.5
       6.0
       7.5 0.833
* code 1207 definition axles
0.00      15.00
16.50     21.00
21.00     21.00
25.50     21.00
39.50     21.00
44.00     21.00
48.50     21.00
96.50     21.00
101.00    21.00
105.50    21.00
121.00    21.00
125.50    21.00
130.00    21.00
* code 1208 - accuracy
0.00001   0.00001   0.00001   .00001    .00001
* code 1209 number sections
   50
   1A   1B   1R   2L   2A   2B   2C   2R   3L   3A   3B   3C   3R   4L
   4A   4B   4C   4R   5L   5A   5B   5C   5R   6L   6A   6B   6C   6R
   7L   7A   8A   8B  11L  11A  11B  12L  12A  12B  13L  13A  13B  14L
  14A  14B  15L  15A  15B  16L  16A  16B
* code 1210 - density conrete
0.156
* code 1211 - extra forces selfweight

* code 1212 - surcharge
2.7833
* code 1213 - Prestressing Layout - NONE
```

```
* start ; column 11-30 can be used to have your own text on the top of each page
*   5   10   15   20   25   30   35   40   45   50   55   60   65   70   75   80
*   V    V    V    V    V    V    V    V    V    V    V    V    V    V    V    V
00001  1 1     VEH: S3 - SPECIAL TRUCK - 14 AXLE- SINGLE TRUCK
* code 1001
Cline Avenue - Load Rating - Triple Box - 6 Webs - 111'-4" Wide
* code 1002
    2         1
* code 1003
*   5   10   15   20   25   30   35   40   45   50   55   60   65   70   75   80
*   V    V    V    V    V    V    V    V    V    V    V    V    V    V    V    V
250.0     168.0     111.33    1.0       1.0       1.3
* code 1004
    1    0    3
* code 1005
  350    1
* code 1005a
* location traffic lanes
7.667
* maximum and minimum truck
6.667     104.667   10.000
* code 1007, linear loads
0.7350    0.441
55.665    0.992
110.5983  0.441
* code 1201
   14    6    7    3    6
* code 1202 coordinates
0.0000    0.0
11.0000   0.0
11.0000   -7.938
26.8333   0.0
26.8333   -7.938
47.7500   0.0
47.7500   -7.938
63.5833   0.0
63.5833   -7.938
84.5000   0.0
84.5000   -7.938
100.3333  0.0
100.3333  -7.938
111.33    0.0
* code 1203 - profile 1
    5    2    4
0.0000    0.750
5.417     0.750
7.917     1.208
10.417    1.667
11.000    1.667
* code 1203 - profile 2
    7    2    3    4
0.000     1.667
0.583     1.667
5.583     0.750
7.917     0.750
10.2500   0.750
15.250    1.667
15.833    1.667
* code 1203 - profile 3
    7    2    3    4
0.000     1.667
0.583     1.667
5.583     0.750
10.458    0.750
15.333    0.750
20.333    1.667
20.917    1.667
* code 1203 - profile 4
    5    2    3    4
0.000     1.667
0.583     1.667
3.083     1.208
5.583     0.750
11.000    0.750
* code 1203 - profile 5
    7    2    3    4
0.000     1.458
0.583     1.458
1.583     0.458
7.917     0.458
14.2500   0.458
```

```
15.250    1.458
15.833    1.458
* code 1203 - profile 6
    5    2    3
0.000     1.167
0.833     1.167
3.771     1.167
6.708     1.167
7.938     1.167
* code 1204 - assembling boxgirder
    1    2    1
    2    4    2
    4    6    3
    6    8    2
    8   10    3
   10   12    2
   12   14    4
    3    5    5
    7    9    5
   11   13    5
    2    3    6
    4    5    6
    6    7    6
    8    9    6
   10   11    6
   12   13    6
* code 1205 control code
    1    2   13    1    1    0    4   14     1.0       1.0
* code 1206 wheels/axle
       0.0
       1.5
       6.0
       7.5 0.833
* code 1207 definition axles
0.00      13.00
14.50     25.00
19.00     25.00
23.50     25.00
50.50     23.50
54.67     23.50
58.83     23.50
102.83    23.50
107.33    28.00
111.83    28.00
116.33    28.00
132.17    28.00
136.67    28.00
141.17    28.00
* code 1208 - accuracy
0.00001   0.00001   0.00001   .00001    .00001
* code 1209 number sections
   50
   1A   1B   1R   2L   2A   2B   2C   2R   3L   3A   3B   3C   3R   4L
   4A   4B   4C   4R   5L   5A   5B   5C   5R   6L   6A   6B   6C   6R
   7L   7A   8A   8B  11L  11A  11B  12L  12A  12B  13L  13A  13B  14L
  14A  14B  15L  15A  15B  16L  16A  16B
* code 1210 - density conrete
0.156
* code 1211 - extra forces selfweight

* code 1212 - surcharge
2.7833
* code 1213 - Prestressing Layout - NONE
```

```
* start ; column 11-30 can be used to have your own text on the top of each page
*   5   10   15   20   25   30   35   40   45   50   55   60   65   70   75   80
*   V    V    V    V    V    V    V    V    V    V    V    V    V    V    V    V
00001  1 1     VEH: S4 - SUPER LOAD -19 AXLES- SINGLE TRUCK
* code 1001
Cline Avenue - Load Rating - Triple Box - 6 Webs - 111'-4" Wide
* code 1002
    2         1
* code 1003
*   5   10   15   20   25   30   35   40   45   50   55   60   65   70   75   80
*   V    V    V    V    V    V    V    V    V    V    V    V    V    V    V    V
250.0     168.0     111.33    1.0       1.0       1.3
* code 1004
    1    0    3
* code 1005
  305    1
* code 1005a
* location traffic lanes
7.667
* maximum and minimum truck
6.667     104.667   10.000
* code 1007, linear loads
0.7350    0.441
55.665    0.992
110.5983  0.441
* code 1201
   14    6    7    3    6
* code 1202 coordinates
0.0000    0.0
11.0000   0.0
11.0000   -7.938
26.8333   0.0
26.8333   -7.938
47.7500   0.0
47.7500   -7.938
63.5833   0.0
63.5833   -7.938
84.5000   0.0
84.5000   -7.938
100.3333  0.0
100.3333  -7.938
111.33    0.0
* code 1203 - profile 1
    5    2    4
0.0000    0.750
5.417     0.750
7.917     1.208
10.417    1.667
11.000    1.667
* code 1203 - profile 2
    7    2    3    4
0.000     1.667
0.583     1.667
5.583     0.750
7.917     0.750
10.2500   0.750
15.250    1.667
15.833    1.667
* code 1203 - profile 3
    7    2    3    4
0.000     1.667
0.583     1.667
5.583     0.750
10.458    0.750
15.333    0.750
20.333    1.667
20.917    1.667
* code 1203 - profile 4
    5    2    3    4
0.000     1.667
0.583     1.667
3.083     1.208
5.583     0.750
11.000    0.750
* code 1203 - profile 5
    7    2    3    4
0.000     1.458
0.583     1.458
1.583     0.458
7.917     0.458
14.2500   0.458
```

```
15.250    1.458
15.833    1.458
* code 1203 - profile 6
    5    2    3
0.000     1.167
0.833     1.167
3.771     1.167
6.708     1.167
7.938     1.167
* code 1204 - assembling boxgirder
    1    2    1
    2    4    2
    4    6    3
    6    8    2
    8   10    3
   10   12    2
   12   14    4
    3    5    5
    7    9    5
   11   13    5
    2    3    6
    4    5    6
    6    7    6
    8    9    6
   10   11    6
   12   13    6
* code 1205 control code
    1    2   13    1    1    0    4   19     1.0       1.0
* code 1206 wheels/axle
       0.0
       1.5
       6.0
       7.5 0.833
* code 1207 definition axles
0.00      13.00
13.50     16.48
17.83     16.48
31.33     16.48
35.42     15.99
39.50     15.99
45.50     15.99
49.58     16.37
53.67     16.37
103.58    16.37
107.67    16.64
114.17    16.64
118.25    15.15
122.33    15.15
126.42    15.15
135.92    15.15
140.00    17.20
144.08    17.20
148.17    17.20
* code 1208 - accuracy
0.00001   0.00001   0.00001   .00001    .00001
* code 1209 number sections
   50
   1A   1B   1R   2L   2A   2B   2C   2R   3L   3A   3B   3C   3R   4L
   4A   4B   4C   4R   5L   5A   5B   5C   5R   6L   6A   6B   6C   6R
   7L   7A   8A   8B  11L  11A  11B  12L  12A  12B  13L  13A  13B  14L
  14A  14B  15L  15A  15B  16L  16A  16B
* code 1210 - density conrete
0.156
* code 1211 - extra forces selfweight

* code 1212 - surcharge
2.7833
* code 1213 - Prestressing Layout - NONE
```

```
* start ; column 11-30 can be used to have your own text on the top of each page
*   5   10   15   20   25   30   35   40   45   50   55   60   65   70   75   80
*   V    V    V    V    V    V    V    V    V    V    V    V    V    V    V    V
00001  1 1     VEH: S5 - SUPERLOAD - 19 AXLE  - SINGLE TRUCK
* code 1001
Cline Avenue - Load Rating - Triple Box - 6 Webs - 111'-4" Wide
* code 1002
    2         1
* code 1003
*   5   10   15   20   25   30   35   40   45   50   55   60   65   70   75   80
*   V    V    V    V    V    V    V    V    V    V    V    V    V    V    V    V
250.0     168.0     111.33    1.0       1.0       1.3
* code 1004
    1    0    3
* code 1005
  480    1
* code 1005a
* location traffic lanes
7.667
* maximum and minimum truck
6.667     104.667   10.000
* code 1007, linear loads
0.7350    0.441
55.665    0.992
110.5983  0.441
* code 1201
   14    6    7    3    6
* code 1202 coordinates
0.0000    0.0
11.0000   0.0
11.0000   -7.938
26.8333   0.0
26.8333   -7.938
47.7500   0.0
47.7500   -7.938
63.5833   0.0
63.5833   -7.938
84.5000   0.0
84.5000   -7.938
100.3333  0.0
100.3333  -7.938
111.33    0.0
* code 1203 - profile 1
    5    2    4
0.0000    0.750
5.417     0.750
7.917     1.208
10.417    1.667
11.000    1.667
* code 1203 - profile 2
    7    2    3    4
0.000     1.667
0.583     1.667
5.583     0.750
7.917     0.750
10.2500   0.750
15.250    1.667
15.833    1.667
* code 1203 - profile 3
    7    2    3    4
0.000     1.667
0.583     1.667
5.583     0.750
10.458    0.750
15.333    0.750
20.333    1.667
20.917    1.667
* code 1203 - profile 4
    5    2    3    4
0.000     1.667
0.583     1.667
3.083     1.208
5.583     0.750
11.000    0.750
* code 1203 - profile 5
    7    2    3    4
0.000     1.458
0.583     1.458
1.583     0.458
7.917     0.458
14.2500   0.458
```

```
15.250    1.458
15.833    1.458
* code 1203 - profile 6
    5    2    3
0.000     1.167
0.833     1.167
3.771     1.167
6.708     1.167
7.938     1.167
* code 1204 - assembling boxgirder
    1    2    1
    2    4    2
    4    6    3
    6    8    2
    8   10    3
   10   12    2
   12   14    4
    3    5    5
    7    9    5
   11   13    5
    2    3    6
    4    5    6
    6    7    6
    8    9    6
   10   11    6
   12   13    6
* code 1205 control code
    1    2   13    1    1    0    4   19     1.0       1.0
* code 1206 wheels/axle
       0.0
       1.5
       6.0
       7.5 0.833
* code 1207 definition axles
0.00      12.88
12.50     25.95
17.50     25.95
31.58     25.95
36.58     25.95
41.58     25.95
55.67     25.95
60.67     25.95
65.67     25.95
115.67    25.95
120.67    25.95
125.67    25.95
139.75    25.95
144.75    25.95
149.75    25.95
163.83    25.95
168.83    25.95
173.83    25.95
178.83    25.95
* code 1208 - accuracy
0.00001   0.00001   0.00001   .00001    .00001
* code 1209 number sections
   50
   1A   1B   1R   2L   2A   2B   2C   2R   3L   3A   3B   3C   3R   4L
   4A   4B   4C   4R   5L   5A   5B   5C   5R   6L   6A   6B   6C   6R
   7L   7A   8A   8B  11L  11A  11B  12L  12A  12B  13L  13A  13B  14L
  14A  14B  15L  15A  15B  16L  16A  16B
* code 1210 - density conrete
0.156
* code 1211 - extra forces selfweight

* code 1212 - surcharge
2.7833
* code 1213 - Prestressing Layout - NONE
```

I_A_WB_HL93_truck_EL.txt 9/9/2009

```
* start ; column 11-30 can be used to have your own text on the top of each page
00001    0    0
* code 1001
Cline Avenue - Load Rating - Triple Box - 6 Webs - 111'-4" Wide
* code 1002
    2         1
* code 1003
*   5   10   15   20   25   30   35   40   45   50   55   60   65   70   75   80
*   V    V    V    V    V    V    V    V    V    V    V    V    V    V    V    V
250.0     168.0     111.33    1.0       1.0       1.3
* code 1004
    2    0    3
* code 1005
   72
* code 1005a
* location traffic lanes
7.667     19.667
* maximum and minimum truck
6.667     104.667   10.000
* code 1007, linear loads
0.7350    0.441
55.665    0.992
110.5983  0.441
* code 1201
   14    6    7    3    6
* code 1202 coordinates
0.0000    0.0
11.0000   0.0
11.0000   -7.938
26.8333   0.0
26.8333   -7.938
47.7500   0.0
47.7500   -7.938
63.5833   0.0
63.5833   -7.938
84.5000   0.0
84.5000   -7.938
100.3333  0.0
100.3333  -7.938
111.33    0.0
* code 1203 - profile 1
    5    2    4
0.0000    0.750
5.417     0.750
7.917     1.208
10.417    1.667
11.000    1.667
* code 1203 - profile 2
    7    2    3    4
0.000     1.667
0.583     1.667
5.583     0.750
7.917     0.750
10.2500   0.750
15.250    1.667
15.833    1.667
* code 1203 - profile 3
    7    2    3    4
0.000     1.667
0.583     1.667
5.583     0.750
10.458    0.750
15.333    0.750
20.333    1.667
20.917    1.667
* code 1203 - profile 4
    5    2    3    4
0.000     1.667
0.583     1.667
3.083     1.208
5.583     0.750
11.000    0.750
* code 1203 - profile 5
    7    2    3    4
0.000     1.458
0.583     1.458
1.583     0.458
7.917     0.458
14.2500   0.458
15.250    1.458
15.833    1.458
```

```
I_A_WB_HL93_truck_EL.txt                                                    9/9/2009

* code 1203 - profile 6
    5    2    3
0.000     1.167
0.833     1.167
3.771     1.167
6.708     1.167
7.938     1.167
* code 1204 - assembling boxgirder
    1    2    1
    2    4    2
    4    6    3
    6    8    2
    8   10    3
   10   12    2
   12   14    4
    3    5    5
    7    9    5
   11   13    5
    2    3    6
    4    5    6
    6    7    6
    8    9    6
   10   11    6
   12   13    6
* code 1205 control code
    1    2   13    1    1    0    4    3     1.0       1.0
* code 1206 wheels/axle
       0.0
       1.5
       6.0
       7.5 0.833
* code 1207 definition axles
0.0       0.1
14.0      0.4
28.0      0.4
* code 1208 - accuracy
0.00001   0.00001   0.00001   .00001    .00001
* code 1209 number sections
   50
   1A   1B   1R   2L   2A   2B   2C   2R   3L   3A   3B   3C   3R   4L
   4A   4B   4C   4R   5L   5A   5B   5C   5R   6L   6A   6B   6C   6R
   7L   7A   8A   8B  11L  11A  11B  12L  12A  12B  13L  13A  13B  14L
  14A  14B  15L  15A  15B  16L  16A  16B
* code 1210 - density conrete
0.156
* code 1211 - extra forces selfweight

* code 1212 - surcharge
2.7833
* code 1213 - Prestressing Layout - NONE
```

```
* start ; column 11-30 can be used to have your own text on the top of each page
*   5   10   15   20   25   30   35   40   45   50   55   60   65   70   75   80
*   V    V    V    V    V    V    V    V    V    V    V    V    V    V    V    V
00001  1 1     VEH: HL93- TANDEM
* code 1001
Cline Avenue - Load Rating - Triple Box - 6 Webs - 111'-4" Wide
* code 1002
    2         1
* code 1003
*   5   10   15   20   25   30   35   40   45   50   55   60   65   70   75   80
*   V    V    V    V    V    V    V    V    V    V    V    V    V    V    V    V
250.0     168.0     111.33    1.0       1.0       1.3
* code 1004
    2    0    3
* code 1005
   50
* code 1005a
* location traffic lanes
7.667     19.667
* maximum and minimum truck
6.667     104.667   10.000
* code 1007, linear loads
0.7350    0.441
55.665    0.992
110.5983  0.441
* code 1201
   14    6    7    3    6
* code 1202 coordinates
0.0000    0.0
11.0000   0.0
11.0000   -7.938
26.8333   0.0
26.8333   -7.938
47.7500   0.0
47.7500   -7.938
63.5833   0.0
63.5833   -7.938
84.5000   0.0
84.5000   -7.938
100.3333  0.0
100.3333  -7.938
111.33    0.0
* code 1203 - profile 1
    5    2    4
0.0000    0.750
5.417     0.750
7.917     1.208
10.417    1.667
11.000    1.667
* code 1203 - profile 2
    7    2    3    4
0.000     1.667
0.583     1.667
5.583     0.750
7.917     0.750
10.2500   0.750
15.250    1.667
15.833    1.667
* code 1203 - profile 3
    7    2    3    4
0.000     1.667
0.583     1.667
5.583     0.750
10.458    0.750
15.333    0.750
20.333    1.667
20.917    1.667
* code 1203 - profile 4
    5    2    3    4
0.000     1.667
0.583     1.667
3.083     1.208
5.583     0.750
11.000    0.750
* code 1203 - profile 5
    7    2    3    4
0.000     1.458
0.583     1.458
1.583     0.458
7.917     0.458
14.2500   0.458
```

I_A_WB_HL93_tandem_EL.txt 9/9/2009

```
15.250    1.458
15.833    1.458
* code 1203 - profile 6
    5    2    3
0.000     1.167
0.833     1.167
3.771     1.167
6.708     1.167
7.938     1.167
* code 1204 - assembling boxgirder
    1    2    1
    2    4    2
    4    6    3
    6    8    2
    8   10    3
   10   12    2
   12   14    4
    3    5    5
    7    9    5
   11   13    5
    2    3    6
    4    5    6
    6    7    6
    8    9    6
   10   11    6
   12   13    6
* code 1205 control code
    1    2   13    1    1    0    4    2     1.0       1.0
* code 1206 wheels/axle
       0.0
       1.5
       6.0
       7.5 0.833
* code 1207 definition axles
0.0       0.5
4.0       0.5
* code 1208 - accuracy
0.00001   0.00001   0.00001   .00001    .00001
* code 1209 number sections
   50
   1A   1B   1R   2L   2A   2B   2C   2R   3L   3A   3B   3C   3R   4L
   4A   4B   4C   4R   5L   5A   5B   5C   5R   6L   6A   6B   6C   6R
   7L   7A   8A   8B  11L  11A  11B  12L  12A  12B  13L  13A  13B  14L
  14A  14B  15L  15A  15B  16L  16A  16B
* code 1210 - density conrete
0.156
* code 1211 - extra forces selfweight

* code 1212 - surcharge
2.7833
* code 1213 - Prestressing Layout - NONE
```

```
* start ; column 11-30 can be used to have your own text on the top of each page
*   5   10   15   20   25   30   35   40   45   50   55   60   65   70   75   80
*   V    V    V    V    V    V    V    V    V    V    V    V    V    V    V    V
00001  1 1     VEH: R1 - TOLL ROAD LOADING No. 1
* code 1001
Cline Avenue - Load Rating - Triple Box - 6 Webs - 111'-4" Wide
* code 1002
    2         1
* code 1003
*   5   10   15   20   25   30   35   40   45   50   55   60   65   70   75   80
*   V    V    V    V    V    V    V    V    V    V    V    V    V    V    V    V
250.0     168.0     111.33    1.0       1.0       1.3
* code 1004
    2    0    3
* code 1005
   90
* code 1005a
* location traffic lanes
7.667     19.667
* maximum and minimum truck
6.667     104.667   10.000
* code 1007, linear loads
0.7350    0.441
55.665    0.992
110.5983  0.441
* code 1201
   14    6    7    3    6
* code 1202 coordinates
0.0000    0.0
11.0000   0.0
11.0000   -7.938
26.8333   0.0
26.8333   -7.938
47.7500   0.0
47.7500   -7.938
63.5833   0.0
63.5833   -7.938
84.5000   0.0
84.5000   -7.938
100.3333  0.0
100.3333  -7.938
111.33    0.0
* code 1203 - profile 1
    5    2    4
0.0000    0.750
5.417     0.750
7.917     1.208
10.417    1.667
11.000    1.667
* code 1203 - profile 2
    7    2    3    4
0.000     1.667
0.583     1.667
5.583     0.750
7.917     0.750
10.2500   0.750
15.250    1.667
15.833    1.667
* code 1203 - profile 3
    7    2    3    4
0.000     1.667
0.583     1.667
5.583     0.750
10.458    0.750
15.333    0.750
20.333    1.667
20.917    1.667
* code 1203 - profile 4
    5    2    3    4
0.000     1.667
0.583     1.667
3.083     1.208
5.583     0.750
11.000    0.750
* code 1203 - profile 5
    7    2    3    4
0.000     1.458
0.583     1.458
1.583     0.458
7.917     0.458
14.2500   0.458
```

```
15.250    1.458
15.833    1.458
* code 1203 - profile 6
    5    2    3
0.000     1.167
0.833     1.167
3.771     1.167
6.708     1.167
7.938     1.167
* code 1204 - assembling boxgirder
    1    2    1
    2    4    2
    4    6    3
    6    8    2
    8   10    3
   10   12    2
   12   14    4
    3    5    5
    7    9    5
   11   13    5
    2    3    6
    4    5    6
    6    7    6
    8    9    6
   10   11    6
   12   13    6
* code 1205 control code
    1    2   13    1    1    0    4    5     1.0       1.0
* code 1206 wheels/axle
       0.0
       1.5
       6.0
       7.5 0.833
* code 1207 definition axles
0.00      18.00
10.00     18.00
14.00     18.00
24.00     18.00
28.00     18.00
* code 1208 - accuracy
0.00001   0.00001   0.00001   .00001    .00001
* code 1209 number sections
   50
   1A   1B   1R   2L   2A   2B   2C   2R   3L   3A   3B   3C   3R   4L
   4A   4B   4C   4R   5L   5A   5B   5C   5R   6L   6A   6B   6C   6R
   7L   7A   8A   8B  11L  11A  11B  12L  12A  12B  13L  13A  13B  14L
  14A  14B  15L  15A  15B  16L  16A  16B
* code 1210 - density conrete
0.156
* code 1211 - extra forces selfweight

* code 1212 - surcharge
2.7833
* code 1213 - Prestressing Layout - NONE
```

```
* start ; column 11-30 can be used to have your own text on the top of each page
*   5   10   15   20   25   30   35   40   45   50   55   60   65   70   75   80
*   V    V    V    V    V    V    V    V    V    V    V    V    V    V    V    V
00001  1 1     VEH: R2 - TOLL ROAD LOADING No. 2
* code 1001
Cline Avenue - Load Rating - Triple Box - 6 Webs - 111'-4" Wide
* code 1002
    2         1
* code 1003
*   5   10   15   20   25   30   35   40   45   50   55   60   65   70   75   80
*   V    V    V    V    V    V    V    V    V    V    V    V    V    V    V    V
250.0     168.0     111.33    1.0       1.0       1.3
* code 1004
    2    0    3
* code 1005
   90
* code 1005a
* location traffic lanes
7.667     19.667
* maximum and minimum truck
6.667     104.667   10.000
* code 1007, linear loads
0.7350    0.441
55.665    0.992
110.5983  0.441
* code 1201
   14    6    7    3    6
* code 1202 coordinates
0.0000    0.0
11.0000   0.0
11.0000   -7.938
26.8333   0.0
26.8333   -7.938
47.7500   0.0
47.7500   -7.938
63.5833   0.0
63.5833   -7.938
84.5000   0.0
84.5000   -7.938
100.3333  0.0
100.3333  -7.938
111.33    0.0
* code 1203 - profile 1
    5    2    4
0.0000    0.750
5.417     0.750
7.917     1.208
10.417    1.667
11.000    1.667
* code 1203 - profile 2
    7    2    3    4
0.000     1.667
0.583     1.667
5.583     0.750
7.917     0.750
10.2500   0.750
15.250    1.667
15.833    1.667
* code 1203 - profile 3
    7    2    3    4
0.000     1.667
0.583     1.667
5.583     0.750
10.458    0.750
15.333    0.750
20.333    1.667
20.917    1.667
* code 1203 - profile 4
    5    2    3    4
0.000     1.667
0.583     1.667
3.083     1.208
5.583     0.750
11.000    0.750
* code 1203 - profile 5
    7    2    3    4
0.000     1.458
0.583     1.458
1.583     0.458
7.917     0.458
14.2500   0.458
```

I_A_WB_R2_EL.txt 9/9/2009

```
15.250    1.458
15.833    1.458
* code 1203 - profile 6
    5    2    3
0.000     1.167
0.833     1.167
3.771     1.167
6.708     1.167
7.938     1.167
* code 1204 - assembling boxgirder
    1    2    1
    2    4    2
    4    6    3
    6    8    2
    8   10    3
   10   12    2
   12   14    4
    3    5    5
    7    9    5
   11   13    5
    2    3    6
    4    5    6
    6    7    6
    8    9    6
   10   11    6
   12   13    6
* code 1205 control code
    1    2   13    1    1    0    4    4     1.0       1.0
* code 1206 wheels/axle
       0.0
       1.5
       6.0
       7.5 0.833
* code 1207 definition axles
0.00      22.50
14.00     22.50
23.00     22.50
37.00     22.50
* code 1208 - accuracy
0.00001   0.00001   0.00001   .00001    .00001
* code 1209 number sections
   50
   1A   1B   1R   2L   2A   2B   2C   2R   3L   3A   3B   3C   3R   4L
   4A   4B   4C   4R   5L   5A   5B   5C   5R   6L   6A   6B   6C   6R
   7L   7A   8A   8B  11L  11A  11B  12L  12A  12B  13L  13A  13B  14L
  14A  14B  15L  15A  15B  16L  16A  16B
* code 1210 - density conrete
0.156
* code 1211 - extra forces selfweight

* code 1212 - surcharge
2.7833
* code 1213 - Prestressing Layout - NONE
```

I_A_WB_R3_EL.txt 9/9/2009

```
* start ; column 11-30 can be used to have your own text on the top of each page
*   5   10   15   20   25   30   35   40   45   50   55   60   65   70   75   80
*   V    V    V    V    V    V    V    V    V    V    V    V    V    V    V    V
00001  1 1     VEH: R3 - TOLL ROAD LOADING No. 3
* code 1001
Cline Avenue - Load Rating - Triple Box - 6 Webs - 111'-4" Wide
* code 1002
    2         1
* code 1003
*   5   10   15   20   25   30   35   40   45   50   55   60   65   70   75   80
*   V    V    V    V    V    V    V    V    V    V    V    V    V    V    V    V
250.0     168.0     111.33    1.0       1.0       1.3
* code 1004
    2    0    3
* code 1005
  126
* code 1005a
* location traffic lanes
7.667     19.667
* maximum and minimum truck
6.667     104.667   10.000
* code 1007, linear loads
0.7350    0.441
55.665    0.992
110.5983  0.441
* code 1201
   14    6    7    3    6
* code 1202 coordinates
0.0000    0.0
11.0000   0.0
11.0000   -7.938
26.8333   0.0
26.8333   -7.938
47.7500   0.0
47.7500   -7.938
63.5833   0.0
63.5833   -7.938
84.5000   0.0
84.5000   -7.938
100.3333  0.0
100.3333  -7.938
111.33    0.0
* code 1203 - profile 1
    5    2    4
0.0000    0.750
5.417     0.750
7.917     1.208
10.417    1.667
11.000    1.667
* code 1203 - profile 2
    7    2    3    4
0.000     1.667
0.583     1.667
5.583     0.750
7.917     0.750
10.2500   0.750
15.250    1.667
15.833    1.667
* code 1203 - profile 3
    7    2    3    4
0.000     1.667
0.583     1.667
5.583     0.750
10.458    0.750
15.333    0.750
20.333    1.667
20.917    1.667
* code 1203 - profile 4
    5    2    3    4
0.000     1.667
0.583     1.667
3.083     1.208
5.583     0.750
11.000    0.750
* code 1203 - profile 5
    7    2    3    4
0.000     1.458
0.583     1.458
1.583     0.458
7.917     0.458
14.2500   0.458
```

```
15.250    1.458
15.833    1.458
* code 1203 - profile 6
    5    2    3
0.000     1.167
0.833     1.167
3.771     1.167
6.708     1.167
7.938     1.167
* code 1204 - assembling boxgirder
    1    2    1
    2    4    2
    4    6    3
    6    8    2
    8   10    3
   10   12    2
   12   14    4
    3    5    5
    7    9    5
   11   13    5
    2    3    6
    4    5    6
    6    7    6
    8    9    6
   10   11    6
   12   13    6
* code 1205 control code
    1    2   13    1    1    0    4    7     1.0       1.0
* code 1206 wheels/axle
       0.0
       1.5
       6.0
       7.5 0.833
* code 1207 definition axles
0.00      18.00
10.00     18.00
14.00     18.00
40.00     18.00
44.00     18.00
56.00     18.00
76.00     18.00
* code 1208 - accuracy
      .001      .005      .004       .01       0.1
* code 1209 number sections
   50
   1A   1B   1R   2L   2A   2B   2C   2R   3L   3A   3B   3C   3R   4L
   4A   4B   4C   4R   5L   5A   5B   5C   5R   6L   6A   6B   6C   6R
   7L   7A   8A   8B  11L  11A  11B  12L  12A  12B  13L  13A  13B  14L
  14A  14B  15L  15A  15B  16L  16A  16B
* code 1210 - density conrete
0.156
* code 1211 - extra forces selfweight

* code 1212 - surcharge
2.7833
* code 1213 - Prestressing Layout - NONE
```

```
* start ; column 11-30 can be used to have your own text on the top of each page
*   5   10   15   20   25   30   35   40   45   50   55   60   65   70   75   80
*   V    V    V    V    V    V    V    V    V    V    V    V    V    V    V    V
00001  1 1     VEH: R4 - MICHIGAN TRUCK TRAIN No.5
* code 1001
Cline Avenue - Load Rating - Triple Box - 6 Webs - 111'-4" Wide
* code 1002
    2         1
* code 1003
*   5   10   15   20   25   30   35   40   45   50   55   60   65   70   75   80
*   V    V    V    V    V    V    V    V    V    V    V    V    V    V    V    V
250.0     168.0     111.33    1.0       1.0       1.3
* code 1004
    2    0    3
* code 1005
  134
* code 1005a
* location traffic lanes
7.667     19.667
* maximum and minimum truck
6.667     104.667   10.000
* code 1007, linear loads
0.7350    0.441
55.665    0.992
110.5983  0.441
* code 1201
   14    6    7    3    6
* code 1202 coordinates
0.0000    0.0
11.0000   0.0
11.0000   -7.938
26.8333   0.0
26.8333   -7.938
47.7500   0.0
47.7500   -7.938
63.5833   0.0
63.5833   -7.938
84.5000   0.0
84.5000   -7.938
100.3333  0.0
100.3333  -7.938
111.33    0.0
* code 1203 - profile 1
    5    2    4
0.0000    0.750
5.417     0.750
7.917     1.208
10.417    1.667
11.000    1.667
* code 1203 - profile 2
    7    2    3    4
0.000     1.667
0.583     1.667
5.583     0.750
7.917     0.750
10.2500   0.750
15.250    1.667
15.833    1.667
* code 1203 - profile 3
    7    2    3    4
0.000     1.667
0.583     1.667
5.583     0.750
10.458    0.750
15.333    0.750
20.333    1.667
20.917    1.667
* code 1203 - profile 4
    5    2    3    4
0.000     1.667
0.583     1.667
3.083     1.208
5.583     0.750
11.000    0.750
* code 1203 - profile 5
    7    2    3    4
0.000     1.458
0.583     1.458
1.583     0.458
7.917     0.458
14.2500   0.458
```

I_A_WB_R4_EL.txt 9/9/2009

```
15.250    1.458
15.833    1.458
* code 1203 - profile 6
    5    2    3
0.000     1.167
0.833     1.167
3.771     1.167
6.708     1.167
7.938     1.167
* code 1204 - assembling boxgirder
    1    2    1
    2    4    2
    4    6    3
    6    8    2
    8   10    3
   10   12    2
   12   14    4
    3    5    5
    7    9    5
   11   13    5
    2    3    6
    4    5    6
    6    7    6
    8    9    6
   10   11    6
   12   13    6
* code 1205 control code
    1    2   13    1    1    0    4    8     1.0       1.0
* code 1206 wheels/axle
       0.0
       1.5
       6.0
       7.5 0.833
* code 1207 definition axles
0.00      12.00
9.00      16.00
12.50     16.00
21.50     18.00
30.50     18.00
39.50     18.00
48.50     18.00
57.50     18.00
* code 1208 - accuracy
0.00001   0.00001   0.00001   .00001    .00001
* code 1209 number sections
   50
   1A   1B   1R   2L   2A   2B   2C   2R   3L   3A   3B   3C   3R   4L
   4A   4B   4C   4R   5L   5A   5B   5C   5R   6L   6A   6B   6C   6R
   7L   7A   8A   8B  11L  11A  11B  12L  12A  12B  13L  13A  13B  14L
  14A  14B  15L  15A  15B  16L  16A  16B
* code 1210 - density conrete
0.156
* code 1211 - extra forces selfweight

* code 1212 - surcharge
2.7833
* code 1213 - Prestressing Layout - NONE
```

```
* start ; column 11-30 can be used to have your own text on the top of each page
*   5   10   15   20   25   30   35   40   45   50   55   60   65   70   75   80
*   V    V    V    V    V    V    V    V    V    V    V    V    V    V    V    V
00001  1 1     VEH: R5 - MICHIGAN TRUCK TRAIN No. 8
* code 1001
Cline Avenue - Load Rating - Triple Box - 6 Webs - 111'-4" Wide
* code 1002
    2         1
* code 1003
*   5   10   15   20   25   30   35   40   45   50   55   60   65   70   75   80
*   V    V    V    V    V    V    V    V    V    V    V    V    V    V    V    V
250.0     168.0     111.33    1.0       1.0       1.3
* code 1004
    2    0    3
* code 1005
* Vehicle weight is 134.2 Kips, rounded to 135
  135
* code 1005a
* location traffic lanes
7.667     19.667
* maximum and minimum truck
6.667     104.667   10.000
* code 1007, linear loads
0.7350    0.441
55.665    0.992
110.5983  0.441
* code 1201
   14    6    7    3    6
* code 1202 coordinates
0.0000    0.0
11.0000   0.0
11.0000   -7.938
26.8333   0.0
26.8333   -7.938
47.7500   0.0
47.7500   -7.938
63.5833   0.0
63.5833   -7.938
84.5000   0.0
84.5000   -7.938
100.3333  0.0
100.3333  -7.938
111.33    0.0
* code 1203 - profile 1
    5    2    4
0.0000    0.750
5.417     0.750
7.917     1.208
10.417    1.667
11.000    1.667
* code 1203 - profile 2
    7    2    3    4
0.000     1.667
0.583     1.667
5.583     0.750
7.917     0.750
10.2500   0.750
15.250    1.667
15.833    1.667
* code 1203 - profile 3
    7    2    3    4
0.000     1.667
0.583     1.667
5.583     0.750
10.458    0.750
15.333    0.750
20.333    1.667
20.917    1.667
* code 1203 - profile 4
    5    2    3    4
0.000     1.667
0.583     1.667
3.083     1.208
5.583     0.750
11.000    0.750
* code 1203 - profile 5
    7    2    3    4
0.000     1.458
0.583     1.458
1.583     0.458
7.917     0.458
```

```
14.2500   0.458
15.250    1.458
15.833    1.458
* code 1203 - profile 6
    5    2    3
0.000     1.167
0.833     1.167
3.771     1.167
6.708     1.167
7.938     1.167
* code 1204 - assembling boxgirder
    1    2    1
    2    4    2
    4    6    3
    6    8    2
    8   10    3
   10   12    2
   12   14    4
    3    5    5
    7    9    5
   11   13    5
    2    3    6
    4    5    6
    6    7    6
    8    9    6
   10   11    6
   12   13    6
* code 1205 control code
    1    2   13    1    1    0    4   11     1.0       1.0
* code 1206 wheels/axle
       0.0
       1.5
       6.0
       7.5 0.833
* code 1207 definition axles
0.00      12.00
9.00      13.40
12.50     13.40
21.50     10.90
25.00     10.90
28.50     10.90
32.00     10.90
35.50     10.90
39.00     10.90
48.00     15.00
57.00     15.00
* code 1208 - accuracy
0.00001   0.00001   0.00001   .00001    .00001
* code 1209 number sections
   50
   1A   1B   1R   2L   2A   2B   2C   2R   3L   3A   3B   3C   3R   4L
   4A   4B   4C   4R   5L   5A   5B   5C   5R   6L   6A   6B   6C   6R
   7L   7A   8A   8B  11L  11A  11B  12L  12A  12B  13L  13A  13B  14L
  14A  14B  15L  15A  15B  16L  16A  16B
* code 1210 - density conrete
0.156
* code 1211 - extra forces selfweight

* code 1212 - surcharge
2.7833
* code 1213 - Prestressing Layout - NONE
```

```
* start ; column 11-30 can be used to have your own text on the top of each page
*   5   10   15   20   25   30   35   40   45   50   55   60   65   70   75   80
*   V    V    V    V    V    V    V    V    V    V    V    V    V    V    V    V
00001  1 1     VEH: S1 - SPECIAL TRUCK 11 AXLE
* code 1001
Cline Avenue - Load Rating-Triple Box-6 Webs-111'-4" Wide
* code 1002
    2         1
* code 1003
*   5   10   15   20   25   30   35   40   45   50   55   60   65   70   75   80
*   V    V    V    V    V    V    V    V    V    V    V    V    V    V    V    V
250.0     168.0     111.33    1.0       1.0       1.3
* code 1004
    2    0    3
* code 1005
  258
* code 1005a
* location traffic lanes
7.667     19.667
* maximum and minimum truck
6.667     104.667   10.000
* code 1007, linear loads
0.7350    0.441
55.665    0.992
110.5983  0.441
* code 1201
   14    6    7    3    6
* code 1202 coordinates
0.0000    0.0
11.0000   0.0
11.0000   -7.938
26.8333   0.0
26.8333   -7.938
47.7500   0.0
47.7500   -7.938
63.5833   0.0
63.5833   -7.938
84.5000   0.0
84.5000   -7.938
100.3333  0.0
100.3333  -7.938
111.33    0.0
* code 1203 - profile 1
    5    2    4
0.0000    0.750
5.417     0.750
7.917     1.208
10.417    1.667
11.000    1.667
* code 1203 - profile 2
    7    2    3    4
0.000     1.667
0.583     1.667
5.583     0.750
7.917     0.750
10.2500   0.750
15.250    1.667
15.833    1.667
* code 1203 - profile 3
    7    2    3    4
0.000     1.667
0.583     1.667
5.583     0.750
10.458    0.750
15.333    0.750
20.333    1.667
20.917    1.667
* code 1203 - profile 4
    5    2    3    4
0.000     1.667
0.583     1.667
3.083     1.208
5.583     0.750
11.000    0.750
* code 1203 - profile 5
    7    2    3    4
0.000     1.458
0.583     1.458
1.583     0.458
7.917     0.458
14.2500   0.458
```

```
15.250    1.458
15.833    1.458
* code 1203 - profile 6
    5    2    3
0.000     1.167
0.833     1.167
3.771     1.167
6.708     1.167
7.938     1.167
* code 1204 - assembling boxgirder
    1    2    1
    2    4    2
    4    6    3
    6    8    2
    8   10    3
   10   12    2
   12   14    4
    3    5    5
    7    9    5
   11   13    5
    2    3    6
    4    5    6
    6    7    6
    8    9    6
   10   11    6
   12   13    6
* code 1205 control code
    1    2   13    1    1    0    4   11     1.0       1.0
* code 1206 wheels/axle
       0.0
       1.5
       6.0
       7.5 0.833
* code 1207 definition axles
0.00      12.00
11.50     24.60
16.67     24.60
21.67     24.60
34.83     24.60
39.33     24.60
89.92     24.60
94.42     24.60
98.92     24.60
112.50     24.60
117.00     24.60
* code 1208 - accuracy
0.00001   0.00001   0.00001   .00001    .00001
* code 1209 number sections
   50
   1A   1B   1R   2L   2A   2B   2C   2R   3L   3A   3B   3C   3R   4L
   4A   4B   4C   4R   5L   5A   5B   5C   5R   6L   6A   6B   6C   6R
   7L   7A   8A   8B  11L  11A  11B  12L  12A  12B  13L  13A  13B  14L
  14A  14B  15L  15A  15B  16L  16A  16B
* code 1210 - density conrete
0.156
* code 1211 - extra forces selfweight

* code 1212 - surcharge
2.7833
* code 1213 - Prestressing Layout - NONE
```

I_A_WB_S2_EL.txt 9/9/2009

```
* start ; column 11-30 can be used to have your own text on the top of each page
*   5   10   15   20   25   30   35   40   45   50   55   60   65   70   75   80
*   V    V    V    V    V    V    V    V    V    V    V    V    V    V    V    V
00001  1 1     VEH: S2 - SPECIAL TRUCK - 13 AXLE
* code 1001
Cline Avenue - Load Rating - Triple Box - 6 Webs - 111'-4" Wide
* code 1002
    2         1
* code 1003
*   5   10   15   20   25   30   35   40   45   50   55   60   65   70   75   80
*   V    V    V    V    V    V    V    V    V    V    V    V    V    V    V    V
250.0     168.0     111.33    1.0       1.0       1.3
* code 1004
    2    0    3
* code 1005
  267
* code 1005a
* location traffic lanes
7.667     19.667
* maximum and minimum truck
6.667     104.667   10.000
* code 1007, linear loads
0.7350    0.441
55.665    0.992
110.5983  0.441
* code 1201
   14    6    7    3    6
* code 1202 coordinates
0.0000    0.0
11.0000   0.0
11.0000   -7.938
26.8333   0.0
26.8333   -7.938
47.7500   0.0
47.7500   -7.938
63.5833   0.0
63.5833   -7.938
84.5000   0.0
84.5000   -7.938
100.3333  0.0
100.3333  -7.938
111.33    0.0
* code 1203 - profile 1
    5    2    4
0.0000    0.750
5.417     0.750
7.917     1.208
10.417    1.667
11.000    1.667
* code 1203 - profile 2
    7    2    3    4
0.000     1.667
0.583     1.667
5.583     0.750
7.917     0.750
10.2500   0.750
15.250    1.667
15.833    1.667
* code 1203 - profile 3
    7    2    3    4
0.000     1.667
0.583     1.667
5.583     0.750
10.458    0.750
15.333    0.750
20.333    1.667
20.917    1.667
* code 1203 - profile 4
    5    2    3    4
0.000     1.667
0.583     1.667
3.083     1.208
5.583     0.750
11.000    0.750
* code 1203 - profile 5
    7    2    3    4
0.000     1.458
0.583     1.458
1.583     0.458
7.917     0.458
14.2500   0.458
```

```
15.250    1.458
15.833    1.458
* code 1203 - profile 6
    5    2    3
0.000     1.167
0.833     1.167
3.771     1.167
6.708     1.167
7.938     1.167
* code 1204 - assembling boxgirder
    1    2    1
    2    4    2
    4    6    3
    6    8    2
    8   10    3
   10   12    2
   12   14    4
    3    5    5
    7    9    5
   11   13    5
    2    3    6
    4    5    6
    6    7    6
    8    9    6
   10   11    6
   12   13    6
* code 1205 control code
    1    2   13    1    1    0    4   13     1.0       1.0
* code 1206 wheels/axle
       0.0
       1.5
       6.0
       7.5 0.833
* code 1207 definition axles
0.00      15.00
16.50     21.00
21.00     21.00
25.50     21.00
39.50     21.00
44.00     21.00
48.50     21.00
96.50     21.00
101.00    21.00
105.50    21.00
121.00    21.00
125.50    21.00
130.00    21.00
* code 1208 - accuracy
0.00001   0.00001   0.00001   .00001    .00001
* code 1209 number sections
   50
   1A   1B   1R   2L   2A   2B   2C   2R   3L   3A   3B   3C   3R   4L
   4A   4B   4C   4R   5L   5A   5B   5C   5R   6L   6A   6B   6C   6R
   7L   7A   8A   8B  11L  11A  11B  12L  12A  12B  13L  13A  13B  14L
  14A  14B  15L  15A  15B  16L  16A  16B
* code 1210 - density conrete
0.156
* code 1211 - extra forces selfweight

* code 1212 - surcharge
2.7833
* code 1213 - Prestressing Layout - NONE
```

```
* start ; column 11-30 can be used to have your own text on the top of each page
*   5   10   15   20   25   30   35   40   45   50   55   60   65   70   75   80
*   V    V    V    V    V    V    V    V    V    V    V    V    V    V    V    V
00001  1 1     VEH: S3 - SPECIAL TRUCK - 14 AXLE
* code 1001
Cline Avenue - Load Rating - Triple Box - 6 Webs - 111'-4" Wide
* code 1002
    2         1
* code 1003
*   5   10   15   20   25   30   35   40   45   50   55   60   65   70   75   80
*   V    V    V    V    V    V    V    V    V    V    V    V    V    V    V    V
250.0     168.0     111.33    1.0       1.0       1.3
* code 1004
    2    0    3
* code 1005
  350
* code 1005a
* location traffic lanes
7.667     19.667
* maximum and minimum truck
6.667     104.667   10.000
* code 1007, linear loads
0.7350    0.441
55.665    0.992
110.5983  0.441
* code 1201
   14    6    7    3    6
* code 1202 coordinates
0.0000    0.0
11.0000   0.0
11.0000   -7.938
26.8333   0.0
26.8333   -7.938
47.7500   0.0
47.7500   -7.938
63.5833   0.0
63.5833   -7.938
84.5000   0.0
84.5000   -7.938
100.3333  0.0
100.3333  -7.938
111.33    0.0
* code 1203 - profile 1
    5    2    4
0.0000    0.750
5.417     0.750
7.917     1.208
10.417    1.667
11.000    1.667
* code 1203 - profile 2
    7    2    3    4
0.000     1.667
0.583     1.667
5.583     0.750
7.917     0.750
10.2500   0.750
15.250    1.667
15.833    1.667
* code 1203 - profile 3
    7    2    3    4
0.000     1.667
0.583     1.667
5.583     0.750
10.458    0.750
15.333    0.750
20.333    1.667
20.917    1.667
* code 1203 - profile 4
    5    2    3    4
0.000     1.667
0.583     1.667
3.083     1.208
5.583     0.750
11.000    0.750
* code 1203 - profile 5
    7    2    3    4
0.000     1.458
0.583     1.458
1.583     0.458
7.917     0.458
14.2500   0.458
```

```
15.250    1.458
15.833    1.458
* code 1203 - profile 6
    5    2    3
0.000     1.167
0.833     1.167
3.771     1.167
6.708     1.167
7.938     1.167
* code 1204 - assembling boxgirder
    1    2    1
    2    4    2
    4    6    3
    6    8    2
    8   10    3
   10   12    2
   12   14    4
    3    5    5
    7    9    5
   11   13    5
    2    3    6
    4    5    6
    6    7    6
    8    9    6
   10   11    6
   12   13    6
* code 1205 control code
    1    2   13    1    1    0    4   14     1.0       1.0
* code 1206 wheels/axle
       0.0
       1.5
       6.0
       7.5 0.833
* code 1207 definition axles
0.00      13.00
14.50     25.00
19.00     25.00
23.50     25.00
50.50     23.50
54.67     23.50
58.83     23.50
102.83    23.50
107.33    28.00
111.83    28.00
116.33    28.00
132.17    28.00
136.67    28.00
141.17    28.00
* code 1208 - accuracy
0.00001   0.00001   0.00001   .00001    .00001
* code 1209 number sections
   50
   1A   1B   1R   2L   2A   2B   2C   2R   3L   3A   3B   3C   3R   4L
   4A   4B   4C   4R   5L   5A   5B   5C   5R   6L   6A   6B   6C   6R
   7L   7A   8A   8B  11L  11A  11B  12L  12A  12B  13L  13A  13B  14L
  14A  14B  15L  15A  15B  16L  16A  16B
* code 1210 - density conrete
0.156
* code 1211 - extra forces selfweight

* code 1212 - surcharge
2.7833
* code 1213 - Prestressing Layout - NONE
```

```
* start ; column 11-30 can be used to have your own text on the top of each page
*   5   10   15   20   25   30   35   40   45   50   55   60   65   70   75   80
*   V    V    V    V    V    V    V    V    V    V    V    V    V    V    V    V
00001  1 1     VEH: S4 - SUPER LOAD -19 AXLES
* code 1001
Cline Avenue - Load Rating - Triple Box - 6 Webs - 111'-4" Wide
* code 1002
    2         1
* code 1003
*   5   10   15   20   25   30   35   40   45   50   55   60   65   70   75   80
*   V    V    V    V    V    V    V    V    V    V    V    V    V    V    V    V
250.0     168.0     111.33    1.0       1.0       1.3
* code 1004
    2    0    3
* code 1005
  305
* code 1005a
* location traffic lanes
7.667     19.667
* maximum and minimum truck
6.667     104.667   10.000
* code 1007, linear loads
0.7350    0.441
55.665    0.992
110.5983  0.441
* code 1201
   14    6    7    3    6
* code 1202 coordinates
0.0000    0.0
11.0000   0.0
11.0000   -7.938
26.8333   0.0
26.8333   -7.938
47.7500   0.0
47.7500   -7.938
63.5833   0.0
63.5833   -7.938
84.5000   0.0
84.5000   -7.938
100.3333  0.0
100.3333  -7.938
111.33    0.0
* code 1203 - profile 1
    5    2    4
0.0000    0.750
5.417     0.750
7.917     1.208
10.417    1.667
11.000    1.667
* code 1203 - profile 2
    7    2    3    4
0.000     1.667
0.583     1.667
5.583     0.750
7.917     0.750
10.2500   0.750
15.250    1.667
15.833    1.667
* code 1203 - profile 3
    7    2    3    4
0.000     1.667
0.583     1.667
5.583     0.750
10.458    0.750
15.333    0.750
20.333    1.667
20.917    1.667
* code 1203 - profile 4
    5    2    3    4
0.000     1.667
0.583     1.667
3.083     1.208
5.583     0.750
11.000    0.750
* code 1203 - profile 5
    7    2    3    4
0.000     1.458
0.583     1.458
1.583     0.458
7.917     0.458
14.2500   0.458
```

```
15.250    1.458
15.833    1.458
* code 1203 - profile 6
    5    2    3
0.000     1.167
0.833     1.167
3.771     1.167
6.708     1.167
7.938     1.167
* code 1204 - assembling boxgirder
    1    2    1
    2    4    2
    4    6    3
    6    8    2
    8   10    3
   10   12    2
   12   14    4
    3    5    5
    7    9    5
   11   13    5
    2    3    6
    4    5    6
    6    7    6
    8    9    6
   10   11    6
   12   13    6
* code 1205 control code
    1    2   13    1    1    0    4   19     1.0       1.0
* code 1206 wheels/axle
       0.0
       1.5
       6.0
       7.5 0.833
* code 1207 definition axles
0.00      13.00
13.50     16.48
17.83     16.48
31.33     16.48
35.42     15.99
39.50     15.99
45.50     15.99
49.58     16.37
53.67     16.37
103.58    16.37
107.67    16.64
114.17    16.64
118.25    15.15
122.33    15.15
126.42    15.15
135.92    15.15
140.00    17.20
144.08    17.20
148.17    17.20
* code 1208 - accuracy
0.00001   0.00001   0.00001   .00001    .00001
* code 1209 number sections
   50
   1A   1B   1R   2L   2A   2B   2C   2R   3L   3A   3B   3C   3R   4L
   4A   4B   4C   4R   5L   5A   5B   5C   5R   6L   6A   6B   6C   6R
   7L   7A   8A   8B  11L  11A  11B  12L  12A  12B  13L  13A  13B  14L
  14A  14B  15L  15A  15B  16L  16A  16B
* code 1210 - density conrete
0.156
* code 1211 - extra forces selfweight

* code 1212 - surcharge
2.7833
* code 1213 - Prestressing Layout - NONE
```

```
* start ; column 11-30 can be used to have your own text on the top of each page
*   5   10   15   20   25   30   35   40   45   50   55   60   65   70   75   80
*   V    V    V    V    V    V    V    V    V    V    V    V    V    V    V    V
00001  1 1     VEH: S5 - SUPERLOAD - 19 AXLE
* code 1001
Cline Avenue - Load Rating - Triple Box - 6 Webs - 111'-4" Wide
* code 1002
    2         1
* code 1003
*   5   10   15   20   25   30   35   40   45   50   55   60   65   70   75   80
*   V    V    V    V    V    V    V    V    V    V    V    V    V    V    V    V
250.0     168.0     111.33    1.0       1.0       1.3
* code 1004
    2    0    3
* code 1005
  480
* code 1005a
* location traffic lanes
7.667     19.667
* maximum and minimum truck
6.667     104.667   10.000
* code 1007, linear loads
0.7350    0.441
55.665    0.992
110.5983  0.441
* code 1201
   14    6    7    3    6
* code 1202 coordinates
0.0000    0.0
11.0000   0.0
11.0000   -7.938
26.8333   0.0
26.8333   -7.938
47.7500   0.0
47.7500   -7.938
63.5833   0.0
63.5833   -7.938
84.5000   0.0
84.5000   -7.938
100.3333  0.0
100.3333  -7.938
111.33    0.0
* code 1203 - profile 1
    5    2    4
0.0000    0.750
5.417     0.750
7.917     1.208
10.417    1.667
11.000    1.667
* code 1203 - profile 2
    7    2    3    4
0.000     1.667
0.583     1.667
5.583     0.750
7.917     0.750
10.2500   0.750
15.250    1.667
15.833    1.667
* code 1203 - profile 3
    7    2    3    4
0.000     1.667
0.583     1.667
5.583     0.750
10.458    0.750
15.333    0.750
20.333    1.667
20.917    1.667
* code 1203 - profile 4
    5    2    3    4
0.000     1.667
0.583     1.667
3.083     1.208
5.583     0.750
11.000    0.750
* code 1203 - profile 5
    7    2    3    4
0.000     1.458
0.583     1.458
1.583     0.458
7.917     0.458
14.2500   0.458
```

```
15.250    1.458
15.833    1.458
* code 1203 - profile 6
    5    2    3
0.000     1.167
0.833     1.167
3.771     1.167
6.708     1.167
7.938     1.167
* code 1204 - assembling boxgirder
    1    2    1
    2    4    2
    4    6    3
    6    8    2
    8   10    3
   10   12    2
   12   14    4
    3    5    5
    7    9    5
   11   13    5
    2    3    6
    4    5    6
    6    7    6
    8    9    6
   10   11    6
   12   13    6
* code 1205 control code
    1    2   13    1    1    0    4   19     1.0       1.0
* code 1206 wheels/axle
       0.0
       1.5
       6.0
       7.5 0.833
* code 1207 definition axles
0.00      12.88
12.50     25.95
17.50     25.95
31.58     25.95
36.58     25.95
41.58     25.95
55.67     25.95
60.67     25.95
65.67     25.95
115.67    25.95
120.67    25.95
125.67    25.95
139.75    25.95
144.75    25.95
149.75    25.95
163.83    25.95
168.83    25.95
173.83    25.95
178.83    25.95
* code 1208 - accuracy
0.00001   0.00001   0.00001   .00001    .00001
* code 1209 number sections
   50
   1A   1B   1R   2L   2A   2B   2C   2R   3L   3A   3B   3C   3R   4L
   4A   4B   4C   4R   5L   5A   5B   5C   5R   6L   6A   6B   6C   6R
   7L   7A   8A   8B  11L  11A  11B  12L  12A  12B  13L  13A  13B  14L
  14A  14B  15L  15A  15B  16L  16A  16B
* code 1210 - density conrete
0.156
* code 1211 - extra forces selfweight

* code 1212 - surcharge
2.7833
* code 1213 - Prestressing Layout - NONE
```

4.3.3 Brug Output AASHTO Lanes (Summary)

VEH: HL93- TRUCK - S BRUG(5.75.44) page 61
date 10/09/2009; time 10:51:49
Cline Avenue - Load Rating - Triple Box - 6 Webs - 111'-4" W

Summary of the results (Maximum)

Section	--- Deadload ---- Moment	Ax.Frc	----- P.T. ------ Moment	Ax.Frc	--- Live load --- Moment	Ax.Frc
1 a	-3.85	0.45	0.00	0.00	1.55	0.08
1 b	-12.27	1.82	0.00	0.00	0.00	0.00
1 right	-13.64	2.07	0.00	0.00	0.00	0.00
2 left	-6.34	2.82	0.00	0.00	0.01	0.00
2 a	-5.43	2.62	0.00	0.00	0.25	1.47
2 b	-0.74	1.59	0.00	0.00	3.84	-0.05
2 c	-0.18	1.48	0.00	0.00	4.21	-0.47
2 right	-5.10	2.61	0.00	0.00	0.38	1.39
3 left	-8.76	2.37	0.00	0.00	3.60	0.23
3 a	-7.59	2.13	0.00	0.00	3.64	0.85
3 b	-0.70	0.83	0.00	0.00	4.84	0.07
3 c	1.77	0.52	0.00	0.00	5.23	-0.04
3 right	-5.39	2.55	0.00	0.00	1.84	1.47
4 left	-6.99	2.15	0.00	0.00	0.27	-0.21
4 a	-5.84	1.96	0.00	0.00	1.52	1.25
4 b	0.91	1.00	0.00	0.00	4.14	0.18
4 c	2.45	0.92	0.00	0.00	4.29	-0.12
4 right	-6.99	2.15	0.00	0.00	0.27	-0.21
5 left	-5.39	2.56	0.00	0.00	1.84	1.47
5 a	-4.41	2.31	0.00	0.00	2.57	1.18
5 b	0.88	0.93	0.00	0.00	4.32	0.33
5 c	1.77	0.52	0.00	0.00	5.23	-0.04
5 right	-8.76	2.37	0.00	0.00	3.60	0.23
6 left	-5.10	2.61	0.00	0.00	0.38	1.39
6 a	-4.28	2.43	0.00	0.00	1.72	0.87
6 b	-0.39	1.53	0.00	0.00	4.14	-0.16
6 c	-0.18	1.48	0.00	0.00	4.21	-0.47
6 right	-6.34	2.82	0.00	0.00	0.01	0.00
7 left	-13.64	2.07	0.00	0.00	0.00	0.00
7 a	-12.27	1.82	0.00	0.00	0.00	0.00
8 a	-0.92	-0.47	0.00	0.00	0.88	-1.16
8 b	-0.42	-0.09	0.00	0.00	0.72	-0.92
11 top	-7.30	-4.04	0.00	0.00	4.74	-1.92
11 a	-6.67	-3.50	0.00	0.00	4.06	-1.67
11 b	-4.45	-1.51	0.00	0.00	2.16	-0.83
12 top	3.66	-3.54	0.00	0.00	5.67	-3.31
12 a	3.46	-3.04	0.00	0.00	4.72	-2.85
12 b	2.73	-1.21	0.00	0.00	2.28	-1.37
13 top	1.60	-3.78	0.00	0.00	6.60	-1.67
13 a	1.26	-3.27	0.00	0.00	5.70	-1.44
13 b	0.08	-1.36	0.00	0.00	3.04	-0.68
14 top	-1.60	-3.78	0.00	0.00	6.55	-3.46
14 a	-1.26	-3.27	0.00	0.00	5.49	-2.98
14 b	-0.08	-1.36	0.00	0.00	2.67	-0.83
15 top	-3.66	-3.54	0.00	0.00	7.56	-1.51
15 a	-3.46	-3.04	0.00	0.00	6.54	-1.30
15 b	-2.73	-1.21	0.00	0.00	3.46	-0.58
16 top	7.30	-4.04	0.00	0.00	10.22	-6.98
16 a	6.67	-3.50	0.00	0.00	8.56	-5.90
16 b	4.45	-1.51	0.00	0.00	4.18	-2.69

VEH: HL93- TRUCK - S BRUG(5.75.44) page 62
date 10/09/2009; time 10:51:49
Cline Avenue - Load Rating - Triple Box - 6 Webs - 111'-4" W

Summary of the results (Minimum)

Section	--- Deadload ---- Moment	Ax.Frc	----- P.T. ------ Moment	Ax.Frc	--- Live load --- Moment	Ax.Frc
1 a	-3.85	0.45	0.00	0.00	-1.02	0.06
1 b	-12.27	1.82	0.00	0.00	-10.03	0.56
1 right	-13.64	2.07	0.00	0.00	-13.08	0.81
2 left	-6.34	2.82	0.00	0.00	-6.29	-0.13
2 a	-5.43	2.62	0.00	0.00	-5.55	-0.20
2 b	-0.74	1.59	0.00	0.00	-0.58	0.79
2 c	-0.18	1.48	0.00	0.00	-0.45	0.47
2 right	-5.10	2.61	0.00	0.00	-5.64	-0.48
3 left	-8.76	2.37	0.00	0.00	-7.81	0.30
3 a	-7.59	2.13	0.00	0.00	-6.47	0.27
3 b	-0.70	0.83	0.00	0.00	-2.27	-0.02
3 c	1.77	0.52	0.00	0.00	-0.19	-0.09
3 right	-5.39	2.55	0.00	0.00	-8.92	0.35
4 left	-6.99	2.15	0.00	0.00	-5.86	0.04
4 a	-5.84	1.96	0.00	0.00	-5.17	-0.02
4 b	0.91	1.00	0.00	0.00	-0.61	-0.09
4 c	2.45	0.92	0.00	0.00	-0.38	0.22
4 right	-6.99	2.15	0.00	0.00	-5.86	0.04
5 left	-5.39	2.56	0.00	0.00	-8.92	0.35
5 a	-4.41	2.31	0.00	0.00	-7.52	0.36
5 b	0.88	0.93	0.00	0.00	-2.81	-0.15
5 c	1.77	0.52	0.00	0.00	-0.19	-0.09
5 right	-8.76	2.37	0.00	0.00	-7.81	0.30
6 left	-5.10	2.61	0.00	0.00	-5.64	-0.48
6 a	-4.28	2.43	0.00	0.00	-4.75	-0.58
6 b	-0.39	1.53	0.00	0.00	-0.63	-0.50
6 c	-0.18	1.48	0.00	0.00	-0.45	0.47
6 right	-6.34	2.82	0.00	0.00	-6.29	-0.13
7 left	-13.64	2.07	0.00	0.00	-13.09	0.81
7 a	-12.27	1.82	0.00	0.00	-10.04	0.56
8 a	-0.92	-0.47	0.00	0.00	-0.35	0.28
8 b	-0.42	-0.09	0.00	0.00	-0.30	0.29
11 top	-7.30	-4.04	0.00	0.00	-10.22	-6.98
11 a	-6.67	-3.50	0.00	0.00	-8.56	-5.90
11 b	-4.45	-1.51	0.00	0.00	-4.18	-2.69
12 top	3.66	-3.54	0.00	0.00	-7.56	-1.51
12 a	3.46	-3.04	0.00	0.00	-6.54	-1.30
12 b	2.73	-1.21	0.00	0.00	-3.46	-0.58
13 top	1.60	-3.78	0.00	0.00	-6.55	-3.46
13 a	1.26	-3.27	0.00	0.00	-5.49	-2.98
13 b	0.08	-1.36	0.00	0.00	-2.67	-0.83
14 top	-1.60	-3.78	0.00	0.00	-6.60	-1.67
14 a	-1.26	-3.27	0.00	0.00	-5.70	-1.45
14 b	-0.08	-1.36	0.00	0.00	-3.04	-0.68
15 top	-3.66	-3.54	0.00	0.00	-5.67	-3.31
15 a	-3.46	-3.04	0.00	0.00	-4.72	-2.85
15 b	-2.73	-1.21	0.00	0.00	-2.28	-1.37
16 top	7.30	-4.04	0.00	0.00	-4.74	-1.92
16 a	6.67	-3.50	0.00	0.00	-4.06	-1.67
16 b	4.45	-1.51	0.00	0.00	-2.16	-0.83

VEH: HL93- TANDEM - BRUG(5.75.44) page 61
date 10/09/2009; time 10:51:49
Cline Avenue - Load Rating - Triple Box - 6 Webs - 111'-4" W

Summary of the results (Maximum)

Section	--- Deadload ---- Moment	Ax.Frc	----- P.T. ------ Moment	Ax.Frc	--- Live load --- Moment	Ax.Frc
1 a	-3.85	0.45	0.00	0.00	1.14	0.09
1 b	-12.27	1.82	0.00	0.00	0.00	0.00
1 right	-13.64	2.07	0.00	0.00	0.00	0.00
2 left	-6.34	2.82	0.00	0.00	0.01	0.00
2 a	-5.43	2.62	0.00	0.00	0.00	0.00
2 b	-0.74	1.59	0.00	0.00	3.35	-0.04
2 c	-0.18	1.48	0.00	0.00	3.75	-0.43
2 right	-5.10	2.61	0.00	0.00	0.16	-0.26
3 left	-8.76	2.37	0.00	0.00	2.61	0.13
3 a	-7.59	2.13	0.00	0.00	2.43	0.12
3 b	-0.70	0.83	0.00	0.00	3.89	0.05
3 c	1.77	0.52	0.00	0.00	4.81	-0.14
3 right	-5.39	2.55	0.00	0.00	0.71	-0.07
4 left	-6.99	2.15	0.00	0.00	0.19	-0.15
4 a	-5.84	1.96	0.00	0.00	0.16	-0.14
4 b	0.91	1.00	0.00	0.00	3.58	0.14
4 c	2.45	0.92	0.00	0.00	3.81	-0.16
4 right	-6.99	2.15	0.00	0.00	0.19	-0.15
5 left	-5.39	2.56	0.00	0.00	0.71	-0.07
5 a	-4.41	2.31	0.00	0.00	0.98	1.17
5 b	0.88	0.93	0.00	0.00	3.54	0.23
5 c	1.77	0.52	0.00	0.00	4.81	-0.13
5 right	-8.76	2.37	0.00	0.00	2.61	0.13
6 left	-5.10	2.61	0.00	0.00	0.16	-0.26
6 a	-4.28	2.43	0.00	0.00	0.14	1.02
6 b	-0.39	1.53	0.00	0.00	3.57	-0.10
6 c	-0.18	1.48	0.00	0.00	3.75	-0.43
6 right	-6.34	2.82	0.00	0.00	0.01	0.00
7 left	-13.64	2.07	0.00	0.00	0.00	0.00
7 a	-12.27	1.82	0.00	0.00	0.00	0.00
8 a	-0.92	-0.47	0.00	0.00	0.75	-1.09
8 b	-0.42	-0.09	0.00	0.00	0.57	-0.82
11 top	-7.30	-4.04	0.00	0.00	4.65	-2.13
11 a	-6.67	-3.50	0.00	0.00	3.93	-1.88
11 b	-4.45	-1.51	0.00	0.00	1.98	-0.98
12 top	3.66	-3.54	0.00	0.00	6.16	-3.26
12 a	3.46	-3.04	0.00	0.00	5.13	-2.89
12 b	2.73	-1.21	0.00	0.00	2.37	-1.71
13 top	1.60	-3.78	0.00	0.00	6.13	-2.35
13 a	1.26	-3.27	0.00	0.00	5.04	-1.75
13 b	0.08	-1.36	0.00	0.00	2.57	-0.89
14 top	-1.60	-3.78	0.00	0.00	6.75	-3.36
14 a	-1.26	-3.27	0.00	0.00	5.65	-2.98
14 b	-0.08	-1.36	0.00	0.00	2.63	-1.77
15 top	-3.66	-3.54	0.00	0.00	6.78	-2.25
15 a	-3.46	-3.04	0.00	0.00	5.61	-1.65
15 b	-2.73	-1.21	0.00	0.00	2.85	-0.82
16 top	7.30	-4.04	0.00	0.00	9.65	-6.36
16 a	6.67	-3.50	0.00	0.00	8.11	-5.60
16 b	4.45	-1.51	0.00	0.00	3.84	-2.91

VEH: HL93- TANDEM - BRUG(5.75.44) page 62
date 10/09/2009; time 10:51:49
Cline Avenue - Load Rating - Triple Box - 6 Webs - 111'-4" W

Summary of the results (Minimum)

Section	--- Deadload ---- Moment	Ax.Frc	----- P.T. ------ Moment	Ax.Frc	--- Live load --- Moment	Ax.Frc
1 a	-3.85	0.45	0.00	0.00	-1.56	0.06
1 b	-12.27	1.82	0.00	0.00	-11.15	0.65
1 right	-13.64	2.07	0.00	0.00	-13.67	0.84
2 left	-6.34	2.82	0.00	0.00	-7.02	0.06
2 a	-5.43	2.62	0.00	0.00	-6.19	-0.14
2 b	-0.74	1.59	0.00	0.00	-0.78	0.74
2 c	-0.18	1.48	0.00	0.00	-0.45	0.44
2 right	-5.10	2.61	0.00	0.00	-6.57	-0.15
3 left	-8.76	2.37	0.00	0.00	-9.39	0.32
3 a	-7.59	2.13	0.00	0.00	-8.45	0.22
3 b	-0.70	0.83	0.00	0.00	-2.41	-0.10
3 c	1.77	0.52	0.00	0.00	-0.16	-0.07
3 right	-5.39	2.55	0.00	0.00	-10.15	0.35
4 left	-6.99	2.15	0.00	0.00	-6.71	0.23
4 a	-5.84	1.96	0.00	0.00	-5.93	0.02
4 b	0.91	1.00	0.00	0.00	-0.59	-0.07
4 c	2.45	0.92	0.00	0.00	-0.34	0.18
4 right	-6.99	2.15	0.00	0.00	-6.71	0.23
5 left	-5.39	2.56	0.00	0.00	-10.15	0.35
5 a	-4.41	2.31	0.00	0.00	-9.16	0.25
5 b	0.88	0.93	0.00	0.00	-2.78	-0.19
5 c	1.77	0.52	0.00	0.00	-0.16	-0.07
5 right	-8.76	2.37	0.00	0.00	-9.39	0.32
6 left	-5.10	2.61	0.00	0.00	-6.57	-0.15
6 a	-4.28	2.43	0.00	0.00	-5.80	-0.35
6 b	-0.39	1.53	0.00	0.00	-0.60	-0.34
6 c	-0.18	1.48	0.00	0.00	-0.45	0.44
6 right	-6.34	2.82	0.00	0.00	-7.02	0.06
7 left	-13.64	2.07	0.00	0.00	-13.67	0.84
7 a	-12.27	1.82	0.00	0.00	-11.15	0.65
8 a	-0.92	-0.47	0.00	0.00	-0.28	0.20
8 b	-0.42	-0.09	0.00	0.00	-0.24	0.22
11 top	-7.30	-4.04	0.00	0.00	-9.65	-6.36
11 a	-6.67	-3.50	0.00	0.00	-8.11	-5.60
11 b	-4.45	-1.51	0.00	0.00	-3.84	-2.91
12 top	3.66	-3.54	0.00	0.00	-6.78	-2.25
12 a	3.46	-3.04	0.00	0.00	-5.61	-1.65
12 b	2.73	-1.21	0.00	0.00	-2.85	-0.82
13 top	1.60	-3.78	0.00	0.00	-6.75	-3.36
13 a	1.26	-3.27	0.00	0.00	-5.65	-2.98
13 b	0.08	-1.36	0.00	0.00	-2.63	-1.77
14 top	-1.60	-3.78	0.00	0.00	-6.13	-2.35
14 a	-1.26	-3.27	0.00	0.00	-5.04	-1.75
14 b	-0.08	-1.36	0.00	0.00	-2.57	-0.89
15 top	-3.66	-3.54	0.00	0.00	-6.16	-3.26
15 a	-3.46	-3.04	0.00	0.00	-5.13	-2.89
15 b	-2.73	-1.21	0.00	0.00	-2.37	-1.71
16 top	7.30	-4.04	0.00	0.00	-4.65	-2.13
16 a	6.67	-3.50	0.00	0.00	-3.93	-1.88
16 b	4.45	-1.51	0.00	0.00	-1.98	-0.98

VEH: R1 - TOLL ROAD BRUG(5.75.44) page 61
date 10/09/2009; time 10:51:50
Cline Avenue - Load Rating - Triple Box - 6 Webs - 111'-4" W

Summary of the results (Maximum)

Section	--- Deadload ----		----- P.T. ------		--- Live load ---	
	Moment	Ax.Frc	Moment	Ax.Frc	Moment	Ax.Frc
1 a	-3.85	0.45	0.00	0.00	0.61	0.12
1 b	-12.27	1.82	0.00	0.00	0.00	0.00
1 right	-13.64	2.07	0.00	0.00	0.00	0.01
2 left	-6.34	2.82	0.00	0.00	0.02	0.00
2 a	-5.43	2.62	0.00	0.00	0.25	1.55
2 b	-0.74	1.59	0.00	0.00	3.30	-0.04
2 c	-0.18	1.48	0.00	0.00	3.62	-0.55
2 right	-5.10	2.61	0.00	0.00	1.17	1.21
3 left	-8.76	2.37	0.00	0.00	4.40	0.29
3 a	-7.59	2.13	0.00	0.00	4.45	0.79
3 b	-0.70	0.83	0.00	0.00	4.61	0.12
3 c	1.77	0.52	0.00	0.00	4.40	-0.04
3 right	-5.39	2.55	0.00	0.00	2.85	1.33
4 left	-6.99	2.15	0.00	0.00	0.89	1.63
4 a	-5.84	1.96	0.00	0.00	1.65	1.30
4 b	0.91	1.00	0.00	0.00	3.67	0.26
4 c	2.45	0.92	0.00	0.00	3.73	-0.11
4 right	-6.99	2.15	0.00	0.00	0.90	1.63
5 left	-5.39	2.56	0.00	0.00	2.85	1.33
5 a	-4.41	2.31	0.00	0.00	3.14	1.19
5 b	0.88	0.93	0.00	0.00	3.98	0.43
5 c	1.77	0.52	0.00	0.00	4.40	-0.04
5 right	-8.76	2.37	0.00	0.00	4.40	0.29
6 left	-5.10	2.61	0.00	0.00	1.17	1.21
6 a	-4.28	2.43	0.00	0.00	1.89	0.84
6 b	-0.39	1.53	0.00	0.00	3.66	-0.15
6 c	-0.18	1.48	0.00	0.00	3.62	-0.55
6 right	-6.34	2.82	0.00	0.00	0.02	0.00
7 left	-13.64	2.07	0.00	0.00	0.00	0.01
7 a	-12.27	1.82	0.00	0.00	0.00	0.00
8 a	-0.92	-0.47	0.00	0.00	1.05	-1.39
8 b	-0.42	-0.09	0.00	0.00	0.88	-1.13
11 top	-7.30	-4.04	0.00	0.00	5.39	-1.62
11 a	-6.67	-3.50	0.00	0.00	4.73	-1.43
11 b	-4.45	-1.51	0.00	0.00	2.62	-0.75
12 top	3.66	-3.54	0.00	0.00	6.20	-2.50
12 a	3.46	-3.04	0.00	0.00	5.35	-2.19
12 b	2.73	-1.21	0.00	0.00	2.77	-0.74
13 top	1.60	-3.78	0.00	0.00	7.65	-1.32
13 a	1.26	-3.27	0.00	0.00	6.72	-1.15
13 b	0.08	-1.36	0.00	0.00	3.70	-0.57
14 top	-1.60	-3.78	0.00	0.00	7.27	-2.68
14 a	-1.26	-3.27	0.00	0.00	6.29	-2.36
14 b	-0.08	-1.36	0.00	0.00	3.26	-0.84
15 top	-3.66	-3.54	0.00	0.00	8.82	-1.12
15 a	-3.46	-3.04	0.00	0.00	7.74	-0.97
15 b	-2.73	-1.21	0.00	0.00	4.20	-0.45
16 top	7.30	-4.04	0.00	0.00	11.42	-4.73
16 a	6.67	-3.50	0.00	0.00	9.88	-4.13
16 b	4.45	-1.51	0.00	0.00	5.07	-2.15

VEH: R1 - TOLL ROAD BRUG(5.75.44) page 62
date 10/09/2009; time 10:51:50
Cline Avenue - Load Rating - Triple Box - 6 Webs - 111'-4" W

Summary of the results (Minimum)

Section	--- Deadload ----		----- P.T. ------		--- Live load ---	
	Moment	Ax.Frc	Moment	Ax.Frc	Moment	Ax.Frc
1 a	-3.85	0.45	0.00	0.00	-2.12	0.12
1 b	-12.27	1.82	0.00	0.00	-11.30	0.61
1 right	-13.64	2.07	0.00	0.00	-13.54	0.75
2 left	-6.34	2.82	0.00	0.00	-6.15	-0.25
2 a	-5.43	2.62	0.00	0.00	-5.43	-0.30
2 b	-0.74	1.59	0.00	0.00	-0.69	0.98
2 c	-0.18	1.48	0.00	0.00	-0.56	0.59
2 right	-5.10	2.61	0.00	0.00	-5.42	-0.69
3 left	-8.76	2.37	0.00	0.00	-7.59	0.17
3 a	-7.59	2.13	0.00	0.00	-6.96	0.13
3 b	-0.70	0.83	0.00	0.00	-2.05	0.04
3 c	1.77	0.52	0.00	0.00	-0.23	-0.11
3 right	-5.39	2.55	0.00	0.00	-8.96	0.07
4 left	-6.99	2.15	0.00	0.00	-5.70	-0.04
4 a	-5.84	1.96	0.00	0.00	-5.01	-0.08
4 b	0.91	1.00	0.00	0.00	-0.76	0.36
4 c	2.45	0.92	0.00	0.00	-0.47	0.27
4 right	-6.99	2.15	0.00	0.00	-5.70	-0.04
5 left	-5.39	2.56	0.00	0.00	-8.96	0.07
5 a	-4.41	2.31	0.00	0.00	-8.26	0.04
5 b	0.88	0.93	0.00	0.00	-2.72	-0.23
5 c	1.77	0.52	0.00	0.00	-0.23	-0.11
5 right	-8.76	2.37	0.00	0.00	-7.59	0.17
6 left	-5.10	2.61	0.00	0.00	-5.42	-0.69
6 a	-4.28	2.43	0.00	0.00	-4.77	-0.71
6 b	-0.39	1.53	0.00	0.00	-0.71	0.50
6 c	-0.18	1.48	0.00	0.00	-0.56	0.59
6 right	-6.34	2.82	0.00	0.00	-6.15	-0.25
7 left	-13.64	2.07	0.00	0.00	-13.54	0.75
7 a	-12.27	1.82	0.00	0.00	-11.31	0.61
8 a	-0.92	-0.47	0.00	0.00	-0.43	0.34
8 b	-0.42	-0.09	0.00	0.00	-0.37	0.35
11 top	-7.30	-4.04	0.00	0.00	-11.42	-4.73
11 a	-6.67	-3.50	0.00	0.00	-9.88	-4.13
11 b	-4.45	-1.51	0.00	0.00	-5.06	-2.15
12 top	3.66	-3.54	0.00	0.00	-8.82	-1.12
12 a	3.46	-3.04	0.00	0.00	-7.74	-0.97
12 b	2.73	-1.21	0.00	0.00	-4.20	-0.45
13 top	1.60	-3.78	0.00	0.00	-7.27	-2.67
13 a	1.26	-3.27	0.00	0.00	-6.29	-2.36
13 b	0.08	-1.36	0.00	0.00	-3.26	-0.84
14 top	-1.60	-3.78	0.00	0.00	-7.65	-1.32
14 a	-1.26	-3.27	0.00	0.00	-6.72	-1.15
14 b	-0.08	-1.36	0.00	0.00	-3.70	-0.57
15 top	-3.66	-3.54	0.00	0.00	-6.20	-2.50
15 a	-3.46	-3.04	0.00	0.00	-5.35	-2.19
15 b	-2.73	-1.21	0.00	0.00	-2.77	-0.74
16 top	7.30	-4.04	0.00	0.00	-5.39	-1.62
16 a	6.67	-3.50	0.00	0.00	-4.73	-1.43
16 b	4.45	-1.51	0.00	0.00	-2.62	-0.75

VEH: R2 - TOLL ROAD BRUG(5.75.44) page 61
date 10/09/2009; time 10:51:51
Cline Avenue - Load Rating - Triple Box - 6 Webs - 111'-4" W

Summary of the results (Maximum)

Section	--- Deadload ---- Moment	Ax.Frc	----- P.T. ------ Moment	Ax.Frc	--- Live load --- Moment	Ax.Frc
1 a	-3.85	0.45	0.00	0.00	0.94	0.10
1 b	-12.27	1.82	0.00	0.00	0.00	0.00
1 right	-13.64	2.07	0.00	0.00	0.00	0.01
2 left	-6.34	2.82	0.00	0.00	0.02	0.00
2 a	-5.43	2.62	0.00	0.00	0.54	1.20
2 b	-0.74	1.59	0.00	0.00	2.89	-0.04
2 c	-0.18	1.48	0.00	0.00	3.32	-0.50
2 right	-5.10	2.61	0.00	0.00	1.37	0.94
3 left	-8.76	2.37	0.00	0.00	4.52	0.84
3 a	-7.59	2.13	0.00	0.00	4.48	0.61
3 b	-0.70	0.83	0.00	0.00	4.23	0.10
3 c	1.77	0.52	0.00	0.00	3.87	0.01
3 right	-5.39	2.55	0.00	0.00	3.16	1.12
4 left	-6.99	2.15	0.00	0.00	1.10	1.35
4 a	-5.84	1.96	0.00	0.00	1.78	0.98
4 b	0.91	1.00	0.00	0.00	3.24	0.21
4 c	2.45	0.92	0.00	0.00	3.33	-0.10
4 right	-6.99	2.15	0.00	0.00	1.10	1.35
5 left	-5.39	2.56	0.00	0.00	3.16	1.12
5 a	-4.41	2.31	0.00	0.00	3.19	0.99
5 b	0.88	0.93	0.00	0.00	3.60	0.39
5 c	1.77	0.52	0.00	0.00	3.87	0.01
5 right	-8.76	2.37	0.00	0.00	4.52	0.84
6 left	-5.10	2.61	0.00	0.00	1.37	0.94
6 a	-4.28	2.43	0.00	0.00	2.02	0.61
6 b	-0.39	1.53	0.00	0.00	3.24	-0.18
6 c	-0.18	1.48	0.00	0.00	3.32	-0.50
6 right	-6.34	2.82	0.00	0.00	0.02	0.00
7 left	-13.64	2.07	0.00	0.00	0.00	0.01
7 a	-12.27	1.82	0.00	0.00	0.00	0.00
8 a	-0.92	-0.47	0.00	0.00	0.94	-1.18
8 b	-0.42	-0.09	0.00	0.00	0.80	-0.98
11 top	-7.30	-4.04	0.00	0.00	4.46	-1.41
11 a	-6.67	-3.50	0.00	0.00	3.95	-1.23
11 b	-4.45	-1.51	0.00	0.00	2.24	-0.62
12 top	3.66	-3.54	0.00	0.00	4.96	-1.23
12 a	3.46	-3.04	0.00	0.00	4.36	-1.09
12 b	2.73	-1.21	0.00	0.00	2.35	-0.60
13 top	1.60	-3.78	0.00	0.00	6.71	-1.10
13 a	1.26	-3.27	0.00	0.00	5.94	-0.95
13 b	0.08	-1.36	0.00	0.00	3.31	-0.44
14 top	-1.60	-3.78	0.00	0.00	6.03	-1.40
14 a	-1.27	-3.27	0.00	0.00	5.30	-1.24
14 b	-0.08	-1.36	0.00	0.00	2.83	-0.69
15 top	-3.66	-3.54	0.00	0.00	7.86	-0.91
15 a	-3.46	-3.04	0.00	0.00	6.94	-0.77
15 b	-2.73	-1.21	0.00	0.00	3.81	-0.33
16 top	7.30	-4.04	0.00	0.00	9.42	-4.92
16 a	6.67	-3.50	0.00	0.00	8.25	-4.15
16 b	4.45	-1.51	0.00	0.00	4.30	-1.80

VEH: R2 - TOLL ROAD BRUG(5.75.44) page 62
date 10/09/2009; time 10:51:51
Cline Avenue - Load Rating - Triple Box - 6 Webs - 111'-4" W

Summary of the results (Minimum)

Section	--- Deadload ---- Moment	Ax.Frc	----- P.T. ------ Moment	Ax.Frc	--- Live load --- Moment	Ax.Frc
1 a	-3.85	0.45	0.00	0.00	-1.35	0.09
1 b	-12.27	1.82	0.00	0.00	-9.09	0.46
1 right	-13.64	2.07	0.00	0.00	-11.44	0.63
2 left	-6.34	2.82	0.00	0.00	-4.83	-0.23
2 a	-5.43	2.62	0.00	0.00	-4.51	-0.27
2 b	-0.74	1.59	0.00	0.00	-0.45	0.80
2 c	-0.18	1.48	0.00	0.00	-0.42	0.47
2 right	-5.10	2.61	0.00	0.00	-4.35	-0.66
3 left	-8.76	2.37	0.00	0.00	-6.06	0.16
3 a	-7.59	2.13	0.00	0.00	-5.54	0.13
3 b	-0.70	0.83	0.00	0.00	-1.85	0.10
3 c	1.77	0.52	0.00	0.00	-0.20	-0.10
3 right	-5.39	2.55	0.00	0.00	-7.40	0.07
4 left	-6.99	2.15	0.00	0.00	-4.64	-0.06
4 a	-5.84	1.96	0.00	0.00	-4.07	-0.09
4 b	0.91	1.00	0.00	0.00	-0.62	0.33
4 c	2.45	0.92	0.00	0.00	-0.40	0.18
4 right	-6.99	2.15	0.00	0.00	-4.64	-0.06
5 left	-5.39	2.56	0.00	0.00	-7.40	0.07
5 a	-4.41	2.31	0.00	0.00	-6.81	0.04
5 b	0.88	0.93	0.00	0.00	-2.52	-0.19
5 c	1.77	0.52	0.00	0.00	-0.20	-0.10
5 right	-8.76	2.37	0.00	0.00	-6.06	0.16
6 left	-5.10	2.61	0.00	0.00	-4.35	-0.66
6 a	-4.28	2.43	0.00	0.00	-3.83	-0.68
6 b	-0.39	1.53	0.00	0.00	-0.58	0.42
6 c	-0.18	1.48	0.00	0.00	-0.42	0.47
6 right	-6.34	2.82	0.00	0.00	-4.83	-0.23
7 left	-13.64	2.07	0.00	0.00	-11.45	0.63
7 a	-12.27	1.82	0.00	0.00	-9.10	0.46
8 a	-0.92	-0.47	0.00	0.00	-0.38	0.31
8 b	-0.42	-0.09	0.00	0.00	-0.32	0.32
11 top	-7.30	-4.04	0.00	0.00	-9.42	-4.92
11 a	-6.67	-3.50	0.00	0.00	-8.25	-4.15
11 b	-4.45	-1.51	0.00	0.00	-4.30	-1.80
12 top	3.66	-3.54	0.00	0.00	-7.86	-0.91
12 a	3.46	-3.04	0.00	0.00	-6.94	-0.77
12 b	2.73	-1.21	0.00	0.00	-3.81	-0.33
13 top	1.60	-3.78	0.00	0.00	-6.03	-1.40
13 a	1.26	-3.27	0.00	0.00	-5.30	-1.24
13 b	0.08	-1.36	0.00	0.00	-2.83	-0.69
14 top	-1.60	-3.78	0.00	0.00	-6.71	-1.10
14 a	-1.27	-3.27	0.00	0.00	-5.94	-0.95
14 b	-0.08	-1.36	0.00	0.00	-3.31	-0.44
15 top	-3.66	-3.54	0.00	0.00	-4.96	-1.23
15 a	-3.46	-3.04	0.00	0.00	-4.36	-1.09
15 b	-2.73	-1.21	0.00	0.00	-2.35	-0.60
16 top	7.30	-4.04	0.00	0.00	-4.46	-1.41
16 a	6.67	-3.50	0.00	0.00	-3.95	-1.23
16 b	4.45	-1.51	0.00	0.00	-2.24	-0.62

VEH: R3 - TOLL ROAD BRUG(5.75.44) page 61
date 10/09/2009; time 10:51:51
Cline Avenue - Load Rating - Triple Box - 6 Webs - 111'-4" W

Summary of the results (Maximum)

Section	--- Deadload ---- Moment	Ax.Frc	----- P.T. ------ Moment	Ax.Frc	--- Live load --- Moment	Ax.Frc
1 a	-3.85	0.45	0.00	0.00	0.74	0.04
1 b	-12.27	1.82	0.00	0.00	0.00	0.01
1 right	-13.64	2.07	0.00	0.00	-0.01	0.01
2 left	-6.34	2.82	0.00	0.00	0.02	0.01
2 a	-5.43	2.62	0.00	0.00	0.42	1.24
2 b	-0.74	1.59	0.00	0.00	3.10	-0.12
2 c	-0.18	1.48	0.00	0.00	3.29	-0.62
2 right	-5.10	2.61	0.00	0.00	1.29	0.73
3 left	-8.76	2.37	0.00	0.00	5.31	0.63
3 a	-7.59	2.13	0.00	0.00	5.54	0.51
3 b	-0.70	0.83	0.00	0.00	4.88	-0.03
3 c	1.77	0.52	0.00	0.00	3.93	0.04
3 right	-5.39	2.55	0.00	0.00	3.54	1.04
4 left	-6.99	2.15	0.00	0.00	0.94	1.21
4 a	-5.84	1.96	0.00	0.00	1.76	0.90
4 b	0.91	1.00	0.00	0.00	3.53	0.03
4 c	2.45	0.92	0.00	0.00	3.45	-0.25
4 right	-6.99	2.15	0.00	0.00	0.94	1.21
5 left	-5.39	2.56	0.00	0.00	3.54	1.04
5 a	-4.41	2.31	0.00	0.00	3.87	0.92
5 b	0.88	0.93	0.00	0.00	4.07	0.31
5 c	1.77	0.52	0.00	0.00	3.93	0.04
5 right	-8.76	2.37	0.00	0.00	5.31	0.63
6 left	-5.10	2.61	0.00	0.00	1.29	0.73
6 a	-4.28	2.43	0.00	0.00	2.07	0.38
6 b	-0.39	1.53	0.00	0.00	3.53	-0.40
6 c	-0.18	1.48	0.00	0.00	3.29	-0.62
6 right	-6.34	2.82	0.00	0.00	0.02	0.01
7 left	-13.64	2.07	0.00	0.00	-0.01	0.01
7 a	-12.27	1.82	0.00	0.00	0.00	0.01
8 a	-0.92	-0.47	0.00	0.00	1.02	-1.15
8 b	-0.42	-0.09	0.00	0.00	0.85	-0.91
11 top	-7.30	-4.04	0.00	0.00	4.52	-1.67
11 a	-6.67	-3.50	0.00	0.00	3.92	-1.47
11 b	-4.45	-1.51	0.00	0.00	2.14	-0.77
12 top	3.66	-3.54	0.00	0.00	4.93	-1.41
12 a	3.46	-3.04	0.00	0.00	4.26	-1.25
12 b	2.73	-1.21	0.00	0.00	2.21	-0.59
13 top	1.60	-3.78	0.00	0.00	7.58	-1.24
13 a	1.26	-3.27	0.00	0.00	6.61	-1.08
13 b	0.08	-1.36	0.00	0.00	3.59	-0.53
14 top	-1.60	-3.78	0.00	0.00	6.32	-1.62
14 a	-1.26	-3.27	0.00	0.00	5.48	-1.45
14 b	-0.08	-1.36	0.00	0.00	2.85	-0.72
15 top	-3.66	-3.54	0.00	0.00	9.03	-0.98
15 a	-3.46	-3.04	0.00	0.00	7.88	-0.85
15 b	-2.73	-1.21	0.00	0.00	4.21	-0.37
16 top	7.30	-4.04	0.00	0.00	9.59	-4.57
16 a	6.67	-3.50	0.00	0.00	8.19	-4.04
16 b	4.45	-1.51	0.00	0.00	4.03	-2.15

VEH: R3 - TOLL ROAD BRUG(5.75.44) page 62
date 10/09/2009; time 10:51:51
Cline Avenue - Load Rating - Triple Box - 6 Webs - 111'-4" W

Summary of the results (Minimum)

Section	--- Deadload ---- Moment	Ax.Frc	----- P.T. ------ Moment	Ax.Frc	--- Live load --- Moment	Ax.Frc
1 a	-3.85	0.45	0.00	0.00	-1.49	0.03
1 b	-12.27	1.82	0.00	0.00	-9.20	0.38
1 right	-13.64	2.07	0.00	0.00	-11.18	0.50
2 left	-6.34	2.82	0.00	0.00	-5.53	-0.22
2 a	-5.43	2.62	0.00	0.00	-4.90	-0.27
2 b	-0.74	1.59	0.00	0.00	-0.22	0.64
2 c	-0.18	1.48	0.00	0.00	-0.24	0.33
2 right	-5.10	2.61	0.00	0.00	-4.40	-0.81
3 left	-8.76	2.37	0.00	0.00	-6.21	0.18
3 a	-7.59	2.13	0.00	0.00	-5.72	0.15
3 b	-0.70	0.83	0.00	0.00	-2.18	0.14
3 c	1.77	0.52	0.00	0.00	-0.18	-0.02
3 right	-5.39	2.55	0.00	0.00	-7.94	0.09
4 left	-6.99	2.15	0.00	0.00	-4.80	-0.18
4 a	-5.84	1.96	0.00	0.00	-4.24	-0.21
4 b	0.91	1.00	0.00	0.00	-0.60	0.21
4 c	2.45	0.92	0.00	0.00	-0.37	0.10
4 right	-6.99	2.15	0.00	0.00	-4.80	-0.18
5 left	-5.39	2.56	0.00	0.00	-7.94	0.09
5 a	-4.41	2.31	0.00	0.00	-7.36	0.05
5 b	0.88	0.93	0.00	0.00	-3.03	-0.18
5 c	1.77	0.52	0.00	0.00	-0.18	-0.02
5 right	-8.76	2.37	0.00	0.00	-6.21	0.18
6 left	-5.10	2.61	0.00	0.00	-4.40	-0.81
6 a	-4.28	2.43	0.00	0.00	-3.89	-0.82
6 b	-0.39	1.53	0.00	0.00	-0.52	0.42
6 c	-0.18	1.48	0.00	0.00	-0.24	0.33
6 right	-6.34	2.82	0.00	0.00	-5.53	-0.22
7 left	-13.64	2.07	0.00	0.00	-11.19	0.50
7 a	-12.27	1.82	0.00	0.00	-9.20	0.38
8 a	-0.92	-0.47	0.00	0.00	-0.35	0.33
8 b	-0.42	-0.09	0.00	0.00	-0.30	0.34
11 top	-7.30	-4.04	0.00	0.00	-9.59	-4.57
11 a	-6.67	-3.50	0.00	0.00	-8.19	-4.04
11 b	-4.45	-1.51	0.00	0.00	-4.03	-2.15
12 top	3.66	-3.54	0.00	0.00	-9.03	-0.98
12 a	3.46	-3.04	0.00	0.00	-7.88	-0.85
12 b	2.73	-1.21	0.00	0.00	-4.21	-0.37
13 top	1.60	-3.78	0.00	0.00	-6.32	-1.62
13 a	1.26	-3.27	0.00	0.00	-5.48	-1.45
13 b	0.08	-1.36	0.00	0.00	-2.85	-0.72
14 top	-1.60	-3.78	0.00	0.00	-7.58	-1.24
14 a	-1.26	-3.27	0.00	0.00	-6.61	-1.08
14 b	-0.08	-1.36	0.00	0.00	-3.59	-0.53
15 top	-3.66	-3.54	0.00	0.00	-4.93	-1.41
15 a	-3.46	-3.04	0.00	0.00	-4.26	-1.25
15 b	-2.73	-1.21	0.00	0.00	-2.21	-0.59
16 top	7.30	-4.04	0.00	0.00	-4.52	-1.67
16 a	6.67	-3.50	0.00	0.00	-3.92	-1.47
16 b	4.45	-1.51	0.00	0.00	-2.14	-0.77

VEH: R4 - MICHIGAN T BRUG(5.75.44) page 61
date 10/09/2009; time 10:51:52
Cline Avenue - Load Rating - Double Box - 3 Webs - 48'-4" Wi

Summary of the results (Maximum)

Section	--- Deadload ---		----- P.T. ------		--- Live load ---	
	Moment	Ax.Frc	Moment	Ax.Frc	Moment	Ax.Frc
1 a	-3.85	0.45	0.00	0.00	0.58	0.09
1 b	-12.27	1.82	0.00	0.00	0.24	0.40
1 right	-13.64	2.07	0.00	0.00	0.05	0.55
2 left	-6.34	2.82	0.00	0.00	0.70	1.68
2 a	-5.43	2.62	0.00	0.00	1.62	1.33
2 b	-0.74	1.59	0.00	0.00	3.26	-0.09
2 c	-0.18	1.48	0.00	0.00	3.45	-0.65
2 right	-5.10	2.61	0.00	0.00	2.86	0.82
3 left	-8.76	2.37	0.00	0.00	7.08	0.46
3 a	-7.59	2.13	0.00	0.00	7.02	0.42
3 b	-0.70	0.83	0.00	0.00	5.35	0.08
3 c	1.77	0.52	0.00	0.00	3.98	0.10
3 right	-5.39	2.55	0.00	0.00	5.08	1.18
4 left	-6.99	2.15	0.00	0.00	2.46	1.39
4 a	-5.84	1.96	0.00	0.00	3.11	1.04
4 b	0.91	1.00	0.00	0.00	3.76	0.21
4 c	2.45	0.92	0.00	0.00	3.61	-0.13
4 right	-6.99	2.15	0.00	0.00	2.46	1.39
5 left	-5.39	2.56	0.00	0.00	5.08	1.18
5 a	-4.41	2.31	0.00	0.00	5.14	1.02
5 b	0.88	0.93	0.00	0.00	4.44	0.51
5 c	1.77	0.52	0.00	0.00	3.98	0.10
5 right	-8.76	2.37	0.00	0.00	7.08	0.46
6 left	-5.10	2.61	0.00	0.00	2.86	0.82
6 a	-4.28	2.43	0.00	0.00	3.45	0.41
6 b	-0.39	1.53	0.00	0.00	3.76	-0.34
6 c	-0.18	1.48	0.00	0.00	3.45	-0.65
6 right	-6.34	2.82	0.00	0.00	0.70	1.68
7 left	-13.64	2.07	0.00	0.00	0.05	0.55
7 a	-12.27	1.82	0.00	0.00	0.24	0.40
8 a	-0.92	-0.47	0.00	0.00	1.21	-1.39
8 b	-0.42	-0.09	0.00	0.00	1.05	-1.17
11 top	-7.30	-4.04	0.00	0.00	5.00	-0.93
11 a	-6.67	-3.50	0.00	0.00	4.43	-0.82
11 b	-4.45	-1.51	0.00	0.00	2.65	-0.58
12 top	3.66	-3.54	0.00	0.00	5.70	-1.07
12 a	3.46	-3.04	0.00	0.00	5.04	-0.96
12 b	2.73	-1.21	0.00	0.00	2.76	-0.54
13 top	1.60	-3.78	0.00	0.00	8.50	-0.77
13 a	1.26	-3.27	0.00	0.00	7.54	-0.66
13 b	0.08	-1.36	0.00	0.00	4.26	-0.30
14 top	-1.60	-3.78	0.00	0.00	7.26	-1.32
14 a	-1.26	-3.27	0.00	0.00	6.41	-1.18
14 b	-0.08	-1.36	0.00	0.00	3.47	-0.65
15 top	-3.66	-3.54	0.00	0.00	9.93	-0.16
15 a	-3.46	-3.04	0.00	0.00	8.99	-0.39
15 b	-2.73	-1.21	0.00	0.00	4.97	-0.12
16 top	7.30	-4.04	0.00	0.00	11.14	-3.92
16 a	6.67	-3.50	0.00	0.00	9.68	-3.31
16 b	4.45	-1.51	0.00	0.00	5.05	-1.59

VEH: R4 - MICHIGAN T BRUG(5.75.44) page 62
date 10/09/2009; time 10:51:52
Cline Avenue - Load Rating - Double Box - 3 Webs - 48'-4" Wi

Summary of the results (Minimum)

Section	--- Deadload ---		----- P.T. ------		--- Live load ---	
	Moment	Ax.Frc	Moment	Ax.Frc	Moment	Ax.Frc
1 a	-3.85	0.45	0.00	0.00	-1.74	0.09
1 b	-12.27	1.82	0.00	0.00	-9.38	0.39
1 right	-13.64	2.07	0.00	0.00	-11.47	0.51
2 left	-6.34	2.82	0.00	0.00	-5.06	-0.34
2 a	-5.43	2.62	0.00	0.00	-4.54	-0.37
2 b	-0.74	1.59	0.00	0.00	-0.26	0.88
2 c	-0.18	1.48	0.00	0.00	-0.41	0.50
2 right	-5.10	2.61	0.00	0.00	-3.87	-1.01
3 left	-8.76	2.37	0.00	0.00	-6.56	0.19
3 a	-7.59	2.13	0.00	0.00	-6.04	0.17
3 b	-0.70	0.83	0.00	0.00	-2.41	0.25
3 c	1.77	0.52	0.00	0.00	-0.24	-0.14
3 right	-5.39	2.55	0.00	0.00	-8.53	0.00
4 left	-6.99	2.15	0.00	0.00	-4.34	-0.21
4 a	-5.84	1.96	0.00	0.00	-3.87	-0.21
4 b	0.91	1.00	0.00	0.00	-0.72	0.25
4 c	2.45	0.92	0.00	0.00	-0.46	0.28
4 right	-6.99	2.15	0.00	0.00	-4.34	-0.21
5 left	-5.39	2.56	0.00	0.00	-8.53	0.00
5 a	-4.41	2.31	0.00	0.00	-7.91	-0.02
5 b	0.88	0.93	0.00	0.00	-3.41	-0.22
5 c	1.77	0.52	0.00	0.00	-0.24	-0.14
5 right	-8.76	2.37	0.00	0.00	-6.56	0.19
6 left	-5.10	2.61	0.00	0.00	-3.87	-1.01
6 a	-4.28	2.43	0.00	0.00	-3.46	-0.99
6 b	-0.39	1.53	0.00	0.00	-0.63	0.49
6 c	-0.18	1.48	0.00	0.00	-0.41	0.50
6 right	-6.34	2.82	0.00	0.00	-5.06	-0.34
7 left	-13.64	2.07	0.00	0.00	-11.47	0.51
7 a	-12.27	1.82	0.00	0.00	-9.39	0.39
8 a	-0.92	-0.47	0.00	0.00	-0.48	0.42
8 b	-0.42	-0.09	0.00	0.00	-0.41	0.46
11 top	-7.30	-4.04	0.00	0.00	-11.13	-3.92
11 a	-6.67	-3.50	0.00	0.00	-9.68	-3.31
11 b	-4.45	-1.51	0.00	0.00	-5.05	-1.59
12 top	3.66	-3.54	0.00	0.00	-9.93	-0.16
12 a	3.46	-3.04	0.00	0.00	-8.99	-0.39
12 b	2.73	-1.21	0.00	0.00	-4.97	-0.12
13 top	1.60	-3.78	0.00	0.00	-7.26	-1.32
13 a	1.26	-3.27	0.00	0.00	-6.41	-1.18
13 b	0.08	-1.36	0.00	0.00	-3.47	-0.65
14 top	-1.60	-3.78	0.00	0.00	-8.50	-0.77
14 a	-1.26	-3.27	0.00	0.00	-7.54	-0.66
14 b	-0.08	-1.36	0.00	0.00	-4.26	-0.30
15 top	-3.66	-3.54	0.00	0.00	-5.70	-1.07
15 a	-3.46	-3.04	0.00	0.00	-5.04	-0.96
15 b	-2.73	-1.21	0.00	0.00	-2.76	-0.54
16 top	7.30	-4.04	0.00	0.00	-5.00	-0.93
16 a	6.67	-3.50	0.00	0.00	-4.43	-0.82
16 b	4.45	-1.51	0.00	0.00	-2.65	-0.58

VEH: R5 - MICHIGAN T BRUG(5.75.44) page 61
date 10/09/2009; time 10:51:53
Cline Avenue - Load Rating - Triple Box - 6 Webs - 111'-4" W

Summary of the results (Maximum)

Section	--- Deadload ---- Moment	Ax.Frc	----- P.T. ------ Moment	Ax.Frc	--- Live load --- Moment	Ax.Frc
1 a	-3.85	0.45	0.00	0.00	0.28	0.12
1 b	-12.27	1.82	0.00	0.00	-0.01	0.01
1 right	-13.64	2.07	0.00	0.00	-0.01	0.01
2 left	-6.34	2.82	0.00	0.00	0.03	0.00
2 a	-5.43	2.62	0.00	0.00	0.74	1.64
2 b	-0.74	1.59	0.00	0.00	3.49	-0.31
2 c	-0.18	1.48	0.00	0.00	3.72	-0.72
2 right	-5.10	2.61	0.00	0.00	2.27	0.85
3 left	-8.76	2.37	0.00	0.00	6.63	0.77
3 a	-7.59	2.13	0.00	0.00	6.58	0.69
3 b	-0.70	0.83	0.00	0.00	5.50	0.10
3 c	1.77	0.52	0.00	0.00	4.40	0.03
3 right	-5.39	2.55	0.00	0.00	4.62	1.33
4 left	-6.99	2.15	0.00	0.00	1.87	1.50
4 a	-5.84	1.96	0.00	0.00	2.41	1.32
4 b	0.91	1.00	0.00	0.00	3.99	0.25
4 c	2.45	0.92	0.00	0.00	3.88	-0.17
4 right	-6.99	2.15	0.00	0.00	1.87	1.50
5 left	-5.39	2.56	0.00	0.00	4.62	1.33
5 a	-4.41	2.31	0.00	0.00	4.67	1.24
5 b	0.88	0.93	0.00	0.00	4.58	0.54
5 c	1.77	0.52	0.00	0.00	4.40	0.03
5 right	-8.76	2.37	0.00	0.00	6.63	0.77
6 left	-5.10	2.61	0.00	0.00	2.27	0.85
6 a	-4.28	2.43	0.00	0.00	2.76	0.67
6 b	-0.39	1.53	0.00	0.00	3.98	-0.31
6 c	-0.18	1.48	0.00	0.00	3.72	-0.72
6 right	-6.34	2.82	0.00	0.00	0.03	0.00
7 left	-13.64	2.07	0.00	0.00	-0.01	0.01
7 a	-12.27	1.82	0.00	0.00	-0.01	0.01
8 a	-0.92	-0.47	0.00	0.00	1.33	-1.63
8 b	-0.42	-0.09	0.00	0.00	1.13	-1.34
11 top	-7.30	-4.04	0.00	0.00	6.17	-1.66
11 a	-6.67	-3.50	0.00	0.00	5.46	-1.48
11 b	-4.45	-1.51	0.00	0.00	3.08	-0.81
12 top	3.66	-3.54	0.00	0.00	6.86	-1.57
12 a	3.46	-3.04	0.00	0.00	6.02	-1.40
12 b	2.73	-1.21	0.00	0.00	3.22	-0.80
13 top	1.60	-3.78	0.00	0.00	9.54	-1.18
13 a	1.26	-3.27	0.00	0.00	8.44	-1.05
13 b	0.08	-1.36	0.00	0.00	4.69	-0.54
14 top	-1.60	-3.78	0.00	0.00	8.44	-1.82
14 a	-1.26	-3.27	0.00	0.00	7.41	-1.63
14 b	-0.08	-1.36	0.00	0.00	3.93	-0.95
15 top	-3.66	-3.54	0.00	0.00	11.23	-0.90
15 a	-3.46	-3.04	0.00	0.00	9.91	-0.78
15 b	-2.73	-1.21	0.00	0.00	5.41	-0.36
16 top	7.30	-4.04	0.00	0.00	13.04	-4.01
16 a	6.67	-3.50	0.00	0.00	11.40	-3.58
16 b	4.45	-1.51	0.00	0.00	5.90	-2.05

VEH: R5 - MICHIGAN T BRUG(5.75.44) page 62
date 10/09/2009; time 10:51:53
Cline Avenue - Load Rating - Triple Box - 6 Webs - 111'-4" W

Summary of the results (Minimum)

Section	--- Deadload ---- Moment	Ax.Frc	----- P.T. ------ Moment	Ax.Frc	--- Live load --- Moment	Ax.Frc
1 a	-3.85	0.45	0.00	0.00	-2.66	0.12
1 b	-12.27	1.82	0.00	0.00	-12.39	0.57
1 right	-13.64	2.07	0.00	0.00	-14.43	0.66
2 left	-6.34	2.82	0.00	0.00	-6.79	-0.32
2 a	-5.43	2.62	0.00	0.00	-5.97	-0.38
2 b	-0.74	1.59	0.00	0.00	-0.54	1.07
2 c	-0.18	1.48	0.00	0.00	-0.54	0.62
2 right	-5.10	2.61	0.00	0.00	-5.64	-0.98
3 left	-8.76	2.37	0.00	0.00	-8.38	0.22
3 a	-7.59	2.13	0.00	0.00	-7.67	0.19
3 b	-0.70	0.83	0.00	0.00	-2.64	0.16
3 c	1.77	0.52	0.00	0.00	-0.27	-0.14
3 right	-5.39	2.55	0.00	0.00	-10.36	0.09
4 left	-6.99	2.15	0.00	0.00	-6.06	-0.13
4 a	-5.84	1.96	0.00	0.00	-5.30	-0.15
4 b	0.91	1.00	0.00	0.00	-0.84	0.47
4 c	2.45	0.92	0.00	0.00	-0.54	0.26
4 right	-6.99	2.15	0.00	0.00	-6.06	-0.13
5 left	-5.39	2.56	0.00	0.00	-10.36	0.10
5 a	-4.41	2.31	0.00	0.00	-9.54	0.06
5 b	0.88	0.93	0.00	0.00	-3.62	-0.25
5 c	1.77	0.52	0.00	0.00	-0.27	-0.14
5 right	-8.76	2.37	0.00	0.00	-8.38	0.22
6 left	-5.10	2.61	0.00	0.00	-5.64	-0.98
6 a	-4.28	2.43	0.00	0.00	-4.92	-0.98
6 b	-0.39	1.53	0.00	0.00	-0.77	0.59
6 c	-0.18	1.48	0.00	0.00	-0.54	0.62
6 right	-6.34	2.82	0.00	0.00	-6.79	-0.32
7 left	-13.64	2.07	0.00	0.00	-14.43	0.66
7 a	-12.27	1.82	0.00	0.00	-12.39	0.57
8 a	-0.92	-0.47	0.00	0.00	-0.52	0.44
8 b	-0.42	-0.09	0.00	0.00	-0.45	0.46
11 top	-7.30	-4.04	0.00	0.00	-13.03	-4.01
11 a	-6.67	-3.50	0.00	0.00	-11.40	-3.58
11 b	-4.45	-1.51	0.00	0.00	-5.90	-2.05
12 top	3.66	-3.54	0.00	0.00	-11.23	-0.90
12 a	3.46	-3.04	0.00	0.00	-9.91	-0.78
12 b	2.73	-1.21	0.00	0.00	-5.41	-0.36
13 top	1.60	-3.78	0.00	0.00	-8.44	-1.82
13 a	1.26	-3.27	0.00	0.00	-7.41	-1.63
13 b	0.08	-1.36	0.00	0.00	-3.93	-0.95
14 top	-1.60	-3.78	0.00	0.00	-9.54	-1.19
14 a	-1.26	-3.27	0.00	0.00	-8.44	-1.05
14 b	-0.08	-1.36	0.00	0.00	-4.69	-0.54
15 top	-3.66	-3.54	0.00	0.00	-6.86	-1.57
15 a	-3.46	-3.04	0.00	0.00	-6.02	-1.40
15 b	-2.73	-1.21	0.00	0.00	-3.22	-0.80
16 top	7.30	-4.04	0.00	0.00	-6.17	-1.66
16 a	6.67	-3.50	0.00	0.00	-5.46	-1.48
16 b	4.45	-1.51	0.00	0.00	-3.08	-0.81

VEH: S1-SPECIAL TRUC BRUG(5.75.44) page 61
date 10/09/2009; time 10:51:53
Cline Avenue - Load Rating - Triple Box-6 Webs-111'-4" Wide

Summary of the results (Maximum)

Section	--- Deadload ---		----- P.T. ------		--- Live load ---	
	Moment	Ax.Frc	Moment	Ax.Frc	Moment	Ax.Frc
1 a	-3.85	0.45	0.00	0.00	0.92	0.06
1 b	-12.27	1.82	0.00	0.00	-0.01	0.02
1 right	-13.64	2.07	0.00	0.00	-0.01	0.02
2 left	-6.34	2.82	0.00	0.00	0.04	0.01
2 a	-5.43	2.62	0.00	0.00	0.61	1.63
2 b	-0.74	1.59	0.00	0.00	4.15	-0.20
2 c	-0.18	1.48	0.00	0.00	4.45	-0.91
2 right	-5.10	2.61	0.00	0.00	1.99	0.82
3 left	-8.76	2.37	0.00	0.00	8.33	0.77
3 a	-7.59	2.13	0.00	0.00	8.53	0.61
3 b	-0.70	0.83	0.00	0.00	6.97	-0.06
3 c	1.77	0.52	0.00	0.00	5.24	0.04
3 right	-5.39	2.55	0.00	0.00	5.60	1.30
4 left	-6.99	2.15	0.00	0.00	1.45	1.50
4 a	-5.84	1.96	0.00	0.00	2.52	1.07
4 b	0.91	1.00	0.00	0.00	4.80	-0.10
4 c	2.45	0.92	0.00	0.00	4.68	-0.48
4 right	-6.99	2.15	0.00	0.00	1.45	1.50
5 left	-5.39	2.56	0.00	0.00	5.60	1.30
5 a	-4.41	2.31	0.00	0.00	5.95	1.14
5 b	0.88	0.93	0.00	0.00	5.72	0.39
5 c	1.77	0.52	0.00	0.00	5.24	0.04
5 right	-8.76	2.37	0.00	0.00	8.33	0.77
6 left	-5.10	2.61	0.00	0.00	1.99	0.82
6 a	-4.28	2.43	0.00	0.00	3.00	0.35
6 b	-0.39	1.53	0.00	0.00	4.80	-0.64
6 c	-0.18	1.48	0.00	0.00	4.45	-0.91
6 right	-6.34	2.82	0.00	0.00	0.04	0.01
7 left	-13.64	2.07	0.00	0.00	-0.01	0.02
7 a	-12.27	1.82	0.00	0.00	-0.01	0.02
8 a	-0.92	-0.47	0.00	0.00	1.41	-1.54
8 b	-0.42	-0.09	0.00	0.00	1.18	-1.23
11 top	-7.30	-4.04	0.00	0.00	6.11	-2.19
11 a	-6.67	-3.50	0.00	0.00	5.31	-1.94
11 b	-4.45	-1.51	0.00	0.00	2.93	-1.03
12 top	3.66	-3.54	0.00	0.00	6.66	-1.86
12 a	3.46	-3.04	0.00	0.00	5.80	-1.41
12 b	2.73	-1.21	0.00	0.00	3.06	-0.79
13 top	1.60	-3.78	0.00	0.00	10.80	-1.53
13 a	1.26	-3.27	0.00	0.00	9.45	-1.34
13 b	0.08	-1.36	0.00	0.00	5.17	-0.66
14 top	-1.60	-3.78	0.00	0.00	8.81	-1.91
14 a	-1.26	-3.27	0.00	0.00	7.69	-1.71
14 b	-0.08	-1.36	0.00	0.00	4.05	-0.99
15 top	-3.66	-3.54	0.00	0.00	13.02	-1.13
15 a	-3.46	-3.04	0.00	0.00	11.39	-0.98
15 b	-2.73	-1.21	0.00	0.00	6.13	-0.41
16 top	7.30	-4.04	0.00	0.00	12.86	-5.91
16 a	6.67	-3.50	0.00	0.00	11.01	-5.22
16 b	4.45	-1.51	0.00	0.00	5.43	-2.81

VEH: S1-SPECIAL TRUC BRUG(5.75.44) page 62
date 10/09/2009; time 10:51:53
Cline Avenue - Load Rating - Triple Box-6 Webs-111'-4" Wide

Summary of the results (Minimum)

Section	--- Deadload ---		----- P.T. ------		--- Live load ---	
	Moment	Ax.Frc	Moment	Ax.Frc	Moment	Ax.Frc
1 a	-3.85	0.45	0.00	0.00	-2.05	0.05
1 b	-12.27	1.82	0.00	0.00	-12.29	0.50
1 right	-13.64	2.07	0.00	0.00	-14.89	0.65
2 left	-6.34	2.82	0.00	0.00	-7.37	-0.32
2 a	-5.43	2.62	0.00	0.00	-6.52	-0.40
2 b	-0.74	1.59	0.00	0.00	-0.25	0.84
2 c	-0.18	1.48	0.00	0.00	-0.26	0.40
2 right	-5.10	2.61	0.00	0.00	-5.62	-1.23
3 left	-8.76	2.37	0.00	0.00	-8.33	0.23
3 a	-7.59	2.13	0.00	0.00	-7.74	0.20
3 b	-0.70	0.83	0.00	0.00	-3.14	0.19
3 c	1.77	0.52	0.00	0.00	-0.28	-0.01
3 right	-5.39	2.55	0.00	0.00	-11.01	0.03
4 left	-6.99	2.15	0.00	0.00	-6.24	-0.40
4 a	-5.84	1.96	0.00	0.00	-5.49	-0.43
4 b	0.91	1.00	0.00	0.00	-0.88	0.36
4 c	2.45	0.92	0.00	0.00	-0.55	0.15
4 right	-6.99	2.15	0.00	0.00	-6.25	-0.40
5 left	-5.39	2.56	0.00	0.00	-11.01	0.03
5 a	-4.41	2.31	0.00	0.00	-10.28	0.00
5 b	0.88	0.93	0.00	0.00	-4.46	-0.24
5 c	1.77	0.52	0.00	0.00	-0.28	-0.01
5 right	-8.76	2.37	0.00	0.00	-8.33	0.23
6 left	-5.10	2.61	0.00	0.00	-5.62	-1.23
6 a	-4.28	2.43	0.00	0.00	-4.95	-1.24
6 b	-0.39	1.53	0.00	0.00	-0.76	0.61
6 c	-0.18	1.48	0.00	0.00	-0.26	0.40
6 right	-6.34	2.82	0.00	0.00	-7.37	-0.32
7 left	-13.64	2.07	0.00	0.00	-14.90	0.65
7 a	-12.27	1.82	0.00	0.00	-12.30	0.50
8 a	-0.92	-0.47	0.00	0.00	-0.44	0.44
8 b	-0.42	-0.09	0.00	0.00	-0.38	0.46
11 top	-7.30	-4.04	0.00	0.00	-12.85	-5.91
11 a	-6.67	-3.50	0.00	0.00	-11.01	-5.22
11 b	-4.45	-1.51	0.00	0.00	-5.43	-2.81
12 top	3.66	-3.54	0.00	0.00	-13.02	-1.13
12 a	3.46	-3.04	0.00	0.00	-11.39	-0.98
12 b	2.73	-1.21	0.00	0.00	-6.13	-0.41
13 top	1.60	-3.78	0.00	0.00	-8.81	-1.91
13 a	1.26	-3.27	0.00	0.00	-7.69	-1.71
13 b	0.08	-1.36	0.00	0.00	-4.05	-0.99
14 top	-1.60	-3.78	0.00	0.00	-10.80	-1.53
14 a	-1.26	-3.27	0.00	0.00	-9.45	-1.34
14 b	-0.08	-1.36	0.00	0.00	-5.17	-0.66
15 top	-3.66	-3.54	0.00	0.00	-6.66	-1.86
15 a	-3.46	-3.04	0.00	0.00	-5.80	-1.41
15 b	-2.73	-1.21	0.00	0.00	-3.06	-0.79
16 top	7.30	-4.04	0.00	0.00	-6.11	-2.19
16 a	6.67	-3.50	0.00	0.00	-5.31	-1.94
16 b	4.45	-1.51	0.00	0.00	-2.93	-1.03

VEH: S2 - SPECIAL TR BRUG(5.75.44) page 61
date 10/09/2009; time 10:51:54
Cline Avenue - Load Rating - Triple Box - 6 Webs - 111'-4" W

Summary of the results (Maximum)

Section	--- Deadload ----		----- P.T. ------		--- Live load ---	
	Moment	Ax.Frc	Moment	Ax.Frc	Moment	Ax.Frc
1 a	-3.85	0.45	0.00	0.00	0.75	0.08
1 b	-12.27	1.82	0.00	0.00	-0.01	0.02
1 right	-13.64	2.07	0.00	0.00	-0.01	0.02
2 left	-6.34	2.82	0.00	0.00	0.04	0.01
2 a	-5.43	2.62	0.00	0.00	0.69	1.57
2 b	-0.74	1.59	0.00	0.00	3.92	-0.19
2 c	-0.18	1.48	0.00	0.00	4.25	-0.91
2 right	-5.10	2.61	0.00	0.00	2.17	0.75
3 left	-8.76	2.37	0.00	0.00	8.47	0.71
3 a	-7.59	2.13	0.00	0.00	8.53	0.56
3 b	-0.70	0.83	0.00	0.00	6.74	-0.05
3 c	1.77	0.52	0.00	0.00	4.99	0.02
3 right	-5.39	2.55	0.00	0.00	5.78	1.23
4 left	-6.99	2.15	0.00	0.00	1.63	1.42
4 a	-5.84	1.96	0.00	0.00	2.56	1.01
4 b	0.91	1.00	0.00	0.00	4.56	-0.10
4 c	2.45	0.92	0.00	0.00	4.49	-0.49
4 right	-6.99	2.15	0.00	0.00	1.63	1.42
5 left	-5.39	2.56	0.00	0.00	5.78	1.23
5 a	-4.41	2.31	0.00	0.00	5.98	1.08
5 b	0.88	0.93	0.00	0.00	5.51	0.39
5 c	1.77	0.52	0.00	0.00	4.99	0.02
5 right	-8.76	2.37	0.00	0.00	8.47	0.71
6 left	-5.10	2.61	0.00	0.00	2.17	0.75
6 a	-4.28	2.43	0.00	0.00	3.04	0.29
6 b	-0.39	1.53	0.00	0.00	4.56	-0.64
6 c	-0.18	1.48	0.00	0.00	4.25	-0.91
6 right	-6.34	2.82	0.00	0.00	0.04	0.01
7 left	-13.64	2.07	0.00	0.00	-0.01	0.02
7 a	-12.27	1.82	0.00	0.00	-0.01	0.02
8 a	-0.92	-0.47	0.00	0.00	1.38	-1.53
8 b	-0.42	-0.09	0.00	0.00	1.16	-1.23
11 top	-7.30	-4.04	0.00	0.00	5.98	-1.93
11 a	-6.67	-3.50	0.00	0.00	5.23	-1.71
11 b	-4.45	-1.51	0.00	0.00	2.92	-0.93
12 top	3.66	-3.54	0.00	0.00	6.60	-1.50
12 a	3.46	-3.04	0.00	0.00	5.77	-1.34
12 b	2.73	-1.21	0.00	0.00	3.05	-0.76
13 top	1.60	-3.78	0.00	0.00	10.61	-1.28
13 a	1.26	-3.27	0.00	0.00	9.33	-1.13
13 b	0.08	-1.36	0.00	0.00	5.14	-0.56
14 top	-1.60	-3.78	0.00	0.00	8.74	-1.83
14 a	-1.26	-3.27	0.00	0.00	7.64	-1.64
14 b	-0.08	-1.36	0.00	0.00	4.03	-0.96
15 top	-3.66	-3.54	0.00	0.00	12.81	-0.89
15 a	-3.46	-3.04	0.00	0.00	11.25	-0.77
15 b	-2.73	-1.21	0.00	0.00	6.09	-0.32
16 top	7.30	-4.04	0.00	0.00	12.57	-5.25
16 a	6.67	-3.50	0.00	0.00	10.82	-4.61
16 b	4.45	-1.51	0.00	0.00	5.40	-2.46

VEH: S2 - SPECIAL TR BRUG(5.75.44) page 62
date 10/09/2009; time 10:51:54
Cline Avenue - Load Rating - Triple Box - 6 Webs - 111'-4" W

Summary of the results (Minimum)

Section	--- Deadload ----		----- P.T. ------		--- Live load ---	
	Moment	Ax.Frc	Moment	Ax.Frc	Moment	Ax.Frc
1 a	-3.85	0.45	0.00	0.00	-2.13	0.07
1 b	-12.27	1.82	0.00	0.00	-11.96	0.48
1 right	-13.64	2.07	0.00	0.00	-14.37	0.62
2 left	-6.34	2.82	0.00	0.00	-7.02	-0.33
2 a	-5.43	2.62	0.00	0.00	-6.21	-0.40
2 b	-0.74	1.59	0.00	0.00	-0.28	0.84
2 c	-0.18	1.48	0.00	0.00	-0.26	0.40
2 right	-5.10	2.61	0.00	0.00	-5.32	-1.22
3 left	-8.76	2.37	0.00	0.00	-8.27	0.22
3 a	-7.59	2.13	0.00	0.00	-7.68	0.19
3 b	-0.70	0.83	0.00	0.00	-3.08	0.18
3 c	1.77	0.52	0.00	0.00	-0.28	-0.01
3 right	-5.39	2.55	0.00	0.00	-10.93	0.03
4 left	-6.99	2.15	0.00	0.00	-5.94	-0.41
4 a	-5.84	1.96	0.00	0.00	-5.21	-0.45
4 b	0.91	1.00	0.00	0.00	-0.88	0.36
4 c	2.45	0.92	0.00	0.00	-0.54	0.15
4 right	-6.99	2.15	0.00	0.00	-5.94	-0.41
5 left	-5.39	2.56	0.00	0.00	-10.93	0.03
5 a	-4.41	2.31	0.00	0.00	-10.20	0.00
5 b	0.88	0.93	0.00	0.00	-4.39	-0.24
5 c	1.77	0.52	0.00	0.00	-0.28	-0.01
5 right	-8.76	2.37	0.00	0.00	-8.27	0.22
6 left	-5.10	2.61	0.00	0.00	-5.32	-1.22
6 a	-4.28	2.43	0.00	0.00	-4.66	-1.23
6 b	-0.39	1.53	0.00	0.00	-0.75	0.60
6 c	-0.18	1.48	0.00	0.00	-0.26	0.40
6 right	-6.34	2.82	0.00	0.00	-7.02	-0.33
7 left	-13.64	2.07	0.00	0.00	-14.38	0.62
7 a	-12.27	1.82	0.00	0.00	-11.96	0.48
8 a	-0.92	-0.47	0.00	0.00	-0.42	0.43
8 b	-0.42	-0.09	0.00	0.00	-0.37	0.45
11 top	-7.30	-4.04	0.00	0.00	-12.57	-5.25
11 a	-6.67	-3.50	0.00	0.00	-10.82	-4.61
11 b	-4.45	-1.51	0.00	0.00	-5.40	-2.46
12 top	3.66	-3.54	0.00	0.00	-12.81	-0.89
12 a	3.46	-3.04	0.00	0.00	-11.25	-0.77
12 b	2.73	-1.21	0.00	0.00	-6.09	-0.32
13 top	1.60	-3.78	0.00	0.00	-8.74	-1.83
13 a	1.26	-3.27	0.00	0.00	-7.65	-1.64
13 b	0.08	-1.36	0.00	0.00	-4.03	-0.96
14 top	-1.60	-3.78	0.00	0.00	-10.61	-1.28
14 a	-1.26	-3.27	0.00	0.00	-9.33	-1.13
14 b	-0.08	-1.36	0.00	0.00	-5.14	-0.56
15 top	-3.66	-3.54	0.00	0.00	-6.60	-1.50
15 a	-3.46	-3.04	0.00	0.00	-5.77	-1.34
15 b	-2.73	-1.21	0.00	0.00	-3.05	-0.76
16 top	7.30	-4.04	0.00	0.00	-5.98	-1.93
16 a	6.67	-3.50	0.00	0.00	-5.23	-1.71
16 b	4.45	-1.51	0.00	0.00	-2.92	-0.93

VEH: S3 - SPECIAL TR BRUG(5.75.44) page 61
date 10/09/2009; time 10:51:55
Cline Avenue - Load Rating - Triple Box - 6 Webs - 111'-4" W

Summary of the results (Maximum)

Section	--- Deadload ----		----- P.T. ------		--- Live load ---	
	Moment	Ax.Frc	Moment	Ax.Frc	Moment	Ax.Frc
1 a	-3.85	0.45	0.00	0.00	0.71	0.13
1 b	-12.27	1.82	0.00	0.00	-0.01	0.02
1 right	-13.64	2.07	0.00	0.00	-0.01	0.02
2 left	-6.34	2.82	0.00	0.00	0.05	0.01
2 a	-5.43	2.62	0.00	0.00	1.23	2.09
2 b	-0.74	1.59	0.00	0.00	4.96	-0.20
2 c	-0.18	1.48	0.00	0.00	5.36	-1.16
2 right	-5.10	2.61	0.00	0.00	3.34	0.77
3 left	-8.76	2.37	0.00	0.00	11.11	0.90
3 a	-7.59	2.13	0.00	0.00	11.03	0.74
3 b	-0.70	0.83	0.00	0.00	8.53	-0.02
3 c	1.77	0.52	0.00	0.00	6.25	0.04
3 right	-5.39	2.55	0.00	0.00	7.70	1.65
4 left	-6.99	2.15	0.00	0.00	2.66	1.94
4 a	-5.84	1.96	0.00	0.00	3.65	1.44
4 b	0.91	1.00	0.00	0.00	5.79	0.03
4 c	2.45	0.92	0.00	0.00	5.66	-0.51
4 right	-6.99	2.15	0.00	0.00	2.66	1.94
5 left	-5.39	2.56	0.00	0.00	7.70	1.65
5 a	-4.41	2.31	0.00	0.00	7.82	1.48
5 b	0.88	0.93	0.00	0.00	6.98	0.60
5 c	1.77	0.52	0.00	0.00	6.25	0.04
5 right	-8.76	2.37	0.00	0.00	11.11	0.90
6 left	-5.10	2.61	0.00	0.00	3.34	0.77
6 a	-4.28	2.43	0.00	0.00	4.25	0.47
6 b	-0.39	1.53	0.00	0.00	5.79	-0.74
6 c	-0.18	1.48	0.00	0.00	5.36	-1.16
6 right	-6.34	2.82	0.00	0.00	0.05	0.01
7 left	-13.64	2.07	0.00	0.00	-0.01	0.02
7 a	-12.27	1.82	0.00	0.00	-0.01	0.02
8 a	-0.92	-0.47	0.00	0.00	1.86	-2.11
8 b	-0.42	-0.09	0.00	0.00	1.57	-1.72
11 top	-7.30	-4.04	0.00	0.00	8.06	-2.31
11 a	-6.67	-3.50	0.00	0.00	7.11	-2.05
11 b	-4.45	-1.51	0.00	0.00	4.03	-1.12
12 top	3.66	-3.54	0.00	0.00	8.97	-2.11
12 a	3.46	-3.04	0.00	0.00	7.85	-1.88
12 b	2.73	-1.21	0.00	0.00	4.20	-0.95
13 top	1.60	-3.78	0.00	0.00	13.89	-1.49
13 a	1.26	-3.27	0.00	0.00	12.26	-1.31
13 b	0.08	-1.36	0.00	0.00	6.81	-0.65
14 top	-1.60	-3.78	0.00	0.00	11.65	-2.53
14 a	-1.26	-3.27	0.00	0.00	10.21	-2.05
14 b	-0.08	-1.36	0.00	0.00	5.42	-1.20
15 top	-3.66	-3.54	0.00	0.00	16.68	-1.00
15 a	-3.46	-3.04	0.00	0.00	14.70	-0.85
15 b	-2.73	-1.21	0.00	0.00	8.02	-0.35
16 top	7.30	-4.04	0.00	0.00	17.04	-6.08
16 a	6.67	-3.50	0.00	0.00	14.78	-5.35
16 b	4.45	-1.51	0.00	0.00	7.53	-2.90

VEH: S3 - SPECIAL TR BRUG(5.75.44) page 62
date 10/09/2009; time 10:51:55
Cline Avenue - Load Rating - Triple Box - 6 Webs - 111'-4" W

Summary of the results (Minimum)

Section	--- Deadload ----		----- P.T. ------		--- Live load ---	
	Moment	Ax.Frc	Moment	Ax.Frc	Moment	Ax.Frc
1 a	-3.85	0.45	0.00	0.00	-3.11	0.12
1 b	-12.27	1.82	0.00	0.00	-15.89	0.65
1 right	-13.64	2.07	0.00	0.00	-18.87	0.81
2 left	-6.34	2.82	0.00	0.00	-9.05	-0.46
2 a	-5.43	2.62	0.00	0.00	-7.98	-0.55
2 b	-0.74	1.59	0.00	0.00	-0.45	1.23
2 c	-0.18	1.48	0.00	0.00	-0.46	0.63
2 right	-5.10	2.61	0.00	0.00	-6.96	-1.58
3 left	-8.76	2.37	0.00	0.00	-11.00	0.29
3 a	-7.59	2.13	0.00	0.00	-10.19	0.25
3 b	-0.70	0.83	0.00	0.00	-3.98	0.25
3 c	1.77	0.52	0.00	0.00	-0.34	-0.02
3 right	-5.39	2.55	0.00	0.00	-14.36	0.02
4 left	-6.99	2.15	0.00	0.00	-7.73	-0.44
4 a	-5.84	1.96	0.00	0.00	-6.75	-0.48
4 b	0.91	1.00	0.00	0.00	-1.15	0.42
4 c	2.45	0.92	0.00	0.00	-0.71	0.21
4 right	-6.99	2.15	0.00	0.00	-7.73	-0.44
5 left	-5.39	2.56	0.00	0.00	-14.35	0.02
5 a	-4.41	2.31	0.00	0.00	-13.37	-0.02
5 b	0.88	0.93	0.00	0.00	-5.64	-0.34
5 c	1.77	0.52	0.00	0.00	-0.34	-0.02
5 right	-8.76	2.37	0.00	0.00	-11.00	0.29
6 left	-5.10	2.61	0.00	0.00	-6.96	-1.58
6 a	-4.28	2.43	0.00	0.00	-6.07	-1.58
6 b	-0.39	1.53	0.00	0.00	-1.01	0.79
6 c	-0.18	1.48	0.00	0.00	-0.46	0.63
6 right	-6.34	2.82	0.00	0.00	-9.06	-0.46
7 left	-13.64	2.07	0.00	0.00	-18.87	0.81
7 a	-12.27	1.82	0.00	0.00	-15.90	0.65
8 a	-0.92	-0.47	0.00	0.00	-0.63	0.60
8 b	-0.42	-0.09	0.00	0.00	-0.54	0.62
11 top	-7.30	-4.04	0.00	0.00	-17.04	-6.08
11 a	-6.67	-3.50	0.00	0.00	-14.78	-5.35
11 b	-4.45	-1.51	0.00	0.00	-7.52	-2.90
12 top	3.66	-3.54	0.00	0.00	-16.68	-1.00
12 a	3.46	-3.04	0.00	0.00	-14.70	-0.85
12 b	2.73	-1.21	0.00	0.00	-8.02	-0.35
13 top	1.60	-3.78	0.00	0.00	-11.65	-2.53
13 a	1.26	-3.27	0.00	0.00	-10.21	-2.05
13 b	0.08	-1.36	0.00	0.00	-5.43	-1.20
14 top	-1.60	-3.78	0.00	0.00	-13.89	-1.49
14 a	-1.26	-3.27	0.00	0.00	-12.26	-1.31
14 b	-0.08	-1.36	0.00	0.00	-6.81	-0.65
15 top	-3.66	-3.54	0.00	0.00	-8.97	-2.11
15 a	-3.46	-3.04	0.00	0.00	-7.85	-1.88
15 b	-2.73	-1.21	0.00	0.00	-4.20	-0.95
16 top	7.30	-4.04	0.00	0.00	-8.06	-2.31
16 a	6.67	-3.50	0.00	0.00	-7.11	-2.05
16 b	4.45	-1.51	0.00	0.00	-4.03	-1.12

VEH: S4 - SUPER LOAD BRUG(5.75.44) page 61
date 10/09/2009; time 10:51:55
Cline Avenue - Load Rating - Triple Box - 6 Webs - 111'-4" W

Summary of the results (Maximum)

Section	--- Deadload ---- Moment	Ax.Frc	----- P.T. ------ Moment	Ax.Frc	--- Live load --- Moment	Ax.Frc
1 a	-3.85	0.45	0.00	0.00	0.48	0.06
1 b	-12.27	1.82	0.00	0.00	-0.01	0.02
1 right	-13.64	2.07	0.00	0.00	-0.01	0.02
2 left	-6.34	2.82	0.00	0.00	0.27	1.68
2 a	-5.43	2.62	0.00	0.00	1.19	1.37
2 b	-0.74	1.59	0.00	0.00	3.44	-0.20
2 c	-0.18	1.48	0.00	0.00	3.65	-0.89
2 right	-5.10	2.61	0.00	0.00	2.86	0.27
3 left	-8.76	2.37	0.00	0.00	9.23	0.44
3 a	-7.59	2.13	0.00	0.00	9.11	0.35
3 b	-0.70	0.83	0.00	0.00	6.44	-0.06
3 c	1.77	0.52	0.00	0.00	4.14	0.08
3 right	-5.39	2.55	0.00	0.00	6.43	1.02
4 left	-6.99	2.15	0.00	0.00	2.30	1.02
4 a	-5.84	1.96	0.00	0.00	2.97	0.82
4 b	0.91	1.00	0.00	0.00	4.10	-0.11
4 c	2.45	0.92	0.00	0.00	3.90	-0.45
4 right	-6.99	2.15	0.00	0.00	2.30	1.02
5 left	-5.39	2.56	0.00	0.00	6.43	1.02
5 a	-4.41	2.31	0.00	0.00	6.47	0.92
5 b	0.88	0.93	0.00	0.00	5.16	0.40
5 c	1.77	0.52	0.00	0.00	4.14	0.08
5 right	-8.76	2.37	0.00	0.00	9.23	0.44
6 left	-5.10	2.61	0.00	0.00	2.86	0.27
6 a	-4.28	2.43	0.00	0.00	3.46	0.07
6 b	-0.39	1.53	0.00	0.00	4.10	-0.67
6 c	-0.18	1.48	0.00	0.00	3.65	-0.89
6 right	-6.34	2.82	0.00	0.00	0.27	1.68
7 left	-13.64	2.07	0.00	0.00	-0.01	0.02
7 a	-12.27	1.82	0.00	0.00	-0.01	0.02
8 a	-0.92	-0.47	0.00	0.00	1.36	-1.43
8 b	-0.42	-0.09	0.00	0.00	1.16	-1.17
11 top	-7.30	-4.04	0.00	0.00	5.46	-1.60
11 a	-6.67	-3.50	0.00	0.00	4.82	-1.42
11 b	-4.45	-1.51	0.00	0.00	2.76	-0.76
12 top	3.66	-3.54	0.00	0.00	6.07	-1.31
12 a	3.46	-3.04	0.00	0.00	5.34	-0.86
12 b	2.73	-1.21	0.00	0.00	2.93	-0.50
13 top	1.60	-3.78	0.00	0.00	10.27	-0.91
13 a	1.26	-3.27	0.00	0.00	9.07	-0.79
13 b	0.08	-1.36	0.00	0.00	5.07	-0.38
14 top	-1.60	-3.78	0.00	0.00	8.30	-1.30
14 a	-1.26	-3.27	0.00	0.00	7.33	-1.17
14 b	-0.08	-1.36	0.00	0.00	3.97	-0.71
15 top	-3.66	-3.54	0.00	0.00	12.56	-0.51
15 a	-3.46	-3.04	0.00	0.00	11.06	-0.42
15 b	-2.73	-1.21	0.00	0.00	6.05	-0.12
16 top	7.30	-4.04	0.00	0.00	11.56	-4.09
16 a	6.67	-3.50	0.00	0.00	10.02	-3.63
16 b	4.45	-1.51	0.00	0.00	5.08	-1.99

VEH: S4 - SUPER LOAD BRUG(5.75.44) page 62
date 10/09/2009; time 10:51:55
Cline Avenue - Load Rating - Triple Box - 6 Webs - 111'-4" W

Summary of the results (Minimum)

Section	--- Deadload ---- Moment	Ax.Frc	----- P.T. ------ Moment	Ax.Frc	--- Live load --- Moment	Ax.Frc
1 a	-3.85	0.45	0.00	0.00	-1.99	0.05
1 b	-12.27	1.82	0.00	0.00	-10.30	0.36
1 right	-13.64	2.07	0.00	0.00	-12.26	0.46
2 left	-6.34	2.82	0.00	0.00	-6.01	-0.35
2 a	-5.43	2.62	0.00	0.00	-5.28	-0.41
2 b	-0.74	1.59	0.00	0.00	-0.15	0.05
2 c	-0.18	1.48	0.00	0.00	-0.23	0.08
2 right	-5.10	2.61	0.00	0.00	-4.23	-1.28
3 left	-8.76	2.37	0.00	0.00	-7.31	0.24
3 a	-7.59	2.13	0.00	0.00	-6.85	0.23
3 b	-0.70	0.83	0.00	0.00	-3.14	0.29
3 c	1.77	0.52	0.00	0.00	-0.29	0.00
3 right	-5.39	2.55	0.00	0.00	-10.12	-0.12
4 left	-6.99	2.15	0.00	0.00	-4.88	-0.44
4 a	-5.84	1.96	0.00	0.00	-4.23	-0.46
4 b	0.91	1.00	0.00	0.00	-0.90	0.30
4 c	2.45	0.92	0.00	0.00	-0.55	0.11
4 right	-6.99	2.15	0.00	0.00	-4.88	-0.44
5 left	-5.39	2.56	0.00	0.00	-10.11	-0.12
5 a	-4.41	2.31	0.00	0.00	-9.51	-0.13
5 b	0.88	0.93	0.00	0.00	-4.55	-0.24
5 c	1.77	0.52	0.00	0.00	-0.29	0.00
5 right	-8.76	2.37	0.00	0.00	-7.31	0.24
6 left	-5.10	2.61	0.00	0.00	-4.23	-1.28
6 a	-4.28	2.43	0.00	0.00	-3.67	-1.27
6 b	-0.39	1.53	0.00	0.00	-0.75	0.62
6 c	-0.18	1.48	0.00	0.00	-0.23	0.08
6 right	-6.34	2.82	0.00	0.00	-6.01	-0.35
7 left	-13.64	2.07	0.00	0.00	-12.26	0.46
7 a	-12.27	1.82	0.00	0.00	-10.30	0.36
8 a	-0.92	-0.47	0.00	0.00	-0.42	0.44
8 b	-0.42	-0.09	0.00	0.00	-0.37	0.46
11 top	-7.30	-4.04	0.00	0.00	-11.56	-4.09
11 a	-6.67	-3.50	0.00	0.00	-10.02	-3.63
11 b	-4.45	-1.51	0.00	0.00	-5.08	-1.99
12 top	3.66	-3.54	0.00	0.00	-12.56	-0.51
12 a	3.46	-3.04	0.00	0.00	-11.06	-0.42
12 b	2.73	-1.21	0.00	0.00	-6.05	-0.12
13 top	1.60	-3.78	0.00	0.00	-8.30	-1.30
13 a	1.26	-3.27	0.00	0.00	-7.33	-1.17
13 b	0.08	-1.36	0.00	0.00	-3.97	-0.71
14 top	-1.60	-3.78	0.00	0.00	-10.27	-0.91
14 a	-1.26	-3.27	0.00	0.00	-9.07	-0.79
14 b	-0.08	-1.36	0.00	0.00	-5.07	-0.38
15 top	-3.66	-3.54	0.00	0.00	-6.07	-1.31
15 a	-3.46	-3.04	0.00	0.00	-5.34	-0.86
15 b	-2.73	-1.21	0.00	0.00	-2.93	-0.50
16 top	7.30	-4.04	0.00	0.00	-5.46	-1.60
16 a	6.67	-3.50	0.00	0.00	-4.82	-1.42
16 b	4.45	-1.51	0.00	0.00	-2.76	-0.76

VEH: S5 - SUPERLOAD BRUG(5.75.44) page 61
date 10/09/2009; time 10:51:56
Cline Avenue - Load Rating - Triple Box - 6 Webs - 111'-4" W

Summary of the results (Maximum)

Section	--- Deadload ---		----- P.T. ------		--- Live load ---	
	Moment	Ax.Frc	Moment	Ax.Frc	Moment	Ax.Frc
1 a	-3.85	0.45	0.00	0.00	0.85	0.09
1 b	-12.27	1.82	0.00	0.00	-0.01	0.02
1 right	-13.64	2.07	0.00	0.00	-0.01	0.03
2 left	-6.34	2.82	0.00	0.00	0.05	0.02
2 a	-5.43	2.62	0.00	0.00	0.99	1.86
2 b	-0.74	1.59	0.00	0.00	4.70	-0.26
2 c	-0.18	1.48	0.00	0.00	5.09	-1.17
2 right	-5.10	2.61	0.00	0.00	2.94	0.75
3 left	-8.76	2.37	0.00	0.00	11.25	0.76
3 a	-7.59	2.13	0.00	0.00	11.23	0.59
3 b	-0.70	0.83	0.00	0.00	8.45	-0.10
3 c	1.77	0.52	0.00	0.00	5.91	0.04
3 right	-5.39	2.55	0.00	0.00	7.71	1.40
4 left	-6.99	2.15	0.00	0.00	2.24	1.61
4 a	-5.84	1.96	0.00	0.00	3.32	1.10
4 b	0.91	1.00	0.00	0.00	5.53	-0.21
4 c	2.45	0.92	0.00	0.00	5.41	-0.67
4 right	-6.99	2.15	0.00	0.00	2.24	1.61
5 left	-5.39	2.56	0.00	0.00	7.71	1.40
5 a	-4.41	2.31	0.00	0.00	7.89	1.23
5 b	0.88	0.93	0.00	0.00	6.83	0.45
5 c	1.77	0.52	0.00	0.00	5.91	0.04
5 right	-8.76	2.37	0.00	0.00	11.25	0.76
6 left	-5.10	2.61	0.00	0.00	2.94	0.75
6 a	-4.28	2.43	0.00	0.00	3.95	0.19
6 b	-0.39	1.53	0.00	0.00	5.53	-0.87
6 c	-0.18	1.48	0.00	0.00	5.09	-1.17
6 right	-6.34	2.82	0.00	0.00	0.05	0.02
7 left	-13.64	2.07	0.00	0.00	-0.01	0.03
7 a	-12.27	1.82	0.00	0.00	-0.01	0.02
8 a	-0.92	-0.47	0.00	0.00	1.71	-1.85
8 b	-0.42	-0.09	0.00	0.00	1.44	-1.48
11 top	-7.30	-4.04	0.00	0.00	7.19	-2.28
11 a	-6.67	-3.50	0.00	0.00	6.31	-2.02
11 b	-4.45	-1.51	0.00	0.00	3.56	-1.09
12 top	3.66	-3.54	0.00	0.00	8.06	-1.77
12 a	3.46	-3.04	0.00	0.00	7.05	-1.59
12 b	2.73	-1.21	0.00	0.00	3.69	-0.68
13 top	1.60	-3.78	0.00	0.00	13.28	-1.42
13 a	1.26	-3.27	0.00	0.00	11.69	-1.24
13 b	0.08	-1.36	0.00	0.00	6.47	-0.61
14 top	-1.60	-3.78	0.00	0.00	10.87	-2.20
14 a	-1.26	-3.27	0.00	0.00	9.52	-1.98
14 b	-0.08	-1.36	0.00	0.00	5.00	-0.93
15 top	-3.66	-3.54	0.00	0.00	16.15	-0.90
15 a	-3.46	-3.04	0.00	0.00	14.20	-0.77
15 b	-2.73	-1.21	0.00	0.00	7.71	-0.30
16 top	7.30	-4.04	0.00	0.00	15.11	-6.10
16 a	6.67	-3.50	0.00	0.00	13.03	-5.36
16 b	4.45	-1.51	0.00	0.00	6.51	-2.88

VEH: S5 - SUPERLOAD BRUG(5.75.44) page 62
date 10/09/2009; time 10:51:56
Cline Avenue - Load Rating - Triple Box - 6 Webs - 111'-4" W

Summary of the results (Minimum)

Section	--- Deadload ---		----- P.T. ------		--- Live load ---	
	Moment	Ax.Frc	Moment	Ax.Frc	Moment	Ax.Frc
1 a	-3.85	0.45	0.00	0.00	-2.57	0.07
1 b	-12.27	1.82	0.00	0.00	-14.19	0.55
1 right	-13.64	2.07	0.00	0.00	-17.01	0.70
2 left	-6.34	2.82	0.00	0.00	-8.35	-0.42
2 a	-5.43	2.62	0.00	0.00	-7.37	-0.51
2 b	-0.74	1.59	0.00	0.00	-0.25	0.98
2 c	-0.18	1.48	0.00	0.00	-0.29	0.10
2 right	-5.10	2.61	0.00	0.00	-6.10	-1.60
3 left	-8.76	2.37	0.00	0.00	-9.99	0.28
3 a	-7.59	2.13	0.00	0.00	-9.28	0.24
3 b	-0.70	0.83	0.00	0.00	-3.91	0.32
3 c	1.77	0.52	0.00	0.00	-0.37	0.01
3 right	-5.39	2.55	0.00	0.00	-13.47	0.04
4 left	-6.99	2.15	0.00	0.00	-6.92	-0.60
4 a	-5.84	1.96	0.00	0.00	-6.05	-0.63
4 b	0.91	1.00	0.00	0.00	-1.12	0.40
4 c	2.45	0.92	0.00	0.00	-0.69	0.16
4 right	-6.99	2.15	0.00	0.00	-6.92	-0.60
5 left	-5.39	2.56	0.00	0.00	-13.47	0.04
5 a	-4.41	2.31	0.00	0.00	-12.57	0.00
5 b	0.88	0.93	0.00	0.00	-5.68	-0.30
5 c	1.77	0.52	0.00	0.00	-0.37	0.01
5 right	-8.76	2.37	0.00	0.00	-9.99	0.28
6 left	-5.10	2.61	0.00	0.00	-6.10	-1.60
6 a	-4.28	2.43	0.00	0.00	-5.33	-1.59
6 b	-0.39	1.53	0.00	0.00	-0.96	0.78
6 c	-0.18	1.48	0.00	0.00	-0.29	0.10
6 right	-6.34	2.82	0.00	0.00	-8.35	-0.42
7 left	-13.64	2.07	0.00	0.00	-17.02	0.70
7 a	-12.27	1.82	0.00	0.00	-14.19	0.55
8 a	-0.92	-0.47	0.00	0.00	-0.50	0.53
8 b	-0.42	-0.09	0.00	0.00	-0.44	0.56
11 top	-7.30	-4.04	0.00	0.00	-15.11	-6.10
11 a	-6.67	-3.50	0.00	0.00	-13.02	-5.36
11 b	-4.45	-1.51	0.00	0.00	-6.51	-2.88
12 top	3.66	-3.54	0.00	0.00	-16.15	-0.90
12 a	3.46	-3.04	0.00	0.00	-14.20	-0.77
12 b	2.73	-1.21	0.00	0.00	-7.71	-0.30
13 top	1.60	-3.78	0.00	0.00	-10.87	-2.20
13 a	1.26	-3.27	0.00	0.00	-9.52	-1.98
13 b	0.08	-1.36	0.00	0.00	-5.00	-0.93
14 top	-1.60	-3.78	0.00	0.00	-13.28	-1.42
14 a	-1.26	-3.27	0.00	0.00	-11.69	-1.24
14 b	-0.08	-1.36	0.00	0.00	-6.47	-0.61
15 top	-3.66	-3.54	0.00	0.00	-8.06	-1.77
15 a	-3.46	-3.04	0.00	0.00	-7.05	-1.59
15 b	-2.73	-1.21	0.00	0.00	-3.69	-0.68
16 top	7.30	-4.04	0.00	0.00	-7.19	-2.28
16 a	6.67	-3.50	0.00	0.00	-6.31	-2.02
16 b	4.45	-1.51	0.00	0.00	-3.56	-1.09

PtBridge, Inc. BRUG(5.75.44) page 61
date 10/09/2009; time 10:51:58
Cline Avenue - Load Rating - Triple Box - 6 Webs - 111'-4" W

Summary of the results (Maximum)

Section	--- Deadload ---- Moment	Ax.Frc	----- P.T. ------ Moment	Ax.Frc	--- Live load --- Moment	Ax.Frc
1 a	-3.85	0.45	0.00	0.00	1.57	0.05
1 b	-12.27	1.82	0.00	0.00	0.74	0.28
1 right	-13.64	2.07	0.00	0.00	0.43	0.43
2 left	-6.34	2.82	0.00	0.00	1.03	0.45
2 a	-5.43	2.62	0.00	0.00	1.66	0.47
2 b	-0.74	1.59	0.00	0.00	4.49	-0.35
2 c	-0.18	1.48	0.00	0.00	5.01	-0.64
2 right	-5.10	2.61	0.00	0.00	2.05	0.62
3 left	-8.76	2.37	0.00	0.00	6.00	1.40
3 a	-7.59	2.13	0.00	0.00	7.02	1.06
3 b	-0.70	0.83	0.00	0.00	6.51	0.09
3 c	1.77	0.52	0.00	0.00	7.21	-0.05
3 right	-5.39	2.55	0.00	0.00	3.97	1.54
4 left	-6.99	2.15	0.00	0.00	1.77	0.63
4 a	-5.84	1.96	0.00	0.00	2.29	1.22
4 b	0.91	1.00	0.00	0.00	4.83	0.28
4 c	2.45	0.92	0.00	0.00	5.22	0.01
4 right	-6.99	2.15	0.00	0.00	1.77	0.63
5 left	-5.39	2.56	0.00	0.00	3.97	1.54
5 a	-4.41	2.31	0.00	0.00	4.58	1.56
5 b	0.88	0.93	0.00	0.00	5.73	0.47
5 c	1.77	0.52	0.00	0.00	7.21	-0.05
5 right	-8.76	2.37	0.00	0.00	6.58	1.36
6 left	-5.10	2.61	0.00	0.00	2.05	0.62
6 a	-4.28	2.43	0.00	0.00	2.49	0.83
6 b	-0.39	1.53	0.00	0.00	4.82	-0.22
6 c	-0.18	1.48	0.00	0.00	5.01	-0.64
6 right	-6.34	2.82	0.00	0.00	0.96	0.42
7 left	-13.64	2.07	0.00	0.00	0.43	0.43
7 a	-12.27	1.82	0.00	0.00	0.67	0.18
8 a	-0.92	-0.47	0.00	0.00	1.14	-0.86
8 b	-0.42	-0.09	0.00	0.00	0.95	-0.52
11 top	-7.30	-4.04	0.00	0.00	6.62	-5.27
11 a	-6.67	-3.50	0.00	0.00	5.58	-4.45
11 b	-4.45	-1.51	0.00	0.00	2.94	-1.99
12 top	3.66	-3.54	0.00	0.00	9.09	-3.95
12 a	3.46	-3.04	0.00	0.00	7.73	-3.42
12 b	2.73	-1.21	0.00	0.00	3.91	-1.70
13 top	1.60	-3.78	0.00	0.00	10.55	-4.78
13 a	1.26	-3.27	0.00	0.00	9.04	-4.00
13 b	0.08	-1.36	0.00	0.00	4.80	-1.69
14 top	-1.60	-3.78	0.00	0.00	10.88	-4.24
14 a	-1.26	-3.27	0.00	0.00	9.30	-3.68
14 b	-0.08	-1.36	0.00	0.00	4.72	-1.87
15 top	-3.66	-3.54	0.00	0.00	12.39	-4.42
15 a	-3.46	-3.04	0.00	0.00	10.65	-3.67
15 b	-2.73	-1.21	0.00	0.00	5.58	-1.47
16 top	7.30	-4.04	0.00	0.00	10.22	-6.98
16 a	6.67	-3.50	0.00	0.00	8.56	-5.90
16 b	4.45	-1.51	0.00	0.00	4.18	-2.69

PtBridge, Inc. BRUG(5.75.44) page 62
date 10/09/2009; time 10:51:58
Cline Avenue - Load Rating - Triple Box - 6 Webs - 111'-4" W

Summary of the results (Minimum)

Section	--- Deadload ---- Moment	Ax.Frc	----- P.T. ------ Moment	Ax.Frc	--- Live load --- Moment	Ax.Frc
1 a	-3.85	0.45	0.00	0.00	-1.32	0.10
1 b	-12.27	1.82	0.00	0.00	-11.77	0.89
1 right	-13.64	2.07	0.00	0.00	-14.65	1.45
2 left	-6.34	2.82	0.00	0.00	-9.47	1.51
2 a	-5.43	2.62	0.00	0.00	-7.25	-0.31
2 b	-0.74	1.59	0.00	0.00	-1.59	0.25
2 c	-0.18	1.48	0.00	0.00	-0.92	0.77
2 right	-5.10	2.61	0.00	0.00	-7.52	-0.61
3 left	-8.76	2.37	0.00	0.00	-11.98	0.47
3 a	-7.59	2.13	0.00	0.00	-10.56	0.32
3 b	-0.70	0.83	0.00	0.00	-3.65	0.12
3 c	1.77	0.52	0.00	0.00	-0.34	0.17
3 right	-5.39	2.55	0.00	0.00	-14.22	0.35
4 left	-6.99	2.15	0.00	0.00	-7.90	1.08
4 a	-5.84	1.96	0.00	0.00	-6.76	0.92
4 b	0.91	1.00	0.00	0.00	-1.23	0.27
4 c	2.45	0.92	0.00	0.00	-0.77	0.43
4 right	-6.99	2.15	0.00	0.00	-7.90	1.08
5 left	-5.39	2.56	0.00	0.00	-14.22	0.35
5 a	-4.41	2.31	0.00	0.00	-12.69	0.18
5 b	0.88	0.93	0.00	0.00	-4.76	-0.32
5 c	1.77	0.52	0.00	0.00	-0.34	0.17
5 right	-8.76	2.37	0.00	0.00	-11.98	0.47
6 left	-5.10	2.61	0.00	0.00	-7.52	-0.61
6 a	-4.28	2.43	0.00	0.00	-6.13	-0.68
6 b	-0.39	1.53	0.00	0.00	-1.22	-0.09
6 c	-0.18	1.48	0.00	0.00	-0.70	0.52
6 right	-6.34	2.82	0.00	0.00	-9.51	1.75
7 left	-13.64	2.07	0.00	0.00	-14.64	1.66
7 a	-12.27	1.82	0.00	0.00	-11.76	1.02
8 a	-0.92	-0.47	0.00	0.00	-0.59	0.39
8 b	-0.42	-0.09	0.00	0.00	-0.50	0.39
11 top	-7.30	-4.04	0.00	0.00	-10.28	-6.93
11 a	-6.67	-3.50	0.00	0.00	-8.63	-5.85
11 b	-4.45	-1.51	0.00	0.00	-4.29	-2.64
12 top	3.66	-3.54	0.00	0.00	-12.39	-4.42
12 a	3.46	-3.04	0.00	0.00	-10.65	-3.67
12 b	2.73	-1.21	0.00	0.00	-5.58	-1.47
13 top	1.60	-3.78	0.00	0.00	-10.88	-4.24
13 a	1.26	-3.27	0.00	0.00	-9.30	-3.68
13 b	0.08	-1.36	0.00	0.00	-4.72	-1.87
14 top	-1.60	-3.78	0.00	0.00	-10.55	-4.78
14 a	-1.26	-3.27	0.00	0.00	-9.04	-4.00
14 b	-0.08	-1.36	0.00	0.00	-4.80	-1.69
15 top	-3.66	-3.54	0.00	0.00	-9.09	-3.95
15 a	-3.46	-3.04	0.00	0.00	-7.73	-3.42
15 b	-2.73	-1.21	0.00	0.00	-3.91	-1.70
16 top	7.30	-4.04	0.00	0.00	-6.62	-5.28
16 a	6.67	-3.50	0.00	0.00	-5.58	-4.45
16 b	4.45	-1.51	0.00	0.00	-2.94	-1.99

VEH: HL93- TANDEM BRUG(5.75.44) page 61
date 10/09/2009; time 10:51:57
Cline Avenue - Load Rating - Triple Box - 6 Webs - 111'-4" W

Summary of the results (Maximum)

Section	--- Deadload ---- Moment	Ax.Frc	----- P.T. ------ Moment	Ax.Frc	--- Live load --- Moment	Ax.Frc
1 a	-3.85	0.45	0.00	0.00	1.15	0.10
1 b	-12.27	1.82	0.00	0.00	0.18	0.08
1 right	-13.64	2.07	0.00	0.00	0.23	0.09
2 left	-6.34	2.82	0.00	0.00	0.22	0.03
2 a	-5.43	2.62	0.00	0.00	0.18	0.05
2 b	-0.74	1.59	0.00	0.00	3.40	-0.15
2 c	-0.18	1.48	0.00	0.00	4.55	-0.57
2 right	-5.10	2.61	0.00	0.00	0.16	-0.26
3 left	-8.76	2.37	0.00	0.00	3.08	0.69
3 a	-7.59	2.13	0.00	0.00	3.30	0.59
3 b	-0.70	0.83	0.00	0.00	5.03	0.07
3 c	1.77	0.52	0.00	0.00	6.64	-0.21
3 right	-5.39	2.55	0.00	0.00	2.73	0.24
4 left	-6.99	2.15	0.00	0.00	0.61	-0.36
4 a	-5.84	1.96	0.00	0.00	0.54	-0.33
4 b	0.91	1.00	0.00	0.00	3.89	0.13
4 c	2.45	0.92	0.00	0.00	4.69	-0.09
4 right	-6.99	2.15	0.00	0.00	0.61	-0.36
5 left	-5.39	2.56	0.00	0.00	2.73	0.24
5 a	-4.41	2.31	0.00	0.00	2.54	0.22
5 b	0.88	0.93	0.00	0.00	4.21	0.38
5 c	1.77	0.52	0.00	0.00	6.64	-0.21
5 right	-8.76	2.37	0.00	0.00	3.61	1.24
6 left	-5.10	2.61	0.00	0.00	0.16	-0.26
6 a	-4.28	2.43	0.00	0.00	0.27	0.80
6 b	-0.39	1.53	0.00	0.00	3.88	-0.38
6 c	-0.18	1.48	0.00	0.00	4.55	-0.57
6 right	-6.34	2.82	0.00	0.00	0.22	0.03
7 left	-13.64	2.07	0.00	0.00	0.23	0.09
7 a	-12.27	1.82	0.00	0.00	0.18	0.08
8 a	-0.92	-0.47	0.00	0.00	0.88	-0.52
8 b	-0.42	-0.09	0.00	0.00	0.71	-0.11
11 top	-7.30	-4.04	0.00	0.00	6.31	-4.73
11 a	-6.67	-3.50	0.00	0.00	5.33	-4.16
11 b	-4.45	-1.51	0.00	0.00	2.67	-2.12
12 top	3.66	-3.54	0.00	0.00	9.02	-4.54
12 a	3.46	-3.04	0.00	0.00	7.59	-4.02
12 b	2.73	-1.21	0.00	0.00	3.63	-2.03
13 top	1.60	-3.78	0.00	0.00	8.80	-3.04
13 a	1.26	-3.27	0.00	0.00	7.68	-3.85
13 b	0.08	-1.36	0.00	0.00	3.93	-1.93
14 top	-1.60	-3.78	0.00	0.00	10.24	-4.74
14 a	-1.26	-3.27	0.00	0.00	8.66	-4.20
14 b	-0.08	-1.36	0.00	0.00	4.18	-2.15
15 top	-3.66	-3.54	0.00	0.00	9.99	-2.75
15 a	-3.46	-3.04	0.00	0.00	8.75	-3.62
15 b	-2.73	-1.21	0.00	0.00	4.45	-1.77
16 top	7.30	-4.04	0.00	0.00	9.65	-6.36
16 a	6.67	-3.50	0.00	0.00	8.11	-5.60
16 b	4.45	-1.51	0.00	0.00	3.84	-2.91

VEH: HL93- TANDEM BRUG(5.75.44) page 62
date 10/09/2009; time 10:51:57
Cline Avenue - Load Rating - Triple Box - 6 Webs - 111'-4" W

Summary of the results (Minimum)

Section	--- Deadload ---- Moment	Ax.Frc	----- P.T. ------ Moment	Ax.Frc	--- Live load --- Moment	Ax.Frc
1 a	-3.85	0.45	0.00	0.00	-1.72	0.16
1 b	-12.27	1.82	0.00	0.00	-12.81	1.22
1 right	-13.64	2.07	0.00	0.00	-15.92	1.53
2 left	-6.34	2.82	0.00	0.00	-10.87	1.50
2 a	-5.43	2.62	0.00	0.00	-7.98	1.18
2 b	-0.74	1.59	0.00	0.00	-1.48	0.50
2 c	-0.18	1.48	0.00	0.00	-0.82	0.74
2 right	-5.10	2.61	0.00	0.00	-9.23	0.80
3 left	-8.76	2.37	0.00	0.00	-13.24	0.44
3 a	-7.59	2.13	0.00	0.00	-11.76	0.31
3 b	-0.70	0.83	0.00	0.00	-3.32	-0.03
3 c	1.77	0.52	0.00	0.00	-0.29	0.12
3 right	-5.39	2.55	0.00	0.00	-14.76	0.35
4 left	-6.99	2.15	0.00	0.00	-9.53	1.22
4 a	-5.84	1.96	0.00	0.00	-8.12	0.92
4 b	0.91	1.00	0.00	0.00	-1.24	0.24
4 c	2.45	0.92	0.00	0.00	-0.68	0.36
4 right	-6.99	2.15	0.00	0.00	-9.52	1.22
5 left	-5.39	2.56	0.00	0.00	-14.76	0.35
5 a	-4.41	2.31	0.00	0.00	-13.21	0.22
5 b	0.88	0.93	0.00	0.00	-4.08	-0.34
5 c	1.77	0.52	0.00	0.00	-0.29	0.12
5 right	-8.76	2.37	0.00	0.00	-13.24	0.44
6 left	-5.10	2.61	0.00	0.00	-9.23	0.80
6 a	-4.28	2.43	0.00	0.00	-7.85	0.50
6 b	-0.39	1.53	0.00	0.00	-1.23	0.01
6 c	-0.18	1.48	0.00	0.00	-0.61	0.43
6 right	-6.34	2.82	0.00	0.00	-11.04	2.30
7 left	-13.64	2.07	0.00	0.00	-15.83	1.70
7 a	-12.27	1.82	0.00	0.00	-12.74	1.35
8 a	-0.92	-0.47	0.00	0.00	-0.47	0.45
8 b	-0.42	-0.09	0.00	0.00	-0.40	0.31
11 top	-7.30	-4.04	0.00	0.00	-9.75	-6.26
11 a	-6.67	-3.50	0.00	0.00	-8.20	-5.51
11 b	-4.45	-1.51	0.00	0.00	-3.96	-2.85
12 top	3.66	-3.54	0.00	0.00	-9.99	-2.75
12 a	3.46	-3.04	0.00	0.00	-8.75	-3.62
12 b	2.73	-1.21	0.00	0.00	-4.45	-1.77
13 top	1.60	-3.78	0.00	0.00	-10.24	-4.74
13 a	1.26	-3.27	0.00	0.00	-8.66	-4.20
13 b	0.08	-1.36	0.00	0.00	-4.18	-2.15
14 top	-1.60	-3.78	0.00	0.00	-8.80	-3.04
14 a	-1.26	-3.27	0.00	0.00	-7.68	-3.85
14 b	-0.08	-1.36	0.00	0.00	-3.93	-1.93
15 top	-3.66	-3.54	0.00	0.00	-9.02	-4.54
15 a	-3.46	-3.04	0.00	0.00	-7.59	-4.02
15 b	-2.73	-1.21	0.00	0.00	-3.63	-2.03
16 top	7.30	-4.04	0.00	0.00	-6.31	-4.73
16 a	6.67	-3.50	0.00	0.00	-5.33	-4.16
16 b	4.45	-1.51	0.00	0.00	-2.67	-2.12

VEH: R1 - TOLL ROAD BRUG(5.75.44) page 61
date 10/09/2009; time 10:51:58
Cline Avenue - Load Rating - Triple Box - 6 Webs - 111'-4" W

Summary of the results (Maximum)

Section	--- Deadload ---- Moment	Ax.Frc	----- P.T. ------ Moment	Ax.Frc	--- Live load --- Moment	Ax.Frc
1 a	-3.85	0.45	0.00	0.00	0.62	0.15
1 b	-12.27	1.82	0.00	0.00	0.09	0.18
1 right	-13.64	2.07	0.00	0.00	0.11	0.21
2 left	-6.34	2.82	0.00	0.00	0.12	0.08
2 a	-5.43	2.62	0.00	0.00	0.30	1.60
2 b	-0.74	1.59	0.00	0.00	3.60	-0.18
2 c	-0.18	1.48	0.00	0.00	4.59	-0.73
2 right	-5.10	2.61	0.00	0.00	1.17	1.21
3 left	-8.76	2.37	0.00	0.00	8.11	1.22
3 a	-7.59	2.13	0.00	0.00	8.59	1.05
3 b	-0.70	0.83	0.00	0.00	6.60	0.18
3 c	1.77	0.52	0.00	0.00	6.19	-0.04
3 right	-5.39	2.55	0.00	0.00	5.46	1.83
4 left	-6.99	2.15	0.00	0.00	1.32	1.29
4 a	-5.84	1.96	0.00	0.00	2.01	0.99
4 b	0.91	1.00	0.00	0.00	4.36	0.33
4 c	2.45	0.92	0.00	0.00	4.84	0.07
4 right	-6.99	2.15	0.00	0.00	1.32	1.29
5 left	-5.39	2.56	0.00	0.00	5.46	1.83
5 a	-4.41	2.31	0.00	0.00	5.59	1.67
5 b	0.88	0.93	0.00	0.00	5.16	0.74
5 c	1.77	0.52	0.00	0.00	6.19	-0.04
5 right	-8.76	2.37	0.00	0.00	8.64	1.21
6 left	-5.10	2.61	0.00	0.00	1.17	1.21
6 a	-4.28	2.43	0.00	0.00	1.89	0.84
6 b	-0.39	1.53	0.00	0.00	4.34	-0.55
6 c	-0.18	1.48	0.00	0.00	4.58	-0.73
6 right	-6.34	2.82	0.00	0.00	0.12	0.08
7 left	-13.64	2.07	0.00	0.00	0.11	0.21
7 a	-12.27	1.82	0.00	0.00	0.09	0.18
8 a	-0.92	-0.47	0.00	0.00	1.36	-0.86
8 b	-0.42	-0.09	0.00	0.00	1.15	-0.47
11 top	-7.30	-4.04	0.00	0.00	7.33	-3.65
11 a	-6.67	-3.50	0.00	0.00	6.40	-3.18
11 b	-4.45	-1.51	0.00	0.00	3.56	-1.61
12 top	3.66	-3.54	0.00	0.00	10.34	-3.22
12 a	3.46	-3.04	0.00	0.00	9.00	-2.84
12 b	2.73	-1.21	0.00	0.00	4.74	-1.53
13 top	1.60	-3.78	0.00	0.00	12.10	-3.00
13 a	1.26	-3.27	0.00	0.00	10.62	-2.59
13 b	0.08	-1.36	0.00	0.00	5.83	-1.24
14 top	-1.60	-3.78	0.00	0.00	12.53	-3.57
14 a	-1.26	-3.27	0.00	0.00	10.93	-3.16
14 b	-0.08	-1.36	0.00	0.00	5.73	-1.74
15 top	-3.66	-3.54	0.00	0.00	14.35	-2.56
15 a	-3.46	-3.04	0.00	0.00	12.58	-2.19
15 b	-2.73	-1.21	0.00	0.00	6.79	-0.96
16 top	7.30	-4.04	0.00	0.00	11.42	-4.73
16 a	6.67	-3.50	0.00	0.00	9.88	-4.13
16 b	4.45	-1.51	0.00	0.00	5.07	-2.15

VEH: R1 - TOLL ROAD BRUG(5.75.44) page 62
date 10/09/2009; time 10:51:58
Cline Avenue - Load Rating - Triple Box - 6 Webs - 111'-4" W

Summary of the results (Minimum)

Section	--- Deadload ---- Moment	Ax.Frc	----- P.T. ------ Moment	Ax.Frc	--- Live load --- Moment	Ax.Frc
1 a	-3.85	0.45	0.00	0.00	-2.21	0.22
1 b	-12.27	1.82	0.00	0.00	-11.96	1.08
1 right	-13.64	2.07	0.00	0.00	-14.44	1.31
2 left	-6.34	2.82	0.00	0.00	-8.36	-0.02
2 a	-5.43	2.62	0.00	0.00	-6.98	-0.37
2 b	-0.74	1.59	0.00	0.00	-1.30	0.93
2 c	-0.18	1.48	0.00	0.00	-1.08	0.95
2 right	-5.10	2.61	0.00	0.00	-7.07	0.30
3 left	-8.76	2.37	0.00	0.00	-12.73	0.46
3 a	-7.59	2.13	0.00	0.00	-11.32	0.38
3 b	-0.70	0.83	0.00	0.00	-3.62	0.23
3 c	1.77	0.52	0.00	0.00	-0.43	0.21
3 right	-5.39	2.55	0.00	0.00	-15.49	0.29
4 left	-6.99	2.15	0.00	0.00	-7.62	1.00
4 a	-5.84	1.96	0.00	0.00	-6.69	0.89
4 b	0.91	1.00	0.00	0.00	-1.24	0.47
4 c	2.45	0.92	0.00	0.00	-0.95	0.53
4 right	-6.99	2.15	0.00	0.00	-7.62	1.00
5 left	-5.39	2.56	0.00	0.00	-15.49	0.30
5 a	-4.41	2.31	0.00	0.00	-13.92	0.21
5 b	0.88	0.93	0.00	0.00	-5.01	-0.44
5 c	1.77	0.52	0.00	0.00	-0.43	0.21
5 right	-8.76	2.37	0.00	0.00	-12.73	0.46
6 left	-5.10	2.61	0.00	0.00	-7.07	0.30
6 a	-4.28	2.43	0.00	0.00	-6.20	0.21
6 b	-0.39	1.53	0.00	0.00	-1.18	0.59
6 c	-0.18	1.48	0.00	0.00	-0.86	0.65
6 right	-6.34	2.82	0.00	0.00	-8.36	-0.02
7 left	-13.64	2.07	0.00	0.00	-14.39	1.43
7 a	-12.27	1.82	0.00	0.00	-11.93	1.17
8 a	-0.92	-0.47	0.00	0.00	-0.73	0.47
8 b	-0.42	-0.09	0.00	0.00	-0.62	0.48
11 top	-7.30	-4.04	0.00	0.00	-11.49	-4.67
11 a	-6.67	-3.50	0.00	0.00	-9.96	-4.08
11 b	-4.45	-1.51	0.00	0.00	-5.20	-2.09
12 top	3.66	-3.54	0.00	0.00	-14.35	-2.56
12 a	3.46	-3.04	0.00	0.00	-12.58	-2.19
12 b	2.73	-1.21	0.00	0.00	-6.79	-0.96
13 top	1.60	-3.78	0.00	0.00	-12.54	-3.57
13 a	1.26	-3.27	0.00	0.00	-10.93	-3.16
13 b	0.08	-1.36	0.00	0.00	-5.73	-1.74
14 top	-1.60	-3.78	0.00	0.00	-12.10	-3.00
14 a	-1.26	-3.27	0.00	0.00	-10.62	-2.59
14 b	-0.08	-1.36	0.00	0.00	-5.83	-1.24
15 top	-3.66	-3.54	0.00	0.00	-10.34	-3.22
15 a	-3.46	-3.04	0.00	0.00	-9.00	-2.84
15 b	-2.73	-1.21	0.00	0.00	-4.74	-1.53
16 top	7.30	-4.04	0.00	0.00	-7.33	-3.65
16 a	6.67	-3.50	0.00	0.00	-6.40	-3.18
16 b	4.45	-1.51	0.00	0.00	-3.56	-1.61

VEH: R2 - TOLL ROAD BRUG(5.75.44) page 61
date 10/09/2009; time 10:51:59
Cline Avenue - Load Rating - Triple Box - 6 Webs - 111'-4" W

Summary of the results (Maximum)

Section	--- Deadload ---		----- P.T. ------		--- Live load ---	
	Moment	Ax.Frc	Moment	Ax.Frc	Moment	Ax.Frc
1 a	-3.85	0.45	0.00	0.00	0.94	0.12
1 b	-12.27	1.82	0.00	0.00	0.03	0.18
1 right	-13.64	2.07	0.00	0.00	0.04	0.21
2 left	-6.34	2.82	0.00	0.00	0.11	0.08
2 a	-5.43	2.62	0.00	0.00	0.82	1.35
2 b	-0.74	1.59	0.00	0.00	3.43	-0.20
2 c	-0.18	1.48	0.00	0.00	4.34	-0.69
2 right	-5.10	2.61	0.00	0.00	1.41	1.05
3 left	-8.76	2.37	0.00	0.00	8.62	1.12
3 a	-7.59	2.13	0.00	0.00	8.64	0.90
3 b	-0.70	0.83	0.00	0.00	6.49	0.15
3 c	1.77	0.52	0.00	0.00	5.92	0.03
3 right	-5.39	2.55	0.00	0.00	5.56	1.76
4 left	-6.99	2.15	0.00	0.00	1.51	1.13
4 a	-5.84	1.96	0.00	0.00	2.35	0.77
4 b	0.91	1.00	0.00	0.00	4.14	0.25
4 c	2.45	0.92	0.00	0.00	4.59	0.04
4 right	-6.99	2.15	0.00	0.00	1.51	1.13
5 left	-5.39	2.56	0.00	0.00	5.56	1.76
5 a	-4.41	2.31	0.00	0.00	5.76	1.53
5 b	0.88	0.93	0.00	0.00	5.14	0.89
5 c	1.77	0.52	0.00	0.00	5.92	0.03
5 right	-8.76	2.37	0.00	0.00	8.62	1.12
6 left	-5.10	2.61	0.00	0.00	1.41	1.05
6 a	-4.28	2.43	0.00	0.00	2.28	0.64
6 b	-0.39	1.53	0.00	0.00	4.12	-0.57
6 c	-0.18	1.48	0.00	0.00	4.34	-0.69
6 right	-6.34	2.82	0.00	0.00	0.11	0.08
7 left	-13.64	2.07	0.00	0.00	0.04	0.21
7 a	-12.27	1.82	0.00	0.00	0.03	0.18
8 a	-0.92	-0.47	0.00	0.00	1.25	-0.76
8 b	-0.42	-0.09	0.00	0.00	1.06	-0.44
11 top	-7.30	-4.04	0.00	0.00	6.35	-3.81
11 a	-6.67	-3.50	0.00	0.00	5.49	-3.22
11 b	-4.45	-1.51	0.00	0.00	3.05	-1.45
12 top	3.66	-3.54	0.00	0.00	8.80	-2.87
12 a	3.46	-3.04	0.00	0.00	7.61	-2.49
12 b	2.73	-1.21	0.00	0.00	4.02	-1.27
13 top	1.60	-3.78	0.00	0.00	11.07	-3.18
13 a	1.26	-3.27	0.00	0.00	9.66	-2.64
13 b	0.08	-1.36	0.00	0.00	5.30	-1.08
14 top	-1.60	-3.78	0.00	0.00	10.96	-3.21
14 a	-1.26	-3.27	0.00	0.00	9.53	-2.80
14 b	-0.08	-1.36	0.00	0.00	4.99	-1.48
15 top	-3.66	-3.54	0.00	0.00	13.30	-2.76
15 a	-3.46	-3.04	0.00	0.00	11.57	-2.25
15 b	-2.73	-1.21	0.00	0.00	6.25	-0.82
16 top	7.30	-4.04	0.00	0.00	9.88	-4.92
16 a	6.67	-3.50	0.00	0.00	8.45	-4.15
16 b	4.45	-1.51	0.00	0.00	4.30	-1.91

VEH: R2 - TOLL ROAD BRUG(5.75.44) page 62
date 10/09/2009; time 10:51:59
Cline Avenue - Load Rating - Triple Box - 6 Webs - 111'-4" W

Summary of the results (Minimum)

Section	--- Deadload ---		----- P.T. ------		--- Live load ---	
	Moment	Ax.Frc	Moment	Ax.Frc	Moment	Ax.Frc
1 a	-3.85	0.45	0.00	0.00	-1.40	0.16
1 b	-12.27	1.82	0.00	0.00	-9.61	0.86
1 right	-13.64	2.07	0.00	0.00	-12.20	1.12
2 left	-6.34	2.82	0.00	0.00	-7.23	-0.01
2 a	-5.43	2.62	0.00	0.00	-6.09	-0.34
2 b	-0.74	1.59	0.00	0.00	-1.01	0.73
2 c	-0.18	1.48	0.00	0.00	-0.87	0.79
2 right	-5.10	2.61	0.00	0.00	-5.60	0.19
3 left	-8.76	2.37	0.00	0.00	-10.53	0.41
3 a	-7.59	2.13	0.00	0.00	-9.29	0.33
3 b	-0.70	0.83	0.00	0.00	-3.42	0.26
3 c	1.77	0.52	0.00	0.00	-0.36	0.20
3 right	-5.39	2.55	0.00	0.00	-13.24	0.26
4 left	-6.99	2.15	0.00	0.00	-6.16	0.22
4 a	-5.84	1.96	0.00	0.00	-5.42	0.65
4 b	0.91	1.00	0.00	0.00	-1.07	0.36
4 c	2.45	0.92	0.00	0.00	-0.80	0.36
4 right	-6.99	2.15	0.00	0.00	-6.16	0.22
5 left	-5.39	2.56	0.00	0.00	-13.24	0.26
5 a	-4.41	2.31	0.00	0.00	-11.86	0.18
5 b	0.88	0.93	0.00	0.00	-4.78	-0.37
5 c	1.77	0.52	0.00	0.00	-0.36	0.20
5 right	-8.76	2.37	0.00	0.00	-10.53	0.41
6 left	-5.10	2.61	0.00	0.00	-5.60	0.19
6 a	-4.28	2.43	0.00	0.00	-4.93	0.06
6 b	-0.39	1.53	0.00	0.00	-1.00	0.46
6 c	-0.18	1.48	0.00	0.00	-0.87	0.79
6 right	-6.34	2.82	0.00	0.00	-7.23	-0.01
7 left	-13.64	2.07	0.00	0.00	-12.19	1.26
7 a	-12.27	1.82	0.00	0.00	-9.60	0.94
8 a	-0.92	-0.47	0.00	0.00	-0.65	0.44
8 b	-0.42	-0.09	0.00	0.00	-0.55	0.44
11 top	-7.30	-4.04	0.00	0.00	-9.94	-4.88
11 a	-6.67	-3.50	0.00	0.00	-8.52	-4.11
11 b	-4.45	-1.51	0.00	0.00	-4.42	-1.86
12 top	3.66	-3.54	0.00	0.00	-13.30	-2.76
12 a	3.46	-3.04	0.00	0.00	-11.56	-2.25
12 b	2.73	-1.21	0.00	0.00	-6.25	-0.82
13 top	1.60	-3.78	0.00	0.00	-10.96	-3.21
13 a	1.26	-3.27	0.00	0.00	-9.53	-2.80
13 b	0.08	-1.36	0.00	0.00	-4.99	-1.48
14 top	-1.60	-3.78	0.00	0.00	-11.07	-3.18
14 a	-1.26	-3.27	0.00	0.00	-9.66	-2.64
14 b	-0.08	-1.36	0.00	0.00	-5.30	-1.08
15 top	-3.66	-3.54	0.00	0.00	-8.80	-2.87
15 a	-3.46	-3.04	0.00	0.00	-7.61	-2.49
15 b	-2.73	-1.21	0.00	0.00	-4.02	-1.27
16 top	7.30	-4.04	0.00	0.00	-6.35	-3.81
16 a	6.67	-3.50	0.00	0.00	-5.49	-3.22
16 b	4.45	-1.51	0.00	0.00	-3.05	-1.45

VEH: R3 - TOLL ROAD BRUG(5.75.44) page 61
date 10/09/2009; time 10:52:00
Cline Avenue - Load Rating - Triple Box - 6 Webs - 111'-4" W

Summary of the results (Maximum)

Section	--- Deadload ---		----- P.T. ------		--- Live load ---	
	Moment	Ax.Frc	Moment	Ax.Frc	Moment	Ax.Frc
1 a	-3.85	0.45	0.00	0.00	0.74	0.04
1 b	-12.27	1.82	0.00	0.00	0.02	0.13
1 right	-13.64	2.07	0.00	0.00	0.03	0.15
2 left	-6.34	2.82	0.00	0.00	0.16	0.12
2 a	-5.43	2.62	0.00	0.00	0.49	1.33
2 b	-0.74	1.59	0.00	0.00	3.40	-0.38
2 c	-0.18	1.48	0.00	0.00	4.28	-0.92
2 right	-5.10	2.61	0.00	0.00	1.30	0.74
3 left	-8.76	2.37	0.00	0.00	10.56	0.93
3 a	-7.59	2.13	0.00	0.00	10.54	0.67
3 b	-0.70	0.83	0.00	0.00	7.44	0.03
3 c	1.77	0.52	0.00	0.00	5.58	0.06
3 right	-5.39	2.55	0.00	0.00	6.80	1.61
4 left	-6.99	2.15	0.00	0.00	1.38	0.86
4 a	-5.84	1.96	0.00	0.00	2.15	0.56
4 b	0.91	1.00	0.00	0.00	4.25	-0.06
4 c	2.45	0.92	0.00	0.00	4.61	-0.26
4 right	-6.99	2.15	0.00	0.00	1.38	0.86
5 left	-5.39	2.56	0.00	0.00	6.80	1.61
5 a	-4.41	2.31	0.00	0.00	6.96	1.45
5 b	0.88	0.93	0.00	0.00	5.79	0.79
5 c	1.77	0.52	0.00	0.00	5.58	0.06
5 right	-8.76	2.37	0.00	0.00	10.62	0.94
6 left	-5.10	2.61	0.00	0.00	1.30	0.74
6 a	-4.28	2.43	0.00	0.00	2.09	0.37
6 b	-0.39	1.53	0.00	0.00	4.24	-0.90
6 c	-0.18	1.48	0.00	0.00	4.28	-0.92
6 right	-6.34	2.82	0.00	0.00	0.16	0.12
7 left	-13.64	2.07	0.00	0.00	0.03	0.15
7 a	-12.27	1.82	0.00	0.00	0.02	0.13
8 a	-0.92	-0.47	0.00	0.00	1.37	-0.73
8 b	-0.42	-0.09	0.00	0.00	1.16	-0.37
11 top	-7.30	-4.04	0.00	0.00	6.35	-1.90
11 a	-6.67	-3.50	0.00	0.00	5.52	-1.67
11 b	-4.45	-1.51	0.00	0.00	2.97	-1.67
12 top	3.66	-3.54	0.00	0.00	8.71	-3.13
12 a	3.46	-3.04	0.00	0.00	7.54	-1.72
12 b	2.73	-1.21	0.00	0.00	4.01	-0.97
13 top	1.60	-3.78	0.00	0.00	12.42	-2.79
13 a	1.26	-3.27	0.00	0.00	10.89	-2.44
13 b	0.08	-1.36	0.00	0.00	5.92	-1.18
14 top	-1.60	-3.78	0.00	0.00	11.51	-3.56
14 a	-1.26	-3.27	0.00	0.00	10.05	-2.12
14 b	-0.08	-1.36	0.00	0.00	5.32	-1.23
15 top	-3.66	-3.54	0.00	0.00	15.29	-2.25
15 a	-3.46	-3.04	0.00	0.00	13.40	-1.94
15 b	-2.73	-1.21	0.00	0.00	7.15	-0.84
16 top	7.30	-4.04	0.00	0.00	9.54	-4.57
16 a	6.67	-3.50	0.00	0.00	8.17	-4.07
16 b	4.45	-1.51	0.00	0.00	4.02	-2.16

VEH: R3 - TOLL ROAD BRUG(5.75.44) page 62
date 10/09/2009; time 10:52:00
Cline Avenue - Load Rating - Triple Box - 6 Webs - 111'-4" W

Summary of the results (Minimum)

Section	--- Deadload ---		----- P.T. ------		--- Live load ---	
	Moment	Ax.Frc	Moment	Ax.Frc	Moment	Ax.Frc
1 a	-3.85	0.45	0.00	0.00	-1.55	0.10
1 b	-12.27	1.82	0.00	0.00	-10.08	0.76
1 right	-13.64	2.07	0.00	0.00	-12.42	0.96
2 left	-6.34	2.82	0.00	0.00	-7.65	-0.04
2 a	-5.43	2.62	0.00	0.00	-6.59	-0.38
2 b	-0.74	1.59	0.00	0.00	-0.97	-0.28
2 c	-0.18	1.48	0.00	0.00	-0.77	0.62
2 right	-5.10	2.61	0.00	0.00	-5.68	0.06
3 left	-8.76	2.37	0.00	0.00	-10.76	0.35
3 a	-7.59	2.13	0.00	0.00	-10.02	0.31
3 b	-0.70	0.83	0.00	0.00	-4.15	0.35
3 c	1.77	0.52	0.00	0.00	-0.35	-0.11
3 right	-5.39	2.55	0.00	0.00	-14.31	-0.09
4 left	-6.99	2.15	0.00	0.00	-6.42	0.79
4 a	-5.84	1.96	0.00	0.00	-5.58	0.61
4 b	0.91	1.00	0.00	0.00	-1.16	0.37
4 c	2.45	0.92	0.00	0.00	-0.75	0.20
4 right	-6.99	2.15	0.00	0.00	-6.42	0.79
5 left	-5.39	2.56	0.00	0.00	-14.31	-0.09
5 a	-4.41	2.31	0.00	0.00	-13.38	-0.13
5 b	0.88	0.93	0.00	0.00	-5.91	-0.36
5 c	1.77	0.52	0.00	0.00	-0.35	-0.11
5 right	-8.76	2.37	0.00	0.00	-10.76	0.35
6 left	-5.10	2.61	0.00	0.00	-5.68	0.06
6 a	-4.28	2.43	0.00	0.00	-4.92	-0.04
6 b	-0.39	1.53	0.00	0.00	-0.98	0.80
6 c	-0.18	1.48	0.00	0.00	-0.77	0.62
6 right	-6.34	2.82	0.00	0.00	-7.65	-0.04
7 left	-13.64	2.07	0.00	0.00	-12.37	1.05
7 a	-12.27	1.82	0.00	0.00	-10.04	0.82
8 a	-0.92	-0.47	0.00	0.00	-0.61	0.47
8 b	-0.42	-0.09	0.00	0.00	-0.53	0.47
11 top	-7.30	-4.04	0.00	0.00	-9.64	-4.52
11 a	-6.67	-3.50	0.00	0.00	-8.28	-4.02
11 b	-4.45	-1.51	0.00	0.00	-4.15	-2.11
12 top	3.66	-3.54	0.00	0.00	-15.29	-2.25
12 a	3.46	-3.04	0.00	0.00	-13.40	-1.94
12 b	2.73	-1.21	0.00	0.00	-7.15	-0.84
13 top	1.60	-3.78	0.00	0.00	-11.51	-3.56
13 a	1.26	-3.27	0.00	0.00	-10.05	-2.12
13 b	0.08	-1.36	0.00	0.00	-5.32	-1.23
14 top	-1.60	-3.78	0.00	0.00	-12.42	-2.80
14 a	-1.26	-3.27	0.00	0.00	-10.89	-2.44
14 b	-0.08	-1.36	0.00	0.00	-5.92	-1.18
15 top	-3.66	-3.54	0.00	0.00	-8.71	-3.13
15 a	-3.46	-3.04	0.00	0.00	-7.54	-1.72
15 b	-2.73	-1.21	0.00	0.00	-4.01	-0.97
16 top	7.30	-4.04	0.00	0.00	-6.35	-1.90
16 a	6.67	-3.50	0.00	0.00	-5.52	-1.67
16 b	4.45	-1.51	0.00	0.00	-2.97	-1.67

VEH: R4 - MICHIGAN T BRUG(5.75.44) page 61
date 10/09/2009; time 10:52:00
Cline Avenue - Load Rating - Triple Box - 6 Webs - 111'-4" W

Summary of the results (Maximum)

Section	--- Deadload ---		----- P.T. ------		--- Live load ---	
	Moment	Ax.Frc	Moment	Ax.Frc	Moment	Ax.Frc
1 a	-3.85	0.45	0.00	0.00	0.58	0.09
1 b	-12.27	1.82	0.00	0.00	0.24	0.40
1 right	-13.64	2.07	0.00	0.00	0.05	0.55
2 left	-6.34	2.82	0.00	0.00	0.79	1.75
2 a	-5.43	2.62	0.00	0.00	1.67	1.41
2 b	-0.74	1.59	0.00	0.00	3.67	-0.31
2 c	-0.18	1.48	0.00	0.00	4.47	-0.93
2 right	-5.10	2.61	0.00	0.00	2.86	0.82
3 left	-8.76	2.37	0.00	0.00	13.14	0.81
3 a	-7.59	2.13	0.00	0.00	12.76	0.73
3 b	-0.70	0.83	0.00	0.00	8.25	0.14
3 c	1.77	0.52	0.00	0.00	5.66	0.18
3 right	-5.39	2.55	0.00	0.00	8.96	2.04
4 left	-6.99	2.15	0.00	0.00	2.96	0.93
4 a	-5.84	1.96	0.00	0.00	3.53	0.60
4 b	0.91	1.00	0.00	0.00	4.64	0.25
4 c	2.45	0.92	0.00	0.00	4.84	0.03
4 right	-6.99	2.15	0.00	0.00	2.96	0.93
5 left	-5.39	2.56	0.00	0.00	8.96	2.04
5 a	-4.41	2.31	0.00	0.00	8.83	1.86
5 b	0.88	0.93	0.00	0.00	6.38	1.14
5 c	1.77	0.52	0.00	0.00	5.66	0.18
5 right	-8.76	2.37	0.00	0.00	13.14	0.81
6 left	-5.10	2.61	0.00	0.00	2.86	0.82
6 a	-4.28	2.43	0.00	0.00	3.45	0.41
6 b	-0.39	1.53	0.00	0.00	4.62	-0.86
6 c	-0.18	1.48	0.00	0.00	4.47	-0.93
6 right	-6.34	2.82	0.00	0.00	0.79	1.75
7 left	-13.64	2.07	0.00	0.00	0.05	0.55
7 a	-12.27	1.82	0.00	0.00	0.24	0.40
8 a	-0.92	-0.47	0.00	0.00	1.66	-0.99
8 b	-0.42	-0.09	0.00	0.00	1.43	-0.65
11 top	-7.30	-4.04	0.00	0.00	7.67	-2.20
11 a	-6.67	-3.50	0.00	0.00	6.77	-1.90
11 b	-4.45	-1.51	0.00	0.00	3.65	-1.27
12 top	3.66	-3.54	0.00	0.00	10.01	-1.68
12 a	3.46	-3.04	0.00	0.00	8.86	-1.50
12 b	2.73	-1.21	0.00	0.00	4.87	-0.87
13 top	1.60	-3.78	0.00	0.00	14.08	-2.26
13 a	1.26	-3.27	0.00	0.00	12.42	-1.85
13 b	0.08	-1.36	0.00	0.00	6.97	-0.72
14 top	-1.60	-3.78	0.00	0.00	13.23	-2.17
14 a	-1.26	-3.27	0.00	0.00	11.70	-1.95
14 b	-0.08	-1.36	0.00	0.00	6.35	-1.16
15 top	-3.66	-3.54	0.00	0.00	17.51	-0.60
15 a	-3.46	-3.04	0.00	0.00	15.28	-1.30
15 b	-2.73	-1.21	0.00	0.00	8.36	-0.34
16 top	7.30	-4.04	0.00	0.00	11.14	-3.92
16 a	6.67	-3.50	0.00	0.00	9.68	-3.31
16 b	4.45	-1.51	0.00	0.00	5.05	-1.59

VEH: R4 - MICHIGAN T BRUG(5.75.44) page 62
date 10/09/2009; time 10:52:00
Cline Avenue - Load Rating - Triple Box - 6 Webs - 111'-4" W

Summary of the results (Minimum)

Section	--- Deadload ---		----- P.T. ------		--- Live load ---	
	Moment	Ax.Frc	Moment	Ax.Frc	Moment	Ax.Frc
1 a	-3.85	0.45	0.00	0.00	-1.75	0.16
1 b	-12.27	1.82	0.00	0.00	-9.47	0.77
1 right	-13.64	2.07	0.00	0.00	-11.64	1.00
2 left	-6.34	2.82	0.00	0.00	-7.89	-0.34
2 a	-5.43	2.62	0.00	0.00	-6.73	-0.42
2 b	-0.74	1.59	0.00	0.00	-1.20	0.23
2 c	-0.18	1.48	0.00	0.00	-0.96	0.75
2 right	-5.10	2.61	0.00	0.00	-5.26	-1.58
3 left	-8.76	2.37	0.00	0.00	-11.74	0.39
3 a	-7.59	2.13	0.00	0.00	-10.87	0.37
3 b	-0.70	0.83	0.00	0.00	-4.61	0.46
3 c	1.77	0.52	0.00	0.00	-0.43	-0.18
3 right	-5.39	2.55	0.00	0.00	-15.76	-0.17
4 left	-6.99	2.15	0.00	0.00	-6.40	-0.16
4 a	-5.84	1.96	0.00	0.00	-5.36	-0.17
4 b	0.91	1.00	0.00	0.00	-1.35	0.33
4 c	2.45	0.92	0.00	0.00	-0.93	0.56
4 right	-6.99	2.15	0.00	0.00	-6.40	-0.16
5 left	-5.39	2.56	0.00	0.00	-15.76	-0.17
5 a	-4.41	2.31	0.00	0.00	-14.70	-0.29
5 b	0.88	0.93	0.00	0.00	-6.68	-0.45
5 c	1.77	0.52	0.00	0.00	-0.43	-0.18
5 right	-8.76	2.37	0.00	0.00	-11.74	0.39
6 left	-5.10	2.61	0.00	0.00	-5.26	-1.58
6 a	-4.28	2.43	0.00	0.00	-4.45	-0.21
6 b	-0.39	1.53	0.00	0.00	-1.19	0.63
6 c	-0.18	1.48	0.00	0.00	-0.96	0.74
6 right	-6.34	2.82	0.00	0.00	-7.89	-0.34
7 left	-13.64	2.07	0.00	0.00	-11.64	1.00
7 a	-12.27	1.82	0.00	0.00	-9.47	0.77
8 a	-0.92	-0.47	0.00	0.00	-0.83	0.59
8 b	-0.42	-0.09	0.00	0.00	-0.70	0.51
11 top	-7.30	-4.04	0.00	0.00	-11.24	-3.86
11 a	-6.67	-3.50	0.00	0.00	-9.79	-3.26
11 b	-4.45	-1.51	0.00	0.00	-5.20	-1.53
12 top	3.66	-3.54	0.00	0.00	-17.51	-0.60
12 a	3.46	-3.04	0.00	0.00	-15.28	-1.30
12 b	2.73	-1.21	0.00	0.00	-8.36	-0.34
13 top	1.60	-3.78	0.00	0.00	-13.23	-2.17
13 a	1.26	-3.27	0.00	0.00	-11.70	-1.95
13 b	0.08	-1.36	0.00	0.00	-6.35	-1.16
14 top	-1.60	-3.78	0.00	0.00	-14.08	-2.26
14 a	-1.26	-3.27	0.00	0.00	-12.42	-1.85
14 b	-0.08	-1.36	0.00	0.00	-6.97	-0.72
15 top	-3.66	-3.54	0.00	0.00	-10.01	-1.68
15 a	-3.46	-3.04	0.00	0.00	-8.86	-1.50
15 b	-2.73	-1.21	0.00	0.00	-4.87	-0.87
16 top	7.30	-4.04	0.00	0.00	-7.67	-2.20
16 a	6.67	-3.50	0.00	0.00	-6.77	-1.90
16 b	4.45	-1.51	0.00	0.00	-3.65	-1.27

VEH: R5 - MICHIGAN T BRUG(5.75.44) page 61
date 10/09/2009; time 10:52:01
Cline Avenue - Load Rating - Triple Box - 6 Webs - 111'-4" W

Summary of the results (Maximum)

Section	--- Deadload ---		----- P.T. ------		--- Live load ---	
	Moment	Ax.Frc	Moment	Ax.Frc	Moment	Ax.Frc
1 a	-3.85	0.45	0.00	0.00	0.28	0.17
1 b	-12.27	1.82	0.00	0.00	0.03	0.18
1 right	-13.64	2.07	0.00	0.00	0.04	0.21
2 left	-6.34	2.82	0.00	0.00	0.16	0.13
2 a	-5.43	2.62	0.00	0.00	0.79	1.71
2 b	-0.74	1.59	0.00	0.00	3.99	-0.31
2 c	-0.18	1.48	0.00	0.00	4.93	-1.01
2 right	-5.10	2.61	0.00	0.00	2.27	0.85
3 left	-8.76	2.37	0.00	0.00	12.82	1.18
3 a	-7.59	2.13	0.00	0.00	12.42	1.06
3 b	-0.70	0.83	0.00	0.00	8.32	0.18
3 c	1.77	0.52	0.00	0.00	6.27	0.07
3 right	-5.39	2.55	0.00	0.00	8.35	2.09
4 left	-6.99	2.15	0.00	0.00	2.40	1.04
4 a	-5.84	1.96	0.00	0.00	2.85	0.89
4 b	0.91	1.00	0.00	0.00	5.02	0.29
4 c	2.45	0.92	0.00	0.00	5.30	0.00
4 right	-6.99	2.15	0.00	0.00	2.40	1.04
5 left	-5.39	2.56	0.00	0.00	8.35	2.09
5 a	-4.41	2.31	0.00	0.00	8.21	1.96
5 b	0.88	0.93	0.00	0.00	6.40	1.24
5 c	1.77	0.52	0.00	0.00	6.27	0.07
5 right	-8.76	2.37	0.00	0.00	12.82	1.18
6 left	-5.10	2.61	0.00	0.00	2.27	0.85
6 a	-4.28	2.43	0.00	0.00	2.76	0.67
6 b	-0.39	1.53	0.00	0.00	5.00	-0.86
6 c	-0.18	1.48	0.00	0.00	4.92	-1.01
6 right	-6.34	2.82	0.00	0.00	0.16	0.13
7 left	-13.64	2.07	0.00	0.00	0.04	0.21
7 a	-12.27	1.82	0.00	0.00	0.03	0.18
8 a	-0.92	-0.47	0.00	0.00	1.78	-1.07
8 b	-0.42	-0.09	0.00	0.00	1.51	-0.62
11 top	-7.30	-4.04	0.00	0.00	8.55	-1.95
11 a	-6.67	-3.50	0.00	0.00	7.52	-1.73
11 b	-4.45	-1.51	0.00	0.00	4.22	-1.60
12 top	3.66	-3.54	0.00	0.00	11.88	-3.12
12 a	3.46	-3.04	0.00	0.00	10.40	-2.79
12 b	2.73	-1.21	0.00	0.00	5.51	-1.59
13 top	1.60	-3.78	0.00	0.00	15.37	-2.30
13 a	1.26	-3.27	0.00	0.00	13.60	-2.03
13 b	0.08	-1.36	0.00	0.00	7.56	-1.05
14 top	-1.60	-3.78	0.00	0.00	15.06	-3.62
14 a	-1.26	-3.27	0.00	0.00	13.21	-3.25
14 b	-0.08	-1.36	0.00	0.00	6.96	-1.89
15 top	-3.66	-3.54	0.00	0.00	18.68	-1.68
15 a	-3.46	-3.04	0.00	0.00	16.47	-1.46
15 b	-2.73	-1.21	0.00	0.00	8.96	-0.66
16 top	7.30	-4.04	0.00	0.00	13.04	-4.01
16 a	6.67	-3.50	0.00	0.00	11.40	-3.58
16 b	4.45	-1.51	0.00	0.00	5.90	-2.05

VEH: R5 - MICHIGAN T BRUG(5.75.44) page 62
date 10/09/2009; time 10:52:01
Cline Avenue - Load Rating - Triple Box - 6 Webs - 111'-4" W

Summary of the results (Minimum)

Section	--- Deadload ---		----- P.T. ------		--- Live load ---	
	Moment	Ax.Frc	Moment	Ax.Frc	Moment	Ax.Frc
1 a	-3.85	0.45	0.00	0.00	-2.73	0.23
1 b	-12.27	1.82	0.00	0.00	-12.92	1.04
1 right	-13.64	2.07	0.00	0.00	-15.12	1.20
2 left	-6.34	2.82	0.00	0.00	-9.17	-0.15
2 a	-5.43	2.62	0.00	0.00	-8.16	-0.48
2 b	-0.74	1.59	0.00	0.00	-1.29	1.06
2 c	-0.18	1.48	0.00	0.00	-1.14	1.05
2 right	-5.10	2.61	0.00	0.00	-7.21	0.12
3 left	-8.76	2.37	0.00	0.00	-13.81	0.39
3 a	-7.59	2.13	0.00	0.00	-12.80	0.35
3 b	-0.70	0.83	0.00	0.00	-4.89	0.44
3 c	1.77	0.52	0.00	0.00	-0.49	0.28
3 right	-5.39	2.55	0.00	0.00	-17.87	-0.19
4 left	-6.99	2.15	0.00	0.00	-8.04	0.99
4 a	-5.84	1.96	0.00	0.00	-7.06	0.89
4 b	0.91	1.00	0.00	0.00	-1.51	0.54
4 c	2.45	0.92	0.00	0.00	-1.09	0.51
4 right	-6.99	2.15	0.00	0.00	-8.04	0.99
5 left	-5.39	2.56	0.00	0.00	-17.87	-0.19
5 a	-4.41	2.31	0.00	0.00	-16.64	-0.23
5 b	0.88	0.93	0.00	0.00	-6.93	-0.52
5 c	1.77	0.52	0.00	0.00	-0.49	0.28
5 right	-8.76	2.37	0.00	0.00	-13.81	0.39
6 left	-5.10	2.61	0.00	0.00	-7.21	0.12
6 a	-4.28	2.43	0.00	0.00	-6.32	0.04
6 b	-0.39	1.53	0.00	0.00	-1.33	0.62
6 c	-0.18	1.48	0.00	0.00	-1.14	1.06
6 right	-6.34	2.82	0.00	0.00	-9.17	-0.15
7 left	-13.64	2.07	0.00	0.00	-15.05	1.26
7 a	-12.27	1.82	0.00	0.00	-12.87	1.09
8 a	-0.92	-0.47	0.00	0.00	-0.90	0.62
8 b	-0.42	-0.09	0.00	0.00	-0.77	0.63
11 top	-7.30	-4.04	0.00	0.00	-13.14	-3.95
11 a	-6.67	-3.50	0.00	0.00	-11.51	-3.53
11 b	-4.45	-1.51	0.00	0.00	-6.06	-1.98
12 top	3.66	-3.54	0.00	0.00	-18.67	-1.68
12 a	3.46	-3.04	0.00	0.00	-16.47	-1.46
12 b	2.73	-1.21	0.00	0.00	-8.96	-0.66
13 top	1.60	-3.78	0.00	0.00	-15.06	-3.62
13 a	1.26	-3.27	0.00	0.00	-13.21	-3.25
13 b	0.08	-1.36	0.00	0.00	-6.96	-1.89
14 top	-1.60	-3.78	0.00	0.00	-15.37	-2.30
14 a	-1.26	-3.27	0.00	0.00	-13.60	-2.03
14 b	-0.08	-1.36	0.00	0.00	-7.56	-1.05
15 top	-3.66	-3.54	0.00	0.00	-11.88	-3.12
15 a	-3.46	-3.04	0.00	0.00	-10.40	-2.79
15 b	-2.73	-1.21	0.00	0.00	-5.51	-1.59
16 top	7.30	-4.04	0.00	0.00	-8.55	-1.95
16 a	6.67	-3.50	0.00	0.00	-7.52	-1.73
16 b	4.45	-1.51	0.00	0.00	-4.22	-1.60

VEH: S1 - SPECIAL TR BRUG(5.75.44) page 61
date 10/09/2009; time 10:52:02
Cline Avenue - Load Rating-Triple Box-6 Webs-111'-4" Wide

Summary of the results (Maximum)

Section	--- Deadload ---		----- P.T. ------		--- Live load ---	
	Moment	Ax.Frc	Moment	Ax.Frc	Moment	Ax.Frc
1 a	-3.85	0.45	0.00	0.00	0.92	0.06
1 b	-12.27	1.82	0.00	0.00	0.03	0.16
1 right	-13.64	2.07	0.00	0.00	0.04	0.19
2 left	-6.34	2.82	0.00	0.00	0.25	0.20
2 a	-5.43	2.62	0.00	0.00	0.69	1.75
2 b	-0.74	1.59	0.00	0.00	4.61	-0.60
2 c	-0.18	1.48	0.00	0.00	5.82	-1.39
2 right	-5.10	2.61	0.00	0.00	1.99	0.82
3 left	-8.76	2.37	0.00	0.00	16.42	1.17
3 a	-7.59	2.13	0.00	0.00	16.21	0.97
3 b	-0.70	0.83	0.00	0.00	10.91	-0.01
3 c	1.77	0.52	0.00	0.00	7.41	0.04
3 right	-5.39	2.55	0.00	0.00	10.60	2.00
4 left	-6.99	2.15	0.00	0.00	2.12	1.02
4 a	-5.84	1.96	0.00	0.00	3.08	0.63
4 b	0.91	1.00	0.00	0.00	5.87	-0.34
4 c	2.45	0.92	0.00	0.00	6.33	-0.61
4 right	-6.99	2.15	0.00	0.00	2.12	1.02
5 left	-5.39	2.56	0.00	0.00	10.60	2.00
5 a	-4.41	2.31	0.00	0.00	10.76	1.96
5 b	0.88	0.93	0.00	0.00	8.36	0.99
5 c	1.77	0.52	0.00	0.00	7.41	0.04
5 right	-8.76	2.37	0.00	0.00	16.43	1.19
6 left	-5.10	2.61	0.00	0.00	1.99	0.82
6 a	-4.28	2.43	0.00	0.00	3.00	0.35
6 b	-0.39	1.53	0.00	0.00	5.86	-1.39
6 c	-0.18	1.48	0.00	0.00	5.82	-1.39
6 right	-6.34	2.82	0.00	0.00	0.25	0.20
7 left	-13.64	2.07	0.00	0.00	0.04	0.19
7 a	-12.27	1.82	0.00	0.00	0.03	0.16
8 a	-0.92	-0.47	0.00	0.00	1.93	-0.98
8 b	-0.42	-0.09	0.00	0.00	1.64	-0.50
11 top	-7.30	-4.04	0.00	0.00	8.60	-2.51
11 a	-6.67	-3.50	0.00	0.00	7.50	-2.22
11 b	-4.45	-1.51	0.00	0.00	4.10	-2.20
12 top	3.66	-3.54	0.00	0.00	12.17	-2.63
12 a	3.46	-3.04	0.00	0.00	10.65	-2.35
12 b	2.73	-1.21	0.00	0.00	5.70	-1.18
13 top	1.60	-3.78	0.00	0.00	17.90	-3.45
13 a	1.26	-3.27	0.00	0.00	15.69	-3.00
13 b	0.08	-1.36	0.00	0.00	8.61	-1.45
14 top	-1.60	-3.78	0.00	0.00	16.58	-3.31
14 a	-1.26	-3.27	0.00	0.00	14.53	-2.96
14 b	-0.08	-1.36	0.00	0.00	7.74	-1.58
15 top	-3.66	-3.54	0.00	0.00	22.32	-2.62
15 a	-3.46	-3.04	0.00	0.00	19.55	-2.24
15 b	-2.73	-1.21	0.00	0.00	10.51	-0.94
16 top	7.30	-4.04	0.00	0.00	12.86	-5.91
16 a	6.67	-3.50	0.00	0.00	11.01	-5.22
16 b	4.45	-1.51	0.00	0.00	5.43	-2.81

VEH: S1 - SPECIAL TR BRUG(5.75.44) page 62
date 10/09/2009; time 10:52:02
Cline Avenue - Load Rating-Triple Box-6 Webs-111'-4" Wide

Summary of the results (Minimum)

Section	--- Deadload ---		----- P.T. ------		--- Live load ---	
	Moment	Ax.Frc	Moment	Ax.Frc	Moment	Ax.Frc
1 a	-3.85	0.45	0.00	0.00	-2.12	0.13
1 b	-12.27	1.82	0.00	0.00	-13.39	0.98
1 right	-13.64	2.07	0.00	0.00	-16.43	1.23
2 left	-6.34	2.82	0.00	0.00	-10.17	-0.13
2 a	-5.43	2.62	0.00	0.00	-8.80	-0.57
2 b	-0.74	1.59	0.00	0.00	-1.13	-0.05
2 c	-0.18	1.48	0.00	0.00	-1.10	0.91
2 right	-5.10	2.61	0.00	0.00	-7.30	-0.09
3 left	-8.76	2.37	0.00	0.00	-15.10	0.49
3 a	-7.59	2.13	0.00	0.00	-14.05	0.44
3 b	-0.70	0.83	0.00	0.00	-6.11	0.49
3 c	1.77	0.52	0.00	0.00	-0.52	-0.12
3 right	-5.39	2.55	0.00	0.00	-20.57	-0.10
4 left	-6.99	2.15	0.00	0.00	-8.45	0.86
4 a	-5.84	1.96	0.00	0.00	-7.36	0.72
4 b	0.91	1.00	0.00	0.00	-1.74	0.62
4 c	2.45	0.92	0.00	0.00	-1.09	0.30
4 right	-6.99	2.15	0.00	0.00	-8.45	0.86
5 left	-5.39	2.56	0.00	0.00	-20.57	-0.10
5 a	-4.41	2.31	0.00	0.00	-19.24	-0.15
5 b	0.88	0.93	0.00	0.00	-8.85	-0.46
5 c	1.77	0.52	0.00	0.00	-0.52	-0.12
5 right	-8.76	2.37	0.00	0.00	-15.10	0.49
6 left	-5.10	2.61	0.00	0.00	-7.30	-0.09
6 a	-4.28	2.43	0.00	0.00	-6.34	-0.17
6 b	-0.39	1.53	0.00	0.00	-1.45	1.18
6 c	-0.18	1.48	0.00	0.00	-1.10	0.91
6 right	-6.34	2.82	0.00	0.00	-10.17	-0.13
7 left	-13.64	2.07	0.00	0.00	-16.37	1.34
7 a	-12.27	1.82	0.00	0.00	-13.34	1.06
8 a	-0.92	-0.47	0.00	0.00	-0.80	0.51
8 b	-0.42	-0.09	0.00	0.00	-0.69	0.51
11 top	-7.30	-4.04	0.00	0.00	-13.02	-5.84
11 a	-6.67	-3.50	0.00	0.00	-11.18	-5.15
11 b	-4.45	-1.51	0.00	0.00	-5.64	-2.74
12 top	3.66	-3.54	0.00	0.00	-22.32	-2.62
12 a	3.46	-3.04	0.00	0.00	-19.55	-2.24
12 b	2.73	-1.21	0.00	0.00	-10.51	-0.94
13 top	1.60	-3.78	0.00	0.00	-16.58	-3.31
13 a	1.26	-3.27	0.00	0.00	-14.53	-2.96
13 b	0.08	-1.36	0.00	0.00	-7.74	-1.58
14 top	-1.60	-3.78	0.00	0.00	-17.90	-3.45
14 a	-1.26	-3.27	0.00	0.00	-15.69	-3.00
14 b	-0.08	-1.36	0.00	0.00	-8.61	-1.45
15 top	-3.66	-3.54	0.00	0.00	-12.17	-2.63
15 a	-3.46	-3.04	0.00	0.00	-10.65	-2.35
15 b	-2.73	-1.21	0.00	0.00	-5.70	-1.18
16 top	7.30	-4.04	0.00	0.00	-8.60	-2.51
16 a	6.67	-3.50	0.00	0.00	-7.50	-2.22
16 b	4.45	-1.51	0.00	0.00	-4.10	-2.20

VEH: S2 - SPECIAL TR BRUG(5.75.44) page 61
date 10/09/2009; time 10:52:02
Cline Avenue - Load Rating - Triple Box - 6 Webs - 111'-4" W

Summary of the results (Maximum)

Section	--- Deadload ----		----- P.T. ------		--- Live load ---	
	Moment	Ax.Frc	Moment	Ax.Frc	Moment	Ax.Frc
1 a	-3.85	0.45	0.00	0.00	0.76	0.12
1 b	-12.27	1.82	0.00	0.00	0.05	0.15
1 right	-13.64	2.07	0.00	0.00	0.07	0.17
2 left	-6.34	2.82	0.00	0.00	0.25	0.20
2 a	-5.43	2.62	0.00	0.00	0.77	1.69
2 b	-0.74	1.59	0.00	0.00	4.44	-0.58
2 c	-0.18	1.48	0.00	0.00	5.60	-1.37
2 right	-5.10	2.61	0.00	0.00	2.17	0.75
3 left	-8.76	2.37	0.00	0.00	16.50	1.09
3 a	-7.59	2.13	0.00	0.00	16.14	0.91
3 b	-0.70	0.83	0.00	0.00	10.62	0.00
3 c	1.77	0.52	0.00	0.00	7.08	0.01
3 right	-5.39	2.55	0.00	0.00	10.74	1.90
4 left	-6.99	2.15	0.00	0.00	2.29	0.96
4 a	-5.84	1.96	0.00	0.00	3.12	0.57
4 b	0.91	1.00	0.00	0.00	5.69	-0.36
4 c	2.45	0.92	0.00	0.00	6.11	-0.63
4 right	-6.99	2.15	0.00	0.00	2.29	0.96
5 left	-5.39	2.56	0.00	0.00	10.74	1.90
5 a	-4.41	2.31	0.00	0.00	10.75	1.87
5 b	0.88	0.93	0.00	0.00	8.10	0.97
5 c	1.77	0.52	0.00	0.00	7.08	0.01
5 right	-8.76	2.37	0.00	0.00	16.52	1.11
6 left	-5.10	2.61	0.00	0.00	2.17	0.75
6 a	-4.28	2.43	0.00	0.00	3.04	0.29
6 b	-0.39	1.53	0.00	0.00	5.67	-1.37
6 c	-0.18	1.48	0.00	0.00	5.60	-1.37
6 right	-6.34	2.82	0.00	0.00	0.25	0.20
7 left	-13.64	2.07	0.00	0.00	0.07	0.17
7 a	-12.27	1.82	0.00	0.00	0.05	0.15
8 a	-0.92	-0.47	0.00	0.00	1.89	-0.98
8 b	-0.42	-0.09	0.00	0.00	1.61	-0.51
11 top	-7.30	-4.04	0.00	0.00	8.40	-2.24
11 a	-6.67	-3.50	0.00	0.00	7.36	-1.98
11 b	-4.45	-1.51	0.00	0.00	4.08	-1.93
12 top	3.66	-3.54	0.00	0.00	12.04	-2.49
12 a	3.46	-3.04	0.00	0.00	10.56	-2.23
12 b	2.73	-1.21	0.00	0.00	5.66	-1.27
13 top	1.60	-3.78	0.00	0.00	17.59	-2.94
13 a	1.26	-3.27	0.00	0.00	15.47	-2.54
13 b	0.08	-1.36	0.00	0.00	8.55	-1.20
14 top	-1.60	-3.78	0.00	0.00	16.40	-3.15
14 a	-1.26	-3.27	0.00	0.00	14.40	-2.83
14 b	-0.08	-1.36	0.00	0.00	7.68	-1.54
15 top	-3.66	-3.54	0.00	0.00	21.96	-2.12
15 a	-3.46	-3.04	0.00	0.00	19.29	-1.79
15 b	-2.73	-1.21	0.00	0.00	10.42	-0.69
16 top	7.30	-4.04	0.00	0.00	12.57	-5.25
16 a	6.67	-3.50	0.00	0.00	10.82	-4.61
16 b	4.45	-1.51	0.00	0.00	5.40	-2.46

VEH: S2 - SPECIAL TR BRUG(5.75.44) page 62
date 10/09/2009; time 10:52:02
Cline Avenue - Load Rating - Triple Box - 6 Webs - 111'-4" W

Summary of the results (Minimum)

Section	--- Deadload ----		----- P.T. ------		--- Live load ---	
	Moment	Ax.Frc	Moment	Ax.Frc	Moment	Ax.Frc
1 a	-3.85	0.45	0.00	0.00	-2.21	0.15
1 b	-12.27	1.82	0.00	0.00	-12.88	0.93
1 right	-13.64	2.07	0.00	0.00	-15.62	1.16
2 left	-6.34	2.82	0.00	0.00	-9.67	-0.16
2 a	-5.43	2.62	0.00	0.00	-8.40	-0.58
2 b	-0.74	1.59	0.00	0.00	-1.06	-0.06
2 c	-0.18	1.48	0.00	0.00	-1.09	0.88
2 right	-5.10	2.61	0.00	0.00	-6.99	-0.10
3 left	-8.76	2.37	0.00	0.00	-14.91	0.47
3 a	-7.59	2.13	0.00	0.00	-13.87	0.43
3 b	-0.70	0.83	0.00	0.00	-6.00	0.47
3 c	1.77	0.52	0.00	0.00	-0.52	-0.11
3 right	-5.39	2.55	0.00	0.00	-20.33	-0.10
4 left	-6.99	2.15	0.00	0.00	-8.13	0.82
4 a	-5.84	1.96	0.00	0.00	-7.09	0.70
4 b	0.91	1.00	0.00	0.00	-1.72	0.62
4 c	2.45	0.92	0.00	0.00	-1.08	0.30
4 right	-6.99	2.15	0.00	0.00	-8.13	0.82
5 left	-5.39	2.56	0.00	0.00	-20.33	-0.10
5 a	-4.41	2.31	0.00	0.00	-19.00	-0.15
5 b	0.88	0.93	0.00	0.00	-8.72	-0.45
5 c	1.77	0.52	0.00	0.00	-0.52	-0.11
5 right	-8.76	2.37	0.00	0.00	-14.91	0.47
6 left	-5.10	2.61	0.00	0.00	-6.99	-0.10
6 a	-4.28	2.43	0.00	0.00	-6.07	-0.18
6 b	-0.39	1.53	0.00	0.00	-1.44	1.17
6 c	-0.18	1.48	0.00	0.00	-1.09	0.88
6 right	-6.34	2.82	0.00	0.00	-9.67	-0.16
7 left	-13.64	2.07	0.00	0.00	-15.56	1.27
7 a	-12.27	1.82	0.00	0.00	-12.84	1.01
8 a	-0.92	-0.47	0.00	0.00	-0.78	0.50
8 b	-0.42	-0.09	0.00	0.00	-0.67	0.49
11 top	-7.30	-4.04	0.00	0.00	-12.73	-5.17
11 a	-6.67	-3.50	0.00	0.00	-10.99	-4.54
11 b	-4.45	-1.51	0.00	0.00	-5.60	-2.39
12 top	3.66	-3.54	0.00	0.00	-21.96	-2.12
12 a	3.46	-3.04	0.00	0.00	-19.29	-1.79
12 b	2.73	-1.21	0.00	0.00	-10.42	-0.69
13 top	1.60	-3.78	0.00	0.00	-16.40	-3.15
13 a	1.26	-3.27	0.00	0.00	-14.40	-2.83
13 b	0.08	-1.36	0.00	0.00	-7.68	-1.54
14 top	-1.60	-3.78	0.00	0.00	-17.59	-2.94
14 a	-1.26	-3.27	0.00	0.00	-15.47	-2.54
14 b	-0.08	-1.36	0.00	0.00	-8.55	-1.20
15 top	-3.66	-3.54	0.00	0.00	-12.04	-2.49
15 a	-3.46	-3.04	0.00	0.00	-10.56	-2.23
15 b	-2.73	-1.21	0.00	0.00	-5.66	-1.27
16 top	7.30	-4.04	0.00	0.00	-8.40	-2.24
16 a	6.67	-3.50	0.00	0.00	-7.36	-1.98
16 b	4.45	-1.51	0.00	0.00	-4.08	-1.93

VEH: S3 - SPECIAL TR BRUG(5.75.44) page 61
date 10/09/2009; time 10:52:03
Cline Avenue - Load Rating - Triple Box - 6 Webs - 111'-4" W

Summary of the results (Maximum)

Section	--- Deadload ----		----- P.T. ------		--- Live load ---	
	Moment	Ax.Frc	Moment	Ax.Frc	Moment	Ax.Frc
1 a	-3.85	0.45	0.00	0.00	0.71	0.18
1 b	-12.27	1.82	0.00	0.00	0.07	0.23
1 right	-13.64	2.07	0.00	0.00	0.09	0.26
2 left	-6.34	2.82	0.00	0.00	0.30	0.24
2 a	-5.43	2.62	0.00	0.00	1.33	2.25
2 b	-0.74	1.59	0.00	0.00	5.70	-0.67
2 c	-0.18	1.48	0.00	0.00	7.11	-1.72
2 right	-5.10	2.61	0.00	0.00	3.34	0.77
3 left	-8.76	2.37	0.00	0.00	21.31	1.43
3 a	-7.59	2.13	0.00	0.00	20.69	1.21
3 b	-0.70	0.83	0.00	0.00	13.41	0.07
3 c	1.77	0.52	0.00	0.00	8.92	0.05
3 right	-5.39	2.55	0.00	0.00	14.04	2.82
4 left	-6.99	2.15	0.00	0.00	3.49	1.28
4 a	-5.84	1.96	0.00	0.00	4.36	0.82
4 b	0.91	1.00	0.00	0.00	7.32	-0.18
4 c	2.45	0.92	0.00	0.00	7.76	-0.55
4 right	-6.99	2.15	0.00	0.00	3.49	1.28
5 left	-5.39	2.56	0.00	0.00	14.04	2.82
5 a	-4.41	2.31	0.00	0.00	13.89	2.63
5 b	0.88	0.93	0.00	0.00	10.23	1.46
5 c	1.77	0.52	0.00	0.00	8.92	0.05
5 right	-8.76	2.37	0.00	0.00	21.34	1.46
6 left	-5.10	2.61	0.00	0.00	3.34	0.77
6 a	-4.28	2.43	0.00	0.00	4.25	0.47
6 b	-0.39	1.53	0.00	0.00	7.29	-1.67
6 c	-0.18	1.48	0.00	0.00	7.11	-1.72
6 right	-6.34	2.82	0.00	0.00	0.30	0.24
7 left	-13.64	2.07	0.00	0.00	0.09	0.26
7 a	-12.27	1.82	0.00	0.00	0.07	0.23
8 a	-0.92	-0.47	0.00	0.00	2.54	-1.39
8 b	-0.42	-0.09	0.00	0.00	2.17	-0.78
11 top	-7.30	-4.04	0.00	0.00	11.40	-2.73
11 a	-6.67	-3.50	0.00	0.00	10.03	-2.41
11 b	-4.45	-1.51	0.00	0.00	5.59	-2.29
12 top	3.66	-3.54	0.00	0.00	16.01	-3.09
12 a	3.46	-3.04	0.00	0.00	14.09	-2.77
12 b	2.73	-1.21	0.00	0.00	7.61	-1.59
13 top	1.60	-3.78	0.00	0.00	22.91	-3.32
13 a	1.26	-3.27	0.00	0.00	20.22	-2.86
13 b	0.08	-1.36	0.00	0.00	11.25	-1.36
14 top	-1.60	-3.78	0.00	0.00	21.51	-3.93
14 a	-1.26	-3.27	0.00	0.00	18.93	-3.53
14 b	-0.08	-1.36	0.00	0.00	10.14	-2.09
15 top	-3.66	-3.54	0.00	0.00	28.45	-2.27
15 a	-3.46	-3.04	0.00	0.00	25.04	-1.91
15 b	-2.73	-1.21	0.00	0.00	13.62	-0.71
16 top	7.30	-4.04	0.00	0.00	17.04	-6.08
16 a	6.67	-3.50	0.00	0.00	14.78	-5.35
16 b	4.45	-1.51	0.00	0.00	7.53	-2.90

VEH: S3 - SPECIAL TR BRUG(5.75.44) page 62
date 10/09/2009; time 10:52:03
Cline Avenue - Load Rating - Triple Box - 6 Webs - 111'-4" W

Summary of the results (Minimum)

Section	--- Deadload ----		----- P.T. ------		--- Live load ---	
	Moment	Ax.Frc	Moment	Ax.Frc	Moment	Ax.Frc
1 a	-3.85	0.45	0.00	0.00	-3.21	0.24
1 b	-12.27	1.82	0.00	0.00	-16.77	1.23
1 right	-13.64	2.07	0.00	0.00	-20.02	1.49
2 left	-6.34	2.82	0.00	0.00	-12.40	-0.25
2 a	-5.43	2.62	0.00	0.00	-11.02	-0.76
2 b	-0.74	1.59	0.00	0.00	-1.52	0.01
2 c	-0.18	1.48	0.00	0.00	-1.47	1.17
2 right	-5.10	2.61	0.00	0.00	-9.02	-0.08
3 left	-8.76	2.37	0.00	0.00	-19.57	0.62
3 a	-7.59	2.13	0.00	0.00	-18.18	0.56
3 b	-0.70	0.83	0.00	0.00	-7.72	0.66
3 c	1.77	0.52	0.00	0.00	-0.68	-0.19
3 right	-5.39	2.55	0.00	0.00	-26.42	-0.18
4 left	-6.99	2.15	0.00	0.00	-10.46	1.17
4 a	-5.84	1.96	0.00	0.00	-9.07	0.70
4 b	0.91	1.00	0.00	0.00	-2.22	0.75
4 c	2.45	0.92	0.00	0.00	-1.42	0.42
4 right	-6.99	2.15	0.00	0.00	-10.46	1.17
5 left	-5.39	2.56	0.00	0.00	-26.42	-0.18
5 a	-4.41	2.31	0.00	0.00	-24.66	-0.24
5 b	0.88	0.93	0.00	0.00	-11.15	-0.66
5 c	1.77	0.52	0.00	0.00	-0.68	-0.19
5 right	-8.76	2.37	0.00	0.00	-19.57	0.62
6 left	-5.10	2.61	0.00	0.00	-9.02	-0.08
6 a	-4.28	2.43	0.00	0.00	-7.79	-0.29
6 b	-0.39	1.53	0.00	0.00	-1.88	1.51
6 c	-0.18	1.48	0.00	0.00	-1.47	1.17
6 right	-6.34	2.82	0.00	0.00	-12.40	-0.25
7 left	-13.64	2.07	0.00	0.00	-19.95	1.61
7 a	-12.27	1.82	0.00	0.00	-16.71	1.32
8 a	-0.92	-0.47	0.00	0.00	-1.12	0.69
8 b	-0.42	-0.09	0.00	0.00	-0.96	0.68
11 top	-7.30	-4.04	0.00	0.00	-17.23	-5.99
11 a	-6.67	-3.50	0.00	0.00	-14.99	-5.26
11 b	-4.45	-1.51	0.00	0.00	-7.78	-2.81
12 top	3.66	-3.54	0.00	0.00	-28.44	-2.27
12 a	3.46	-3.04	0.00	0.00	-25.04	-1.91
12 b	2.73	-1.21	0.00	0.00	-13.62	-0.71
13 top	1.60	-3.78	0.00	0.00	-21.51	-3.93
13 a	1.26	-3.27	0.00	0.00	-18.93	-3.53
13 b	0.08	-1.36	0.00	0.00	-10.14	-2.09
14 top	-1.60	-3.78	0.00	0.00	-22.91	-3.32
14 a	-1.26	-3.27	0.00	0.00	-20.22	-2.86
14 b	-0.08	-1.36	0.00	0.00	-11.25	-1.36
15 top	-3.66	-3.54	0.00	0.00	-16.01	-3.09
15 a	-3.46	-3.04	0.00	0.00	-14.09	-2.77
15 b	-2.73	-1.21	0.00	0.00	-7.61	-1.59
16 top	7.30	-4.04	0.00	0.00	-11.40	-2.73
16 a	6.67	-3.50	0.00	0.00	-10.03	-2.41
16 b	4.45	-1.51	0.00	0.00	-5.59	-2.29

VEH: S4 - SUPER LOAD BRUG(5.75.44) page 61
date 10/09/2009; time 10:52:04
Cline Avenue - Load Rating - Triple Box - 6 Webs - 111'-4" W

Summary of the results (Maximum)

Section	--- Deadload ----		----- P.T. ------		--- Live load ---	
	Moment	Ax.Frc	Moment	Ax.Frc	Moment	Ax.Frc
1 a	-3.85	0.45	0.00	0.00	0.48	0.06
1 b	-12.27	1.82	0.00	0.00	0.00	0.17
1 right	-13.64	2.07	0.00	0.00	0.00	0.19
2 left	-6.34	2.82	0.00	0.00	0.41	1.80
2 a	-5.43	2.62	0.00	0.00	1.27	1.50
2 b	-0.74	1.59	0.00	0.00	3.98	-0.59
2 c	-0.18	1.48	0.00	0.00	4.94	-1.36
2 right	-5.10	2.61	0.00	0.00	2.86	0.27
3 left	-8.76	2.37	0.00	0.00	17.65	0.82
3 a	-7.59	2.13	0.00	0.00	17.13	0.69
3 b	-0.70	0.83	0.00	0.00	10.58	-0.03
3 c	1.77	0.52	0.00	0.00	5.94	0.11
3 right	-5.39	2.55	0.00	0.00	11.82	1.83
4 left	-6.99	2.15	0.00	0.00	2.99	0.53
4 a	-5.84	1.96	0.00	0.00	3.55	0.37
4 b	0.91	1.00	0.00	0.00	5.25	-0.35
4 c	2.45	0.92	0.00	0.00	5.47	-0.59
4 right	-6.99	2.15	0.00	0.00	2.99	0.53
5 left	-5.39	2.56	0.00	0.00	11.82	1.83
5 a	-4.41	2.31	0.00	0.00	11.64	1.71
5 b	0.88	0.93	0.00	0.00	7.96	0.98
5 c	1.77	0.52	0.00	0.00	5.94	0.11
5 right	-8.76	2.37	0.00	0.00	17.65	0.82
6 left	-5.10	2.61	0.00	0.00	2.86	0.27
6 a	-4.28	2.43	0.00	0.00	3.46	0.07
6 b	-0.39	1.53	0.00	0.00	5.23	-1.40
6 c	-0.18	1.48	0.00	0.00	4.94	-1.36
6 right	-6.34	2.82	0.00	0.00	0.41	1.80
7 left	-13.64	2.07	0.00	0.00	0.00	0.19
7 a	-12.27	1.82	0.00	0.00	0.00	0.17
8 a	-0.92	-0.47	0.00	0.00	1.91	-0.99
8 b	-0.42	-0.09	0.00	0.00	1.64	-0.58
11 top	-7.30	-4.04	0.00	0.00	8.02	-1.95
11 a	-6.67	-3.50	0.00	0.00	7.06	-1.72
11 b	-4.45	-1.51	0.00	0.00	3.89	-0.89
12 top	3.66	-3.54	0.00	0.00	11.67	-2.08
12 a	3.46	-3.04	0.00	0.00	10.29	-1.86
12 b	2.73	-1.21	0.00	0.00	5.61	-1.07
13 top	1.60	-3.78	0.00	0.00	17.27	-2.06
13 a	1.26	-3.27	0.00	0.00	15.24	-1.79
13 b	0.08	-1.36	0.00	0.00	8.51	-0.83
14 top	-1.60	-3.78	0.00	0.00	16.21	-2.77
14 a	-1.26	-3.27	0.00	0.00	14.28	-2.49
14 b	-0.08	-1.36	0.00	0.00	7.69	-1.48
15 top	-3.66	-3.54	0.00	0.00	21.82	-1.21
15 a	-3.46	-3.04	0.00	0.00	19.22	-1.01
15 b	-2.73	-1.21	0.00	0.00	10.47	-0.31
16 top	7.30	-4.04	0.00	0.00	11.56	-4.09
16 a	6.67	-3.50	0.00	0.00	10.02	-3.63
16 b	4.45	-1.51	0.00	0.00	5.08	-1.99

VEH: S4 - SUPER LOAD BRUG(5.75.44) page 62
date 10/09/2009; time 10:52:04
Cline Avenue - Load Rating - Triple Box - 6 Webs - 111'-4" W

Summary of the results (Minimum)

Section	--- Deadload ----		----- P.T. ------		--- Live load ---	
	Moment	Ax.Frc	Moment	Ax.Frc	Moment	Ax.Frc
1 a	-3.85	0.45	0.00	0.00	-2.02	0.12
1 b	-12.27	1.82	0.00	0.00	-10.77	0.70
1 right	-13.64	2.07	0.00	0.00	-12.94	0.87
2 left	-6.34	2.82	0.00	0.00	-8.57	-0.51
2 a	-5.43	2.62	0.00	0.00	-7.64	-0.58
2 b	-0.74	1.59	0.00	0.00	-1.11	-0.07
2 c	-0.18	1.48	0.00	0.00	-1.12	0.95
2 right	-5.10	2.61	0.00	0.00	-5.52	-0.23
3 left	-8.76	2.37	0.00	0.00	-13.98	0.49
3 a	-7.59	2.13	0.00	0.00	-13.01	0.46
3 b	-0.70	0.83	0.00	0.00	-6.10	0.55
3 c	1.77	0.52	0.00	0.00	-0.52	-0.11
3 right	-5.39	2.55	0.00	0.00	-19.62	-0.13
4 left	-6.99	2.15	0.00	0.00	-6.72	0.52
4 a	-5.84	1.96	0.00	0.00	-5.95	0.33
4 b	0.91	1.00	0.00	0.00	-1.77	0.66
4 c	2.45	0.92	0.00	0.00	-1.10	0.23
4 right	-6.99	2.15	0.00	0.00	-6.72	0.52
5 left	-5.39	2.56	0.00	0.00	-19.62	-0.13
5 a	-4.41	2.31	0.00	0.00	-18.48	-0.35
5 b	0.88	0.93	0.00	0.00	-8.99	-0.41
5 c	1.77	0.52	0.00	0.00	-0.52	-0.11
5 right	-8.76	2.37	0.00	0.00	-13.98	0.49
6 left	-5.10	2.61	0.00	0.00	-5.52	-0.23
6 a	-4.28	2.43	0.00	0.00	-4.88	-0.30
6 b	-0.39	1.53	0.00	0.00	-1.47	1.22
6 c	-0.18	1.48	0.00	0.00	-1.12	0.95
6 right	-6.34	2.82	0.00	0.00	-8.57	-0.51
7 left	-13.64	2.07	0.00	0.00	-12.90	0.92
7 a	-12.27	1.82	0.00	0.00	-10.74	0.75
8 a	-0.92	-0.47	0.00	0.00	-0.78	0.52
8 b	-0.42	-0.09	0.00	0.00	-0.68	0.51
11 top	-7.30	-4.04	0.00	0.00	-11.73	-4.01
11 a	-6.67	-3.50	0.00	0.00	-10.20	-3.55
11 b	-4.45	-1.51	0.00	0.00	-5.29	-1.92
12 top	3.66	-3.54	0.00	0.00	-21.82	-1.21
12 a	3.46	-3.04	0.00	0.00	-19.22	-1.01
12 b	2.73	-1.21	0.00	0.00	-10.47	-0.31
13 top	1.60	-3.78	0.00	0.00	-16.21	-2.77
13 a	1.26	-3.27	0.00	0.00	-14.29	-2.49
13 b	0.08	-1.36	0.00	0.00	-7.69	-1.48
14 top	-1.60	-3.78	0.00	0.00	-17.26	-2.06
14 a	-1.26	-3.27	0.00	0.00	-15.24	-1.79
14 b	-0.08	-1.36	0.00	0.00	-8.51	-0.84
15 top	-3.66	-3.54	0.00	0.00	-11.67	-2.08
15 a	-3.46	-3.04	0.00	0.00	-10.29	-1.86
15 b	-2.73	-1.21	0.00	0.00	-5.61	-1.07
16 top	7.30	-4.04	0.00	0.00	-8.02	-1.95
16 a	6.67	-3.50	0.00	0.00	-7.06	-1.72
16 b	4.45	-1.51	0.00	0.00	-3.89	-0.89

VEH: S5 - SUPERLOAD BRUG(5.75.44) page 61
date 10/09/2009; time 10:52:04
Cline Avenue - Load Rating - Triple Box - 6 Webs - 111'-4" W

Summary of the results (Maximum)

Section	--- Deadload ---- Moment	Ax.Frc	----- P.T. ------ Moment	Ax.Frc	--- Live load --- Moment	Ax.Frc
1 a	-3.85	0.45	0.00	0.00	0.85	0.14
1 b	-12.27	1.82	0.00	0.00	0.06	0.18
1 right	-13.64	2.07	0.00	0.00	0.08	0.21
2 left	-6.34	2.82	0.00	0.00	0.33	0.26
2 a	-5.43	2.62	0.00	0.00	1.10	2.02
2 b	-0.74	1.59	0.00	0.00	5.38	-0.78
2 c	-0.18	1.48	0.00	0.00	6.78	-1.78
2 right	-5.10	2.61	0.00	0.00	2.94	0.75
3 left	-8.76	2.37	0.00	0.00	21.78	1.24
3 a	-7.59	2.13	0.00	0.00	21.21	1.02
3 b	-0.70	0.83	0.00	0.00	13.58	-0.05
3 c	1.77	0.52	0.00	0.00	8.42	0.02
3 right	-5.39	2.55	0.00	0.00	14.31	2.37
4 left	-6.99	2.15	0.00	0.00	3.11	1.02
4 a	-5.84	1.96	0.00	0.00	4.05	0.56
4 b	0.91	1.00	0.00	0.00	6.99	-0.59
4 c	2.45	0.92	0.00	0.00	7.45	-0.92
4 right	-6.99	2.15	0.00	0.00	3.11	1.02
5 left	-5.39	2.56	0.00	0.00	14.31	2.37
5 a	-4.41	2.31	0.00	0.00	14.23	2.18
5 b	0.88	0.93	0.00	0.00	10.28	1.15
5 c	1.77	0.52	0.00	0.00	8.42	0.02
5 right	-8.76	2.37	0.00	0.00	21.78	1.24
6 left	-5.10	2.61	0.00	0.00	2.94	0.75
6 a	-4.28	2.43	0.00	0.00	3.95	0.19
6 b	-0.39	1.53	0.00	0.00	6.97	-1.83
6 c	-0.18	1.48	0.00	0.00	6.78	-1.78
6 right	-6.34	2.82	0.00	0.00	0.33	0.26
7 left	-13.64	2.07	0.00	0.00	0.08	0.21
7 a	-12.27	1.82	0.00	0.00	0.06	0.18
8 a	-0.92	-0.47	0.00	0.00	2.38	-1.20
8 b	-0.42	-0.09	0.00	0.00	2.03	-0.64
11 top	-7.30	-4.04	0.00	0.00	10.23	-2.66
11 a	-6.67	-3.50	0.00	0.00	8.98	-2.35
11 b	-4.45	-1.51	0.00	0.00	4.98	-2.28
12 top	3.66	-3.54	0.00	0.00	14.99	-3.00
12 a	3.46	-3.04	0.00	0.00	13.17	-2.69
12 b	2.73	-1.21	0.00	0.00	7.11	-1.50
13 top	1.60	-3.78	0.00	0.00	22.18	-3.26
13 a	1.26	-3.27	0.00	0.00	19.53	-2.81
13 b	0.08	-1.36	0.00	0.00	10.84	-1.32
14 top	-1.60	-3.78	0.00	0.00	20.72	-3.58
14 a	-1.26	-3.27	0.00	0.00	18.24	-3.22
14 b	-0.08	-1.36	0.00	0.00	9.74	-2.01
15 top	-3.66	-3.54	0.00	0.00	27.91	-2.18
15 a	-3.46	-3.04	0.00	0.00	24.53	-1.83
15 b	-2.73	-1.21	0.00	0.00	13.30	-0.66
16 top	7.30	-4.04	0.00	0.00	15.11	-6.10
16 a	6.67	-3.50	0.00	0.00	13.03	-5.36
16 b	4.45	-1.51	0.00	0.00	6.51	-2.88

VEH: S5 - SUPERLOAD BRUG(5.75.44) page 62
date 10/09/2009; time 10:52:04
Cline Avenue - Load Rating - Triple Box - 6 Webs - 111'-4" W

Summary of the results (Minimum)

Section	--- Deadload ---- Moment	Ax.Frc	----- P.T. ------ Moment	Ax.Frc	--- Live load --- Moment	Ax.Frc
1 a	-3.85	0.45	0.00	0.00	-2.67	0.17
1 b	-12.27	1.82	0.00	0.00	-15.21	1.05
1 right	-13.64	2.07	0.00	0.00	-18.40	1.31
2 left	-6.34	2.82	0.00	0.00	-11.51	-0.25
2 a	-5.43	2.62	0.00	0.00	-10.12	-0.74
2 b	-0.74	1.59	0.00	0.00	-1.27	-0.13
2 c	-0.18	1.48	0.00	0.00	-1.40	1.18
2 right	-5.10	2.61	0.00	0.00	-8.03	-0.22
3 left	-8.76	2.37	0.00	0.00	-18.45	0.61
3 a	-7.59	2.13	0.00	0.00	-17.27	0.57
3 b	-0.70	0.83	0.00	0.00	-7.71	0.61
3 c	1.77	0.52	0.00	0.00	-0.66	-0.12
3 right	-5.39	2.55	0.00	0.00	-25.61	-0.21
4 left	-6.99	2.15	0.00	0.00	-9.53	0.94
4 a	-5.84	1.96	0.00	0.00	-8.28	0.57
4 b	0.91	1.00	0.00	0.00	-2.22	0.87
4 c	2.45	0.92	0.00	0.00	-1.38	0.33
4 right	-6.99	2.15	0.00	0.00	-9.53	0.94
5 left	-5.39	2.56	0.00	0.00	-25.60	-0.21
5 a	-4.41	2.31	0.00	0.00	-24.05	-0.26
5 b	0.88	0.93	0.00	0.00	-11.28	-0.53
5 c	1.77	0.52	0.00	0.00	-0.66	-0.12
5 right	-8.76	2.37	0.00	0.00	-18.45	0.61
6 left	-5.10	2.61	0.00	0.00	-8.03	-0.22
6 a	-4.28	2.43	0.00	0.00	-6.94	-0.34
6 b	-0.39	1.53	0.00	0.00	-1.85	1.52
6 c	-0.18	1.48	0.00	0.00	-1.40	1.18
6 right	-6.34	2.82	0.00	0.00	-11.51	-0.25
7 left	-13.64	2.07	0.00	0.00	-18.33	1.43
7 a	-12.27	1.82	0.00	0.00	-15.16	1.14
8 a	-0.92	-0.47	0.00	0.00	-0.94	0.62
8 b	-0.42	-0.09	0.00	0.00	-0.82	0.62
11 top	-7.30	-4.04	0.00	0.00	-15.32	-6.00
11 a	-6.67	-3.50	0.00	0.00	-13.25	-5.27
11 b	-4.45	-1.51	0.00	0.00	-6.78	-2.78
12 top	3.66	-3.54	0.00	0.00	-27.91	-2.18
12 a	3.46	-3.04	0.00	0.00	-24.53	-1.83
12 b	2.73	-1.21	0.00	0.00	-13.30	-0.66
13 top	1.60	-3.78	0.00	0.00	-20.72	-3.58
13 a	1.26	-3.27	0.00	0.00	-18.24	-3.22
13 b	0.08	-1.36	0.00	0.00	-9.74	-2.01
14 top	-1.60	-3.78	0.00	0.00	-22.18	-3.26
14 a	-1.26	-3.27	0.00	0.00	-19.53	-2.81
14 b	-0.08	-1.36	0.00	0.00	-10.83	-1.32
15 top	-3.66	-3.54	0.00	0.00	-15.00	-3.00
15 a	-3.46	-3.04	0.00	0.00	-13.17	-2.69
15 b	-2.73	-1.21	0.00	0.00	-7.11	-1.50
16 top	7.30	-4.04	0.00	0.00	-10.23	-2.66
16 a	6.67	-3.50	0.00	0.00	-8.98	-2.35
16 b	4.45	-1.51	0.00	0.00	-4.98	-2.28

4.3.4 Brug Input Striped Lanes

1I_A_SL_HL93_truck_EL.txt 9/11/2009

```
* start ; column 11-30 can be used to have your own text on the top of each page
*   5   10   15   20   25   30   35   40   45   50   55   60   65   70   75   80
*   V    V    V    V    V    V    V    V    V    V    V    V    V    V    V    V
00001  1 1     VEH: HL93- TRUCK - SINGLE TRUCK
* code 1001
Cline Avenue - Striped Lanes - Triple Box - 6 Webs - 111'-4" Wide
* code 1002
    2         1
* code 1003
*   5   10   15   20   25   30   35   40   45   50   55   60   65   70   75   80
*   V    V    V    V    V    V    V    V    V    V    V    V    V    V    V    V
250.0     168.0     111.33    1.0       1.0       1.3
* code 1004
    1    0    3
* code 1005
   72    1
* code 1005a
* location traffic lanes
17.667
* maximum and minimum truck
15.417    95.917    10.000
* code 1007, linear loads
0.7350    0.441
55.665    0.992
110.5983  0.441
* code 1201
   14    6    7    3    6
* code 1202 coordinates
0.0000    0.0
11.0000   0.0
11.0000   -7.938
26.8333   0.0
26.8333   -7.938
47.7500   0.0
47.7500   -7.938
63.5833   0.0
63.5833   -7.938
84.5000   0.0
84.5000   -7.938
100.3333  0.0
100.3333  -7.938
111.33    0.0
* code 1203 - profile 1
    5    2    4
0.0000    0.750
5.417     0.750
7.917     1.208
10.417    1.667
11.000    1.667
* code 1203 - profile 2
    7    2    3    4
0.000     1.667
0.583     1.667
5.583     0.750
7.917     0.750
10.2500   0.750
15.250    1.667
15.833    1.667
* code 1203 - profile 3
    7    2    3    4
0.000     1.667
0.583     1.667
5.583     0.750
10.458    0.750
15.333    0.750
20.333    1.667
20.917    1.667
* code 1203 - profile 4
    5    2    3    4
0.000     1.667
0.583     1.667
3.083     1.208
5.583     0.750
11.000    0.750
* code 1203 - profile 5
    7    2    3    4
0.000     1.458
0.583     1.458
1.583     0.458
7.917     0.458
14.2500   0.458
```

1I_A_SL_HL93_truck_EL.txt 9/11/2009

```
15.250    1.458
15.833    1.458
* code 1203 - profile 6
    5    2    3
0.000     1.167
0.833     1.167
3.771     1.167
6.708     1.167
7.938     1.167
* code 1204 - assembling boxgirder
    1    2    1
    2    4    2
    4    6    3
    6    8    2
    8   10    3
   10   12    2
   12   14    4
    3    5    5
    7    9    5
   11   13    5
    2    3    6
    4    5    6
    6    7    6
    8    9    6
   10   11    6
   12   13    6
* code 1205 control code
    1    2   13    1    1    0    4    3     1.0       1.0
* code 1206 wheels/axle
       0.0
       1.5
       6.0
       7.5 0.833
* code 1207 definition axles
0.0       0.1
14.0      0.4
28.0      0.4
* code 1208 - accuracy
0.00001   0.00001   0.00001   .00001    .00001
* code 1209 number sections
   50
   1A   1B   1R   2L   2A   2B   2C   2R   3L   3A   3B   3C   3R   4L
   4A   4B   4C   4R   5L   5A   5B   5C   5R   6L   6A   6B   6C   6R
   7L   7A   8A   8B  11L  11A  11B  12L  12A  12B  13L  13A  13B  14L
  14A  14B  15L  15A  15B  16L  16A  16B
* code 1210 - density conrete
0.156
* code 1211 - extra forces selfweight

* code 1212 - surcharge
2.7833
* code 1213 - Prestressing Layout - NONE
```

1I_A_SL_HL93_tandem_EL.txt 9/11/2009

```
* start ; column 11-30 can be used to have your own text on the top of each page
*   5   10   15   20   25   30   35   40   45   50   55   60   65   70   75   80
*   V    V    V    V    V    V    V    V    V    V    V    V    V    V    V    V
00001  1 1     VEH: HL93- TANDEM - SINGLE TRUCK
* code 1001
Cline Avenue - Striped Lanes - Triple Box - 6 Webs - 111'-4" Wide
* code 1002
    2         1
* code 1003
*   5   10   15   20   25   30   35   40   45   50   55   60   65   70   75   80
*   V    V    V    V    V    V    V    V    V    V    V    V    V    V    V    V
250.0     168.0     111.33    1.0       1.0       1.3
* code 1004
    1    0    3
* code 1005
   50    1
* code 1005a
* location traffic lanes
17.667
* maximum and minimum truck
15.417    95.917    10.000
* code 1007, linear loads
0.7350    0.441
55.665    0.992
110.5983  0.441
* code 1201
   14    6    7    3    6
* code 1202 coordinates
0.0000    0.0
11.0000   0.0
11.0000   -7.938
26.8333   0.0
26.8333   -7.938
47.7500   0.0
47.7500   -7.938
63.5833   0.0
63.5833   -7.938
84.5000   0.0
84.5000   -7.938
100.3333  0.0
100.3333  -7.938
111.33    0.0
* code 1203 - profile 1
    5    2    4
0.0000    0.750
5.417     0.750
7.917     1.208
10.417    1.667
11.000    1.667
* code 1203 - profile 2
    7    2    3    4
0.000     1.667
0.583     1.667
5.583     0.750
7.917     0.750
10.2500   0.750
15.250    1.667
15.833    1.667
* code 1203 - profile 3
    7    2    3    4
0.000     1.667
0.583     1.667
5.583     0.750
10.458    0.750
15.333    0.750
20.333    1.667
20.917    1.667
* code 1203 - profile 4
    5    2    3    4
0.000     1.667
0.583     1.667
3.083     1.208
5.583     0.750
11.000    0.750
* code 1203 - profile 5
    7    2    3    4
0.000     1.458
0.583     1.458
1.583     0.458
7.917     0.458
14.2500   0.458
```

1I_A_SL_HL93_tandem_EL.txt 9/11/2009

```
15.250    1.458
15.833    1.458
* code 1203 - profile 6
    5    2    3
0.000     1.167
0.833     1.167
3.771     1.167
6.708     1.167
7.938     1.167
* code 1204 - assembling boxgirder
    1    2    1
    2    4    2
    4    6    3
    6    8    2
    8   10    3
   10   12    2
   12   14    4
    3    5    5
    7    9    5
   11   13    5
    2    3    6
    4    5    6
    6    7    6
    8    9    6
   10   11    6
   12   13    6
* code 1205 control code
    1    2   13    1    1    0    4    2     1.0       1.0
* code 1206 wheels/axle
       0.0
       1.5
       6.0
       7.5 0.833
* code 1207 definition axles
0.0       0.5
4.0       0.5
* code 1208 - accuracy
0.00001   0.00001   0.00001   .00001    .00001
* code 1209 number sections
   50
   1A   1B   1R   2L   2A   2B   2C   2R   3L   3A   3B   3C   3R   4L
   4A   4B   4C   4R   5L   5A   5B   5C   5R   6L   6A   6B   6C   6R
   7L   7A   8A   8B  11L  11A  11B  12L  12A  12B  13L  13A  13B  14L
  14A  14B  15L  15A  15B  16L  16A  16B
* code 1210 - density conrete
0.156
* code 1211 - extra forces selfweight

* code 1212 - surcharge
2.7833
* code 1213 - Prestressing Layout - NONE
```

```
* start ; column 11-30 can be used to have your own text on the top of each page
00001    0    0
* code 1001
Cline Avenue - Striped Lanes - Triple Box - 6 Webs - 111'-4" Wide
* code 1002
    2         1
* code 1003
*   5   10   15   20   25   30   35   40   45   50   55   60   65   70   75   80
*   V    V    V    V    V    V    V    V    V    V    V    V    V    V    V    V
250.0     168.0     111.33    1.0       1.0       1.3
* code 1004
    2    0    3
* code 1005
   72
* code 1005a
* location traffic lanes
17.667    29.667
* maximum and minimum truck
15.417    95.917    10.000
* code 1007, linear loads
0.7350    0.441
55.665    0.992
110.5983  0.441
* code 1201
   14    6    7    3    6
* code 1202 coordinates
0.0000    0.0
11.0000   0.0
11.0000   -7.938
26.8333   0.0
26.8333   -7.938
47.7500   0.0
47.7500   -7.938
63.5833   0.0
63.5833   -7.938
84.5000   0.0
84.5000   -7.938
100.3333  0.0
100.3333  -7.938
111.33    0.0
* code 1203 - profile 1
    5    2    4
0.0000    0.750
5.417     0.750
7.917     1.208
10.417    1.667
11.000    1.667
* code 1203 - profile 2
    7    2    3    4
0.000     1.667
0.583     1.667
5.583     0.750
7.917     0.750
10.2500   0.750
15.250    1.667
15.833    1.667
* code 1203 - profile 3
    7    2    3    4
0.000     1.667
0.583     1.667
5.583     0.750
10.458    0.750
15.333    0.750
20.333    1.667
20.917    1.667
* code 1203 - profile 4
    5    2    3    4
0.000     1.667
0.583     1.667
3.083     1.208
5.583     0.750
11.000    0.750
* code 1203 - profile 5
    7    2    3    4
0.000     1.458
0.583     1.458
1.583     0.458
7.917     0.458
14.2500   0.458
15.250    1.458
15.833    1.458
```

```
I_A_SL_HL93_truck_EL.txt                                                    9/11/2009

* code 1203 - profile 6
    5    2    3
0.000     1.167
0.833     1.167
3.771     1.167
6.708     1.167
7.938     1.167
* code 1204 - assembling boxgirder
    1    2    1
    2    4    2
    4    6    3
    6    8    2
    8   10    3
   10   12    2
   12   14    4
    3    5    5
    7    9    5
   11   13    5
    2    3    6
    4    5    6
    6    7    6
    8    9    6
   10   11    6
   12   13    6
* code 1205 control code
    1    2   13    1    1    0    4    3     1.0       1.0
* code 1206 wheels/axle
       0.0
       1.5
       6.0
       7.5 0.833
* code 1207 definition axles
0.0       0.1
14.0      0.4
28.0      0.4
* code 1208 - accuracy
0.00001   0.00001   0.00001   .00001    .00001
* code 1209 number sections
   50
   1A   1B   1R   2L   2A   2B   2C   2R   3L   3A   3B   3C   3R   4L
   4A   4B   4C   4R   5L   5A   5B   5C   5R   6L   6A   6B   6C   6R
   7L   7A   8A   8B  11L  11A  11B  12L  12A  12B  13L  13A  13B  14L
  14A  14B  15L  15A  15B  16L  16A  16B
* code 1210 - density conrete
0.156
* code 1211 - extra forces selfweight

* code 1212 - surcharge
2.7833
* code 1213 - Prestressing Layout - NONE
```

```
* start ; column 11-30 can be used to have your own text on the top of each page
*   5   10   15   20   25   30   35   40   45   50   55   60   65   70   75   80
*   V    V    V    V    V    V    V    V    V    V    V    V    V    V    V    V
00001  1 1     VEH: HL93- TANDEM
* code 1001
Cline Avenue - Striped Lanes - Triple Box - 6 Webs - 111'-4" Wide
* code 1002
    2         1
* code 1003
*   5   10   15   20   25   30   35   40   45   50   55   60   65   70   75   80
*   V    V    V    V    V    V    V    V    V    V    V    V    V    V    V    V
250.0     168.0     111.33    1.0       1.0       1.3
* code 1004
    2    0    3
* code 1005
   50
* code 1005a
* location traffic lanes
17.667    29.667
* maximum and minimum truck
15.417    95.917    10.000
* code 1007, linear loads
0.7350    0.441
55.665    0.992
110.5983  0.441
* code 1201
   14    6    7    3    6
* code 1202 coordinates
0.0000    0.0
11.0000   0.0
11.0000   -7.938
26.8333   0.0
26.8333   -7.938
47.7500   0.0
47.7500   -7.938
63.5833   0.0
63.5833   -7.938
84.5000   0.0
84.5000   -7.938
100.3333  0.0
100.3333  -7.938
111.33    0.0
* code 1203 - profile 1
    5    2    4
0.0000    0.750
5.417     0.750
7.917     1.208
10.417    1.667
11.000    1.667
* code 1203 - profile 2
    7    2    3    4
0.000     1.667
0.583     1.667
5.583     0.750
7.917     0.750
10.2500   0.750
15.250    1.667
15.833    1.667
* code 1203 - profile 3
    7    2    3    4
0.000     1.667
0.583     1.667
5.583     0.750
10.458    0.750
15.333    0.750
20.333    1.667
20.917    1.667
* code 1203 - profile 4
    5    2    3    4
0.000     1.667
0.583     1.667
3.083     1.208
5.583     0.750
11.000    0.750
* code 1203 - profile 5
    7    2    3    4
0.000     1.458
0.583     1.458
1.583     0.458
7.917     0.458
14.2500   0.458
```

I_A_SL_HL93_tandem_EL.txt 9/11/2009

```
15.250    1.458
15.833    1.458
* code 1203 - profile 6
    5    2    3
0.000     1.167
0.833     1.167
3.771     1.167
6.708     1.167
7.938     1.167
* code 1204 - assembling boxgirder
    1    2    1
    2    4    2
    4    6    3
    6    8    2
    8   10    3
   10   12    2
   12   14    4
    3    5    5
    7    9    5
   11   13    5
    2    3    6
    4    5    6
    6    7    6
    8    9    6
   10   11    6
   12   13    6
* code 1205 control code
    1    2   13    1    1    0    4    2     1.0       1.0
* code 1206 wheels/axle
       0.0
       1.5
       6.0
       7.5 0.833
* code 1207 definition axles
0.0       0.5
4.0       0.5
* code 1208 - accuracy
0.00001   0.00001   0.00001   .00001    .00001
* code 1209 number sections
   50
   1A   1B   1R   2L   2A   2B   2C   2R   3L   3A   3B   3C   3R   4L
   4A   4B   4C   4R   5L   5A   5B   5C   5R   6L   6A   6B   6C   6R
   7L   7A   8A   8B  11L  11A  11B  12L  12A  12B  13L  13A  13B  14L
  14A  14B  15L  15A  15B  16L  16A  16B
* code 1210 - density conrete
0.156
* code 1211 - extra forces selfweight

* code 1212 - surcharge
2.7833
* code 1213 - Prestressing Layout - NONE
```

4.3.5 Brug Output Striped Lanes (Summary)

1I_A_SL_HL93_truck_EL.OUT 9/11/2009

VEH: HL93- TRUCK - S BRUG(5.75.44) page 61
date 11/09/2009; time 14:41:32
Cline Avenue - Striped Lanes - Triple Box - 6 Webs - 111'-4"

Summary of the results (Maximum)

Section	--- Deadload ---		----- P.T. ------		--- Live load ---	
	Moment	Ax.Frc	Moment	Ax.Frc	Moment	Ax.Frc
1 a	-3.85	0.45	0.00	0.00	0.01	0.02
1 b	-12.27	1.82	0.00	0.00	0.07	0.09
1 right	-13.64	2.07	0.00	0.00	0.09	0.11
2 left	-6.34	2.82	0.00	0.00	0.07	0.03
2 a	-5.43	2.62	0.00	0.00	0.01	0.00
2 b	-0.74	1.59	0.00	0.00	3.09	-0.46
2 c	-0.18	1.48	0.00	0.00	4.21	-0.47
2 right	-5.10	2.61	0.00	0.00	0.38	1.39
3 left	-8.76	2.37	0.00	0.00	2.97	1.13
3 a	-7.59	2.13	0.00	0.00	3.64	0.85
3 b	-0.70	0.83	0.00	0.00	4.84	0.07
3 c	1.77	0.52	0.00	0.00	5.23	-0.04
3 right	-5.39	2.55	0.00	0.00	1.84	1.47
4 left	-6.99	2.15	0.00	0.00	0.26	-0.28
4 a	-5.84	1.96	0.00	0.00	1.52	1.25
4 b	0.91	1.00	0.00	0.00	4.14	0.18
4 c	2.45	0.92	0.00	0.00	4.29	-0.12
4 right	-6.99	2.15	0.00	0.00	0.26	-0.28
5 left	-5.39	2.56	0.00	0.00	1.84	1.47
5 a	-4.41	2.31	0.00	0.00	2.57	1.18
5 b	0.88	0.93	0.00	0.00	4.32	0.33
5 c	1.77	0.52	0.00	0.00	5.23	-0.04
5 right	-8.76	2.37	0.00	0.00	2.97	1.13
6 left	-5.10	2.61	0.00	0.00	0.38	1.39
6 a	-4.28	2.43	0.00	0.00	1.72	0.87
6 b	-0.39	1.53	0.00	0.00	4.14	-0.16
6 c	-0.18	1.48	0.00	0.00	4.21	-0.47
6 right	-6.34	2.82	0.00	0.00	0.07	0.03
7 left	-13.64	2.07	0.00	0.00	0.09	0.11
7 a	-12.27	1.82	0.00	0.00	0.07	0.09
8 a	-0.92	-0.47	0.00	0.00	0.34	0.38
8 b	-0.42	-0.09	0.00	0.00	0.30	0.52
11 top	-7.30	-4.04	0.00	0.00	4.74	-1.92
11 a	-6.67	-3.50	0.00	0.00	4.06	-1.67
11 b	-4.45	-1.51	0.00	0.00	2.16	-0.83
12 top	3.66	-3.54	0.00	0.00	5.67	-3.31
12 a	3.46	-3.04	0.00	0.00	4.72	-2.85
12 b	2.73	-1.21	0.00	0.00	2.28	-1.37
13 top	1.60	-3.78	0.00	0.00	6.60	-1.67
13 a	1.26	-3.27	0.00	0.00	5.70	-1.44
13 b	0.08	-1.36	0.00	0.00	3.04	-0.68
14 top	-1.60	-3.78	0.00	0.00	6.55	-3.46
14 a	-1.26	-3.27	0.00	0.00	5.49	-2.98
14 b	-0.08	-1.36	0.00	0.00	2.67	-0.83
15 top	-3.66	-3.54	0.00	0.00	7.56	-1.51
15 a	-3.46	-3.04	0.00	0.00	6.54	-1.30
15 b	-2.73	-1.21	0.00	0.00	3.46	-0.58
16 top	7.30	-4.04	0.00	0.00	0.02	0.01
16 a	6.67	-3.50	0.00	0.00	0.02	0.01
16 b	4.45	-1.51	0.00	0.00	0.03	0.02

1I_A_SL_HL93_truck_EL.OUT 9/11/2009

VEH: HL93- TRUCK - S BRUG(5.75.44) page 62
date 11/09/2009; time 14:41:32
Cline Avenue - Striped Lanes - Triple Box - 6 Webs - 111'-4"

Summary of the results (Minimum)

Section	--- Deadload ---		----- P.T. ------		--- Live load ---	
	Moment	Ax.Frc	Moment	Ax.Frc	Moment	Ax.Frc
1 a	-3.85	0.45	0.00	0.00	-0.08	0.09
1 b	-12.27	1.82	0.00	0.00	-1.08	0.51
1 right	-13.64	2.07	0.00	0.00	-1.59	0.65
2 left	-6.34	2.82	0.00	0.00	-6.29	-0.13
2 a	-5.43	2.62	0.00	0.00	-5.55	-0.20
2 b	-0.74	1.59	0.00	0.00	-0.77	-0.36
2 c	-0.18	1.48	0.00	0.00	-0.42	0.29
2 right	-5.10	2.61	0.00	0.00	-5.64	-0.48
3 left	-8.76	2.37	0.00	0.00	-7.81	0.30
3 a	-7.59	2.13	0.00	0.00	-6.47	0.27
3 b	-0.70	0.83	0.00	0.00	-2.27	-0.02
3 c	1.77	0.52	0.00	0.00	-0.19	-0.09
3 right	-5.39	2.55	0.00	0.00	-8.92	0.35
4 left	-6.99	2.15	0.00	0.00	-5.86	0.04
4 a	-5.84	1.96	0.00	0.00	-5.17	-0.02
4 b	0.91	1.00	0.00	0.00	-0.61	-0.09
4 c	2.45	0.92	0.00	0.00	-0.38	0.22
4 right	-6.99	2.15	0.00	0.00	-5.86	0.04
5 left	-5.39	2.56	0.00	0.00	-8.92	0.35
5 a	-4.41	2.31	0.00	0.00	-7.52	0.36
5 b	0.88	0.93	0.00	0.00	-2.81	-0.15
5 c	1.77	0.52	0.00	0.00	-0.19	-0.09
5 right	-8.76	2.37	0.00	0.00	-7.81	0.30
6 left	-5.10	2.61	0.00	0.00	-5.64	-0.48
6 a	-4.28	2.43	0.00	0.00	-4.75	-0.58
6 b	-0.39	1.53	0.00	0.00	-0.37	-0.54
6 c	-0.18	1.48	0.00	0.00	-0.42	0.29
6 right	-6.34	2.82	0.00	0.00	-6.29	-0.13
7 left	-13.64	2.07	0.00	0.00	-1.59	0.65
7 a	-12.27	1.82	0.00	0.00	-1.08	0.51
8 a	-0.92	-0.47	0.00	0.00	-0.35	0.28
8 b	-0.42	-0.09	0.00	0.00	-0.30	0.29
11 top	-7.30	-4.04	0.00	0.00	-0.02	0.01
11 a	-6.67	-3.50	0.00	0.00	-0.02	0.01
11 b	-4.45	-1.51	0.00	0.00	-0.03	0.02
12 top	3.66	-3.54	0.00	0.00	-7.56	-1.51
12 a	3.46	-3.04	0.00	0.00	-6.54	-1.30
12 b	2.73	-1.21	0.00	0.00	-3.46	-0.58
13 top	1.60	-3.78	0.00	0.00	-6.55	-3.46
13 a	1.26	-3.27	0.00	0.00	-5.49	-2.98
13 b	0.08	-1.36	0.00	0.00	-2.67	-0.83
14 top	-1.60	-3.78	0.00	0.00	-6.60	-1.67
14 a	-1.26	-3.27	0.00	0.00	-5.70	-1.45
14 b	-0.08	-1.36	0.00	0.00	-3.04	-0.68
15 top	-3.66	-3.54	0.00	0.00	-5.67	-3.31
15 a	-3.46	-3.04	0.00	0.00	-4.72	-2.85
15 b	-2.73	-1.21	0.00	0.00	-2.28	-1.37
16 top	7.30	-4.04	0.00	0.00	-4.74	-1.92
16 a	6.67	-3.50	0.00	0.00	-4.06	-1.67
16 b	4.45	-1.51	0.00	0.00	-2.16	-0.83

1I_A_SL_HL93_tandem_EL.OUT 9/11/2009

VEH: HL93- TANDEM - BRUG(5.75.44) page 61
date 11/09/2009; time 14:41:32
Cline Avenue - Striped Lanes - Triple Box - 6 Webs - 111'-4"

Summary of the results (Maximum)

Section	Deadload Moment	Deadload Ax.Frc	P.T. Moment	P.T. Ax.Frc	Live load Moment	Live load Ax.Frc
1 a	-3.85	0.45	0.00	0.00	0.02	0.01
1 b	-12.27	1.82	0.00	0.00	0.15	0.06
1 right	-13.64	2.07	0.00	0.00	0.19	0.07
2 left	-6.34	2.82	0.00	0.00	0.20	0.02
2 a	-5.43	2.62	0.00	0.00	0.00	0.00
2 b	-0.74	1.59	0.00	0.00	2.73	-0.42
2 c	-0.18	1.48	0.00	0.00	3.75	-0.43
2 right	-5.10	2.61	0.00	0.00	-0.15	0.03
3 left	-8.76	2.37	0.00	0.00	1.00	1.11
3 a	-7.59	2.13	0.00	0.00	1.70	0.93
3 b	-0.70	0.83	0.00	0.00	3.89	0.05
3 c	1.77	0.52	0.00	0.00	4.81	-0.14
3 right	-5.39	2.55	0.00	0.00	0.74	-0.11
4 left	-6.99	2.15	0.00	0.00	0.17	-0.20
4 a	-5.84	1.96	0.00	0.00	0.14	-0.20
4 b	0.91	1.00	0.00	0.00	3.58	0.14
4 c	2.45	0.92	0.00	0.00	3.81	-0.16
4 right	-6.99	2.15	0.00	0.00	0.17	-0.20
5 left	-5.39	2.56	0.00	0.00	0.74	-0.11
5 a	-4.41	2.31	0.00	0.00	0.98	1.17
5 b	0.88	0.93	0.00	0.00	3.54	0.23
5 c	1.77	0.52	0.00	0.00	4.81	-0.13
5 right	-8.76	2.37	0.00	0.00	1.00	1.11
6 left	-5.10	2.61	0.00	0.00	-0.15	0.03
6 a	-4.28	2.43	0.00	0.00	0.14	1.02
6 b	-0.39	1.53	0.00	0.00	3.57	-0.10
6 c	-0.18	1.48	0.00	0.00	3.75	-0.43
6 right	-6.34	2.82	0.00	0.00	0.20	0.02
7 left	-13.64	2.07	0.00	0.00	0.19	0.07
7 a	-12.27	1.82	0.00	0.00	0.15	0.06
8 a	-0.92	-0.47	0.00	0.00	0.21	0.49
8 b	-0.42	-0.09	0.00	0.00	0.21	0.64
11 top	-7.30	-4.04	0.00	0.00	4.65	-2.13
11 a	-6.67	-3.50	0.00	0.00	3.93	-1.88
11 b	-4.45	-1.51	0.00	0.00	1.98	-0.98
12 top	3.66	-3.54	0.00	0.00	6.16	-3.26
12 a	3.46	-3.04	0.00	0.00	5.13	-2.89
12 b	2.73	-1.21	0.00	0.00	2.37	-1.71
13 top	1.60	-3.78	0.00	0.00	6.13	-2.35
13 a	1.26	-3.27	0.00	0.00	5.04	-1.75
13 b	0.08	-1.36	0.00	0.00	2.57	-0.89
14 top	-1.60	-3.78	0.00	0.00	6.75	-3.36
14 a	-1.26	-3.27	0.00	0.00	5.65	-2.98
14 b	-0.08	-1.36	0.00	0.00	2.63	-1.77
15 top	-3.66	-3.54	0.00	0.00	6.78	-2.25
15 a	-3.46	-3.04	0.00	0.00	5.61	-1.65
15 b	-2.73	-1.21	0.00	0.00	2.85	-0.82
16 top	7.30	-4.04	0.00	0.00	0.01	0.01
16 a	6.67	-3.50	0.00	0.00	0.01	0.01
16 b	4.45	-1.51	0.00	0.00	0.02	0.01

1I_A_SL_HL93_tandem_EL.OUT 9/11/2009

VEH: HL93- TANDEM - BRUG(5.75.44) page 62
date 11/09/2009; time 14:41:32
Cline Avenue - Striped Lanes - Triple Box - 6 Webs - 111'-4"

Summary of the results (Minimum)

Section	Deadload Moment	Deadload Ax.Frc	P.T. Moment	P.T. Ax.Frc	Live load Moment	Live load Ax.Frc
1 a	-3.85	0.45	0.00	0.00	-0.15	0.10
1 b	-12.27	1.82	0.00	0.00	-1.68	0.58
1 right	-13.64	2.07	0.00	0.00	-2.28	0.70
2 left	-6.34	2.82	0.00	0.00	-7.02	0.06
2 a	-5.43	2.62	0.00	0.00	-6.19	-0.14
2 b	-0.74	1.59	0.00	0.00	-0.70	-0.24
2 c	-0.18	1.48	0.00	0.00	-0.37	0.30
2 right	-5.10	2.61	0.00	0.00	-6.57	-0.15
3 left	-8.76	2.37	0.00	0.00	-9.39	0.32
3 a	-7.59	2.13	0.00	0.00	-8.45	0.22
3 b	-0.70	0.83	0.00	0.00	-2.41	-0.10
3 c	1.77	0.52	0.00	0.00	-0.16	-0.07
3 right	-5.39	2.55	0.00	0.00	-10.15	0.35
4 left	-6.99	2.15	0.00	0.00	-6.71	0.23
4 a	-5.84	1.96	0.00	0.00	-5.93	0.02
4 b	0.91	1.00	0.00	0.00	-0.59	-0.07
4 c	2.45	0.92	0.00	0.00	-0.34	0.18
4 right	-6.99	2.15	0.00	0.00	-6.71	0.23
5 left	-5.39	2.56	0.00	0.00	-10.15	0.35
5 a	-4.41	2.31	0.00	0.00	-9.16	0.25
5 b	0.88	0.93	0.00	0.00	-2.78	-0.19
5 c	1.77	0.52	0.00	0.00	-0.16	-0.07
5 right	-8.76	2.37	0.00	0.00	-9.39	0.32
6 left	-5.10	2.61	0.00	0.00	-6.57	-0.15
6 a	-4.28	2.43	0.00	0.00	-5.80	-0.35
6 b	-0.39	1.53	0.00	0.00	-0.10	-0.48
6 c	-0.18	1.48	0.00	0.00	-0.37	0.30
6 right	-6.34	2.82	0.00	0.00	-7.02	0.06
7 left	-13.64	2.07	0.00	0.00	-2.28	0.70
7 a	-12.27	1.82	0.00	0.00	-1.68	0.58
8 a	-0.92	-0.47	0.00	0.00	-0.28	0.20
8 b	-0.42	-0.09	0.00	0.00	-0.24	0.22
11 top	-7.30	-4.04	0.00	0.00	-0.01	0.01
11 a	-6.67	-3.50	0.00	0.00	-0.01	0.01
11 b	-4.45	-1.51	0.00	0.00	-0.02	0.01
12 top	3.66	-3.54	0.00	0.00	-6.78	-2.25
12 a	3.46	-3.04	0.00	0.00	-5.61	-1.65
12 b	2.73	-1.21	0.00	0.00	-2.85	-0.82
13 top	1.60	-3.78	0.00	0.00	-6.75	-3.36
13 a	1.26	-3.27	0.00	0.00	-5.65	-2.98
13 b	0.08	-1.36	0.00	0.00	-2.63	-1.77
14 top	-1.60	-3.78	0.00	0.00	-6.13	-2.35
14 a	-1.26	-3.27	0.00	0.00	-5.04	-1.75
14 b	-0.08	-1.36	0.00	0.00	-2.57	-0.89
15 top	-3.66	-3.54	0.00	0.00	-6.16	-3.26
15 a	-3.46	-3.04	0.00	0.00	-5.13	-2.89
15 b	-2.73	-1.21	0.00	0.00	-2.37	-1.71
16 top	7.30	-4.04	0.00	0.00	-4.65	-2.13
16 a	6.67	-3.50	0.00	0.00	-3.93	-1.88
16 b	4.45	-1.51	0.00	0.00	-1.98	-0.98

Summary of the results (Maximum)

Section	--- Deadload ----		----- P.T. ------		--- Live load ---	
	Moment	Ax.Frc	Moment	Ax.Frc	Moment	Ax.Frc
1 a	-3.85	0.45	0.00	0.00	0.01	0.03
1 b	-12.27	1.82	0.00	0.00	0.09	0.12
1 right	-13.64	2.07	0.00	0.00	0.11	0.14
2 left	-6.34	2.82	0.00	0.00	0.12	0.06
2 a	-5.43	2.62	0.00	0.00	1.56	0.46
2 b	-0.74	1.59	0.00	0.00	3.57	-0.22
2 c	-0.18	1.48	0.00	0.00	4.99	-0.63
2 right	-5.10	2.61	0.00	0.00	1.54	0.70
3 left	-8.76	2.37	0.00	0.00	4.32	1.44
3 a	-7.59	2.13	0.00	0.00	5.85	1.14
3 b	-0.70	0.83	0.00	0.00	6.51	0.09
3 c	1.77	0.52	0.00	0.00	7.21	-0.05
3 right	-5.39	2.55	0.00	0.00	3.97	1.54
4 left	-6.99	2.15	0.00	0.00	1.77	0.63
4 a	-5.84	1.96	0.00	0.00	2.29	1.22
4 b	0.91	1.00	0.00	0.00	4.83	0.28
4 c	2.45	0.92	0.00	0.00	5.22	0.01
4 right	-6.99	2.15	0.00	0.00	1.77	0.63
5 left	-5.39	2.56	0.00	0.00	3.97	1.54
5 a	-4.41	2.31	0.00	0.00	4.58	1.56
5 b	0.88	0.93	0.00	0.00	5.73	0.47
5 c	1.77	0.52	0.00	0.00	7.21	-0.05
5 right	-8.76	2.37	0.00	0.00	4.32	1.44
6 left	-5.10	2.61	0.00	0.00	1.53	0.70
6 a	-4.28	2.43	0.00	0.00	2.49	0.83
6 b	-0.39	1.53	0.00	0.00	4.82	-0.22
6 c	-0.18	1.48	0.00	0.00	4.99	-0.63
6 right	-6.34	2.82	0.00	0.00	0.12	0.06
7 left	-13.64	2.07	0.00	0.00	0.11	0.14
7 a	-12.27	1.82	0.00	0.00	0.09	0.12
8 a	-0.92	-0.47	0.00	0.00	0.34	0.38
8 b	-0.42	-0.09	0.00	0.00	0.30	0.52
11 top	-7.30	-4.04	0.00	0.00	6.62	-5.27
11 a	-6.67	-3.50	0.00	0.00	5.58	-4.45
11 b	-4.45	-1.51	0.00	0.00	2.94	-1.99
12 top	3.66	-3.54	0.00	0.00	9.09	-3.95
12 a	3.46	-3.04	0.00	0.00	7.73	-3.42
12 b	2.73	-1.21	0.00	0.00	3.91	-1.70
13 top	1.60	-3.78	0.00	0.00	10.55	-4.78
13 a	1.26	-3.27	0.00	0.00	9.04	-4.00
13 b	0.08	-1.36	0.00	0.00	4.80	-1.69
14 top	-1.60	-3.78	0.00	0.00	10.88	-4.24
14 a	-1.26	-3.27	0.00	0.00	9.30	-3.68
14 b	-0.08	-1.36	0.00	0.00	4.72	-1.87
15 top	-3.66	-3.54	0.00	0.00	10.79	-3.51
15 a	-3.46	-3.04	0.00	0.00	9.25	-2.96
15 b	-2.73	-1.21	0.00	0.00	4.94	-1.99
16 top	7.30	-4.04	0.00	0.00	0.11	-2.36
16 a	6.67	-3.50	0.00	0.00	0.19	-1.94
16 b	4.45	-1.51	0.00	0.00	0.21	-0.73

Summary of the results (Minimum)

Section	--- Deadload ----		----- P.T. ------		--- Live load ---	
	Moment	Ax.Frc	Moment	Ax.Frc	Moment	Ax.Frc
1 a	-3.85	0.45	0.00	0.00	-0.10	0.14
1 b	-12.27	1.82	0.00	0.00	-1.32	0.90
1 right	-13.64	2.07	0.00	0.00	-1.92	1.20
2 left	-6.34	2.82	0.00	0.00	-8.35	-0.12
2 a	-5.43	2.62	0.00	0.00	-7.01	-0.23
2 b	-0.74	1.59	0.00	0.00	-1.17	-0.19
2 c	-0.18	1.48	0.00	0.00	-0.70	0.52
2 right	-5.10	2.61	0.00	0.00	-7.45	0.47
3 left	-8.76	2.37	0.00	0.00	-11.98	0.47
3 a	-7.59	2.13	0.00	0.00	-10.56	0.32
3 b	-0.70	0.83	0.00	0.00	-3.65	0.12
3 c	1.77	0.52	0.00	0.00	-0.34	0.17
3 right	-5.39	2.55	0.00	0.00	-14.22	0.35
4 left	-6.99	2.15	0.00	0.00	-7.90	1.08
4 a	-5.84	1.96	0.00	0.00	-6.76	0.92
4 b	0.91	1.00	0.00	0.00	-1.23	0.27
4 c	2.45	0.92	0.00	0.00	-0.77	0.43
4 right	-6.99	2.15	0.00	0.00	-7.90	1.08
5 left	-5.39	2.56	0.00	0.00	-14.22	0.35
5 a	-4.41	2.31	0.00	0.00	-12.69	0.18
5 b	0.88	0.93	0.00	0.00	-4.76	-0.32
5 c	1.77	0.52	0.00	0.00	-0.24	-0.12
5 right	-8.76	2.37	0.00	0.00	-11.98	0.47
6 left	-5.10	2.61	0.00	0.00	-7.42	-0.54
6 a	-4.28	2.43	0.00	0.00	-5.93	-0.65
6 b	-0.39	1.53	0.00	0.00	-1.00	0.09
6 c	-0.18	1.48	0.00	0.00	-0.70	0.52
6 right	-6.34	2.82	0.00	0.00	-8.35	-0.12
7 left	-13.64	2.07	0.00	0.00	-1.92	1.20
7 a	-12.27	1.82	0.00	0.00	-1.32	0.90
8 a	-0.92	-0.47	0.00	0.00	-0.59	0.39
8 b	-0.42	-0.09	0.00	0.00	-0.50	0.39
11 top	-7.30	-4.04	0.00	0.00	-0.17	-2.31
11 a	-6.67	-3.50	0.00	0.00	-0.25	-1.89
11 b	-4.45	-1.51	0.00	0.00	-0.21	-0.73
12 top	3.66	-3.54	0.00	0.00	-10.79	-3.51
12 a	3.46	-3.04	0.00	0.00	-9.25	-2.96
12 b	2.73	-1.21	0.00	0.00	-4.94	-1.99
13 top	1.60	-3.78	0.00	0.00	-10.88	-4.24
13 a	1.26	-3.27	0.00	0.00	-9.30	-3.68
13 b	0.08	-1.36	0.00	0.00	-4.72	-1.87
14 top	-1.60	-3.78	0.00	0.00	-10.55	-4.78
14 a	-1.26	-3.27	0.00	0.00	-9.04	-4.00
14 b	-0.08	-1.36	0.00	0.00	-4.80	-1.69
15 top	-3.66	-3.54	0.00	0.00	-9.09	-3.95
15 a	-3.46	-3.04	0.00	0.00	-7.73	-3.42
15 b	-2.73	-1.21	0.00	0.00	-3.91	-1.70
16 top	7.30	-4.04	0.00	0.00	-6.62	-5.28
16 a	6.67	-3.50	0.00	0.00	-5.58	-4.45
16 b	4.45	-1.51	0.00	0.00	-2.94	-1.99

VEH: HL93- TANDEM BRUG(5.75.44) page 61
date 11/09/2009; time 14:41:40
Cline Avenue - Striped Lanes - Triple Box - 6 Webs - 111'-4"

Summary of the results (Maximum)

Section	Deadload Moment	Deadload Ax.Frc	P.T. Moment	P.T. Ax.Frc	Live load Moment	Live load Ax.Frc
1 a	-3.85	0.45	0.00	0.00	0.02	0.02
1 b	-12.27	1.82	0.00	0.00	0.18	0.08
1 right	-13.64	2.07	0.00	0.00	0.23	0.09
2 left	-6.34	2.82	0.00	0.00	0.23	0.04
2 a	-5.43	2.62	0.00	0.00	0.18	0.05
2 b	-0.74	1.59	0.00	0.00	2.73	-0.42
2 c	-0.18	1.48	0.00	0.00	4.53	-0.56
2 right	-5.10	2.61	0.00	0.00	-0.15	0.03
3 left	-8.76	2.37	0.00	0.00	1.00	1.11
3 a	-7.59	2.13	0.00	0.00	2.25	1.25
3 b	-0.70	0.83	0.00	0.00	4.73	0.09
3 c	1.77	0.52	0.00	0.00	6.64	-0.21
3 right	-5.39	2.55	0.00	0.00	2.73	0.24
4 left	-6.99	2.15	0.00	0.00	0.61	-0.36
4 a	-5.84	1.96	0.00	0.00	0.54	-0.33
4 b	0.91	1.00	0.00	0.00	3.89	0.13
4 c	2.45	0.92	0.00	0.00	4.69	-0.09
4 right	-6.99	2.15	0.00	0.00	0.61	-0.36
5 left	-5.39	2.56	0.00	0.00	2.73	0.24
5 a	-4.41	2.31	0.00	0.00	2.54	0.22
5 b	0.88	0.93	0.00	0.00	4.21	0.38
5 c	1.77	0.52	0.00	0.00	6.64	-0.21
5 right	-8.76	2.37	0.00	0.00	1.00	1.11
6 left	-5.10	2.61	0.00	0.00	-0.15	0.03
6 a	-4.28	2.43	0.00	0.00	0.14	1.02
6 b	-0.39	1.53	0.00	0.00	3.88	-0.38
6 c	-0.18	1.48	0.00	0.00	4.53	-0.56
6 right	-6.34	2.82	0.00	0.00	0.23	0.04
7 left	-13.64	2.07	0.00	0.00	0.23	0.09
7 a	-12.27	1.82	0.00	0.00	0.18	0.08
8 a	-0.92	-0.47	0.00	0.00	0.21	0.49
8 b	-0.42	-0.09	0.00	0.00	0.21	0.64
11 top	-7.30	-4.04	0.00	0.00	6.31	-4.73
11 a	-6.67	-3.50	0.00	0.00	5.33	-4.16
11 b	-4.45	-1.51	0.00	0.00	2.67	-2.12
12 top	3.66	-3.54	0.00	0.00	9.02	-4.54
12 a	3.46	-3.04	0.00	0.00	7.59	-4.02
12 b	2.73	-1.21	0.00	0.00	3.63	-2.03
13 top	1.60	-3.78	0.00	0.00	8.80	-3.04
13 a	1.26	-3.27	0.00	0.00	7.68	-3.85
13 b	0.08	-1.36	0.00	0.00	3.93	-1.93
14 top	-1.60	-3.78	0.00	0.00	10.24	-4.74
14 a	-1.26	-3.27	0.00	0.00	8.66	-4.20
14 b	-0.08	-1.36	0.00	0.00	4.18	-2.15
15 top	-3.66	-3.54	0.00	0.00	8.36	-6.83
15 a	-3.46	-3.04	0.00	0.00	7.22	-5.98
15 b	-2.73	-1.21	0.00	0.00	3.82	-2.97
16 top	7.30	-4.04	0.00	0.00	0.12	0.12
16 a	6.67	-3.50	0.00	0.00	0.13	0.11
16 b	4.45	-1.51	0.00	0.00	0.17	0.09

VEH: HL93- TANDEM BRUG(5.75.44) page 62
date 11/09/2009; time 14:41:40
Cline Avenue - Striped Lanes - Triple Box - 6 Webs - 111'-4"

Summary of the results (Minimum)

Section	Deadload Moment	Deadload Ax.Frc	P.T. Moment	P.T. Ax.Frc	Live load Moment	Live load Ax.Frc
1 a	-3.85	0.45	0.00	0.00	-0.18	0.16
1 b	-12.27	1.82	0.00	0.00	-1.97	0.97
1 right	-13.64	2.07	0.00	0.00	-2.67	1.19
2 left	-6.34	2.82	0.00	0.00	-8.84	0.35
2 a	-5.43	2.62	0.00	0.00	-7.35	-0.15
2 b	-0.74	1.59	0.00	0.00	-0.89	-0.06
2 c	-0.18	1.48	0.00	0.00	-0.62	0.43
2 right	-5.10	2.61	0.00	0.00	-9.23	0.80
3 left	-8.76	2.37	0.00	0.00	-13.24	0.44
3 a	-7.59	2.13	0.00	0.00	-11.76	0.31
3 b	-0.70	0.83	0.00	0.00	-3.32	-0.03
3 c	1.77	0.52	0.00	0.00	-0.29	0.12
3 right	-5.39	2.55	0.00	0.00	-14.76	0.35
4 left	-6.99	2.15	0.00	0.00	-9.53	1.22
4 a	-5.84	1.96	0.00	0.00	-8.12	0.92
4 b	0.91	1.00	0.00	0.00	-1.24	0.24
4 c	2.45	0.92	0.00	0.00	-0.68	0.36
4 right	-6.99	2.15	0.00	0.00	-9.52	1.22
5 left	-5.39	2.56	0.00	0.00	-14.76	0.35
5 a	-4.41	2.31	0.00	0.00	-13.21	0.22
5 b	0.88	0.93	0.00	0.00	-4.08	-0.34
5 c	1.77	0.52	0.00	0.00	-0.18	0.27
5 right	-8.76	2.37	0.00	0.00	-13.24	0.44
6 left	-5.10	2.61	0.00	0.00	-8.96	0.82
6 a	-4.28	2.43	0.00	0.00	-6.82	0.19
6 b	-0.39	1.53	0.00	0.00	-0.98	0.64
6 c	-0.18	1.48	0.00	0.00	-0.61	0.43
6 right	-6.34	2.82	0.00	0.00	-8.84	0.35
7 left	-13.64	2.07	0.00	0.00	-2.67	1.19
7 a	-12.27	1.82	0.00	0.00	-1.97	0.97
8 a	-0.92	-0.47	0.00	0.00	-0.47	0.45
8 b	-0.42	-0.09	0.00	0.00	-0.40	0.31
11 top	-7.30	-4.04	0.00	0.00	-0.12	0.12
11 a	-6.67	-3.50	0.00	0.00	-0.13	0.11
11 b	-4.45	-1.51	0.00	0.00	-0.17	0.09
12 top	3.66	-3.54	0.00	0.00	-8.36	-6.83
12 a	3.46	-3.04	0.00	0.00	-7.22	-5.98
12 b	2.73	-1.21	0.00	0.00	-3.82	-2.98
13 top	1.60	-3.78	0.00	0.00	-10.24	-4.74
13 a	1.26	-3.27	0.00	0.00	-8.66	-4.20
13 b	0.08	-1.36	0.00	0.00	-4.18	-2.15
14 top	-1.60	-3.78	0.00	0.00	-8.80	-3.04
14 a	-1.26	-3.27	0.00	0.00	-7.68	-3.85
14 b	-0.08	-1.36	0.00	0.00	-3.93	-1.93
15 top	-3.66	-3.54	0.00	0.00	-9.02	-4.54
15 a	-3.46	-3.04	0.00	0.00	-7.59	-4.02
15 b	-2.73	-1.21	0.00	0.00	-3.63	-2.03
16 top	7.30	-4.04	0.00	0.00	-6.31	-4.73
16 a	6.67	-3.50	0.00	0.00	-5.33	-4.16
16 b	4.45	-1.51	0.00	0.00	-2.67	-2.12

4.4 3D Analysis Section IIA

CASE II A — TWO ADJACENT BOXES (3 WEBS) – Ramps A.

worst case occurs on Ramp A, constant width section, unit V.

4.4.1 Brug Model

BRUG SECTIONS

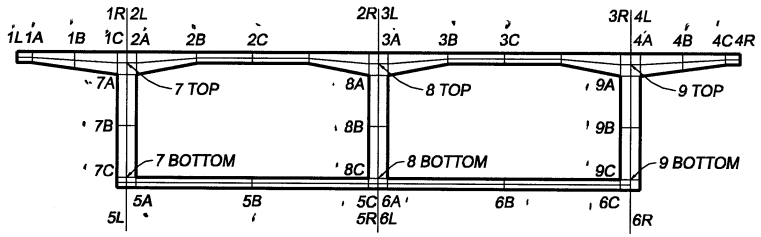

VDEM
01/14/09

4.4.1/1

HALF SIZE PRINT - 11x17	Designed by		URS Corporation Southern 7650 Corporate Center Drive Suite 400 Miami, FL 33126-1220 Tel: (305) 262-7466 C.A. No. EB 00000002	TYPICAL SECTION - Transverse Analysis		SECTION IIA
No. Date App. Revisions	Drawn by R.V.A.				WAVE P.C. NO.	DRAWING NO. SHEET NO.
	Checked by					
	DRAWING SCALE:					

BRUG MODEL

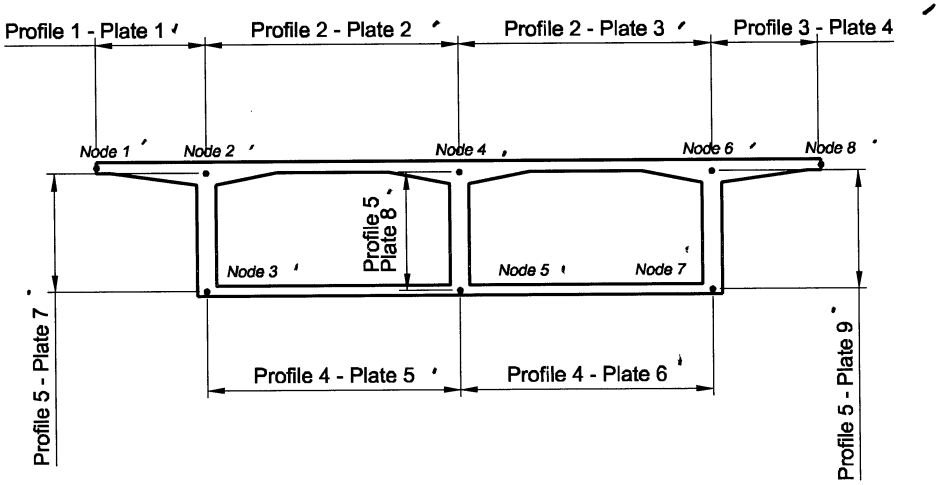

VDEM
01/14/07

4.4.1/2

HALF SIZE PRINT - 11x17	Designed by		URS Corporation Southern 7650 Corporate Center Drive Suite 400 Miami, FL 33126-1220 Tel: (305) 262-7448 C.A. No. EB 00000022	TYPICAL SECTION - Transverse Analysis		SECTION IIA
No. Date App. Revisions	Drawn by R.V.A.					
	Checked by					
	DRAWING SCALE:				NAME P.E. NO.	DRAWING NO. / SHEET NO.

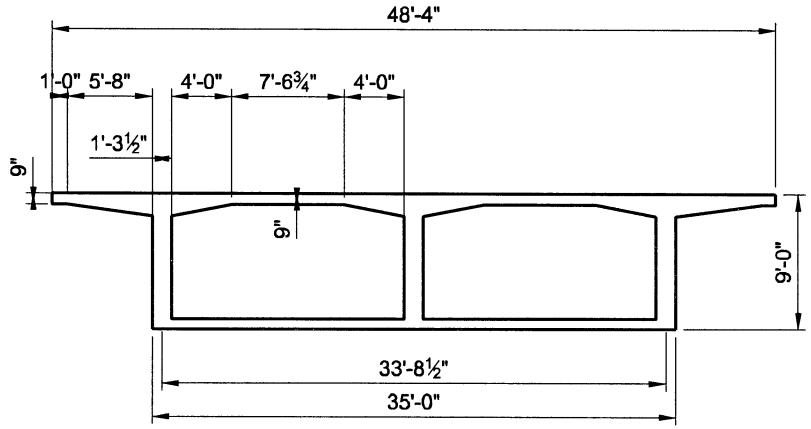

DIMENSIONS

JDeen
01/14/09

4.4.1/3

HALF SIZE PRINT - 11x17	Designed by		URS Corporation Southern 7650 Corporate Center Drive Suite 400 Miami, FL 33126-1220 Tel: (305) 262-7485 C.A. No. EB 00000002	TYPICAL SECTION - Transverse Analysis		SECTION IIA
No. Date App. Revisions	Drawn by R.V.A.					DRAWING NO. SHEET NO.
	Checked by					
	DRAWING SCALE				NAME P.C. NO.	

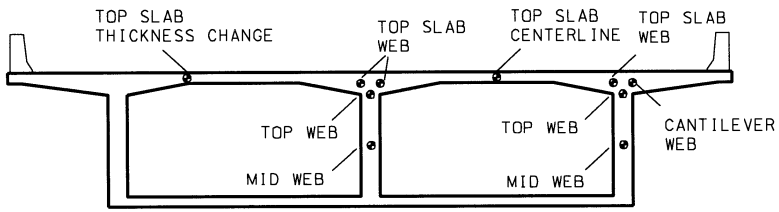

RATING POINTS

DEM
01/14/09

4.4.1/4

HALF SIZE PRINT - 11x17			
No	Date	App.	Revisions

Designed by
Drawn by R.V.A.
Checked by
DRAWING SCALE

URS Corporation Southern
7650 Corporate Center Drive
Suite 400
Miami, FL 33126-1220
Tel: (305) 262-7485
C.A. No. EB 00000002

TYPICAL SECTION - Transverse Analysis

NAME P.C. NO.

SECTION IIA

DRAWING NO.
SHEET NO.

URS CORPORATION	Made by:	PT	Date: 12-Jan-09	Job Number: 25626272.00001	Job Number: 25626272.00001
	Checked by:	DLM	Date: 01/14/09	Sheet Number:	Sheet Number:
Brug Joints and Members	Backchecked by:		Date:		

V:\Projects\Cline Avenue\Load Rating Analysis\Transverse Analysis\Spreadsheet\[Brug Input.xls]Model_Joints Brugh_II_A

Data measured from Microstation File

V:\Projects\Cline Avenue\Load Rating Analysis\Transverse Analysis\Spreadsheet\[Brug Input.xls]Model_Joints Brugh_II_A

GTStrudl Joint	X ft	Y ft	Height ft	BRUG NODE
1	0.0000	8.2500	0.750	1
2	1.0000	8.2500	0.750	
3	3.8333	8.2500	1.125	
4	6.6667	8.2500	1.500	
5	7.3125	8.2500	1.500	2
6	7.9583	8.2500	1.500	
7	11.9583	8.2500	0.750	
8	15.7395	8.2500	0.750	
9	19.5208	8.2500	0.750	
10	23.5208	8.2500	1.500	
11	24.1667	8.2500	1.500	4
12	24.8125	8.2500	1.500	
13	28.8125	8.2500	0.750	
14	32.5938	8.2500	0.750	
15	36.3750	8.2500	0.750	
16	40.3750	8.2500	1.500	
17	41.0208	8.2500	1.500	6
18	41.6667	8.2500	1.500	
19	44.5000	8.2500	1.125	
20	47.3333	8.2500	0.750	
21	48.3333	8.2500	0.750	8
22	7.3125	7.5000	1.292	
23	7.3125	4.0833	1.292	
24	7.3125	0.6667	1.292	
25	7.3125	0.3333	0.667	3
26	7.9583	0.3333	0.667	
27	15.7395	0.3333	0.667	
28	23.5208	0.3333	0.667	
29	24.1667	0.3333	0.667	5
30	24.8125	0.3333	0.667	
31	32.5938	0.3333	0.667	
32	40.3750	0.3333	0.667	
33	41.0208	0.3333	0.667	7
34	41.0208	0.6667	1.292	
35	41.0208	4.0833	1.292	
36	41.0208	7.5000	1.292	
38	24.1667	0.6667	1.292	
39	24.1667	4.0833	1.292	
40	24.1667	7.5000	1.292	

GTStrudl MEMBER	BEGIN JOINT	END JOINT	Length ft
1	1	2	1.000
2	2	3	2.833
3	3	4	2.833
4	4	5	0.646
5	5	6	0.646
6	6	7	4.000
7	7	8	3.781
8	8	9	3.781
9	9	10	4.000
10	10	11	0.646
11	11	12	0.646
12	12	13	4.000
13	13	14	3.781
14	14	15	3.781
15	15	16	4.000
16	16	17	0.646
17	17	18	0.646
18	18	19	2.833
19	19	20	2.833
20	20	21	1.000
21	5	22	0.750
22	22	23	3.417
23	23	24	3.417
24	24	25	0.333
25	25	26	0.646
26	26	27	7.781
27	27	28	7.781
28	28	29	0.646
29	29	30	0.646
30	30	31	7.781
31	31	32	7.781
32	32	33	0.646
33	33	34	0.333
34	34	35	3.417
35	35	36	3.417
36	36	17	0.750
37	29	38	0.333
38	38	39	3.417
39	39	40	3.417
40	40	11	0.750

LEFT CANTILEVER

GT Joint	Brug Section	Brug Joint	Length	Height
1	1L	1	0.000	0.750
2	1A	2	1.000	0.750
3	1B	3	3.833	1.125
4	1C	4	6.667	1.500
5	1R	5	7.313	1.500

CENTER SPAN LEFT CELL

GT Joint	Brug Section	Brug Joint	Length	Height
5	2L	1	0.000	1.500
6	2A	2	0.646	1.500
7	2B	3	4.646	0.750
8	2C	4	8.427	0.750
9		5	12.208	0.750
10		6	16.208	1.500
11	2R	7	16.854	1.500

CENTER SPAN LEFT CELL

GT Joint	Brug Section	Brug Joint	Length	Height
11	3L	1	0.000	1.500
12	3A	2	0.646	1.500
13	3B	3	4.646	0.750
14	3C	4	8.427	0.750
15		5	12.208	0.750
16		6	16.208	1.500
17	3R	7	16.854	1.500

RIGHT CANTILEVER

GT Joint	Brug Section	Brug Joint	Length	Height
17	4L	1	0.000	1.500
18	4A	2	0.646	1.500
19	4B	3	3.479	1.125
20	4C	4	6.313	0.750
21	4R	5	7.313	0.750

BOTTOM SLAB LEFT

GT Joint	Brug Section	Brug Joint	Length	Height
25	5L	1	0.000	0.667
26	5A	2	0.646	0.667
27	5B	3	8.427	0.667
28	5C	4	16.208	0.667
29	5R	5	16.854	0.667

BOTTOM SLAB RIGHT

GT Joint	Brug Section	Brug Joint	Length	Height
29	6L	1	0.000	0.667
30	6A	2	0.646	0.667
31	6B	3	8.427	0.667
32	6C	4	16.208	0.667
33	6R	5	16.854	0.667

LEFT WEB

GT Joint	Brug Section	Brug Joint	Length	Height
5	7 TOP	1	0.000	1.292
22	7A	2	0.750	1.292
23	7B	3	4.167	1.292
24	7C	4	7.583	1.292
25	7 BOTTOM	5	7.917	1.292

CENTER WEB

GT Joint	Brug Section	Brug Joint	Length	Height
11	8 TOP	1	0.000	1.292
40	8A	2	0.750	1.292
39	8B	3	4.167	1.292
38	8C	4	7.583	1.292
29	8 BOTTOM	5	7.917	1.292

4.4.1/5

TRUCK LOCATION - NO TRAFFIC ON SHOULDERS (TWO LANES)

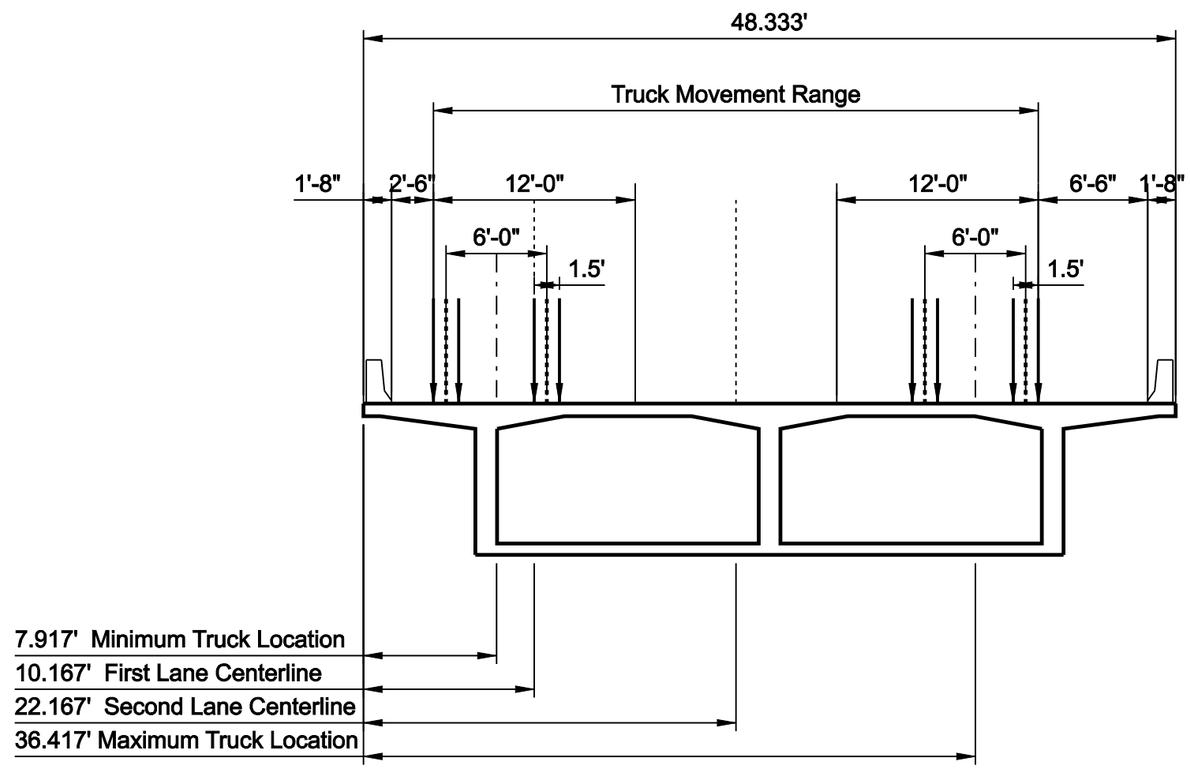

HALF SIZE PRINT - 11x17

No.	Date	App.	Revisions

Designed by .
Drawn by R.V.A.
Checked by .
DRAWING SCALE:

URS Corporation Southern
7650 Corporate Center Drive
Suite 400
Miami, FL 33126-1220
Tel: (305) 262-7466
C.A. No. EB 00000002

TYPICAL SECTION - Transverse Analysis

NAME PLE. NO.

SECTION IIA

DRAWING NO. .
SHEET NO. .

Design by: PT 9/09
Independent Check by: RJB 9/09

4.4.2 Brug Input AASHTO Lanes

1II_A_HL93_truck_EL.txt 9/11/2009

```
* start ; column 11-30 can be used to have your own text on the top of each page
*   5   10   15   20   25   30   35   40   45   50   55   60   65   70   75   80
*   V    V    V    V    V    V    V    V    V    V    V    V    V    V    V    V
00001  1 1     VEH: HL93- TRUCK - Single Vehicle
* code 1001
Cline Avenue - Load Rating - Double Box - 3 Webs - 48'-4" Wide
* code 1002
    2         1
* code 1003
*   5   10   15   20   25   30   35   40   45   50   55   60   65   70   75   80
*   V    V    V    V    V    V    V    V    V    V    V    V    V    V    V    V
250.0      102.0      48.33    1.0       1.0       1.3
* code 1004
    1    0    2
* code 1005
   72    1
* code 1005a
* location traffic lanes
7.667
* maximum and minimum truck
6.667     41.667    10.000
* code 1007, linear loads
0.7350    0.441
47.5983   0.441
* code 1201
    8    5    4    2    3
* code 1202 coordinates
 0.0000   8.2500
 7.3125   8.2500
 7.3125   0.3333
24.1667   8.2500
24.1667   0.3333
41.0208   8.2500
41.0208   0.3333
48.3333   8.2500
* code 1203 - profile 1
    5    2    3    4
0.000     0.750
1.000     0.750
3.833     1.125
6.667     1.500
7.313     1.500
* code 1203 - profile 2
    7    2    3    4
0.000     1.500
0.646     1.500
4.646     0.750
8.427     0.750
12.208    0.750
16.208    1.500
16.854    1.500
* code 1203 - profile 3
    5    2    3    4
0.000     1.500
0.646     1.500
3.479     1.125
6.313     0.750
7.313     0.750
* code 1203 - profile 4
    5    2    3    4
0.000     0.667
0.646     0.667
8.427     0.667
16.208    0.667
16.854    0.667
* code 1203 - profile 5
    5    2    3    4
0.000     1.292
0.750     1.292
4.167     1.292
7.583     1.292
7.917     1.292
* code 1204 - assembling boxgirder
    1    2    1
    2    4    2
    4    6    2
    6    8    3
    3    5    4
    5    7    4
    2    3    5
    4    5    5
```

1II_A_HL93_truck_EL.txt 9/11/2009

```
    6    7    5
* code 1205 control code
    1    2   13    1    1    0    4    3     1.0       1.0
* code 1206 wheels/axle
       0.0
       1.5
       6.0
       7.5 0.833
* code 1207 definition axles
0.0       0.1
14.0      0.4
28.0      0.4
* code 1208 - accuracy
0.00001   0.00001   0.00001   .00001    .00001
* code 1209 number sections
   33
   1A   1B   1C   1R   2L   2A   2B   2C   2R   3L   3A   3B   3C   3R
   4L   4A   4B   4C   5A   5B   5C   6A   6B   6C
   7L   7A   7B   8L   8A   8B   9L   9A   9B
* code 1210 - density conrete
0.156
* code 1211 - extra forces selfweight

* code 1212 - surcharge
1.2083
* code 1213 - Prestressing Layout - NONE
```

1II_A_HL93_tandem_EL.txt 9/11/2009

```
* start ; column 11-30 can be used to have your own text on the top of each page
*   5   10   15   20   25   30   35   40   45   50   55   60   65   70   75   80
*   V    V    V    V    V    V    V    V    V    V    V    V    V    V    V    V
00001  1 1     VEH: HL93- TANDEM - SINGLE TRUCK
* code 1001
Cline Avenue - Load Rating - Double Box - 3 Webs - 48'-4" Wide
* code 1002
    2         1
* code 1003
*   5   10   15   20   25   30   35   40   45   50   55   60   65   70   75   80
*   V    V    V    V    V    V    V    V    V    V    V    V    V    V    V    V
250.0      102.0      48.33    1.0       1.0       1.3
* code 1004
    1    0    2
* code 1005
   50    1
* code 1005a
* location traffic lanes
7.667
* maximum and minimum truck
6.667     41.667    10.000
* code 1007, linear loads
0.7350    0.441
47.5983   0.441
* code 1201
    8    5    4    2    3
* code 1202 coordinates
 0.0000   8.2500
 7.3125   8.2500
 7.3125   0.3333
24.1667   8.2500
24.1667   0.3333
41.0208   8.2500
41.0208   0.3333
48.3333   8.2500
* code 1203 - profile 1
    5    2    3    4
0.000     0.750
1.000     0.750
3.833     1.125
6.667     1.500
7.313     1.500
* code 1203 - profile 2
    7    2    3    4
0.000     1.500
0.646     1.500
4.646     0.750
8.427     0.750
12.208    0.750
16.208    1.500
16.854    1.500
* code 1203 - profile 3
    5    2    3    4
0.000     1.500
0.646     1.500
3.479     1.125
6.313     0.750
7.313     0.750
* code 1203 - profile 4
    5    2    3    4
0.000     0.667
0.646     0.667
8.427     0.667
16.208    0.667
16.854    0.667
* code 1203 - profile 5
    5    2    3    4
0.000     1.292
0.750     1.292
4.167     1.292
7.583     1.292
7.917     1.292
* code 1204 - assembling boxgirder
    1    2    1
    2    4    2
    4    6    2
    6    8    3
    3    5    4
    5    7    4
    2    3    5
    4    5    5
```

```
    6    7    5
* code 1205 control code
    1    2   13    1    1    0    4    2     1.0       1.0
* code 1206 wheels/axle
       0.0
       1.5
       6.0
       7.5 0.833
* code 1207 definition axles
0.0       0.5
4.0       0.5
* code 1208 - accuracy
0.00001   0.00001   0.00001   .00001    .00001
* code 1209 number sections
   33
   1A   1B   1C   1R   2L   2A   2B   2C   2R   3L   3A   3B   3C   3R
   4L   4A   4B   4C   5A   5B   5C   6A   6B   6C
   7L   7A   7B   8L   8A   8B   9L   9A   9B
* code 1210 - density conrete
0.156
* code 1211 - extra forces selfweight

* code 1212 - surcharge
1.2083
* code 1213 - Prestressing Layout - NONE
```

```
* start ; column 11-30 can be used to have your own text on the top of each page
00001  1 1     VEH: R1 - TOLL ROAD LOADING No. 1  - SINGLE TRUCK
* code 1001
Cline Avenue - Load Rating - Double Box - 3 Webs - 48'-4" Wide
* code 1002
    2         1
* code 1003
250.0      102.0      48.33    1.0       1.0       1.3
* code 1004
    1    0    2
* code 1005
   90    1
* code 1005a
* location traffic lanes
7.667
* maximum and minimum truck
6.667     41.667    10.000
* code 1007, linear loads
0.7350    0.441
47.5983   0.441
* code 1201
    8    5    4    2    3
* code 1202 coordinates
 0.0000   8.2500
 7.3125   8.2500
 7.3125   0.3333
24.1667   8.2500
24.1667   0.3333
41.0208   8.2500
41.0208   0.3333
48.3333   8.2500
* code 1203 - profile 1
    5    2    3    4
0.000     0.750
1.000     0.750
3.833     1.125
6.667     1.500
7.313     1.500
* code 1203 - profile 2
    7    2    3    4
0.000     1.500
0.646     1.500
4.646     0.750
8.427     0.750
12.208    0.750
16.208    1.500
16.854    1.500
* code 1203 - profile 3
    5    2    3    4
0.000     1.500
0.646     1.500
3.479     1.125
6.313     0.750
7.313     0.750
* code 1203 - profile 4
    5    2    3    4
0.000     0.667
0.646     0.667
8.427     0.667
16.208    0.667
16.854    0.667
* code 1203 - profile 5
    5    2    3    4
0.000     1.292
0.750     1.292
4.167     1.292
7.583     1.292
7.917     1.292
* code 1204 - assembling boxgirder
    1    2    1
    2    4    2
    4    6    2
    6    8    3
    3    5    4
    5    7    4
    2    3    5
    4    5    5
    6    7    5
* code 1205 control code
    1    2   13    1    1    0    4    5     1.0       1.0
* code 1206 wheels/axle
```

1II_A_R1_EL.txt 9/11/2009

```
       0.0
       1.5
       6.0
       7.5 0.833
* code 1207 definition axles
0.00      18.00
10.00     18.00
14.00     18.00
24.00     18.00
28.00     18.00
* code 1208 - accuracy
0.00001   0.00001   0.00001   .00001    .00001
* code 1209 number sections
   33
   1A   1B   1C   1R   2L   2A   2B   2C   2R   3L   3A   3B   3C   3R
   4L   4A   4B   4C   5A   5B   5C   6A   6B   6C
   7L   7A   7B   8L   8A   8B   9L   9A   9B
* code 1210 - density conrete
0.156
* code 1211 - extra forces selfweight

* code 1212 - surcharge
1.2083
* code 1213 - Prestressing Layout - NONE
```

```
* start ; column 11-30 can be used to have your own text on the top of each page
*   5   10   15   20   25   30   35   40   45   50   55   60   65   70   75   80
*   V    V    V    V    V    V    V    V    V    V    V    V    V    V    V    V
00001  1 1     VEH: HL93- TANDEM - SINGLE TRUCK
* code 1001
Cline Avenue - Load Rating - Double Box - 3 Webs - 48'-4" Wide
* code 1002
    2         1
* code 1003
*   5   10   15   20   25   30   35   40   45   50   55   60   65   70   75   80
*   V    V    V    V    V    V    V    V    V    V    V    V    V    V    V    V
250.0      102.0      48.33    1.0       1.0       1.3
* code 1004
    1    0    2
* code 1005
   90    1
* code 1005a
* location traffic lanes
7.667
* maximum and minimum truck
6.667     41.667    10.000
* code 1007, linear loads
0.7350    0.441
47.5983   0.441
* code 1201
    8    5    4    2    3
* code 1202 coordinates
 0.0000   8.2500
 7.3125   8.2500
 7.3125   0.3333
24.1667   8.2500
24.1667   0.3333
41.0208   8.2500
41.0208   0.3333
48.3333   8.2500
* code 1203 - profile 1
    5    2    3    4
0.000     0.750
1.000     0.750
3.833     1.125
6.667     1.500
7.313     1.500
* code 1203 - profile 2
    7    2    3    4
0.000     1.500
0.646     1.500
4.646     0.750
8.427     0.750
12.208    0.750
16.208    1.500
16.854    1.500
* code 1203 - profile 3
    5    2    3    4
0.000     1.500
0.646     1.500
3.479     1.125
6.313     0.750
7.313     0.750
* code 1203 - profile 4
    5    2    3    4
0.000     0.667
0.646     0.667
8.427     0.667
16.208    0.667
16.854    0.667
* code 1203 - profile 5
    5    2    3    4
0.000     1.292
0.750     1.292
4.167     1.292
7.583     1.292
7.917     1.292
* code 1204 - assembling boxgirder
    1    2    1
    2    4    2
    4    6    2
    6    8    3
    3    5    4
    5    7    4
    2    3    5
    4    5    5
```

1II_A_R2_EL.txt 9/11/2009

```
    6    7    5
* code 1205 control code
    1    2   13    1    1    0    4    4     1.0       1.0
* code 1206 wheels/axle
       0.0
       1.5
       6.0
       7.5 0.833
* code 1207 definition axles
0.00      22.50
14.00     22.50
23.00     22.50
37.00     22.50
* code 1208 - accuracy
0.00001   0.00001   0.00001   .00001    .00001
* code 1209 number sections
   33
   1A   1B   1C   1R   2L   2A   2B   2C   2R   3L   3A   3B   3C   3R
   4L   4A   4B   4C   5A   5B   5C   6A   6B   6C
   7L   7A   7B   8L   8A   8B   9L   9A   9B
* code 1210 - density conrete
0.156
* code 1211 - extra forces selfweight

* code 1212 - surcharge
1.2083
* code 1213 - Prestressing Layout - NONE
```

```
* start ; column 11-30 can be used to have your own text on the top of each page
*   5   10   15   20   25   30   35   40   45   50   55   60   65   70   75   80
*   V    V    V    V    V    V    V    V    V    V    V    V    V    V    V    V
00001  1 1     VEH: R3 - TOLL ROAD LOADING No. 3 - SINGLE TRUCK
* code 1001
Cline Avenue - Load Rating - Double Box - 3 Webs - 48'-4" Wide
* code 1002
    2         1
* code 1003
*   5   10   15   20   25   30   35   40   45   50   55   60   65   70   75   80
*   V    V    V    V    V    V    V    V    V    V    V    V    V    V    V    V
250.0      102.0      48.33    1.0       1.0       1.3
* code 1004
    1    0    2
* code 1005
  126    1
* code 1005a
* location traffic lanes
7.667
* maximum and minimum truck
6.667     41.667    10.000
* code 1007, linear loads
0.7350    0.441
47.5983   0.441
* code 1201
    8    5    4    2    3
* code 1202 coordinates
 0.0000   8.2500
 7.3125   8.2500
 7.3125   0.3333
24.1667   8.2500
24.1667   0.3333
41.0208   8.2500
41.0208   0.3333
48.3333   8.2500
* code 1203 - profile 1
    5    2    3    4
0.000     0.750
1.000     0.750
3.833     1.125
6.667     1.500
7.313     1.500
* code 1203 - profile 2
    7    2    3    4
0.000     1.500
0.646     1.500
4.646     0.750
8.427     0.750
12.208    0.750
16.208    1.500
16.854    1.500
* code 1203 - profile 3
    5    2    3    4
0.000     1.500
0.646     1.500
3.479     1.125
6.313     0.750
7.313     0.750
* code 1203 - profile 4
    5    2    3    4
0.000     0.667
0.646     0.667
8.427     0.667
16.208    0.667
16.854    0.667
* code 1203 - profile 5
    5    2    3    4
0.000     1.292
0.750     1.292
4.167     1.292
7.583     1.292
7.917     1.292
* code 1204 - assembling boxgirder
    1    2    1
    2    4    2
    4    6    2
    6    8    3
    3    5    4
    5    7    4
    2    3    5
    4    5    5
```

1II_A_R3_EL.txt 9/11/2009

```
    6    7    5
* code 1205 control code
    1    2   13    1    1    0    4    7     1.0       1.0
* code 1206 wheels/axle
       0.0
       1.5
       6.0
       7.5 0.833
* code 1207 definition axles
0.00      18.00
10.00     18.00
14.00     18.00
40.00     18.00
44.00     18.00
56.00     18.00
76.00     18.00
* code 1208 - accuracy
0.00001   0.00001   0.00001   .00001    .00001
* code 1209 number sections
   33
   1A   1B   1C   1R   2L   2A   2B   2C   2R   3L   3A   3B   3C   3R
   4L   4A   4B   4C   5A   5B   5C   6A   6B   6C
   7L   7A   7B   8L   8A   8B   9L   9A   9B
* code 1210 - density conrete
0.156
* code 1211 - extra forces selfweight

* code 1212 - surcharge
1.2083
* code 1213 - Prestressing Layout - NONE
```

```
* start ; column 11-30 can be used to have your own text on the top of each page
*   5   10   15   20   25   30   35   40   45   50   55   60   65   70   75   80
*   V    V    V    V    V    V    V    V    V    V    V    V    V    V    V    V
00001  1 1     VEH: R4 - MICHIGAN TRUCK TRAIN No.5 - SINGLE TRUCK
* code 1001
Cline Avenue - Load Rating - Double Box - 3 Webs - 48'-4" Wide
* code 1002
    2         1
* code 1003
*   5   10   15   20   25   30   35   40   45   50   55   60   65   70   75   80
*   V    V    V    V    V    V    V    V    V    V    V    V    V    V    V    V
250.0      102.0      48.33    1.0       1.0       1.3
* code 1004
    1    0    2
* code 1005
  134    1
* code 1005a
* location traffic lanes
7.667
* maximum and minimum truck
6.667     41.667    10.000
* code 1007, linear loads
0.7350    0.441
47.5983   0.441
* code 1201
    8    5    4    2    3
* code 1202 coordinates
 0.0000   8.2500
 7.3125   8.2500
 7.3125   0.3333
24.1667   8.2500
24.1667   0.3333
41.0208   8.2500
41.0208   0.3333
48.3333   8.2500
* code 1203 - profile 1
    5    2    3    4
0.000     0.750
1.000     0.750
3.833     1.125
6.667     1.500
7.313     1.500
* code 1203 - profile 2
    7    2    3    4
0.000     1.500
0.646     1.500
4.646     0.750
8.427     0.750
12.208    0.750
16.208    1.500
16.854    1.500
* code 1203 - profile 3
    5    2    3    4
0.000     1.500
0.646     1.500
3.479     1.125
6.313     0.750
7.313     0.750
* code 1203 - profile 4
    5    2    3    4
0.000     0.667
0.646     0.667
8.427     0.667
16.208    0.667
16.854    0.667
* code 1203 - profile 5
    5    2    3    4
0.000     1.292
0.750     1.292
4.167     1.292
7.583     1.292
7.917     1.292
* code 1204 - assembling boxgirder
    1    2    1
    2    4    2
    4    6    2
    6    8    3
    3    5    4
    5    7    4
    2    3    5
    4    5    5
```

1II_A_R4_EL.txt 9/11/2009

```
    6    7    5
* code 1205 control code
    1    2   13    1    1    0    4    8     1.0       1.0
* code 1206 wheels/axle
       0.0
       1.5
       6.0
       7.5 0.833
* code 1207 definition axles
0.00      12.00
9.00      16.00
12.50     16.00
21.50     18.00
30.50     18.00
39.50     18.00
48.50     18.00
57.50     18.00
* code 1208 - accuracy
0.00001   0.00001   0.00001   .00001    .00001
* code 1209 number sections
   33
   1A   1B   1C   1R   2L   2A   2B   2C   2R   3L   3A   3B   3C   3R
   4L   4A   4B   4C   5A   5B   5C   6A   6B   6C
   7L   7A   7B   8L   8A   8B   9L   9A   9B
* code 1210 - density conrete
0.156
* code 1211 - extra forces selfweight

* code 1212 - surcharge
1.2083
* code 1213 - Prestressing Layout - NONE
```

```
* start ; column 11-30 can be used to have your own text on the top of each page
*   5   10   15   20   25   30   35   40   45   50   55   60   65   70   75   80
*   V    V    V    V    V    V    V    V    V    V    V    V    V    V    V    V
00001  1 1     VEH: R5 - MICHIGAN TRUCK TRAIN No. 8
* code 1001
Cline Avenue - Load Rating - Double Box - 3 Webs - 48'-4" Wide
* code 1002
    2         1
* code 1003
*   5   10   15   20   25   30   35   40   45   50   55   60   65   70   75   80
*   V    V    V    V    V    V    V    V    V    V    V    V    V    V    V    V
250.0      102.0      48.33    1.0       1.0       1.3
* code 1004
    1    0    2
* code 1005
* Vehicle weight is 134.2 Kips, rounded to 135
  135    1
* code 1005a
* location traffic lanes
7.667
* maximum and minimum truck
6.667     41.667    10.000
* code 1007, linear loads
0.7350    0.441
47.5983   0.441
* code 1201
    8    5    4    2    3
* code 1202 coordinates
 0.0000   8.2500
 7.3125   8.2500
 7.3125   0.3333
24.1667   8.2500
24.1667   0.3333
41.0208   8.2500
41.0208   0.3333
48.3333   8.2500
* code 1203 - profile 1
    5    2    3    4
0.000     0.750
1.000     0.750
3.833     1.125
6.667     1.500
7.313     1.500
* code 1203 - profile 2
    7    2    3    4
0.000     1.500
0.646     1.500
4.646     0.750
8.427     0.750
12.208    0.750
16.208    1.500
16.854    1.500
* code 1203 - profile 3
    5    2    3    4
0.000     1.500
0.646     1.500
3.479     1.125
6.313     0.750
7.313     0.750
* code 1203 - profile 4
    5    2    3    4
0.000     0.667
0.646     0.667
8.427     0.667
16.208    0.667
16.854    0.667
* code 1203 - profile 5
    5    2    3    4
0.000     1.292
0.750     1.292
4.167     1.292
7.583     1.292
7.917     1.292
* code 1204 - assembling boxgirder
    1    2    1
    2    4    2
    4    6    2
    6    8    3
    3    5    4
    5    7    4
    2    3    5
```

```
    4    5    5
    6    7    5
* code 1205 control code
    1    2   13    1    1    0    4   11     1.0       1.0
* code 1206 wheels/axle
       0.0
       1.5
       6.0
       7.5 0.833
* code 1207 definition axles
0.00      12.00
9.00      13.40
12.50     13.40
21.50     10.90
25.00     10.90
28.50     10.90
32.00     10.90
35.50     10.90
39.00     10.90
48.00     15.00
57.00     15.00
* code 1208 - accuracy
0.00001   0.00001   0.00001   .00001    .00001
* code 1209 number sections
   33
   1A   1B   1C   1R   2L   2A   2B   2C   2R   3L   3A   3B   3C   3R
   4L   4A   4B   4C   5A   5B   5C   6A   6B   6C
   7L   7A   7B   8L   8A   8B   9L   9A   9B
* code 1210 - density conrete
0.156
* code 1211 - extra forces selfweight

* code 1212 - surcharge
1.2083
* code 1213 - Prestressing Layout - NONE
```

```
* start ; column 11-30 can be used to have your own text on the top of each page
*   5   10   15   20   25   30   35   40   45   50   55   60   65   70   75   80
*   V    V    V    V    V    V    V    V    V    V    V    V    V    V    V    V
00001  1 1     VEH: S1 - SPECIAL TRUCK 11 AXLE - SINGLE TRUCK
* code 1001
Cline Avenue - Load Rating - Double Box - 3 Webs - 48'-4" Wide
* code 1002
    2         1
* code 1003
*   5   10   15   20   25   30   35   40   45   50   55   60   65   70   75   80
*   V    V    V    V    V    V    V    V    V    V    V    V    V    V    V    V
250.0      102.0      48.33    1.0       1.0       1.3
* code 1004
    1    0    2
* code 1005
  258    1
* code 1005a
* location traffic lanes
7.667
* maximum and minimum truck
6.667     41.667    10.000
* code 1007, linear loads
0.7350    0.441
47.5983   0.441
* code 1201
    8    5    4    2    3
* code 1202 coordinates
 0.0000   8.2500
 7.3125   8.2500
 7.3125   0.3333
24.1667   8.2500
24.1667   0.3333
41.0208   8.2500
41.0208   0.3333
48.3333   8.2500
* code 1203 - profile 1
    5    2    3    4
0.000     0.750
1.000     0.750
3.833     1.125
6.667     1.500
7.313     1.500
* code 1203 - profile 2
    7    2    3    4
0.000     1.500
0.646     1.500
4.646     0.750
8.427     0.750
12.208    0.750
16.208    1.500
16.854    1.500
* code 1203 - profile 3
    5    2    3    4
0.000     1.500
0.646     1.500
3.479     1.125
6.313     0.750
7.313     0.750
* code 1203 - profile 4
    5    2    3    4
0.000     0.667
0.646     0.667
8.427     0.667
16.208    0.667
16.854    0.667
* code 1203 - profile 5
    5    2    3    4
0.000     1.292
0.750     1.292
4.167     1.292
7.583     1.292
7.917     1.292
* code 1204 - assembling boxgirder
    1    2    1
    2    4    2
    4    6    2
    6    8    3
    3    5    4
    5    7    4
    2    3    5
    4    5    5
```

1II_A_S1_EL.txt 9/11/2009

```
    6    7    5
* code 1205 control code
    1    2   13    1    1    0    4   11     1.0       1.0
* code 1206 wheels/axle
       0.0
       1.5
       6.0
       7.5 0.833
* code 1207 definition axles
0.00      12.00
11.50     24.60
16.67     24.60
21.67     24.60
34.83     24.60
39.33     24.60
89.92     24.60
94.42     24.60
98.92     24.60
112.50     24.60
117.00     24.60
* code 1208 - accuracy
0.00001   0.00001   0.00001   .00001    .00001
* code 1209 number sections
   33
   1A   1B   1C   1R   2L   2A   2B   2C   2R   3L   3A   3B   3C   3R
   4L   4A   4B   4C   5A   5B   5C   6A   6B   6C
   7L   7A   7B   8L   8A   8B   9L   9A   9B
* code 1210 - density conrete
0.156
* code 1211 - extra forces selfweight

* code 1212 - surcharge
1.2083
* code 1213 - Prestressing Layout - NONE
```

```
* start ; column 11-30 can be used to have your own text on the top of each page
*   5   10   15   20   25   30   35   40   45   50   55   60   65   70   75   80
*   V    V    V    V    V    V    V    V    V    V    V    V    V    V    V    V
00001  1 1     VEH: S2 - SPECIAL TRUCK - 13 AXLE - SINGLE TRUCK
* code 1001
Cline Avenue - Load Rating - Double Box - 3 Webs - 48'-4" Wide
* code 1002
    2         1
* code 1003
*   5   10   15   20   25   30   35   40   45   50   55   60   65   70   75   80
*   V    V    V    V    V    V    V    V    V    V    V    V    V    V    V    V
250.0      102.0      48.33    1.0       1.0       1.3
* code 1004
    1    0    2
* code 1005
  267    1
* code 1005a
* location traffic lanes
7.667     19.667
* maximum and minimum truck
6.667     41.667    10.000
* code 1007, linear loads
0.7350    0.441
47.5983   0.441
* code 1201
    8    5    4    2    3
* code 1202 coordinates
 0.0000   8.2500
 7.3125   8.2500
 7.3125   0.3333
24.1667   8.2500
24.1667   0.3333
41.0208   8.2500
41.0208   0.3333
48.3333   8.2500
* code 1203 - profile 1
    5    2    3    4
0.000     0.750
1.000     0.750
3.833     1.125
6.667     1.500
7.313     1.500
* code 1203 - profile 2
    7    2    3    4
0.000     1.500
0.646     1.500
4.646     0.750
8.427     0.750
12.208    0.750
16.208    1.500
16.854    1.500
* code 1203 - profile 3
    5    2    3    4
0.000     1.500
0.646     1.500
3.479     1.125
6.313     0.750
7.313     0.750
* code 1203 - profile 4
    5    2    3    4
0.000     0.667
0.646     0.667
8.427     0.667
16.208    0.667
16.854    0.667
* code 1203 - profile 5
    5    2    3    4
0.000     1.292
0.750     1.292
4.167     1.292
7.583     1.292
7.917     1.292
* code 1204 - assembling boxgirder
    1    2    1
    2    4    2
    4    6    2
    6    8    3
    3    5    4
    5    7    4
    2    3    5
    4    5    5
```

1II_A_S2_EL.txt 9/11/2009

```
    6    7    5
* code 1205 control code
    1    2   13    1    1    0    4   13     1.0       1.0
* code 1206 wheels/axle
       0.0
       1.5
       6.0
       7.5 0.833
* code 1207 definition axles
0.00      15.00
16.50     21.00
21.00     21.00
25.50     21.00
39.50     21.00
44.00     21.00
48.50     21.00
96.50     21.00
101.00    21.00
105.50    21.00
121.00    21.00
125.50    21.00
130.00    21.00
* code 1208 - accuracy
0.00001   0.00001   0.00001   .00001    .00001
* code 1209 number sections
   33
   1A   1B   1C   1R   2L   2A   2B   2C   2R   3L   3A   3B   3C   3R
   4L   4A   4B   4C   5A   5B   5C   6A   6B   6C
   7L   7A   7B   8L   8A   8B   9L   9A   9B
* code 1210 - density conrete
0.156
* code 1211 - extra forces selfweight

* code 1212 - surcharge
1.2083
* code 1213 - Prestressing Layout - NONE
```

```
* start ; column 11-30 can be used to have your own text on the top of each page
*   5   10   15   20   25   30   35   40   45   50   55   60   65   70   75   80
*   V    V    V    V    V    V    V    V    V    V    V    V    V    V    V    V
00001  1 1     VEH: S3 - SPECIAL TRUCK - 14 AXLE - SINGLE TRUCK
* code 1001
Cline Avenue - Load Rating - Double Box - 3 Webs - 48'-4" Wide
* code 1002
    2         1
* code 1003
*   5   10   15   20   25   30   35   40   45   50   55   60   65   70   75   80
*   V    V    V    V    V    V    V    V    V    V    V    V    V    V    V    V
250.0      102.0      48.33    1.0       1.0       1.3
* code 1004
    1    0    2
* code 1005
  350    1
* code 1005a
* location traffic lanes
7.667
* maximum and minimum truck
6.667     41.667    10.000
* code 1007, linear loads
0.7350    0.441
47.5983   0.441
* code 1201
    8    5    4    2    3
* code 1202 coordinates
 0.0000   8.2500
 7.3125   8.2500
 7.3125   0.3333
24.1667   8.2500
24.1667   0.3333
41.0208   8.2500
41.0208   0.3333
48.3333   8.2500
* code 1203 - profile 1
    5    2    3    4
0.000     0.750
1.000     0.750
3.833     1.125
6.667     1.500
7.313     1.500
* code 1203 - profile 2
    7    2    3    4
0.000     1.500
0.646     1.500
4.646     0.750
8.427     0.750
12.208    0.750
16.208    1.500
16.854    1.500
* code 1203 - profile 3
    5    2    3    4
0.000     1.500
0.646     1.500
3.479     1.125
6.313     0.750
7.313     0.750
* code 1203 - profile 4
    5    2    3    4
0.000     0.667
0.646     0.667
8.427     0.667
16.208    0.667
16.854    0.667
* code 1203 - profile 5
    5    2    3    4
0.000     1.292
0.750     1.292
4.167     1.292
7.583     1.292
7.917     1.292
* code 1204 - assembling boxgirder
    1    2    1
    2    4    2
    4    6    2
    6    8    3
    3    5    4
    5    7    4
    2    3    5
    4    5    5
```

1II_A_S3_EL.txt 9/11/2009

```
    6    7    5
* code 1205 control code
    1    2   13    1    1    0    4   14     1.0       1.0
* code 1206 wheels/axle
       0.0
       1.5
       6.0
       7.5 0.833
* code 1207 definition axles
0.00      13.00
14.50     25.00
19.00     25.00
23.50     25.00
50.50     23.50
54.67     23.50
58.83     23.50
102.83    23.50
107.33    28.00
111.83    28.00
116.33    28.00
132.17    28.00
136.67    28.00
141.17    28.00
* code 1208 - accuracy
0.00001   0.00001   0.00001   .00001    .00001
* code 1209 number sections
   33
   1A   1B   1C   1R   2L   2A   2B   2C   2R   3L   3A   3B   3C   3R
   4L   4A   4B   4C   5A   5B   5C   6A   6B   6C
   7L   7A   7B   8L   8A   8B   9L   9A   9B
* code 1210 - density conrete
0.156
* code 1211 - extra forces selfweight

* code 1212 - surcharge
1.2083
* code 1213 - Prestressing Layout - NONE
```

```
* start ; column 11-30 can be used to have your own text on the top of each page
*   5   10   15   20   25   30   35   40   45   50   55   60   65   70   75   80
*   V    V    V    V    V    V    V    V    V    V    V    V    V    V    V    V
00001  1 1     VEH: S4 - SUPER LOAD -19 AXLES - SINGLE TRUCK
* code 1001
Cline Avenue - Load Rating - Double Box - 3 Webs - 48'-4" Wide
* code 1002
    2         1
* code 1003
*   5   10   15   20   25   30   35   40   45   50   55   60   65   70   75   80
*   V    V    V    V    V    V    V    V    V    V    V    V    V    V    V    V
250.0      102.0      48.33    1.0       1.0       1.3
* code 1004
    1    0    2
* code 1005
  305    1
* code 1005a
* location traffic lanes
7.667
* maximum and minimum truck
6.667     41.667    10.000
* code 1007, linear loads
0.7350    0.441
47.5983   0.441
* code 1201
    8    5    4    2    3
* code 1202 coordinates
 0.0000   8.2500
 7.3125   8.2500
 7.3125   0.3333
24.1667   8.2500
24.1667   0.3333
41.0208   8.2500
41.0208   0.3333
48.3333   8.2500
* code 1203 - profile 1
    5    2    3    4
0.000     0.750
1.000     0.750
3.833     1.125
6.667     1.500
7.313     1.500
* code 1203 - profile 2
    7    2    3    4
0.000     1.500
0.646     1.500
4.646     0.750
8.427     0.750
12.208    0.750
16.208    1.500
16.854    1.500
* code 1203 - profile 3
    5    2    3    4
0.000     1.500
0.646     1.500
3.479     1.125
6.313     0.750
7.313     0.750
* code 1203 - profile 4
    5    2    3    4
0.000     0.667
0.646     0.667
8.427     0.667
16.208    0.667
16.854    0.667
* code 1203 - profile 5
    5    2    3    4
0.000     1.292
0.750     1.292
4.167     1.292
7.583     1.292
7.917     1.292
* code 1204 - assembling boxgirder
    1    2    1
    2    4    2
    4    6    2
    6    8    3
    3    5    4
    5    7    4
    2    3    5
    4    5    5
```

1II_A_S4_EL.txt 9/11/2009

```
    6    7    5
* code 1205 control code
    1    2   13    1    1    0    4   19     1.0       1.0
* code 1206 wheels/axle
       0.0
       1.5
       6.0
       7.5 0.833
* code 1207 definition axles
0.00      13.00
13.50     16.48
17.83     16.48
31.33     16.48
35.42     15.99
39.50     15.99
45.50     15.99
49.58     16.37
53.67     16.37
103.58    16.37
107.67    16.64
114.17    16.64
118.25    15.15
122.33    15.15
126.42    15.15
135.92    15.15
140.00    17.20
144.08    17.20
148.17    17.20
* code 1208 - accuracy
0.00001   0.00001   0.00001   .00001    .00001
* code 1209 number sections
   33
   1A   1B   1C   1R   2L   2A   2B   2C   2R   3L   3A   3B   3C   3R
   4L   4A   4B   4C   5A   5B   5C   6A   6B   6C
   7L   7A   7B   8L   8A   8B   9L   9A   9B
* code 1210 - density conrete
0.156
* code 1211 - extra forces selfweight

* code 1212 - surcharge
1.2083
* code 1213 - Prestressing Layout - NONE
```

```
* start ; column 11-30 can be used to have your own text on the top of each page
00001  1 1     VEH: S5 - SUPERLOAD - 19 AXLE - SINGLE TRUCK
* code 1001
Cline Avenue - Load Rating - Double Box - 3 Webs - 48'-4" Wide
* code 1002
    2         1
* code 1003
250.0      102.0      48.33    1.0       1.0       1.3
* code 1004
    1    0    2
* code 1005
  480    1
* code 1005a
* location traffic lanes
7.667
* maximum and minimum truck
6.667     41.667    10.000
* code 1007, linear loads
0.7350    0.441
47.5983   0.441
* code 1201
    8    5    4    2    3
* code 1202 coordinates
 0.0000   8.2500
 7.3125   8.2500
 7.3125   0.3333
24.1667   8.2500
24.1667   0.3333
41.0208   8.2500
41.0208   0.3333
48.3333   8.2500
* code 1203 - profile 1
    5    2    3    4
0.000     0.750
1.000     0.750
3.833     1.125
6.667     1.500
7.313     1.500
* code 1203 - profile 2
    7    2    3    4
0.000     1.500
0.646     1.500
4.646     0.750
8.427     0.750
12.208    0.750
16.208    1.500
16.854    1.500
* code 1203 - profile 3
    5    2    3    4
0.000     1.500
0.646     1.500
3.479     1.125
6.313     0.750
7.313     0.750
* code 1203 - profile 4
    5    2    3    4
0.000     0.667
0.646     0.667
8.427     0.667
16.208    0.667
16.854    0.667
* code 1203 - profile 5
    5    2    3    4
0.000     1.292
0.750     1.292
4.167     1.292
7.583     1.292
7.917     1.292
* code 1204 - assembling boxgirder
    1    2    1
    2    4    2
    4    6    2
    6    8    3
    3    5    4
    5    7    4
    2    3    5
    4    5    5
    6    7    5
* code 1205 control code
    1    2   13    1    1    0    4   19     1.0       1.0
* code 1206 wheels/axle
```

1II_A_S5_EL.txt 9/11/2009

```
       0.0
       1.5
       6.0
       7.5 0.833
* code 1207 definition axles
0.00      12.88
12.50     25.95
17.50     25.95
31.58     25.95
36.58     25.95
41.58     25.95
55.67     25.95
60.67     25.95
65.67     25.95
115.67    25.95
120.67    25.95
125.67    25.95
139.75    25.95
144.75    25.95
149.75    25.95
163.83    25.95
168.83    25.95
173.83    25.95
178.83    25.95
* code 1208 - accuracy
0.00001   0.00001   0.00001   .00001    .00001
* code 1209 number sections
   33
   1A   1B   1C   1R   2L   2A   2B   2C   2R   3L   3A   3B   3C   3R
   4L   4A   4B   4C   5A   5B   5C   6A   6B   6C
   7L   7A   7B   8L   8A   8B   9L   9A   9B
* code 1210 - density conrete
0.156
* code 1211 - extra forces selfweight

* code 1212 - surcharge
1.2083
* code 1213 - Prestressing Layout - NONE
```

```
II_A_HL93_truck_EL.txt                                                                    9/11/2009

* start ; column 11-30 can be used to have your own text on the top of each page
*   5   10   15   20   25   30   35   40   45   50   55   60   65   70   75   80
*   V    V    V    V    V    V    V    V    V    V    V    V    V    V    V    V
00001  1 1     VEH: HL93- TRUCK
* code 1001
Cline Avenue - Load Rating - Double Box - 3 Webs - 48'-4" Wide
* code 1002
    2         1
* code 1003
*   5   10   15   20   25   30   35   40   45   50   55   60   65   70   75   80
*   V    V    V    V    V    V    V    V    V    V    V    V    V    V    V    V
250.0      102.0      48.33    1.0       1.0       1.3
* code 1004
    2    0    2
* code 1005
   72
* code 1005a
* location traffic lanes
7.667     19.667
* maximum and minimum truck
6.667     41.667    10.000
* code 1007, linear loads
0.7350    0.441
47.5983   0.441
* code 1201
    8    5    4    2    3
* code 1202 coordinates
 0.0000   8.2500
 7.3125   8.2500
 7.3125   0.3333
24.1667   8.2500
24.1667   0.3333
41.0208   8.2500
41.0208   0.3333
48.3333   8.2500
* code 1203 - profile 1
    5    2    3    4
0.000     0.750
1.000     0.750
3.833     1.125
6.667     1.500
7.313     1.500
* code 1203 - profile 2
    7    2    3    4
0.000     1.500
0.646     1.500
4.646     0.750
8.427     0.750
12.208    0.750
16.208    1.500
16.854    1.500
* code 1203 - profile 3
    5    2    3    4
0.000     1.500
0.646     1.500
3.479     1.125
6.313     0.750
7.313     0.750
* code 1203 - profile 4
    5    2    3    4
0.000     0.667
0.646     0.667
8.427     0.667
16.208    0.667
16.854    0.667
* code 1203 - profile 5
    5    2    3    4
0.000     1.292
0.750     1.292
4.167     1.292
7.583     1.292
7.917     1.292
* code 1204 - assembling boxgirder
    1    2    1
    2    4    2
    4    6    2
    6    8    3
    3    5    4
    5    7    4
    2    3    5
    4    5    5
```

```
    6    7    5
* code 1205 control code
    1    2   13    1    1    0    4    3     1.0       1.0
* code 1206 wheels/axle
       0.0
       1.5
       6.0
       7.5 0.833
* code 1207 definition axles
0.0       0.1
14.0      0.4
28.0      0.4
* code 1208 - accuracy
0.00001   0.00001   0.00001   .00001    .00001
* code 1209 number sections
   33
   1A   1B   1C   1R   2L   2A   2B   2C   2R   3L   3A   3B   3C   3R
   4L   4A   4B   4C   5A   5B   5C   6A   6B   6C
   7L   7A   7B   8L   8A   8B   9L   9A   9B
* code 1210 - density conrete
0.156
* code 1211 - extra forces selfweight

* code 1212 - surcharge
1.2083
* code 1213 - Prestressing Layout - NONE
```

```
* start ; column 11-30 can be used to have your own text on the top of each page
*   5   10   15   20   25   30   35   40   45   50   55   60   65   70   75   80
*   V    V    V    V    V    V    V    V    V    V    V    V    V    V    V    V
00001  1 1     VEH: HL93- TANDEM
* code 1001
Cline Avenue - Load Rating - Double Box - 3 Webs - 48'-4" Wide
* code 1002
    2         1
* code 1003
*   5   10   15   20   25   30   35   40   45   50   55   60   65   70   75   80
*   V    V    V    V    V    V    V    V    V    V    V    V    V    V    V    V
250.0      102.0      48.33    1.0       1.0       1.3
* code 1004
    2    0    2
* code 1005
   50
* code 1005a
* location traffic lanes
7.667     19.667
* maximum and minimum truck
6.667     41.667    10.000
* code 1007, linear loads
0.7350    0.441
47.5983   0.441
* code 1201
    8    5    4    2    3
* code 1202 coordinates
 0.0000   8.2500
 7.3125   8.2500
 7.3125   0.3333
24.1667   8.2500
24.1667   0.3333
41.0208   8.2500
41.0208   0.3333
48.3333   8.2500
* code 1203 - profile 1
    5    2    3    4
0.000     0.750
1.000     0.750
3.833     1.125
6.667     1.500
7.313     1.500
* code 1203 - profile 2
    7    2    3    4
0.000     1.500
0.646     1.500
4.646     0.750
8.427     0.750
12.208    0.750
16.208    1.500
16.854    1.500
* code 1203 - profile 3
    5    2    3    4
0.000     1.500
0.646     1.500
3.479     1.125
6.313     0.750
7.313     0.750
* code 1203 - profile 4
    5    2    3    4
0.000     0.667
0.646     0.667
8.427     0.667
16.208    0.667
16.854    0.667
* code 1203 - profile 5
    5    2    3    4
0.000     1.292
0.750     1.292
4.167     1.292
7.583     1.292
7.917     1.292
* code 1204 - assembling boxgirder
    1    2    1
    2    4    2
    4    6    2
    6    8    3
    3    5    4
    5    7    4
    2    3    5
    4    5    5
```

```
    6    7    5
* code 1205 control code
    1    2   13    1    1    0    4    2     1.0       1.0
* code 1206 wheels/axle
       0.0
       1.5
       6.0
       7.5 0.833
* code 1207 definition axles
0.0       0.5
4.0       0.5
* code 1208 - accuracy
0.00001   0.00001   0.00001   .00001    .00001
* code 1209 number sections
   33
   1A   1B   1C   1R   2L   2A   2B   2C   2R   3L   3A   3B   3C   3R
   4L   4A   4B   4C   5A   5B   5C   6A   6B   6C
   7L   7A   7B   8L   8A   8B   9L   9A   9B
* code 1210 - density conrete
0.156
* code 1211 - extra forces selfweight

* code 1212 - surcharge
1.2083
* code 1213 - Prestressing Layout - NONE
```

```
II_A_R1_EL.txt                                                                                    9/11/2009

* start ; column 11-30 can be used to have your own text on the top of each page
00001  1 1     VEH: R1 - TOLL ROAD LOADING No. 1
* code 1001
Cline Avenue - Load Rating - Double Box - 3 Webs - 48'-4" Wide
* code 1002
    2         1
* code 1003
250.0      102.0      48.33    1.0       1.0       1.3
* code 1004
    2    0    2
* code 1005
   90
* code 1005a
* location traffic lanes
7.667     19.667
* maximum and minimum truck
6.667     41.667    10.000
* code 1007, linear loads
0.7350    0.441
47.5983   0.441
* code 1201
    8    5    4    2    3
* code 1202 coordinates
 0.0000   8.2500
 7.3125   8.2500
 7.3125   0.3333
24.1667   8.2500
24.1667   0.3333
41.0208   8.2500
41.0208   0.3333
48.3333   8.2500
* code 1203 - profile 1
    5    2    3    4
0.000     0.750
1.000     0.750
3.833     1.125
6.667     1.500
7.313     1.500
* code 1203 - profile 2
    7    2    3    4
0.000     1.500
0.646     1.500
4.646     0.750
8.427     0.750
12.208    0.750
16.208    1.500
16.854    1.500
* code 1203 - profile 3
    5    2    3    4
0.000     1.500
0.646     1.500
3.479     1.125
6.313     0.750
7.313     0.750
* code 1203 - profile 4
    5    2    3    4
0.000     0.667
0.646     0.667
8.427     0.667
16.208    0.667
16.854    0.667
* code 1203 - profile 5
    5    2    3    4
0.000     1.292
0.750     1.292
4.167     1.292
7.583     1.292
7.917     1.292
* code 1204 - assembling boxgirder
    1    2    1
    2    4    2
    4    6    2
    6    8    3
    3    5    4
    5    7    4
    2    3    5
    4    5    5
    6    7    5
* code 1205 control code
    1    2   13    1    1    0    4    5     1.0       1.0
* code 1206 wheels/axle
```

```
       0.0
       1.5
       6.0
       7.5 0.833
* code 1207 definition axles
0.00      18.00
10.00     18.00
14.00     18.00
24.00     18.00
28.00     18.00
* code 1208 - accuracy
0.00001   0.00001   0.00001   .00001    .00001
* code 1209 number sections
   33
   1A   1B   1C   1R   2L   2A   2B   2C   2R   3L   3A   3B   3C   3R
   4L   4A   4B   4C   5A   5B   5C   6A   6B   6C
   7L   7A   7B   8L   8A   8B   9L   9A   9B
* code 1210 - density conrete
0.156
* code 1211 - extra forces selfweight

* code 1212 - surcharge
1.2083
* code 1213 - Prestressing Layout - NONE
```

```
* start ; column 11-30 can be used to have your own text on the top of each page
*   5   10   15   20   25   30   35   40   45   50   55   60   65   70   75   80
*   V    V    V    V    V    V    V    V    V    V    V    V    V    V    V    V
00001  1 1     VEH: R2 - TOLL ROAD LOADING No. 2
* code 1001
Cline Avenue - Load Rating - Double Box - 3 Webs - 48'-4" Wide
* code 1002
    2         1
* code 1003
*   5   10   15   20   25   30   35   40   45   50   55   60   65   70   75   80
*   V    V    V    V    V    V    V    V    V    V    V    V    V    V    V    V
250.0      102.0      48.33    1.0       1.0       1.3
* code 1004
    2    0    2
* code 1005
   90
* code 1005a
* location traffic lanes
7.667     19.667
* maximum and minimum truck
6.667     41.667    10.000
* code 1007, linear loads
0.7350    0.441
47.5983   0.441
* code 1201
    8    5    4    2    3
* code 1202 coordinates
 0.0000   8.2500
 7.3125   8.2500
 7.3125   0.3333
24.1667   8.2500
24.1667   0.3333
41.0208   8.2500
41.0208   0.3333
48.3333   8.2500
* code 1203 - profile 1
    5    2    3    4
0.000     0.750
1.000     0.750
3.833     1.125
6.667     1.500
7.313     1.500
* code 1203 - profile 2
    7    2    3    4
0.000     1.500
0.646     1.500
4.646     0.750
8.427     0.750
12.208    0.750
16.208    1.500
16.854    1.500
* code 1203 - profile 3
    5    2    3    4
0.000     1.500
0.646     1.500
3.479     1.125
6.313     0.750
7.313     0.750
* code 1203 - profile 4
    5    2    3    4
0.000     0.667
0.646     0.667
8.427     0.667
16.208    0.667
16.854    0.667
* code 1203 - profile 5
    5    2    3    4
0.000     1.292
0.750     1.292
4.167     1.292
7.583     1.292
7.917     1.292
* code 1204 - assembling boxgirder
    1    2    1
    2    4    2
    4    6    2
    6    8    3
    3    5    4
    5    7    4
    2    3    5
    4    5    5
```

```
    6    7    5
* code 1205 control code
    1    2   13    1    1    0    4    4     1.0       1.0
* code 1206 wheels/axle
       0.0
       1.5
       6.0
       7.5 0.833
* code 1207 definition axles
0.00      22.50
14.00     22.50
23.00     22.50
37.00     22.50
* code 1208 - accuracy
0.00001   0.00001   0.00001   .00001    .00001
* code 1209 number sections
   33
   1A   1B   1C   1R   2L   2A   2B   2C   2R   3L   3A   3B   3C   3R
   4L   4A   4B   4C   5A   5B   5C   6A   6B   6C
   7L   7A   7B   8L   8A   8B   9L   9A   9B
* code 1210 - density conrete
0.156
* code 1211 - extra forces selfweight

* code 1212 - surcharge
1.2083
* code 1213 - Prestressing Layout - NONE
```

```
* start ; column 11-30 can be used to have your own text on the top of each page
00001  1 1     VEH: R3 - TOLL ROAD LOADING No. 3
* code 1001
Cline Avenue - Load Rating - Double Box - 3 Webs - 48'-4" Wide
* code 1002
    2         1
* code 1003
*   5   10   15   20   25   30   35   40   45   50   55   60   65   70   75   80
*   V    V    V    V    V    V    V    V    V    V    V    V    V    V    V    V
250.0      102.0      48.33    1.0       1.0       1.3
* code 1004
    2    0    2
* code 1005
  126
* code 1005a
* location traffic lanes
7.667     19.667
* maximum and minimum truck
6.667     41.667    10.000
* code 1007, linear loads
0.7350    0.441
47.5983   0.441
* code 1201
    8    5    4    2    3
* code 1202 coordinates
 0.0000   8.2500
 7.3125   8.2500
 7.3125   0.3333
24.1667   8.2500
24.1667   0.3333
41.0208   8.2500
41.0208   0.3333
48.3333   8.2500
* code 1203 - profile 1
    5    2    3    4
0.000     0.750
1.000     0.750
3.833     1.125
6.667     1.500
7.313     1.500
* code 1203 - profile 2
    7    2    3    4
0.000     1.500
0.646     1.500
4.646     0.750
8.427     0.750
12.208    0.750
16.208    1.500
16.854    1.500
* code 1203 - profile 3
    5    2    3    4
0.000     1.500
0.646     1.500
3.479     1.125
6.313     0.750
7.313     0.750
* code 1203 - profile 4
    5    2    3    4
0.000     0.667
0.646     0.667
8.427     0.667
16.208    0.667
16.854    0.667
* code 1203 - profile 5
    5    2    3    4
0.000     1.292
0.750     1.292
4.167     1.292
7.583     1.292
7.917     1.292
* code 1204 - assembling boxgirder
    1    2    1
    2    4    2
    4    6    2
    6    8    3
    3    5    4
    5    7    4
    2    3    5
    4    5    5
    6    7    5
* code 1205 control code
```

II_A_R3_EL.txt 9/11/2009

```
    1    2   13    1    1    0    4    7     1.0       1.0
* code 1206 wheels/axle
       0.0
       1.5
       6.0
       7.5 0.833
* code 1207 definition axles
0.00      18.00
10.00     18.00
14.00     18.00
40.00     18.00
44.00     18.00
56.00     18.00
76.00     18.00
* code 1208 - accuracy
0.00001   0.00001   0.00001   .00001    .00001
* code 1209 number sections
   33
   1A   1B   1C   1R   2L   2A   2B   2C   2R   3L   3A   3B   3C   3R
   4L   4A   4B   4C   5A   5B   5C   6A   6B   6C
   7L   7A   7B   8L   8A   8B   9L   9A   9B
* code 1210 - density conrete
0.156
* code 1211 - extra forces selfweight

* code 1212 - surcharge
1.2083
* code 1213 - Prestressing Layout - NONE
```

```
* start ; column 11-30 can be used to have your own text on the top of each page
00001  1 1     VEH: R4 - MICHIGAN TRUCK TRAIN No.5
* code 1001
Cline Avenue - Load Rating - Double Box - 3 Webs - 48'-4" Wide
* code 1002
    2         1
* code 1003
*   5   10   15   20   25   30   35   40   45   50   55   60   65   70   75   80
*   V    V    V    V    V    V    V    V    V    V    V    V    V    V    V    V
250.0      102.0      48.33    1.0       1.0       1.3
* code 1004
    2    0    2
* code 1005
  134
* code 1005a
* location traffic lanes
7.667     19.667
* maximum and minimum truck
6.667     41.667    10.000
* code 1007, linear loads
0.7350    0.441
47.5983   0.441
* code 1201
    8    5    4    2    3
* code 1202 coordinates
 0.0000   8.2500
 7.3125   8.2500
 7.3125   0.3333
24.1667   8.2500
24.1667   0.3333
41.0208   8.2500
41.0208   0.3333
48.3333   8.2500
* code 1203 - profile 1
    5    2    3    4
0.000     0.750
1.000     0.750
3.833     1.125
6.667     1.500
7.313     1.500
* code 1203 - profile 2
    7    2    3    4
0.000     1.500
0.646     1.500
4.646     0.750
8.427     0.750
12.208    0.750
16.208    1.500
16.854    1.500
* code 1203 - profile 3
    5    2    3    4
0.000     1.500
0.646     1.500
3.479     1.125
6.313     0.750
7.313     0.750
* code 1203 - profile 4
    5    2    3    4
0.000     0.667
0.646     0.667
8.427     0.667
16.208    0.667
16.854    0.667
* code 1203 - profile 5
    5    2    3    4
0.000     1.292
0.750     1.292
4.167     1.292
7.583     1.292
7.917     1.292
* code 1204 - assembling boxgirder
    1    2    1
    2    4    2
    4    6    2
    6    8    3
    3    5    4
    5    7    4
    2    3    5
    4    5    5
    6    7    5
* code 1205 control code
```

```
    1    2   13    1    1    0    4    8     1.0       1.0
* code 1206 wheels/axle
       0.0
       1.5
       6.0
       7.5 0.833
* code 1207 definition axles
0.00      12.00
9.00      16.00
12.50     16.00
21.50     18.00
30.50     18.00
39.50     18.00
48.50     18.00
57.50     18.00
* code 1208 - accuracy
0.00001   0.00001   0.00001   .00001    .00001
* code 1209 number sections
   33
   1A   1B   1C   1R   2L   2A   2B   2C   2R   3L   3A   3B   3C   3R
   4L   4A   4B   4C   5A   5B   5C   6A   6B   6C
   7L   7A   7B   8L   8A   8B   9L   9A   9B
* code 1210 - density conrete
0.156
* code 1211 - extra forces selfweight

* code 1212 - surcharge
1.2083
* code 1213 - Prestressing Layout - NONE
```

```
* start ; column 11-30 can be used to have your own text on the top of each page
*   5   10   15   20   25   30   35   40   45   50   55   60   65   70   75   80
*   V    V    V    V    V    V    V    V    V    V    V    V    V    V    V    V
00001  1 1     VEH: R5 - MICHIGAN TRUCK TRAIN No. 8
* code 1001
Cline Avenue - Load Rating - Double Box - 3 Webs - 48'-4" Wide
* code 1002
    2         1
* code 1003
*   5   10   15   20   25   30   35   40   45   50   55   60   65   70   75   80
*   V    V    V    V    V    V    V    V    V    V    V    V    V    V    V    V
250.0      102.0      48.33    1.0       1.0       1.3
* code 1004
    2    0    2
* code 1005
* Vehicle weight is 134.2 Kips, rounded to 135
  135
* code 1005a
* location traffic lanes
7.667     19.667
* maximum and minimum truck
6.667     41.667    10.000
* code 1007, linear loads
0.7350    0.441
47.5983   0.441
* code 1201
    8    5    4    2    3
* code 1202 coordinates
 0.0000   8.2500
 7.3125   8.2500
 7.3125   0.3333
24.1667   8.2500
24.1667   0.3333
41.0208   8.2500
41.0208   0.3333
48.3333   8.2500
* code 1203 - profile 1
    5    2    3    4
0.000     0.750
1.000     0.750
3.833     1.125
6.667     1.500
7.313     1.500
* code 1203 - profile 2
    7    2    3    4
0.000     1.500
0.646     1.500
4.646     0.750
8.427     0.750
12.208    0.750
16.208    1.500
16.854    1.500
* code 1203 - profile 3
    5    2    3    4
0.000     1.500
0.646     1.500
3.479     1.125
6.313     0.750
7.313     0.750
* code 1203 - profile 4
    5    2    3    4
0.000     0.667
0.646     0.667
8.427     0.667
16.208    0.667
16.854    0.667
* code 1203 - profile 5
    5    2    3    4
0.000     1.292
0.750     1.292
4.167     1.292
7.583     1.292
7.917     1.292
* code 1204 - assembling boxgirder
    1    2    1
    2    4    2
    4    6    2
    6    8    3
    3    5    4
    5    7    4
    2    3    5
```

```
    4    5    5
    6    7    5
* code 1205 control code
    1    2   13    1    1    0    4   11     1.0       1.0
* code 1206 wheels/axle
       0.0
       1.5
       6.0
       7.5 0.833
* code 1207 definition axles
0.00      12.00
9.00      13.40
12.50     13.40
21.50     10.90
25.00     10.90
28.50     10.90
32.00     10.90
35.50     10.90
39.00     10.90
48.00     15.00
57.00     15.00
* code 1208 - accuracy
0.00001   0.00001   0.00001   .00001    .00001
* code 1209 number sections
   33
   1A   1B   1C   1R   2L   2A   2B   2C   2R   3L   3A   3B   3C   3R
   4L   4A   4B   4C   5A   5B   5C   6A   6B   6C
   7L   7A   7B   8L   8A   8B   9L   9A   9B
* code 1210 - density conrete
0.156
* code 1211 - extra forces selfweight

* code 1212 - surcharge
1.2083
* code 1213 - Prestressing Layout - NONE
```

```
II_A_S1_EL.txt                                                                                    9/11/2009

* start ; column 11-30 can be used to have your own text on the top of each page
*   5   10   15   20   25   30   35   40   45   50   55   60   65   70   75   80
*   V    V    V    V    V    V    V    V    V    V    V    V    V    V    V    V
00001  1 1     VEH: S1 - SPECIAL TRUCK 11 AXLE
* code 1001
Cline Avenue - Load Rating - Double Box - 3 Webs - 48'-4" Wide
* code 1002
    2         1
* code 1003
*   5   10   15   20   25   30   35   40   45   50   55   60   65   70   75   80
*   V    V    V    V    V    V    V    V    V    V    V    V    V    V    V    V
250.0      102.0      48.33    1.0       1.0       1.3
* code 1004
    2    0    2
* code 1005
  258
* code 1005a
* location traffic lanes
7.667     19.667
* maximum and minimum truck
6.667     41.667    10.000
* code 1007, linear loads
0.7350    0.441
47.5983   0.441
* code 1201
    8    5    4    2    3
* code 1202 coordinates
 0.0000   8.2500
 7.3125   8.2500
 7.3125   0.3333
24.1667   8.2500
24.1667   0.3333
41.0208   8.2500
41.0208   0.3333
48.3333   8.2500
* code 1203 - profile 1
    5    2    3    4
0.000     0.750
1.000     0.750
3.833     1.125
6.667     1.500
7.313     1.500
* code 1203 - profile 2
    7    2    3    4
0.000     1.500
0.646     1.500
4.646     0.750
8.427     0.750
12.208    0.750
16.208    1.500
16.854    1.500
* code 1203 - profile 3
    5    2    3    4
0.000     1.500
0.646     1.500
3.479     1.125
6.313     0.750
7.313     0.750
* code 1203 - profile 4
    5    2    3    4
0.000     0.667
0.646     0.667
8.427     0.667
16.208    0.667
16.854    0.667
* code 1203 - profile 5
    5    2    3    4
0.000     1.292
0.750     1.292
4.167     1.292
7.583     1.292
7.917     1.292
* code 1204 - assembling boxgirder
    1    2    1
    2    4    2
    4    6    2
    6    8    3
    3    5    4
    5    7    4
    2    3    5
    4    5    5
```

```
    6    7    5
* code 1205 control code
    1    2   13    1    1    0    4   11     1.0       1.0
* code 1206 wheels/axle
       0.0
       1.5
       6.0
       7.5 0.833
* code 1207 definition axles
0.00      12.00
11.50     24.60
16.67     24.60
21.67     24.60
34.83     24.60
39.33     24.60
89.92     24.60
94.42     24.60
98.92     24.60
112.50     24.60
117.00     24.60
* code 1208 - accuracy
0.00001   0.00001   0.00001   .00001    .00001
* code 1209 number sections
   33
   1A   1B   1C   1R   2L   2A   2B   2C   2R   3L   3A   3B   3C   3R
   4L   4A   4B   4C   5A   5B   5C   6A   6B   6C
   7L   7A   7B   8L   8A   8B   9L   9A   9B
* code 1210 - density conrete
0.156
* code 1211 - extra forces selfweight

* code 1212 - surcharge
1.2083
* code 1213 - Prestressing Layout - NONE
```

```
II_A_S2_EL.txt                                                                                                                                                                                                                                                                                                                                                                                                                                                                                                                                                                                                                                                                                                                                                                                                                                                                                                                                                                                                                                                                                                                                                                                                                                                                                                                                                                                                                                                                                                                                                                                                                                                                                                                                                                                                                                                                                                                                                                                                                                                                                                                                                                                                                                                                                                                                                                                                                                                                                                                                                                                                                                                                                                                                                                                                                                                                                                                                                                                                                                                                                                                                                                                                                                                                                                                                                                                                                                                                                                                                                                                                                                                                                                                                                                                                                                                                                                                                                                                                                                                                                                                                                                                                                                                                                                                                                                                                                                                                                                                                                                                                                                                                                                                                                                                                                                                                                                                                                                                                                                                                                                                                                                                                                                                                                                                                                                                                                                                                                                                                                                                                                                                                                                                                                                                                                                                                                                                                                                                                                                                                                                                                                                                                                                                                                                                                                                                                                                                                                                                                                                                                                                                                                                                                                                                                                                                                                                                                                                                                                                                                                                                                                                                                                 9/11/2009

* start ; column 11-30 can be used to have your own text on the top of each page
*   5   10   15   20   25   30   35   40   45   50   55   60   65   70   75   80
*   V    V    V    V    V    V    V    V    V    V    V    V    V    V    V    V
00001  1 1     VEH: S2 - SPECIAL TRUCK - 13 AXLE
* code 1001
Cline Avenue - Load Rating - Double Box - 3 Webs - 48'-4" Wide
* code 1002
    2         1
* code 1003
*   5   10   15   20   25   30   35   40   45   50   55   60   65   70   75   80
*   V    V    V    V    V    V    V    V    V    V    V    V    V    V    V    V
250.0      102.0      48.33    1.0       1.0       1.3
* code 1004
    2    0    2
* code 1005
  267
* code 1005a
* location traffic lanes
7.667     19.667
* maximum and minimum truck
6.667     41.667    10.000
* code 1007, linear loads
0.7350    0.441
47.5983   0.441
* code 1201
    8    5    4    2    3
* code 1202 coordinates
 0.0000   8.2500
 7.3125   8.2500
 7.3125   0.3333
24.1667   8.2500
24.1667   0.3333
41.0208   8.2500
41.0208   0.3333
48.3333   8.2500
* code 1203 - profile 1
    5    2    3    4
0.000     0.750
1.000     0.750
3.833     1.125
6.667     1.500
7.313     1.500
* code 1203 - profile 2
    7    2    3    4
0.000     1.500
0.646     1.500
4.646     0.750
8.427     0.750
12.208    0.750
16.208    1.500
16.854    1.500
* code 1203 - profile 3
    5    2    3    4
0.000     1.500
0.646     1.500
3.479     1.125
6.313     0.750
7.313     0.750
* code 1203 - profile 4
    5    2    3    4
0.000     0.667
0.646     0.667
8.427     0.667
16.208    0.667
16.854    0.667
* code 1203 - profile 5
    5    2    3    4
0.000     1.292
0.750     1.292
4.167     1.292
7.583     1.292
7.917     1.292
* code 1204 - assembling boxgirder
    1    2    1
    2    4    2
    4    6    2
    6    8    3
    3    5    4
    5    7    4
    2    3    5
    4    5    5
```

```
    6    7    5
* code 1205 control code
    1    2   13    1    1    0    4   13     1.0       1.0
* code 1206 wheels/axle
       0.0
       1.5
       6.0
       7.5 0.833
* code 1207 definition axles
0.00      15.00
16.50     21.00
21.00     21.00
25.50     21.00
39.50     21.00
44.00     21.00
48.50     21.00
96.50     21.00
101.00    21.00
105.50    21.00
121.00    21.00
125.50    21.00
130.00    21.00
* code 1208 - accuracy
0.00001   0.00001   0.00001   .00001    .00001
* code 1209 number sections
   33
   1A   1B   1C   1R   2L   2A   2B   2C   2R   3L   3A   3B   3C   3R
   4L   4A   4B   4C   5A   5B   5C   6A   6B   6C
   7L   7A   7B   8L   8A   8B   9L   9A   9B
* code 1210 - density conrete
0.156
* code 1211 - extra forces selfweight

* code 1212 - surcharge
1.2083
* code 1213 - Prestressing Layout - NONE
```

```
II_A_S3_EL.txt                                                                                                                                                                                                                                                                                                                                                                                                                                                                                                                                                                                                                                                                                                                                                                                                                                                                                                                                                                                                                                                                                                                                                                                                                                                                                                                                                                                                                                                                                                                                                                                                                                                                                                                                                                                                                                                                                                                                                                                                                                                                                                                                                                                                                                                                                                                                                                                                                                                                                                                                                                                                                                                                                                                                                                                                                                                                                                                                                                                                                                                                                                                                                                                                                                                                                                                                                                                                                                                                                                                                                                                                                                                                                                                                                                                                                                                                                                                                                                                                                                                                                                                                                                                                                                                                                                                                                                                                                                                                                                                                                                                                                                                                                                                                                                                                                                                                                                                                                                                                                                                                                                                                                                                                                                                                                                                                                                                                                                                                                                                                                                                                                                                                                                                                                                                                                                                                                                                                                                                                                                                                                                                                                                                                                                                                                                                                                                                                                                                                                                                                                                                                                                                                                                                                                                                                                                                                                                                                                                                                                                 9/11/2009

* start ; column 11-30 can be used to have your own text on the top of each page
*   5   10   15   20   25   30   35   40   45   50   55   60   65   70   75   80
*   V    V    V    V    V    V    V    V    V    V    V    V    V    V    V    V
00001  1 1     VEH: S3 - SPECIAL TRUCK - 14 AXLE
* code 1001
Cline Avenue - Load Rating - Double Box - 3 Webs - 48'-4" Wide
* code 1002
    2         1
* code 1003
*   5   10   15   20   25   30   35   40   45   50   55   60   65   70   75   80
*   V    V    V    V    V    V    V    V    V    V    V    V    V    V    V    V
250.0      102.0      48.33    1.0       1.0       1.3
* code 1004
    2    0    2
* code 1005
  350
* code 1005a
* location traffic lanes
7.667     19.667
* maximum and minimum truck
6.667     41.667    10.000
* code 1007, linear loads
0.7350    0.441
47.5983   0.441
* code 1201
    8    5    4    2    3
* code 1202 coordinates
 0.0000   8.2500
 7.3125   8.2500
 7.3125   0.3333
24.1667   8.2500
24.1667   0.3333
41.0208   8.2500
41.0208   0.3333
48.3333   8.2500
* code 1203 - profile 1
    5    2    3    4
0.000     0.750
1.000     0.750
3.833     1.125
6.667     1.500
7.313     1.500
* code 1203 - profile 2
    7    2    3    4
0.000     1.500
0.646     1.500
4.646     0.750
8.427     0.750
12.208    0.750
16.208    1.500
16.854    1.500
* code 1203 - profile 3
    5    2    3    4
0.000     1.500
0.646     1.500
3.479     1.125
6.313     0.750
7.313     0.750
* code 1203 - profile 4
    5    2    3    4
0.000     0.667
0.646     0.667
8.427     0.667
16.208    0.667
16.854    0.667
* code 1203 - profile 5
    5    2    3    4
0.000     1.292
0.750     1.292
4.167     1.292
7.583     1.292
7.917     1.292
* code 1204 - assembling boxgirder
    1    2    1
    2    4    2
    4    6    2
    6    8    3
    3    5    4
    5    7    4
    2    3    5
    4    5    5
```

```
    6    7    5
* code 1205 control code
    1    2   13    1    1    0    4   14     1.0       1.0
* code 1206 wheels/axle
       0.0
       1.5
       6.0
       7.5 0.833
* code 1207 definition axles
0.00      13.00
14.50     25.00
19.00     25.00
23.50     25.00
50.50     23.50
54.67     23.50
58.83     23.50
102.83    23.50
107.33    28.00
111.83    28.00
116.33    28.00
132.17    28.00
136.67    28.00
141.17    28.00
* code 1208 - accuracy
0.00001   0.00001   0.00001   .00001    .00001
* code 1209 number sections
   33
   1A   1B   1C   1R   2L   2A   2B   2C   2R   3L   3A   3B   3C   3R
   4L   4A   4B   4C   5A   5B   5C   6A   6B   6C
   7L   7A   7B   8L   8A   8B   9L   9A   9B
* code 1210 - density conrete
0.156
* code 1211 - extra forces selfweight

* code 1212 - surcharge
1.2083
* code 1213 - Prestressing Layout - NONE
```

```
II_A_S4_EL.txt                                                                                    9/11/2009

* start ; column 11-30 can be used to have your own text on the top of each page
*   5   10   15   20   25   30   35   40   45   50   55   60   65   70   75   80
*   V    V    V    V    V    V    V    V    V    V    V    V    V    V    V    V
00001  1 1     VEH: S4 - SUPER LOAD -19 AXLES
* code 1001
Cline Avenue - Load Rating - Double Box - 3 Webs - 48'-4" Wide
* code 1002
    2         1
* code 1003
*   5   10   15   20   25   30   35   40   45   50   55   60   65   70   75   80
*   V    V    V    V    V    V    V    V    V    V    V    V    V    V    V    V
250.0      102.0      48.33    1.0       1.0       1.3
* code 1004
    2    0    2
* code 1005
  305
* code 1005a
* location traffic lanes
7.667     19.667
* maximum and minimum truck
6.667     41.667    10.000
* code 1007, linear loads
0.7350    0.441
47.5983   0.441
* code 1201
    8    5    4    2    3
* code 1202 coordinates
 0.0000   8.2500
 7.3125   8.2500
 7.3125   0.3333
24.1667   8.2500
24.1667   0.3333
41.0208   8.2500
41.0208   0.3333
48.3333   8.2500
* code 1203 - profile 1
    5    2    3    4
0.000     0.750
1.000     0.750
3.833     1.125
6.667     1.500
7.313     1.500
* code 1203 - profile 2
    7    2    3    4
0.000     1.500
0.646     1.500
4.646     0.750
8.427     0.750
12.208    0.750
16.208    1.500
16.854    1.500
* code 1203 - profile 3
    5    2    3    4
0.000     1.500
0.646     1.500
3.479     1.125
6.313     0.750
7.313     0.750
* code 1203 - profile 4
    5    2    3    4
0.000     0.667
0.646     0.667
8.427     0.667
16.208    0.667
16.854    0.667
* code 1203 - profile 5
    5    2    3    4
0.000     1.292
0.750     1.292
4.167     1.292
7.583     1.292
7.917     1.292
* code 1204 - assembling boxgirder
    1    2    1
    2    4    2
    4    6    2
    6    8    3
    3    5    4
    5    7    4
    2    3    5
    4    5    5
```

```
    6    7    5
* code 1205 control code
    1    2   13    1    1    0    4   19     1.0       1.0
* code 1206 wheels/axle
       0.0
       1.5
       6.0
       7.5 0.833
* code 1207 definition axles
0.00      13.00
13.50     16.48
17.83     16.48
31.33     16.48
35.42     15.99
39.50     15.99
45.50     15.99
49.58     16.37
53.67     16.37
103.58    16.37
107.67    16.64
114.17    16.64
118.25    15.15
122.33    15.15
126.42    15.15
135.92    15.15
140.00    17.20
144.08    17.20
148.17    17.20
* code 1208 - accuracy
0.00001   0.00001   0.00001   .00001    .00001
* code 1209 number sections
   33
   1A   1B   1C   1R   2L   2A   2B   2C   2R   3L   3A   3B   3C   3R
   4L   4A   4B   4C   5A   5B   5C   6A   6B   6C
   7L   7A   7B   8L   8A   8B   9L   9A   9B
* code 1210 - density conrete
0.156
* code 1211 - extra forces selfweight

* code 1212 - surcharge
1.2083
* code 1213 - Prestressing Layout - NONE
```

```
II_A_S5_EL.txt                                                                                                                                                                                                                                                                                                                                                                                                                                                                                                                                                                                                                                                                                                                                                                                                                                                                                                                                                                                                                                                                                                                                                                                                                                                                                                                                                                                                                                                                                                                                                                                                                                                                                                                                                                                                                                                                                                                                                                                                                                                                                                                                                                                                                                                                                                                                                                                                                                                                                                                                                                                                                                                                                                                                                                                                                                                                                                                                                                                                                                                                                                                                                                                                                                                                                                                                                                                                                                                                                                                                                                                                                                                                                                                                                                                                                                                                                                                                                                                                                                                                                                                                                                                                                                                                                                                                                                                                                                                                                                                                                                                                                                                                                                                                                                                                                                                                                                                                                                                                                                                                                                                                                                                                                                                                                                                                                                                                                                                                                                                                                                                                                                                                                                                                                                                                                                                                                                                                                                                                                                                                                                                                                                                                                                                                                                                                                                                                                                                                                                                                                                                                                                                                                                                                                                                                                                                                                                                                                                                                                                                                                                                                                                                                                                                                 9/11/2009

* start ; column 11-30 can be used to have your own text on the top of each page
00001  1 1     VEH: S5 - SUPERLOAD - 19 AXLE
* code 1001
Cline Avenue - Load Rating - Double Box - 3 Webs - 48'-4" Wide
* code 1002
    2         1
* code 1003
*   5   10   15   20   25   30   35   40   45   50   55   60   65   70   75   80
*   V    V    V    V    V    V    V    V    V    V    V    V    V    V    V    V
250.0      102.0      48.33    1.0       1.0       1.3
* code 1004
    2    0    2
* code 1005
  480
* code 1005a
* location traffic lanes
7.667     19.667
* maximum and minimum truck
6.667     41.667    10.000
* code 1007, linear loads
0.7350    0.441
47.5983   0.441
* code 1201
    8    5    4    2    3
* code 1202 coordinates
 0.0000   8.2500
 7.3125   8.2500
 7.3125   0.3333
24.1667   8.2500
24.1667   0.3333
41.0208   8.2500
41.0208   0.3333
48.3333   8.2500
* code 1203 - profile 1
    5    2    3    4
0.000     0.750
1.000     0.750
3.833     1.125
6.667     1.500
7.313     1.500
* code 1203 - profile 2
    7    2    3    4
0.000     1.500
0.646     1.500
4.646     0.750
8.427     0.750
12.208    0.750
16.208    1.500
16.854    1.500
* code 1203 - profile 3
    5    2    3    4
0.000     1.500
0.646     1.500
3.479     1.125
6.313     0.750
7.313     0.750
* code 1203 - profile 4
    5    2    3    4
0.000     0.667
0.646     0.667
8.427     0.667
16.208    0.667
16.854    0.667
* code 1203 - profile 5
    5    2    3    4
0.000     1.292
0.750     1.292
4.167     1.292
7.583     1.292
7.917     1.292
* code 1204 - assembling boxgirder
    1    2    1
    2    4    2
    4    6    2
    6    8    3
    3    5    4
    5    7    4
    2    3    5
    4    5    5
    6    7    5
* code 1205 control code
```

```
    1    2   13    1    1    0    4   19     1.0       1.0
* code 1206 wheels/axle
       0.0
       1.5
       6.0
       7.5 0.833
* code 1207 definition axles
0.00      12.88
12.50     25.95
17.50     25.95
31.58     25.95
36.58     25.95
41.58     25.95
55.67     25.95
60.67     25.95
65.67     25.95
115.67    25.95
120.67    25.95
125.67    25.95
139.75    25.95
144.75    25.95
149.75    25.95
163.83    25.95
168.83    25.95
173.83    25.95
178.83    25.95
* code 1208 - accuracy
0.00001   0.00001   0.00001   .00001    .00001
* code 1209 number sections
   33
   1A   1B   1C   1R   2L   2A   2B   2C   2R   3L   3A   3B   3C   3R
   4L   4A   4B   4C   5A   5B   5C   6A   6B   6C
   7L   7A   7B   8L   8A   8B   9L   9A   9B
* code 1210 - density conrete
0.156
* code 1211 - extra forces selfweight

* code 1212 - surcharge
1.2083
* code 1213 - Prestressing Layout - NONE
```

4.4.3 Brug Output AASHTO Lanes (Summary)

1II_A_HL93_truck_EL.OUT 9/11/2009

VEH: HL93- TRUCK - S BRUG(5.75.44) page 43
date 11/09/2009; time 13:22:59
Cline Avenue - Load Rating - Double Box - 3 Webs - 48'-4" Wi

Summary of the results (Maximum)

Section	--- Deadload ----		----- P.T. ------		--- Live load ---	
	Moment	Ax.Frc	Moment	Ax.Frc	Moment	Ax.Frc
1 a	-0.18	0.02	0.00	0.00	0.27	0.00
1 b	-2.51	0.28	0.00	0.00	1.59	0.06
1 c	-6.42	0.94	0.00	0.00	0.02	0.05
1 right	-7.58	1.16	0.00	0.00	0.02	0.06
2 left	-4.40	1.39	0.00	0.00	-1.14	-0.16
2 a	-3.50	1.18	0.00	0.00	-0.06	1.24
2 b	0.09	0.38	0.00	0.00	4.03	0.13
2 c	0.96	0.24	0.00	0.00	4.76	-0.54
2 right	-5.02	1.86	0.00	0.00	0.88	0.30
3 left	-5.02	1.86	0.00	0.00	0.88	0.30
3 a	-4.07	1.61	0.00	0.00	0.82	0.26
3 b	-0.19	0.59	0.00	0.00	3.40	0.24
3 c	0.96	0.24	0.00	0.00	4.76	-0.54
3 right	-4.40	1.39	0.00	0.00	-1.14	-0.16
4 left	-7.58	1.16	0.00	0.00	0.02	0.06
4 a	-6.42	0.94	0.00	0.00	0.02	0.05
4 b	-2.51	0.28	0.00	0.00	1.59	0.06
4 c	-0.18	0.02	0.00	0.00	0.27	0.00
5 a	-0.88	0.11	0.00	0.00	1.00	-0.57
5 b	1.78	2.52	0.00	0.00	0.02	0.48
5 c	-1.83	1.84	0.00	0.00	0.66	-0.07
6 a	-1.83	1.84	0.00	0.00	0.66	-0.07
6 b	1.78	2.52	0.00	0.00	0.02	0.48
6 c	-0.88	0.11	0.00	0.00	1.00	-0.57
7 top	-3.18	-3.33	0.00	0.00	5.05	-4.12
7 a	-3.01	-2.94	0.00	0.00	3.82	-4.10
7 b	-2.23	-0.98	0.00	0.00	1.77	-1.47
8 top	0.00	-3.07	0.00	0.00	7.54	-3.07
8 a	0.00	-2.60	0.00	0.00	5.91	-4.30
8 b	0.00	-0.30	0.00	0.00	2.23	-1.63
9 top	3.18	-3.33	0.00	0.00	4.67	-8.24
9 a	3.01	-2.94	0.00	0.00	4.14	-6.88
9 b	2.23	-0.98	0.00	0.00	1.54	-2.41

1II_A_HL93_truck_EL.OUT 9/11/2009

VEH: HL93- TRUCK - S BRUG(5.75.44) page 44
date 11/09/2009; time 13:22:59
Cline Avenue - Load Rating - Double Box - 3 Webs - 48'-4" Wi

Summary of the results (Minimum)

Section	--- Deadload ----		----- P.T. ------		--- Live load ---	
	Moment	Ax.Frc	Moment	Ax.Frc	Moment	Ax.Frc
1 a	-0.18	0.02	0.00	0.00	-0.02	0.01
1 b	-2.51	0.28	0.00	0.00	0.00	0.01
1 c	-6.42	0.94	0.00	0.00	-5.89	0.54
1 right	-7.58	1.16	0.00	0.00	-7.86	0.94
2 left	-4.40	1.39	0.00	0.00	-6.77	-0.02
2 a	-3.50	1.18	0.00	0.00	-5.51	-0.26
2 b	0.09	0.38	0.00	0.00	-1.43	-0.33
2 c	0.96	0.24	0.00	0.00	-0.10	-0.04
2 right	-5.02	1.86	0.00	0.00	-8.69	0.01
3 left	-5.02	1.86	0.00	0.00	-8.69	0.01
3 a	-4.07	1.61	0.00	0.00	-7.30	-0.32
3 b	-0.19	0.59	0.00	0.00	-2.26	-0.58
3 c	0.96	0.24	0.00	0.00	-0.10	-0.04
3 right	-4.40	1.39	0.00	0.00	-6.77	-0.02
4 left	-7.58	1.16	0.00	0.00	-7.86	0.94
4 a	-6.42	0.94	0.00	0.00	-5.89	0.54
4 b	-2.51	0.28	0.00	0.00	0.00	0.01
4 c	-0.18	0.02	0.00	0.00	-0.02	0.01
5 a	-0.88	0.11	0.00	0.00	-0.55	0.21
5 b	1.78	2.52	0.00	0.00	-0.07	0.74
5 c	-1.83	1.84	0.00	0.00	-0.94	0.83
6 a	-1.83	1.84	0.00	0.00	-0.94	0.83
6 b	1.78	2.52	0.00	0.00	-0.07	0.74
6 c	-0.88	0.11	0.00	0.00	-0.55	0.21
7 top	-3.18	-3.33	0.00	0.00	-4.67	-8.24
7 a	-3.01	-2.94	0.00	0.00	-4.14	-6.88
7 b	-2.23	-0.98	0.00	0.00	-1.54	-2.41
8 top	0.00	-3.07	0.00	0.00	-7.54	-3.07
8 a	0.00	-2.60	0.00	0.00	-5.91	-4.30
8 b	0.00	-0.30	0.00	0.00	-2.23	-1.63
9 top	3.18	-3.33	0.00	0.00	-5.05	-4.12
9 a	3.01	-2.94	0.00	0.00	-3.82	-4.10
9 b	2.23	-0.98	0.00	0.00	-1.77	-1.47

VEH: HL93- TANDEM - BRUG(5.75.44) page 43
date 11/09/2009; time 13:22:58
Cline Avenue - Load Rating - Double Box - 3 Webs - 48'-4" Wi

Summary of the results (Maximum)

Section	--- Deadload ----		----- P.T. ------		--- Live load ---	
	Moment	Ax.Frc	Moment	Ax.Frc	Moment	Ax.Frc
1 a	-0.18	0.02	0.00	0.00	0.24	0.01
1 b	-2.51	0.28	0.00	0.00	1.11	0.13
1 c	-6.42	0.94	0.00	0.00	0.02	0.03
1 right	-7.58	1.16	0.00	0.00	0.02	0.04
2 left	-4.40	1.39	0.00	0.00	-0.80	-0.12
2 a	-3.50	1.18	0.00	0.00	-0.74	-0.12
2 b	0.09	0.38	0.00	0.00	3.39	0.12
2 c	0.96	0.24	0.00	0.00	4.53	-0.55
2 right	-5.02	1.86	0.00	0.00	0.55	0.20
3 left	-5.02	1.86	0.00	0.00	0.55	0.20
3 a	-4.07	1.61	0.00	0.00	0.52	0.17
3 b	-0.19	0.59	0.00	0.00	2.96	0.21
3 c	0.96	0.24	0.00	0.00	4.53	-0.55
3 right	-4.40	1.39	0.00	0.00	-0.80	-0.12
4 left	-7.58	1.16	0.00	0.00	0.02	0.04
4 a	-6.42	0.94	0.00	0.00	0.02	0.03
4 b	-2.51	0.28	0.00	0.00	1.11	0.13
4 c	-0.18	0.02	0.00	0.00	0.24	0.01
5 a	-0.88	0.11	0.00	0.00	0.77	-0.45
5 b	1.78	2.52	0.00	0.00	0.01	0.59
5 c	-1.83	1.84	0.00	0.00	0.53	-0.12
6 a	-1.83	1.84	0.00	0.00	0.53	-0.12
6 b	1.78	2.52	0.00	0.00	0.01	0.59
6 c	-0.88	0.11	0.00	0.00	0.77	-0.45
7 top	-3.18	-3.33	0.00	0.00	5.81	-4.01
7 a	-3.01	-2.94	0.00	0.00	4.81	-3.51
7 b	-2.23	-0.98	0.00	0.00	2.07	-1.47
8 top	0.00	-3.07	0.00	0.00	7.52	-4.20
8 a	0.00	-2.60	0.00	0.00	6.30	-3.71
8 b	0.00	-0.30	0.00	0.00	2.35	-1.69
9 top	3.18	-3.33	0.00	0.00	4.19	-7.17
9 a	3.01	-2.94	0.00	0.00	3.69	-6.17
9 b	2.23	-0.98	0.00	0.00	1.35	-2.53

VEH: HL93- TANDEM - BRUG(5.75.44) page 44
date 11/09/2009; time 13:22:58
Cline Avenue - Load Rating - Double Box - 3 Webs - 48'-4" Wi

Summary of the results (Minimum)

Section	--- Deadload ----		----- P.T. ------		--- Live load ---	
	Moment	Ax.Frc	Moment	Ax.Frc	Moment	Ax.Frc
1 a	-0.18	0.02	0.00	0.00	-0.04	0.01
1 b	-2.51	0.28	0.00	0.00	0.00	0.01
1 c	-6.42	0.94	0.00	0.00	-6.35	0.63
1 right	-7.58	1.16	0.00	0.00	-8.23	0.94
2 left	-4.40	1.39	0.00	0.00	-8.05	0.00
2 a	-3.50	1.18	0.00	0.00	-6.55	-0.23
2 b	0.09	0.38	0.00	0.00	-1.40	-0.36
2 c	0.96	0.24	0.00	0.00	-0.07	-0.05
2 right	-5.02	1.86	0.00	0.00	-9.49	0.06
3 left	-5.02	1.86	0.00	0.00	-9.49	0.06
3 a	-4.07	1.61	0.00	0.00	-7.87	-0.25
3 b	-0.19	0.59	0.00	0.00	-2.00	-0.55
3 c	0.96	0.24	0.00	0.00	-0.07	-0.05
3 right	-4.40	1.39	0.00	0.00	-8.05	0.00
4 left	-7.58	1.16	0.00	0.00	-8.23	0.94
4 a	-6.42	0.94	0.00	0.00	-6.35	0.63
4 b	-2.51	0.28	0.00	0.00	0.00	0.01
4 c	-0.18	0.02	0.00	0.00	-0.04	0.01
5 a	-0.88	0.11	0.00	0.00	-0.41	0.14
5 b	1.78	2.52	0.00	0.00	-0.06	0.78
5 c	-1.83	1.84	0.00	0.00	-0.70	0.74
6 a	-1.83	1.84	0.00	0.00	-0.70	0.74
6 b	1.78	2.52	0.00	0.00	-0.06	0.78
6 c	-0.88	0.11	0.00	0.00	-0.41	0.14
7 top	-3.18	-3.33	0.00	0.00	-4.19	-7.17
7 a	-3.01	-2.94	0.00	0.00	-3.69	-6.17
7 b	-2.23	-0.98	0.00	0.00	-1.35	-2.53
8 top	0.00	-3.07	0.00	0.00	-7.52	-4.20
8 a	0.00	-2.60	0.00	0.00	-6.30	-3.71
8 b	0.00	-0.30	0.00	0.00	-2.35	-1.69
9 top	3.18	-3.33	0.00	0.00	-5.81	-4.01
9 a	3.01	-2.94	0.00	0.00	-4.81	-3.51
9 b	2.23	-0.98	0.00	0.00	-2.07	-1.47

1II_A_R1_EL.OUT 9/11/2009

VEH: R1 - TOLL ROAD BRUG(5.75.44) page 43
date 11/09/2009; time 13:22:59
Cline Avenue - Load Rating - Double Box - 3 Webs - 48'-4" Wi

Summary of the results (Maximum)

Section	--- Deadload ----		----- P.T. ------		--- Live load ---	
	Moment	Ax.Frc	Moment	Ax.Frc	Moment	Ax.Frc
1 a	-0.18	0.02	0.00	0.00	0.12	0.00
1 b	-2.51	0.28	0.00	0.00	0.64	0.09
1 c	-6.42	0.94	0.00	0.00	0.02	0.06
1 right	-7.58	1.16	0.00	0.00	0.03	0.07
2 left	-4.40	1.39	0.00	0.00	-1.27	1.50
2 a	-3.50	1.18	0.00	0.00	0.47	1.26
2 b	0.09	0.38	0.00	0.00	3.37	-0.08
2 c	0.96	0.24	0.00	0.00	3.73	-0.63
2 right	-5.02	1.86	0.00	0.00	1.11	0.36
3 left	-5.02	1.86	0.00	0.00	1.11	0.36
3 a	-4.07	1.61	0.00	0.00	1.02	0.31
3 b	-0.19	0.59	0.00	0.00	2.59	0.33
3 c	0.96	0.24	0.00	0.00	3.73	-0.63
3 right	-4.40	1.39	0.00	0.00	-1.27	1.50
4 left	-7.58	1.16	0.00	0.00	0.03	0.07
4 a	-6.42	0.94	0.00	0.00	0.02	0.06
4 b	-2.51	0.28	0.00	0.00	0.64	0.09
4 c	-0.18	0.02	0.00	0.00	0.12	0.00
5 a	-0.88	0.11	0.00	0.00	1.21	-0.71
5 b	1.78	2.52	0.00	0.00	0.02	0.56
5 c	-1.83	1.84	0.00	0.00	0.79	-0.05
6 a	-1.83	1.84	0.00	0.00	0.79	-0.05
6 b	1.78	2.52	0.00	0.00	0.02	0.56
6 c	-0.88	0.11	0.00	0.00	1.21	-0.71
7 top	-3.18	-3.33	0.00	0.00	4.72	-1.38
7 a	-3.01	-2.94	0.00	0.00	4.17	-1.23
7 b	-2.23	-0.98	0.00	0.00	2.12	-1.14
8 top	0.00	-3.07	0.00	0.00	7.81	-1.56
8 a	0.00	-2.60	0.00	0.00	6.81	-1.41
8 b	0.00	-0.30	0.00	0.00	2.67	-1.29
9 top	3.18	-3.33	0.00	0.00	5.54	-4.96
9 a	3.01	-2.94	0.00	0.00	4.91	-4.27
9 b	2.23	-0.98	0.00	0.00	1.87	-1.80

1II_A_R1_EL.OUT 9/11/2009

VEH: R1 - TOLL ROAD BRUG(5.75.44) page 44
date 11/09/2009; time 13:22:59
Cline Avenue - Load Rating - Double Box - 3 Webs - 48'-4" Wi

Summary of the results (Minimum)

Section	--- Deadload ----		----- P.T. ------		--- Live load ---	
	Moment	Ax.Frc	Moment	Ax.Frc	Moment	Ax.Frc
1 a	-0.18	0.02	0.00	0.00	-0.02	0.01
1 b	-2.51	0.28	0.00	0.00	-0.19	0.09
1 c	-6.42	0.94	0.00	0.00	-5.39	0.44
1 right	-7.58	1.16	0.00	0.00	-6.82	0.64
2 left	-4.40	1.39	0.00	0.00	-5.37	-0.01
2 a	-3.50	1.18	0.00	0.00	-4.58	-0.35
2 b	0.09	0.38	0.00	0.00	-0.94	-0.21
2 c	0.96	0.24	0.00	0.00	-0.12	-0.05
2 right	-5.02	1.86	0.00	0.00	-7.75	0.08
3 left	-5.02	1.86	0.00	0.00	-7.75	0.08
3 a	-4.07	1.61	0.00	0.00	-6.75	-0.60
3 b	-0.19	0.59	0.00	0.00	-1.87	-0.59
3 c	0.96	0.24	0.00	0.00	-0.12	-0.05
3 right	-4.40	1.39	0.00	0.00	-5.37	-0.01
4 left	-7.58	1.16	0.00	0.00	-6.82	0.64
4 a	-6.42	0.94	0.00	0.00	-5.39	0.44
4 b	-2.51	0.28	0.00	0.00	-0.19	0.09
4 c	-0.18	0.02	0.00	0.00	-0.02	0.01
5 a	-0.88	0.11	0.00	0.00	-0.68	0.26
5 b	1.78	2.52	0.00	0.00	-0.09	0.88
5 c	-1.83	1.84	0.00	0.00	-1.15	1.02
6 a	-1.83	1.84	0.00	0.00	-1.15	1.02
6 b	1.78	2.52	0.00	0.00	-0.09	0.88
6 c	-0.88	0.11	0.00	0.00	-0.68	0.26
7 top	-3.18	-3.33	0.00	0.00	-5.54	-4.96
7 a	-3.01	-2.94	0.00	0.00	-4.91	-4.27
7 b	-2.23	-0.98	0.00	0.00	-1.87	-1.80
8 top	0.00	-3.07	0.00	0.00	-7.81	-1.56
8 a	0.00	-2.60	0.00	0.00	-6.81	-1.41
8 b	0.00	-0.30	0.00	0.00	-2.67	-1.29
9 top	3.18	-3.33	0.00	0.00	-4.72	-1.38
9 a	3.01	-2.94	0.00	0.00	-4.17	-1.23
9 b	2.23	-0.98	0.00	0.00	-2.12	-1.14

VEH: HL93- TANDEM - BRUG(5.75.44) page 43
date 11/09/2009; time 13:23:00
Cline Avenue - Load Rating - Double Box - 3 Webs - 48'-4" Wi

Summary of the results (Maximum)

Section	--- Deadload ----		----- P.T. ------		--- Live load ---	
	Moment	Ax.Frc	Moment	Ax.Frc	Moment	Ax.Frc
1 a	-0.18	0.02	0.00	0.00	0.17	0.00
1 b	-2.51	0.28	0.00	0.00	1.01	0.05
1 c	-6.42	0.94	0.00	0.00	0.15	0.40
1 right	-7.58	1.16	0.00	0.00	0.02	0.08
2 left	-4.40	1.39	0.00	0.00	-1.21	1.36
2 a	-3.50	1.18	0.00	0.00	0.86	1.10
2 b	0.09	0.38	0.00	0.00	3.42	0.17
2 c	0.96	0.24	0.00	0.00	3.66	-0.52
2 right	-5.02	1.86	0.00	0.00	1.06	0.36
3 left	-5.02	1.86	0.00	0.00	1.06	0.36
3 a	-4.07	1.61	0.00	0.00	1.02	1.02
3 b	-0.19	0.59	0.00	0.00	2.68	0.27
3 c	0.96	0.24	0.00	0.00	3.66	-0.52
3 right	-4.40	1.39	0.00	0.00	-1.21	1.36
4 left	-7.58	1.16	0.00	0.00	0.02	0.08
4 a	-6.42	0.94	0.00	0.00	0.15	0.40
4 b	-2.51	0.28	0.00	0.00	1.01	0.05
4 c	-0.18	0.02	0.00	0.00	0.17	0.00
5 a	-0.88	0.11	0.00	0.00	1.12	-0.65
5 b	1.78	2.52	0.00	0.00	0.02	0.41
5 c	-1.83	1.84	0.00	0.00	0.72	-0.06
6 a	-1.83	1.84	0.00	0.00	0.72	-0.06
6 b	1.78	2.52	0.00	0.00	0.02	0.41
6 c	-0.88	0.11	0.00	0.00	1.12	-0.65
7 top	-3.18	-3.33	0.00	0.00	3.85	-1.20
7 a	-3.01	-2.94	0.00	0.00	3.39	-1.06
7 b	-2.23	-0.98	0.00	0.00	1.69	-0.46
8 top	0.00	-3.07	0.00	0.00	6.79	-1.35
8 a	0.00	-2.60	0.00	0.00	5.90	-1.21
8 b	0.00	-0.30	0.00	0.00	2.26	-0.55
9 top	3.18	-3.33	0.00	0.00	4.93	-5.55
9 a	3.01	-2.94	0.00	0.00	4.32	-4.61
9 b	2.23	-0.98	0.00	0.00	1.63	-1.64

VEH: HL93- TANDEM - BRUG(5.75.44) page 44
date 11/09/2009; time 13:23:00
Cline Avenue - Load Rating - Double Box - 3 Webs - 48'-4" Wi

Summary of the results (Minimum)

Section	--- Deadload ----		----- P.T. ------		--- Live load ---	
	Moment	Ax.Frc	Moment	Ax.Frc	Moment	Ax.Frc
1 a	-0.18	0.02	0.00	0.00	-0.02	0.00
1 b	-2.51	0.28	0.00	0.00	0.00	0.02
1 c	-6.42	0.94	0.00	0.00	-4.65	0.37
1 right	-7.58	1.16	0.00	0.00	-6.06	0.64
2 left	-4.40	1.39	0.00	0.00	-4.90	-0.18
2 a	-3.50	1.18	0.00	0.00	-3.74	-0.29
2 b	0.09	0.38	0.00	0.00	-0.86	-0.17
2 c	0.96	0.24	0.00	0.00	-0.11	-0.04
2 right	-5.02	1.86	0.00	0.00	-6.67	0.07
3 left	-5.02	1.86	0.00	0.00	-6.67	0.07
3 a	-4.07	1.61	0.00	0.00	-5.73	-0.53
3 b	-0.19	0.59	0.00	0.00	-1.88	-0.58
3 c	0.96	0.24	0.00	0.00	-0.11	-0.04
3 right	-4.40	1.39	0.00	0.00	-4.90	-0.18
4 left	-7.58	1.16	0.00	0.00	-6.06	0.64
4 a	-6.42	0.94	0.00	0.00	-4.65	0.37
4 b	-2.51	0.28	0.00	0.00	0.00	0.02
4 c	-0.18	0.02	0.00	0.00	-0.02	0.00
5 a	-0.88	0.11	0.00	0.00	-0.63	0.25
5 b	1.78	2.52	0.00	0.00	-0.07	0.72
5 c	-1.83	1.84	0.00	0.00	-1.07	0.86
6 a	-1.83	1.84	0.00	0.00	-1.07	0.86
6 b	1.78	2.52	0.00	0.00	-0.07	0.72
6 c	-0.88	0.11	0.00	0.00	-0.63	0.25
7 top	-3.18	-3.33	0.00	0.00	-4.93	-5.55
7 a	-3.01	-2.94	0.00	0.00	-4.31	-4.61
7 b	-2.23	-0.98	0.00	0.00	-1.63	-1.64
8 top	0.00	-3.07	0.00	0.00	-6.79	-1.35
8 a	0.00	-2.60	0.00	0.00	-5.90	-1.21
8 b	0.00	-0.30	0.00	0.00	-2.26	-0.55
9 top	3.18	-3.33	0.00	0.00	-3.85	-1.20
9 a	3.01	-2.94	0.00	0.00	-3.39	-1.06
9 b	2.23	-0.98	0.00	0.00	-1.69	-0.46

1II_A_R3_EL.OUT 9/11/2009

VEH: R3 - TOLL ROAD BRUG(5.75.44) page 43
date 11/09/2009; time 13:23:01
Cline Avenue - Load Rating - Double Box - 3 Webs - 48'-4" Wi

Summary of the results (Maximum)

Section	--- Deadload ----		----- P.T. ------		--- Live load ---	
	Moment	Ax.Frc	Moment	Ax.Frc	Moment	Ax.Frc
1 a	-0.18	0.02	0.00	0.00	0.16	0.00
1 b	-2.51	0.28	0.00	0.00	0.80	0.06
1 c	-6.42	0.94	0.00	0.00	0.01	0.08
1 right	-7.58	1.16	0.00	0.00	0.02	0.09
2 left	-4.40	1.39	0.00	0.00	-1.22	1.35
2 a	-3.50	1.18	0.00	0.00	0.62	1.12
2 b	0.09	0.38	0.00	0.00	3.32	0.19
2 c	0.96	0.24	0.00	0.00	3.48	-0.47
2 right	-5.02	1.86	0.00	0.00	1.12	0.42
3 left	-5.02	1.86	0.00	0.00	1.12	0.42
3 a	-4.07	1.61	0.00	0.00	1.04	0.38
3 b	-0.19	0.59	0.00	0.00	2.53	0.18
3 c	0.96	0.24	0.00	0.00	3.48	-0.47
3 right	-4.40	1.39	0.00	0.00	-1.22	1.35
4 left	-7.58	1.16	0.00	0.00	0.02	0.09
4 a	-6.42	0.94	0.00	0.00	0.01	0.08
4 b	-2.51	0.28	0.00	0.00	0.80	0.06
4 c	-0.18	0.02	0.00	0.00	0.16	0.00
5 a	-0.88	0.11	0.00	0.00	1.17	-0.66
5 b	1.78	2.52	0.00	0.00	0.01	0.32
5 c	-1.83	1.84	0.00	0.00	0.76	-0.19
6 a	-1.83	1.84	0.00	0.00	0.76	-0.19
6 b	1.78	2.52	0.00	0.00	0.01	0.32
6 c	-0.88	0.11	0.00	0.00	1.17	-0.66
7 top	-3.18	-3.33	0.00	0.00	3.77	-1.41
7 a	-3.01	-2.94	0.00	0.00	3.25	-1.26
7 b	-2.23	-0.98	0.00	0.00	1.52	-0.56
8 top	0.00	-3.07	0.00	0.00	7.00	-1.55
8 a	0.00	-2.60	0.00	0.00	6.01	-1.40
8 b	0.00	-0.30	0.00	0.00	2.18	-0.66
9 top	3.18	-3.33	0.00	0.00	5.08	-5.09
9 a	3.01	-2.94	0.00	0.00	4.43	-4.38
9 b	2.23	-0.98	0.00	0.00	1.60	-1.84

1II_A_R3_EL.OUT 9/11/2009

VEH: R3 - TOLL ROAD BRUG(5.75.44) page 44
date 11/09/2009; time 13:23:01
Cline Avenue - Load Rating - Double Box - 3 Webs - 48'-4" Wi

Summary of the results (Minimum)

Section	--- Deadload ----		----- P.T. ------		--- Live load ---	
	Moment	Ax.Frc	Moment	Ax.Frc	Moment	Ax.Frc
1 a	-0.18	0.02	0.00	0.00	-0.02	0.00
1 b	-2.51	0.28	0.00	0.00	0.00	0.02
1 c	-6.42	0.94	0.00	0.00	-4.85	0.37
1 right	-7.58	1.16	0.00	0.00	-6.26	0.57
2 left	-4.40	1.39	0.00	0.00	-5.27	-0.11
2 a	-3.50	1.18	0.00	0.00	-4.01	-0.24
2 b	0.09	0.38	0.00	0.00	-0.95	-0.19
2 c	0.96	0.24	0.00	0.00	-0.12	0.00
2 right	-5.02	1.86	0.00	0.00	-7.00	0.02
3 left	-5.02	1.86	0.00	0.00	-7.00	0.02
3 a	-4.07	1.61	0.00	0.00	-6.04	-0.50
3 b	-0.19	0.59	0.00	0.00	-1.85	-0.45
3 c	0.96	0.24	0.00	0.00	-0.12	0.00
3 right	-4.40	1.39	0.00	0.00	-5.27	-0.11
4 left	-7.58	1.16	0.00	0.00	-6.26	0.57
4 a	-6.42	0.94	0.00	0.00	-4.85	0.37
4 b	-2.51	0.28	0.00	0.00	0.00	0.02
4 c	-0.18	0.02	0.00	0.00	-0.02	0.00
5 a	-0.88	0.11	0.00	0.00	-0.66	0.27
5 b	1.78	2.52	0.00	0.00	-0.06	0.68
5 c	-1.83	1.84	0.00	0.00	-1.11	0.75
6 a	-1.83	1.84	0.00	0.00	-1.11	0.75
6 b	1.78	2.52	0.00	0.00	-0.06	0.68
6 c	-0.88	0.11	0.00	0.00	-0.66	0.27
7 top	-3.18	-3.33	0.00	0.00	-5.08	-5.09
7 a	-3.01	-2.94	0.00	0.00	-4.43	-4.38
7 b	-2.23	-0.98	0.00	0.00	-1.60	-1.84
8 top	0.00	-3.07	0.00	0.00	-7.00	-1.55
8 a	0.00	-2.60	0.00	0.00	-6.01	-1.40
8 b	0.00	-0.30	0.00	0.00	-2.18	-0.66
9 top	3.18	-3.33	0.00	0.00	-3.77	-1.41
9 a	3.01	-2.94	0.00	0.00	-3.25	-1.26
9 b	2.23	-0.98	0.00	0.00	-1.52	-0.56

VEH: R4 - MICHIGAN T BRUG(5.75.44) page 43
date 11/09/2009; time 13:23:01
Cline Avenue - Load Rating - Double Box - 3 Webs - 48'-4" Wi

Summary of the results (Maximum)

Section	--- Deadload ----		----- P.T. ------		--- Live load ---	
	Moment	Ax.Frc	Moment	Ax.Frc	Moment	Ax.Frc
1 a	-0.18	0.02	0.00	0.00	0.11	0.00
1 b	-2.51	0.28	0.00	0.00	0.74	0.03
1 c	-6.42	0.94	0.00	0.00	0.33	0.25
1 right	-7.58	1.16	0.00	0.00	0.05	0.49
2 left	-4.40	1.39	0.00	0.00	0.54	1.39
2 a	-3.50	1.18	0.00	0.00	2.08	1.15
2 b	0.09	0.38	0.00	0.00	3.59	0.23
2 c	0.96	0.24	0.00	0.00	3.29	-0.55
2 right	-5.02	1.86	0.00	0.00	1.51	0.52
3 left	-5.02	1.86	0.00	0.00	1.51	0.52
3 a	-4.07	1.61	0.00	0.00	1.58	1.01
3 b	-0.19	0.59	0.00	0.00	2.56	0.30
3 c	0.96	0.24	0.00	0.00	3.29	-0.55
3 right	-4.40	1.39	0.00	0.00	0.54	1.39
4 left	-7.58	1.16	0.00	0.00	0.05	0.49
4 a	-6.42	0.94	0.00	0.00	0.33	0.25
4 b	-2.51	0.28	0.00	0.00	0.74	0.03
4 c	-0.18	0.02	0.00	0.00	0.11	0.00
5 a	-0.88	0.11	0.00	0.00	1.49	-0.85
5 b	1.78	2.52	0.00	0.00	0.02	0.34
5 c	-1.83	1.84	0.00	0.00	0.95	-0.12
6 a	-1.83	1.84	0.00	0.00	0.95	-0.12
6 b	1.78	2.52	0.00	0.00	0.02	0.34
6 c	-0.88	0.11	0.00	0.00	1.49	-0.85
7 top	-3.18	-3.33	0.00	0.00	3.85	-0.97
7 a	-3.01	-2.94	0.00	0.00	3.46	-0.86
7 b	-2.23	-0.98	0.00	0.00	1.83	-0.39
8 top	0.00	-3.07	0.00	0.00	7.93	-1.15
8 a	0.00	-2.60	0.00	0.00	6.95	-1.02
8 b	0.00	-0.30	0.00	0.00	2.66	-0.48
9 top	3.18	-3.33	0.00	0.00	6.05	-4.29
9 a	3.01	-2.94	0.00	0.00	5.32	-3.55
9 b	2.23	-0.98	0.00	0.00	2.01	-1.31

VEH: R4 - MICHIGAN T BRUG(5.75.44) page 44
date 11/09/2009; time 13:23:01
Cline Avenue - Load Rating - Double Box - 3 Webs - 48'-4" Wi

Summary of the results (Minimum)

Section	--- Deadload ----		----- P.T. ------		--- Live load ---	
	Moment	Ax.Frc	Moment	Ax.Frc	Moment	Ax.Frc
1 a	-0.18	0.02	0.00	0.00	-0.02	0.00
1 b	-2.51	0.28	0.00	0.00	0.00	0.03
1 c	-6.42	0.94	0.00	0.00	-4.26	0.25
1 right	-7.58	1.16	0.00	0.00	-5.44	0.45
2 left	-4.40	1.39	0.00	0.00	-3.94	-0.28
2 a	-3.50	1.18	0.00	0.00	-3.39	-0.31
2 b	0.09	0.38	0.00	0.00	-0.99	-0.20
2 c	0.96	0.24	0.00	0.00	-0.15	-0.02
2 right	-5.02	1.86	0.00	0.00	-6.84	-0.63
3 left	-5.02	1.86	0.00	0.00	-6.84	-0.63
3 a	-4.07	1.61	0.00	0.00	-6.07	-0.65
3 b	-0.19	0.59	0.00	0.00	-2.05	-0.57
3 c	0.96	0.24	0.00	0.00	-0.15	-0.02
3 right	-4.40	1.39	0.00	0.00	-3.94	-0.28
4 left	-7.58	1.16	0.00	0.00	-5.44	0.45
4 a	-6.42	0.94	0.00	0.00	-4.26	0.25
4 b	-2.51	0.28	0.00	0.00	0.00	0.03
4 c	-0.18	0.02	0.00	0.00	-0.02	0.00
5 a	-0.88	0.11	0.00	0.00	-0.85	0.36
5 b	1.78	2.52	0.00	0.00	-0.08	0.78
5 c	-1.83	1.84	0.00	0.00	-1.44	1.00
6 a	-1.83	1.84	0.00	0.00	-1.44	1.00
6 b	1.78	2.52	0.00	0.00	-0.08	0.78
6 c	-0.88	0.11	0.00	0.00	-0.85	0.36
7 top	-3.18	-3.33	0.00	0.00	-6.05	-4.29
7 a	-3.01	-2.94	0.00	0.00	-5.32	-3.55
7 b	-2.23	-0.98	0.00	0.00	-2.01	-1.31
8 top	0.00	-3.07	0.00	0.00	-7.93	-1.15
8 a	0.00	-2.60	0.00	0.00	-6.95	-1.02
8 b	0.00	-0.30	0.00	0.00	-2.66	-0.48
9 top	3.18	-3.33	0.00	0.00	-3.85	-0.97
9 a	3.01	-2.94	0.00	0.00	-3.46	-0.86
9 b	2.23	-0.98	0.00	0.00	-1.83	-0.39

1II_A_R5_EL.OUT 9/11/2009

VEH: R5 - MICHIGAN T BRUG(5.75.44) page 43
date 11/09/2009; time 13:23:02
Cline Avenue - Load Rating - Double Box - 3 Webs - 48'-4" Wi

Summary of the results (Maximum)

Section	--- Deadload ----		----- P.T. ------		--- Live load ---	
	Moment	Ax.Frc	Moment	Ax.Frc	Moment	Ax.Frc
1 a	-0.18	0.02	0.00	0.00	0.03	0.01
1 b	-2.51	0.28	0.00	0.00	0.10	0.10
1 c	-6.42	0.94	0.00	0.00	0.02	0.09
1 right	-7.58	1.16	0.00	0.00	0.03	0.11
2 left	-4.40	1.39	0.00	0.00	0.19	1.55
2 a	-3.50	1.18	0.00	0.00	1.16	1.39
2 b	0.09	0.38	0.00	0.00	3.42	-0.04
2 c	0.96	0.24	0.00	0.00	3.28	-0.69
2 right	-5.02	1.86	0.00	0.00	1.52	0.52
3 left	-5.02	1.86	0.00	0.00	1.52	0.52
3 a	-4.07	1.61	0.00	0.00	1.40	0.46
3 b	-0.19	0.59	0.00	0.00	2.32	0.37
3 c	0.96	0.24	0.00	0.00	3.28	-0.69
3 right	-4.40	1.39	0.00	0.00	0.19	1.55
4 left	-7.58	1.16	0.00	0.00	0.03	0.11
4 a	-6.42	0.94	0.00	0.00	0.02	0.09
4 b	-2.51	0.28	0.00	0.00	0.10	0.10
4 c	-0.18	0.02	0.00	0.00	0.03	0.01
5 a	-0.88	0.11	0.00	0.00	1.58	-0.92
5 b	1.78	2.52	0.00	0.00	0.02	0.53
5 c	-1.83	1.84	0.00	0.00	1.02	-0.11
6 a	-1.83	1.84	0.00	0.00	1.02	-0.11
6 b	1.78	2.52	0.00	0.00	0.02	0.53
6 c	-0.88	0.11	0.00	0.00	1.58	-0.92
7 top	-3.18	-3.33	0.00	0.00	5.06	-1.34
7 a	-3.01	-2.94	0.00	0.00	4.52	-1.21
7 b	-2.23	-0.98	0.00	0.00	2.29	-0.58
8 top	0.00	-3.07	0.00	0.00	9.28	-1.55
8 a	0.00	-2.60	0.00	0.00	8.12	-1.41
8 b	0.00	-0.30	0.00	0.00	3.12	-0.71
9 top	3.18	-3.33	0.00	0.00	6.88	-3.41
9 a	3.01	-2.94	0.00	0.00	6.03	-3.04
9 b	2.23	-0.98	0.00	0.00	2.27	-1.64

1II_A_R5_EL.OUT 9/11/2009

VEH: R5 - MICHIGAN T BRUG(5.75.44) page 44
date 11/09/2009; time 13:23:02
Cline Avenue - Load Rating - Double Box - 3 Webs - 48'-4" Wi

Summary of the results (Minimum)

Section	--- Deadload ----		----- P.T. ------		--- Live load ---	
	Moment	Ax.Frc	Moment	Ax.Frc	Moment	Ax.Frc
1 a	-0.18	0.02	0.00	0.00	-0.02	0.01
1 b	-2.51	0.28	0.00	0.00	-0.71	0.10
1 c	-6.42	0.94	0.00	0.00	-5.46	0.36
1 right	-7.58	1.16	0.00	0.00	-6.69	0.45
2 left	-4.40	1.39	0.00	0.00	-5.53	-0.33
2 a	-3.50	1.18	0.00	0.00	-4.79	-0.38
2 b	0.09	0.38	0.00	0.00	-1.05	-0.14
2 c	0.96	0.24	0.00	0.00	-0.16	-0.04
2 right	-5.02	1.86	0.00	0.00	-8.59	-0.69
3 left	-5.02	1.86	0.00	0.00	-8.59	-0.69
3 a	-4.07	1.61	0.00	0.00	-7.61	-0.72
3 b	-0.19	0.59	0.00	0.00	-2.25	-0.67
3 c	0.96	0.24	0.00	0.00	-0.16	-0.04
3 right	-4.40	1.39	0.00	0.00	-5.53	-0.33
4 left	-7.58	1.16	0.00	0.00	-6.69	0.45
4 a	-6.42	0.94	0.00	0.00	-5.46	0.36
4 b	-2.51	0.28	0.00	0.00	-0.71	0.10
4 c	-0.18	0.02	0.00	0.00	-0.02	0.01
5 a	-0.88	0.11	0.00	0.00	-0.90	0.36
5 b	1.78	2.52	0.00	0.00	-0.10	0.98
5 c	-1.83	1.84	0.00	0.00	-1.51	1.16
6 a	-1.83	1.84	0.00	0.00	-1.51	1.16
6 b	1.78	2.52	0.00	0.00	-0.10	0.98
6 c	-0.88	0.11	0.00	0.00	-0.90	0.36
7 top	-3.18	-3.33	0.00	0.00	-6.88	-3.41
7 a	-3.01	-2.94	0.00	0.00	-6.03	-3.04
7 b	-2.23	-0.98	0.00	0.00	-2.27	-1.64
8 top	0.00	-3.07	0.00	0.00	-9.28	-1.55
8 a	0.00	-2.60	0.00	0.00	-8.12	-1.41
8 b	0.00	-0.30	0.00	0.00	-3.12	-0.71
9 top	3.18	-3.33	0.00	0.00	-5.06	-1.34
9 a	3.01	-2.94	0.00	0.00	-4.52	-1.21
9 b	2.23	-0.98	0.00	0.00	-2.29	-0.58

1II_A_S1_EL.OUT 9/11/2009

VEH: S1 - SPECIAL TR BRUG(5.75.44) page 43
date 11/09/2009; time 13:23:02
Cline Avenue - Load Rating - Double Box - 3 Webs - 48'-4" Wi

Summary of the results (Maximum)

Section	--- Deadload ---- Moment	Ax.Frc	----- P.T. ------ Moment	Ax.Frc	--- Live load --- Moment	Ax.Frc
1 a	-0.18	0.02	0.00	0.00	0.23	0.00
1 b	-2.51	0.28	0.00	0.00	1.12	0.12
1 c	-6.42	0.94	0.00	0.00	0.02	0.04
1 right	-7.58	1.16	0.00	0.00	0.02	0.05
2 left	-4.40	1.39	0.00	0.00	-1.11	-0.16
2 a	-3.50	1.18	0.00	0.00	-0.57	1.31
2 b	0.09	0.38	0.00	0.00	3.73	0.15
2 c	0.96	0.24	0.00	0.00	4.62	-0.61
2 right	-5.02	1.86	0.00	0.00	0.82	0.28
3 left	-5.02	1.86	0.00	0.00	0.82	0.28
3 a	-4.07	1.61	0.00	0.00	0.77	0.24
3 b	-0.19	0.59	0.00	0.00	3.12	0.28
3 c	0.96	0.24	0.00	0.00	4.62	-0.61
3 right	-4.40	1.39	0.00	0.00	-1.11	-0.16
4 left	-7.58	1.16	0.00	0.00	0.02	0.05
4 a	-6.42	0.94	0.00	0.00	0.02	0.04
4 b	-2.51	0.28	0.00	0.00	1.12	0.12
4 c	-0.18	0.02	0.00	0.00	0.23	0.00
5 a	-0.88	0.11	0.00	0.00	1.01	-0.59
5 b	1.78	2.52	0.00	0.00	0.02	0.60
5 c	-1.83	1.84	0.00	0.00	0.67	-0.09
6 a	-1.83	1.84	0.00	0.00	0.67	-0.09
6 b	1.78	2.52	0.00	0.00	0.02	0.60
6 c	-0.88	0.11	0.00	0.00	1.01	-0.59
7 top	-3.18	-3.33	0.00	0.00	5.42	-4.38
7 a	-3.01	-2.94	0.00	0.00	4.48	-3.76
7 b	-2.23	-0.98	0.00	0.00	2.11	-1.53
8 top	0.00	-3.07	0.00	0.00	7.77	-4.60
8 a	0.00	-2.60	0.00	0.00	6.52	-3.98
8 b	0.00	-0.30	0.00	0.00	2.53	-1.74
9 top	3.18	-3.33	0.00	0.00	4.99	-6.99
9 a	3.01	-2.94	0.00	0.00	4.43	-5.95
9 b	2.23	-0.98	0.00	0.00	1.64	-2.41

1II_A_S1_EL.OUT 9/11/2009

VEH: S1 - SPECIAL TR BRUG(5.75.44) page 44
date 11/09/2009; time 13:23:02
Cline Avenue - Load Rating - Double Box - 3 Webs - 48'-4" Wi

Summary of the results (Minimum)

Section	--- Deadload ---- Moment	Ax.Frc	----- P.T. ------ Moment	Ax.Frc	--- Live load --- Moment	Ax.Frc
1 a	-0.18	0.02	0.00	0.00	-0.03	0.01
1 b	-2.51	0.28	0.00	0.00	0.01	0.01
1 c	-6.42	0.94	0.00	0.00	-6.34	0.59
1 right	-7.58	1.16	0.00	0.00	-8.19	0.90
2 left	-4.40	1.39	0.00	0.00	-7.59	-0.04
2 a	-3.50	1.18	0.00	0.00	-5.40	-0.32
2 b	0.09	0.38	0.00	0.00	-1.31	-0.38
2 c	0.96	0.24	0.00	0.00	-0.10	-0.06
2 right	-5.02	1.86	0.00	0.00	-9.52	0.02
3 left	-5.02	1.86	0.00	0.00	-9.52	0.02
3 a	-4.07	1.61	0.00	0.00	-7.15	-0.53
3 b	-0.19	0.59	0.00	0.00	-2.13	-0.64
3 c	0.96	0.24	0.00	0.00	-0.10	-0.06
3 right	-4.40	1.39	0.00	0.00	-7.59	-0.04
4 left	-7.58	1.16	0.00	0.00	-8.19	0.90
4 a	-6.42	0.94	0.00	0.00	-6.34	0.59
4 b	-2.51	0.28	0.00	0.00	0.01	0.01
4 c	-0.18	0.02	0.00	0.00	-0.03	0.01
5 a	-0.88	0.11	0.00	0.00	-0.55	0.21
5 b	1.78	2.52	0.00	0.00	-0.08	0.85
5 c	-1.83	1.84	0.00	0.00	-0.93	0.91
6 a	-1.83	1.84	0.00	0.00	-0.93	0.91
6 b	1.78	2.52	0.00	0.00	-0.08	0.85
6 c	-0.88	0.11	0.00	0.00	-0.55	0.21
7 top	-3.18	-3.33	0.00	0.00	-4.99	-6.99
7 a	-3.01	-2.94	0.00	0.00	-4.43	-5.95
7 b	-2.23	-0.98	0.00	0.00	-1.64	-2.41
8 top	0.00	-3.07	0.00	0.00	-7.77	-4.60
8 a	0.00	-2.60	0.00	0.00	-6.52	-3.98
8 b	0.00	-0.30	0.00	0.00	-2.53	-1.74
9 top	3.18	-3.33	0.00	0.00	-5.42	-4.38
9 a	3.01	-2.94	0.00	0.00	-4.48	-3.76
9 b	2.23	-0.98	0.00	0.00	-2.11	-1.53

1II_A_S2_EL.OUT 9/11/2009

VEH: S2 - SPECIAL TR BRUG(5.75.44) page 43
date 11/09/2009; time 13:23:03
Cline Avenue - Load Rating - Double Box - 3 Webs - 48'-4" Wi

Summary of the results (Maximum)

Section	--- Deadload ----		----- P.T. ------		--- Live load ---	
	Moment	Ax.Frc	Moment	Ax.Frc	Moment	Ax.Frc
1 a	-0.18	0.02	0.00	0.00	0.19	0.01
1 b	-2.51	0.28	0.00	0.00	0.93	0.13
1 c	-6.42	0.94	0.00	0.00	0.02	0.03
1 right	-7.58	1.16	0.00	0.00	0.02	0.04
2 left	-4.40	1.39	0.00	0.00	-0.94	-0.14
2 a	-3.50	1.18	0.00	0.00	-0.64	1.21
2 b	0.09	0.38	0.00	0.00	3.30	0.15
2 c	0.96	0.24	0.00	0.00	4.25	-0.59
2 right	-5.02	1.86	0.00	0.00	0.68	0.23
3 left	-5.02	1.86	0.00	0.00	0.68	0.23
3 a	-4.07	1.61	0.00	0.00	0.64	0.20
3 b	-0.19	0.59	0.00	0.00	2.78	0.26
3 c	0.96	0.24	0.00	0.00	4.25	-0.59
3 right	-4.40	1.39	0.00	0.00	-0.94	-0.14
4 left	-7.58	1.16	0.00	0.00	0.02	0.04
4 a	-6.42	0.94	0.00	0.00	0.02	0.03
4 b	-2.51	0.28	0.00	0.00	0.93	0.13
4 c	-0.18	0.02	0.00	0.00	0.19	0.01
5 a	-0.88	0.11	0.00	0.00	0.87	-0.52
5 b	1.78	2.52	0.00	0.00	0.01	0.61
5 c	-1.83	1.84	0.00	0.00	0.59	-0.09
6 a	-1.83	1.84	0.00	0.00	0.59	-0.09
6 b	1.78	2.52	0.00	0.00	0.01	0.61
6 c	-0.88	0.11	0.00	0.00	0.87	-0.52
7 top	-3.18	-3.33	0.00	0.00	5.23	-3.77
7 a	-3.01	-2.94	0.00	0.00	4.41	-3.22
7 b	-2.23	-0.98	0.00	0.00	2.11	-1.31
8 top	0.00	-3.07	0.00	0.00	7.26	-3.99
8 a	0.00	-2.60	0.00	0.00	6.12	-3.44
8 b	0.00	-0.30	0.00	0.00	2.45	-1.51
9 top	3.18	-3.33	0.00	0.00	4.47	-6.01
9 a	3.01	-2.94	0.00	0.00	3.98	-5.08
9 b	2.23	-0.98	0.00	0.00	1.51	-2.04

1II_A_S2_EL.OUT 9/11/2009

VEH: S2 - SPECIAL TR BRUG(5.75.44) page 44
date 11/09/2009; time 13:23:03
Cline Avenue - Load Rating - Double Box - 3 Webs - 48'-4" Wi

Summary of the results (Minimum)

Section	--- Deadload ----		----- P.T. ------		--- Live load ---	
	Moment	Ax.Frc	Moment	Ax.Frc	Moment	Ax.Frc
1 a	-0.18	0.02	0.00	0.00	-0.04	0.01
1 b	-2.51	0.28	0.00	0.00	0.00	0.01
1 c	-6.42	0.94	0.00	0.00	-5.82	0.57
1 right	-7.58	1.16	0.00	0.00	-7.42	0.85
2 left	-4.40	1.39	0.00	0.00	-7.09	-0.06
2 a	-3.50	1.18	0.00	0.00	-5.14	-0.31
2 b	0.09	0.38	0.00	0.00	-0.95	-0.21
2 c	0.96	0.24	0.00	0.00	-0.08	-0.05
2 right	-5.02	1.86	0.00	0.00	-8.80	0.02
3 left	-5.02	1.86	0.00	0.00	-8.80	0.02
3 a	-4.07	1.61	0.00	0.00	-6.66	-0.47
3 b	-0.19	0.59	0.00	0.00	-1.80	-0.60
3 c	0.96	0.24	0.00	0.00	-0.08	-0.05
3 right	-4.40	1.39	0.00	0.00	-7.09	-0.06
4 left	-7.58	1.16	0.00	0.00	-7.42	0.85
4 a	-6.42	0.94	0.00	0.00	-5.82	0.57
4 b	-2.51	0.28	0.00	0.00	0.00	0.01
4 c	-0.18	0.02	0.00	0.00	-0.04	0.01
5 a	-0.88	0.11	0.00	0.00	-0.47	0.17
5 b	1.78	2.52	0.00	0.00	-0.07	0.84
5 c	-1.83	1.84	0.00	0.00	-0.81	0.84
6 a	-1.83	1.84	0.00	0.00	-0.81	0.84
6 b	1.78	2.52	0.00	0.00	-0.07	0.84
6 c	-0.88	0.11	0.00	0.00	-0.47	0.17
7 top	-3.18	-3.33	0.00	0.00	-4.47	-6.01
7 a	-3.01	-2.94	0.00	0.00	-3.98	-5.08
7 b	-2.23	-0.98	0.00	0.00	-1.51	-2.04
8 top	0.00	-3.07	0.00	0.00	-7.26	-3.99
8 a	0.00	-2.60	0.00	0.00	-6.12	-3.44
8 b	0.00	-0.30	0.00	0.00	-2.45	-1.51
9 top	3.18	-3.33	0.00	0.00	-5.23	-3.77
9 a	3.01	-2.94	0.00	0.00	-4.41	-3.22
9 b	2.23	-0.98	0.00	0.00	-2.11	-1.31

1II_A_S3_EL.OUT 9/11/2009

VEH: S3 - SPECIAL TR BRUG(5.75.44) page 43
date 11/09/2009; time 13:23:03
Cline Avenue - Load Rating - Double Box - 3 Webs - 48'-4" Wi

Summary of the results (Maximum)

Section	--- Deadload ----		----- P.T. ------		--- Live load ---	
	Moment	Ax.Frc	Moment	Ax.Frc	Moment	Ax.Frc
1 a	-0.18	0.02	0.00	0.00	0.03	-0.01
1 b	-2.51	0.28	0.00	0.00	0.53	-0.11
1 c	-6.42	0.94	0.00	0.00	4.10	-0.34
1 right	-7.58	1.16	0.00	0.00	4.95	-0.42
2 left	-4.40	1.39	0.00	0.00	4.42	0.24
2 a	-3.50	1.18	0.00	0.00	3.87	0.27
2 b	0.09	0.38	0.00	0.00	0.72	0.15
2 c	0.96	0.24	0.00	0.00	0.10	0.01
2 right	-5.02	1.86	0.00	0.00	6.42	0.45
3 left	-5.02	1.86	0.00	0.00	6.42	0.45
3 a	-4.07	1.61	0.00	0.00	5.69	0.47
3 b	-0.19	0.59	0.00	0.00	1.49	0.45
3 c	0.96	0.24	0.00	0.00	0.10	0.01
3 right	-4.40	1.39	0.00	0.00	4.42	0.24
4 left	-7.58	1.16	0.00	0.00	4.95	-0.42
4 a	-6.42	0.94	0.00	0.00	4.10	-0.34
4 b	-2.51	0.28	0.00	0.00	0.53	-0.11
4 c	-0.18	0.02	0.00	0.00	0.03	-0.01
5 a	-0.88	0.11	0.00	0.00	0.58	-0.23
5 b	1.78	2.52	0.00	0.00	0.07	-0.78
5 c	-1.83	1.84	0.00	0.00	0.99	-0.77
6 a	-1.83	1.84	0.00	0.00	0.99	-0.77
6 b	1.78	2.52	0.00	0.00	0.07	-0.78
6 c	-0.88	0.11	0.00	0.00	0.58	-0.23
7 top	-3.18	-3.33	0.00	0.00	4.66	2.37
7 a	-3.01	-2.94	0.00	0.00	4.14	2.08
7 b	-2.23	-0.98	0.00	0.00	1.58	1.07
8 top	0.00	-3.07	0.00	0.00	6.63	1.12
8 a	0.00	-2.60	0.00	0.00	5.82	1.02
8 b	0.00	-0.30	0.00	0.00	2.31	0.87
9 top	3.18	-3.33	0.00	0.00	3.89	0.95
9 a	3.01	-2.94	0.00	0.00	3.48	0.87
9 b	2.23	-0.98	0.00	0.00	1.79	0.73

1II_A_S3_EL.OUT 9/11/2009

VEH: S3 - SPECIAL TR BRUG(5.75.44) page 44
date 11/09/2009; time 13:23:03
Cline Avenue - Load Rating - Double Box - 3 Webs - 48'-4" Wi

Summary of the results (Minimum)

Section	--- Deadload ----		----- P.T. ------		--- Live load ---	
	Moment	Ax.Frc	Moment	Ax.Frc	Moment	Ax.Frc
1 a	-0.18	0.02	0.00	0.00	-0.03	-0.01
1 b	-2.51	0.28	0.00	0.00	-0.06	-0.11
1 c	-6.42	0.94	0.00	0.00	-0.01	-0.06
1 right	-7.58	1.16	0.00	0.00	-0.02	-0.08
2 left	-4.40	1.39	0.00	0.00	0.27	-1.14
2 a	-3.50	1.18	0.00	0.00	-0.49	-1.02
2 b	0.09	0.38	0.00	0.00	-2.44	0.01
2 c	0.96	0.24	0.00	0.00	-2.58	0.51
2 right	-5.02	1.86	0.00	0.00	-0.96	-0.35
3 left	-5.02	1.86	0.00	0.00	-0.96	-0.35
3 a	-4.07	1.61	0.00	0.00	-0.89	-0.31
3 b	-0.19	0.59	0.00	0.00	-1.69	-0.21
3 c	0.96	0.24	0.00	0.00	-2.58	0.51
3 right	-4.40	1.39	0.00	0.00	0.27	-1.14
4 left	-7.58	1.16	0.00	0.00	-0.02	-0.08
4 a	-6.42	0.94	0.00	0.00	-0.01	-0.06
4 b	-2.51	0.28	0.00	0.00	-0.06	-0.11
4 c	-0.18	0.02	0.00	0.00	-0.03	-0.01
5 a	-0.88	0.11	0.00	0.00	-1.04	0.62
5 b	1.78	2.52	0.00	0.00	-0.01	-0.45
5 c	-1.83	1.84	0.00	0.00	-0.69	0.13
6 a	-1.83	1.84	0.00	0.00	-0.69	0.13
6 b	1.78	2.52	0.00	0.00	-0.01	-0.45
6 c	-0.88	0.11	0.00	0.00	-1.04	0.62
7 top	-3.18	-3.33	0.00	0.00	-3.89	0.95
7 a	-3.01	-2.94	0.00	0.00	-3.48	0.87
7 b	-2.23	-0.98	0.00	0.00	-1.79	0.73
8 top	0.00	-3.07	0.00	0.00	-6.63	1.12
8 a	0.00	-2.60	0.00	0.00	-5.82	1.02
8 b	0.00	-0.30	0.00	0.00	-2.31	0.87
9 top	3.18	-3.33	0.00	0.00	-4.66	2.37
9 a	3.01	-2.94	0.00	0.00	-4.14	2.08
9 b	2.23	-0.98	0.00	0.00	-1.58	1.07

1II_A_S4_EL.OUT 9/11/2009

VEH: S4 - SUPER LOAD BRUG(5.75.44) page 43
date 11/09/2009; time 13:23:04
Cline Avenue - Load Rating - Double Box - 3 Webs - 48'-4" Wi

Summary of the results (Maximum)

Section	--- Deadload ----		----- P.T. ------		--- Live load ---	
	Moment	Ax.Frc	Moment	Ax.Frc	Moment	Ax.Frc
1 a	-0.18	0.02	0.00	0.00	0.07	0.00
1 b	-2.51	0.28	0.00	0.00	0.65	-0.05
1 c	-6.42	0.94	0.00	0.00	1.43	-0.06
1 right	-7.58	1.16	0.00	0.00	1.56	0.01
2 left	-4.40	1.39	0.00	0.00	1.67	0.12
2 a	-3.50	1.18	0.00	0.00	1.44	0.13
2 b	0.09	0.38	0.00	0.00	0.33	0.05
2 c	0.96	0.24	0.00	0.00	0.05	0.01
2 right	-5.02	1.86	0.00	0.00	2.74	0.24
3 left	-5.02	1.86	0.00	0.00	2.74	0.24
3 a	-4.07	1.61	0.00	0.00	2.42	0.25
3 b	-0.19	0.59	0.00	0.00	0.72	0.17
3 c	0.96	0.24	0.00	0.00	0.05	0.01
3 right	-4.40	1.39	0.00	0.00	1.67	0.12
4 left	-7.58	1.16	0.00	0.00	1.56	0.01
4 a	-6.42	0.94	0.00	0.00	1.43	-0.06
4 b	-2.51	0.28	0.00	0.00	0.65	-0.05
4 c	-0.18	0.02	0.00	0.00	0.07	0.00
5 a	-0.88	0.11	0.00	0.00	0.31	-0.13
5 b	1.78	2.52	0.00	0.00	0.03	-0.34
5 c	-1.83	1.84	0.00	0.00	0.52	-0.41
6 a	-1.83	1.84	0.00	0.00	0.52	-0.41
6 b	1.78	2.52	0.00	0.00	0.03	-0.34
6 c	-0.88	0.11	0.00	0.00	0.31	-0.13
7 top	-3.18	-3.33	0.00	0.00	2.40	-0.50
7 a	-3.01	-2.94	0.00	0.00	2.08	-0.24
7 b	-2.23	-0.98	0.00	0.00	0.79	0.25
8 top	0.00	-3.07	0.00	0.00	3.10	0.35
8 a	0.00	-2.60	0.00	0.00	2.75	0.33
8 b	0.00	-0.30	0.00	0.00	1.09	0.20
9 top	3.18	-3.33	0.00	0.00	1.64	0.28
9 a	3.01	-2.94	0.00	0.00	1.51	0.26
9 b	2.23	-0.98	0.00	0.00	0.80	0.16

1II_A_S4_EL.OUT 9/11/2009

VEH: S4 - SUPER LOAD BRUG(5.75.44) page 44
date 11/09/2009; time 13:23:04
Cline Avenue - Load Rating - Double Box - 3 Webs - 48'-4" Wi

Summary of the results (Minimum)

Section	--- Deadload ----		----- P.T. ------		--- Live load ---	
	Moment	Ax.Frc	Moment	Ax.Frc	Moment	Ax.Frc
1 a	-0.18	0.02	0.00	0.00	-0.01	0.00
1 b	-2.51	0.28	0.00	0.00	0.00	-0.01
1 c	-6.42	0.94	0.00	0.00	-0.06	-0.02
1 right	-7.58	1.16	0.00	0.00	-0.15	0.07
2 left	-4.40	1.39	0.00	0.00	-0.84	-0.39
2 a	-3.50	1.18	0.00	0.00	-0.43	-0.43
2 b	0.09	0.38	0.00	0.00	-0.71	0.03
2 c	0.96	0.24	0.00	0.00	-0.57	0.23
2 right	-5.02	1.86	0.00	0.00	-0.66	-0.28
3 left	-5.02	1.86	0.00	0.00	-0.66	-0.28
3 a	-4.07	1.61	0.00	0.00	-0.49	-0.16
3 b	-0.19	0.59	0.00	0.00	-0.27	-0.06
3 c	0.96	0.24	0.00	0.00	-0.57	0.23
3 right	-4.40	1.39	0.00	0.00	-0.84	-0.39
4 left	-7.58	1.16	0.00	0.00	-0.15	0.07
4 a	-6.42	0.94	0.00	0.00	-0.06	-0.02
4 b	-2.51	0.28	0.00	0.00	0.00	-0.01
4 c	-0.18	0.02	0.00	0.00	-0.01	0.00
5 a	-0.88	0.11	0.00	0.00	-0.55	0.32
5 b	1.78	2.52	0.00	0.00	-0.01	-0.19
5 c	-1.83	1.84	0.00	0.00	-0.35	0.05
6 a	-1.83	1.84	0.00	0.00	-0.35	0.05
6 b	1.78	2.52	0.00	0.00	-0.01	-0.19
6 c	-0.88	0.11	0.00	0.00	-0.55	0.32
7 top	-3.18	-3.33	0.00	0.00	-1.64	0.28
7 a	-3.01	-2.94	0.00	0.00	-1.51	0.26
7 b	-2.23	-0.98	0.00	0.00	-0.80	0.16
8 top	0.00	-3.07	0.00	0.00	-3.10	0.35
8 a	0.00	-2.60	0.00	0.00	-2.75	0.33
8 b	0.00	-0.30	0.00	0.00	-1.09	0.20
9 top	3.18	-3.33	0.00	0.00	-2.40	-0.50
9 a	3.01	-2.94	0.00	0.00	-2.08	-0.24
9 b	2.23	-0.98	0.00	0.00	-0.79	0.25

1II_A_S5_EL.OUT 9/11/2009

VEH: S5 - SUPERLOAD BRUG(5.75.44) page 43
date 11/09/2009; time 13:23:05
Cline Avenue - Load Rating - Double Box - 3 Webs - 48'-4" Wi

Summary of the results (Maximum)

Section	--- Deadload ----		----- P.T. ------		--- Live load ---	
	Moment	Ax.Frc	Moment	Ax.Frc	Moment	Ax.Frc
1 a	-0.18	0.02	0.00	0.00	0.24	0.01
1 b	-2.51	0.28	0.00	0.00	1.16	0.14
1 c	-6.42	0.94	0.00	0.00	0.02	0.03
1 right	-7.58	1.16	0.00	0.00	0.02	0.04
2 left	-4.40	1.39	0.00	0.00	-0.90	-0.13
2 a	-3.50	1.18	0.00	0.00	-0.84	-0.13
2 b	0.09	0.38	0.00	0.00	3.61	0.14
2 c	0.96	0.24	0.00	0.00	4.76	-0.59
2 right	-5.02	1.86	0.00	0.00	0.63	0.23
3 left	-5.02	1.86	0.00	0.00	0.63	0.23
3 a	-4.07	1.61	0.00	0.00	0.60	0.19
3 b	-0.19	0.59	0.00	0.00	3.12	0.23
3 c	0.96	0.24	0.00	0.00	4.76	-0.59
3 right	-4.40	1.39	0.00	0.00	-0.90	-0.13
4 left	-7.58	1.16	0.00	0.00	0.02	0.04
4 a	-6.42	0.94	0.00	0.00	0.02	0.03
4 b	-2.51	0.28	0.00	0.00	1.16	0.14
4 c	-0.18	0.02	0.00	0.00	0.24	0.01
5 a	-0.88	0.11	0.00	0.00	0.85	-0.51
5 b	1.78	2.52	0.00	0.00	0.01	0.63
5 c	-1.83	1.84	0.00	0.00	0.59	-0.13
6 a	-1.83	1.84	0.00	0.00	0.59	-0.13
6 b	1.78	2.52	0.00	0.00	0.01	0.62
6 c	-0.88	0.11	0.00	0.00	0.85	-0.51
7 top	-3.18	-3.33	0.00	0.00	6.01	-3.95
7 a	-3.01	-2.94	0.00	0.00	5.03	-3.43
7 b	-2.23	-0.98	0.00	0.00	2.25	-1.42
8 top	0.00	-3.07	0.00	0.00	8.00	-4.17
8 a	0.00	-2.60	0.00	0.00	6.43	-4.12
8 b	0.00	-0.30	0.00	0.00	2.47	-1.78
9 top	3.18	-3.33	0.00	0.00	4.51	-7.26
9 a	3.01	-2.94	0.00	0.00	3.98	-6.16
9 b	2.23	-0.98	0.00	0.00	1.49	-2.42

1II_A_S5_EL.OUT 9/11/2009

VEH: S5 - SUPERLOAD BRUG(5.75.44) page 44
date 11/09/2009; time 13:23:05
Cline Avenue - Load Rating - Double Box - 3 Webs - 48'-4" Wi

Summary of the results (Minimum)

Section	--- Deadload ----		----- P.T. ------		--- Live load ---	
	Moment	Ax.Frc	Moment	Ax.Frc	Moment	Ax.Frc
1 a	-0.18	0.02	0.00	0.00	-0.04	0.01
1 b	-2.51	0.28	0.00	0.00	0.00	0.01
1 c	-6.42	0.94	0.00	0.00	-6.49	0.65
1 right	-7.58	1.16	0.00	0.00	-8.36	0.98
2 left	-4.40	1.39	0.00	0.00	-8.13	-0.01
2 a	-3.50	1.18	0.00	0.00	-6.66	-0.25
2 b	0.09	0.38	0.00	0.00	-1.35	-0.38
2 c	0.96	0.24	0.00	0.00	-0.08	-0.05
2 right	-5.02	1.86	0.00	0.00	-9.75	0.05
3 left	-5.02	1.86	0.00	0.00	-9.75	0.05
3 a	-4.07	1.61	0.00	0.00	-7.13	-0.46
3 b	-0.19	0.59	0.00	0.00	-2.03	-0.60
3 c	0.96	0.24	0.00	0.00	-0.08	-0.05
3 right	-4.40	1.39	0.00	0.00	-8.13	-0.01
4 left	-7.58	1.16	0.00	0.00	-8.36	0.98
4 a	-6.42	0.94	0.00	0.00	-6.49	0.65
4 b	-2.51	0.28	0.00	0.00	0.00	0.01
4 c	-0.18	0.02	0.00	0.00	-0.04	0.01
5 a	-0.88	0.11	0.00	0.00	-0.46	0.16
5 b	1.78	2.52	0.00	0.00	-0.07	0.85
5 c	-1.83	1.84	0.00	0.00	-0.78	0.81
6 a	-1.83	1.84	0.00	0.00	-0.78	0.81
6 b	1.78	2.52	0.00	0.00	-0.07	0.85
6 c	-0.88	0.11	0.00	0.00	-0.46	0.16
7 top	-3.18	-3.33	0.00	0.00	-4.51	-7.26
7 a	-3.01	-2.94	0.00	0.00	-3.98	-6.16
7 b	-2.23	-0.98	0.00	0.00	-1.49	-2.42
8 top	0.00	-3.07	0.00	0.00	-8.00	-4.17
8 a	0.00	-2.60	0.00	0.00	-6.43	-4.12
8 b	0.00	-0.30	0.00	0.00	-2.47	-1.78
9 top	3.18	-3.33	0.00	0.00	-6.01	-3.95
9 a	3.01	-2.94	0.00	0.00	-5.03	-3.43
9 b	2.23	-0.98	0.00	0.00	-2.25	-1.42

II_A_HL93_truck_EL.OUT 9/11/2009

VEH: HL93- TRUCK BRUG(5.75.44) page 43
date 11/09/2009; time 13:23:06
Cline Avenue - Load Rating - Double Box - 3 Webs - 48'-4" Wi

Summary of the results (Maximum)

Section	--- Deadload ----		----- P.T. ------		--- Live load ---	
	Moment	Ax.Frc	Moment	Ax.Frc	Moment	Ax.Frc
1 a	-0.18	0.02	0.00	0.00	0.28	0.00
1 b	-2.51	0.28	0.00	0.00	1.60	0.08
1 c	-6.42	0.94	0.00	0.00	0.05	0.11
1 right	-7.58	1.16	0.00	0.00	0.07	0.14
2 left	-4.40	1.39	0.00	0.00	-1.14	-0.16
2 a	-3.50	1.18	0.00	0.00	-0.06	1.24
2 b	0.09	0.38	0.00	0.00	4.03	0.13
2 c	0.96	0.24	0.00	0.00	5.89	-0.55
2 right	-5.02	1.86	0.00	0.00	0.88	0.30
3 left	-5.02	1.86	0.00	0.00	0.88	0.30
3 a	-4.07	1.61	0.00	0.00	1.13	1.54
3 b	-0.19	0.59	0.00	0.00	3.68	0.29
3 c	0.96	0.24	0.00	0.00	5.89	-0.55
3 right	-4.40	1.39	0.00	0.00	-1.14	-0.16
4 left	-7.58	1.16	0.00	0.00	0.07	0.14
4 a	-6.42	0.94	0.00	0.00	0.05	0.11
4 b	-2.51	0.28	0.00	0.00	1.59	0.06
4 c	-0.18	0.02	0.00	0.00	0.27	0.00
5 a	-0.88	0.11	0.00	0.00	1.12	0.00
5 b	1.78	2.52	0.00	0.00	0.05	0.54
5 c	-1.83	1.84	0.00	0.00	1.15	-0.40
6 a	-1.83	1.84	0.00	0.00	1.15	-0.40
6 b	1.78	2.52	0.00	0.00	0.05	0.54
6 c	-0.88	0.11	0.00	0.00	1.12	0.00
7 top	-3.18	-3.33	0.00	0.00	6.71	-4.42
7 a	-3.01	-2.94	0.00	0.00	5.46	-4.42
7 b	-2.23	-0.98	0.00	0.00	2.43	-1.58
8 top	0.00	-3.07	0.00	0.00	11.51	-4.65
8 a	0.00	-2.60	0.00	0.00	9.63	-4.66
8 b	0.00	-0.30	0.00	0.00	3.39	-1.77
9 top	3.18	-3.33	0.00	0.00	4.67	-8.24
9 a	3.01	-2.94	0.00	0.00	4.14	-6.88
9 b	2.23	-0.98	0.00	0.00	1.54	-2.41

II_A_HL93_truck_EL.OUT 9/11/2009

VEH: HL93- TRUCK BRUG(5.75.44) page 44
date 11/09/2009; time 13:23:06
Cline Avenue - Load Rating - Double Box - 3 Webs - 48'-4" Wi

Summary of the results (Minimum)

Section	--- Deadload ----		----- P.T. ------		--- Live load ---	
	Moment	Ax.Frc	Moment	Ax.Frc	Moment	Ax.Frc
1 a	-0.18	0.02	0.00	0.00	-0.02	0.01
1 b	-2.51	0.28	0.00	0.00	-0.20	0.14
1 c	-6.42	0.94	0.00	0.00	-6.73	0.88
1 right	-7.58	1.16	0.00	0.00	-9.13	1.40
2 left	-4.40	1.39	0.00	0.00	-9.20	1.45
2 a	-3.50	1.18	0.00	0.00	-6.68	-0.35
2 b	0.09	0.38	0.00	0.00	-2.03	-0.48
2 c	0.96	0.24	0.00	0.00	-0.34	0.12
2 right	-5.02	1.86	0.00	0.00	-12.19	0.85
3 left	-5.02	1.86	0.00	0.00	-12.19	0.85
3 a	-4.07	1.61	0.00	0.00	-9.63	-0.54
3 b	-0.19	0.59	0.00	0.00	-2.26	-0.58
3 c	0.96	0.24	0.00	0.00	-0.34	0.12
3 right	-4.40	1.39	0.00	0.00	-9.20	1.45
4 left	-7.58	1.16	0.00	0.00	-9.13	1.40
4 a	-6.42	0.94	0.00	0.00	-6.73	0.88
4 b	-2.51	0.28	0.00	0.00	-0.20	0.14
4 c	-0.18	0.02	0.00	0.00	-0.02	0.01
5 a	-0.88	0.11	0.00	0.00	-1.00	0.42
5 b	1.78	2.52	0.00	0.00	-0.10	1.32
5 c	-1.83	1.84	0.00	0.00	-1.25	1.41
6 a	-1.83	1.84	0.00	0.00	-1.25	1.41
6 b	1.78	2.52	0.00	0.00	-0.10	1.32
6 c	-0.88	0.11	0.00	0.00	-1.00	0.42
7 top	-3.18	-3.33	0.00	0.00	-4.67	-8.24
7 a	-3.01	-2.94	0.00	0.00	-4.14	-6.88
7 b	-2.23	-0.98	0.00	0.00	-1.54	-2.41
8 top	0.00	-3.07	0.00	0.00	-11.51	-4.65
8 a	0.00	-2.60	0.00	0.00	-9.63	-4.66
8 b	0.00	-0.30	0.00	0.00	-3.39	-1.77
9 top	3.18	-3.33	0.00	0.00	-6.71	-4.42
9 a	3.01	-2.94	0.00	0.00	-5.46	-4.42
9 b	2.23	-0.98	0.00	0.00	-2.43	-1.58

II_A_HL93_tandem_EL.OUT 9/11/2009

VEH: HL93- TANDEM BRUG(5.75.44) page 43
date 11/09/2009; time 13:23:05
Cline Avenue - Load Rating - Double Box - 3 Webs - 48'-4" Wi

Summary of the results (Maximum)

Section	--- Deadload ----		----- P.T. ------		--- Live load ---	
	Moment	Ax.Frc	Moment	Ax.Frc	Moment	Ax.Frc
1 a	-0.18	0.02	0.00	0.00	0.24	0.01
1 b	-2.51	0.28	0.00	0.00	1.13	0.14
1 c	-6.42	0.94	0.00	0.00	0.09	0.06
1 right	-7.58	1.16	0.00	0.00	0.12	0.08
2 left	-4.40	1.39	0.00	0.00	-0.80	-0.12
2 a	-3.50	1.18	0.00	0.00	-0.74	-0.12
2 b	0.09	0.38	0.00	0.00	3.39	0.12
2 c	0.96	0.24	0.00	0.00	5.65	-0.60
2 right	-5.02	1.86	0.00	0.00	0.55	0.20
3 left	-5.02	1.86	0.00	0.00	0.55	0.20
3 a	-4.07	1.61	0.00	0.00	0.52	0.17
3 b	-0.19	0.59	0.00	0.00	3.20	0.24
3 c	0.96	0.24	0.00	0.00	5.65	-0.60
3 right	-4.40	1.39	0.00	0.00	-0.80	-0.12
4 left	-7.58	1.16	0.00	0.00	0.12	0.08
4 a	-6.42	0.94	0.00	0.00	0.09	0.06
4 b	-2.51	0.28	0.00	0.00	1.11	0.13
4 c	-0.18	0.02	0.00	0.00	0.24	0.01
5 a	-0.88	0.11	0.00	0.00	0.81	0.23
5 b	1.78	2.52	0.00	0.00	0.04	0.59
5 c	-1.83	1.84	0.00	0.00	0.92	-0.50
6 a	-1.83	1.84	0.00	0.00	0.92	-0.50
6 b	1.78	2.52	0.00	0.00	0.04	0.59
6 c	-0.88	0.11	0.00	0.00	0.81	0.23
7 top	-3.18	-3.33	0.00	0.00	7.25	-4.32
7 a	-3.01	-2.94	0.00	0.00	6.05	-3.79
7 b	-2.23	-0.98	0.00	0.00	2.54	-1.57
8 top	0.00	-3.07	0.00	0.00	10.62	-4.54
8 a	0.00	-2.60	0.00	0.00	8.95	-4.01
8 b	0.00	-0.30	0.00	0.00	3.15	-1.81
9 top	3.18	-3.33	0.00	0.00	4.19	-7.17
9 a	3.01	-2.94	0.00	0.00	3.69	-6.17
9 b	2.23	-0.98	0.00	0.00	1.35	-2.53

II_A_HL93_tandem_EL.OUT 9/11/2009

VEH: HL93- TANDEM BRUG(5.75.44) page 44
date 11/09/2009; time 13:23:05
Cline Avenue - Load Rating - Double Box - 3 Webs - 48'-4" Wi

Summary of the results (Minimum)

Section	--- Deadload ----		----- P.T. ------		--- Live load ---	
	Moment	Ax.Frc	Moment	Ax.Frc	Moment	Ax.Frc
1 a	-0.18	0.02	0.00	0.00	-0.04	0.01
1 b	-2.51	0.28	0.00	0.00	-0.37	0.20
1 c	-6.42	0.94	0.00	0.00	-7.65	1.04
1 right	-7.58	1.16	0.00	0.00	-10.03	1.47
2 left	-4.40	1.39	0.00	0.00	-11.10	1.37
2 a	-3.50	1.18	0.00	0.00	-8.47	0.62
2 b	0.09	0.38	0.00	0.00	-1.79	-0.45
2 c	0.96	0.24	0.00	0.00	-0.30	0.12
2 right	-5.02	1.86	0.00	0.00	-13.20	0.82
3 left	-5.02	1.86	0.00	0.00	-13.20	0.82
3 a	-4.07	1.61	0.00	0.00	-10.59	0.45
3 b	-0.19	0.59	0.00	0.00	-2.00	-0.55
3 c	0.96	0.24	0.00	0.00	-0.30	0.12
3 right	-4.40	1.39	0.00	0.00	-11.10	1.37
4 left	-7.58	1.16	0.00	0.00	-10.03	1.47
4 a	-6.42	0.94	0.00	0.00	-7.65	1.04
4 b	-2.51	0.28	0.00	0.00	-0.37	0.20
4 c	-0.18	0.02	0.00	0.00	-0.04	0.01
5 a	-0.88	0.11	0.00	0.00	-0.74	0.29
5 b	1.78	2.52	0.00	0.00	-0.09	1.41
5 c	-1.83	1.84	0.00	0.00	-0.97	1.23
6 a	-1.83	1.84	0.00	0.00	-0.97	1.23
6 b	1.78	2.52	0.00	0.00	-0.09	1.41
6 c	-0.88	0.11	0.00	0.00	-0.74	0.29
7 top	-3.18	-3.33	0.00	0.00	-4.19	-7.17
7 a	-3.01	-2.94	0.00	0.00	-3.69	-6.17
7 b	-2.23	-0.98	0.00	0.00	-1.35	-2.53
8 top	0.00	-3.07	0.00	0.00	-10.62	-4.54
8 a	0.00	-2.60	0.00	0.00	-8.95	-4.01
8 b	0.00	-0.30	0.00	0.00	-3.15	-1.81
9 top	3.18	-3.33	0.00	0.00	-7.25	-4.32
9 a	3.01	-2.94	0.00	0.00	-6.05	-3.79
9 b	2.23	-0.98	0.00	0.00	-2.54	-1.57

VEH: R1 - TOLL ROAD BRUG(5.75.44) page 43
date 11/09/2009; time 13:23:06
Cline Avenue - Load Rating - Double Box - 3 Webs - 48'-4" Wi

Summary of the results (Maximum)

Section	--- Deadload ----		----- P.T. ------		--- Live load ---	
	Moment	Ax.Frc	Moment	Ax.Frc	Moment	Ax.Frc
1 a	-0.18	0.02	0.00	0.00	0.12	0.01
1 b	-2.51	0.28	0.00	0.00	0.65	0.11
1 c	-6.42	0.94	0.00	0.00	0.06	0.14
1 right	-7.58	1.16	0.00	0.00	0.07	0.17
2 left	-4.40	1.39	0.00	0.00	-1.27	1.50
2 a	-3.50	1.18	0.00	0.00	0.47	1.26
2 b	0.09	0.38	0.00	0.00	3.37	-0.08
2 c	0.96	0.24	0.00	0.00	4.69	-0.62
2 right	-5.02	1.86	0.00	0.00	1.50	1.78
3 left	-5.02	1.86	0.00	0.00	1.15	1.81
3 a	-4.07	1.61	0.00	0.00	1.43	1.56
3 b	-0.19	0.59	0.00	0.00	2.94	0.38
3 c	0.96	0.24	0.00	0.00	4.69	-0.62
3 right	-4.40	1.39	0.00	0.00	-1.27	1.50
4 left	-7.58	1.16	0.00	0.00	0.07	0.17
4 a	-6.42	0.94	0.00	0.00	0.06	0.14
4 b	-2.51	0.28	0.00	0.00	0.65	0.11
4 c	-0.18	0.02	0.00	0.00	0.12	0.00
5 a	-0.88	0.11	0.00	0.00	1.37	-0.07
5 b	1.78	2.52	0.00	0.00	0.07	0.63
5 c	-1.83	1.84	0.00	0.00	1.39	-0.39
6 a	-1.83	1.84	0.00	0.00	1.39	-0.39
6 b	1.78	2.52	0.00	0.00	0.07	0.63
6 c	-0.88	0.11	0.00	0.00	1.37	-0.07
7 top	-3.18	-3.33	0.00	0.00	6.77	-3.46
7 a	-3.01	-2.94	0.00	0.00	5.87	-3.01
7 b	-2.23	-0.98	0.00	0.00	2.93	-1.25
8 top	0.00	-3.07	0.00	0.00	12.63	-3.75
8 a	0.00	-2.60	0.00	0.00	10.95	-3.28
8 b	0.00	-0.30	0.00	0.00	4.09	-1.44
9 top	3.18	-3.33	0.00	0.00	5.54	-4.96
9 a	3.01	-2.94	0.00	0.00	4.91	-4.27
9 b	2.23	-0.98	0.00	0.00	1.87	-1.80

VEH: R1 - TOLL ROAD BRUG(5.75.44) page 44
date 11/09/2009; time 13:23:06
Cline Avenue - Load Rating - Double Box - 3 Webs - 48'-4" Wi

Summary of the results (Minimum)

Section	--- Deadload ----		----- P.T. ------		--- Live load ---	
	Moment	Ax.Frc	Moment	Ax.Frc	Moment	Ax.Frc
1 a	-0.18	0.02	0.00	0.00	-0.02	0.01
1 b	-2.51	0.28	0.00	0.00	-0.30	0.17
1 c	-6.42	0.94	0.00	0.00	-5.88	0.72
1 right	-7.58	1.16	0.00	0.00	-7.51	1.00
2 left	-4.40	1.39	0.00	0.00	-7.73	-0.20
2 a	-3.50	1.18	0.00	0.00	-5.88	-0.55
2 b	0.09	0.38	0.00	0.00	-1.67	-0.38
2 c	0.96	0.24	0.00	0.00	-0.42	0.15
2 right	-5.02	1.86	0.00	0.00	-11.93	-0.51
3 left	-5.02	1.86	0.00	0.00	-11.93	-0.51
3 a	-4.07	1.61	0.00	0.00	-9.95	-0.68
3 b	-0.19	0.59	0.00	0.00	-1.87	-0.59
3 c	0.96	0.24	0.00	0.00	-0.42	0.15
3 right	-4.40	1.39	0.00	0.00	-7.73	-0.20
4 left	-7.58	1.16	0.00	0.00	-7.51	1.00
4 a	-6.42	0.94	0.00	0.00	-5.88	0.72
4 b	-2.51	0.28	0.00	0.00	-0.30	0.17
4 c	-0.18	0.02	0.00	0.00	-0.02	0.01
5 a	-0.88	0.11	0.00	0.00	-1.23	0.52
5 b	1.78	2.52	0.00	0.00	-0.12	1.56
5 c	-1.83	1.84	0.00	0.00	-1.53	1.72
6 a	-1.83	1.84	0.00	0.00	-1.53	1.72
6 b	1.78	2.52	0.00	0.00	-0.12	1.56
6 c	-0.88	0.11	0.00	0.00	-1.23	0.52
7 top	-3.18	-3.33	0.00	0.00	-5.54	-4.96
7 a	-3.01	-2.94	0.00	0.00	-4.91	-4.27
7 b	-2.23	-0.98	0.00	0.00	-1.87	-1.80
8 top	0.00	-3.07	0.00	0.00	-12.63	-3.75
8 a	0.00	-2.60	0.00	0.00	-10.95	-3.28
8 b	0.00	-0.30	0.00	0.00	-4.09	-1.44
9 top	3.18	-3.33	0.00	0.00	-6.77	-3.46
9 a	3.01	-2.94	0.00	0.00	-5.87	-3.01
9 b	2.23	-0.98	0.00	0.00	-2.93	-1.25

II_A_R2_EL.OUT 9/11/2009

VEH: R2 - TOLL ROAD BRUG(5.75.44) page 43
date 11/09/2009; time 13:23:07
Cline Avenue - Load Rating - Double Box - 3 Webs - 48'-4" Wi

Summary of the results (Maximum)

Section	--- Deadload ----		----- P.T. ------		--- Live load ---	
	Moment	Ax.Frc	Moment	Ax.Frc	Moment	Ax.Frc
1 a	-0.18	0.02	0.00	0.00	0.17	0.00
1 b	-2.51	0.28	0.00	0.00	1.02	0.07
1 c	-6.42	0.94	0.00	0.00	0.18	0.46
1 right	-7.58	1.16	0.00	0.00	0.05	0.17
2 left	-4.40	1.39	0.00	0.00	-1.21	1.36
2 a	-3.50	1.18	0.00	0.00	0.86	1.10
2 b	0.09	0.38	0.00	0.00	3.42	0.17
2 c	0.96	0.24	0.00	0.00	4.57	-0.51
2 right	-5.02	1.86	0.00	0.00	1.58	1.71
3 left	-5.02	1.86	0.00	0.00	1.34	1.72
3 a	-4.07	1.61	0.00	0.00	1.89	1.31
3 b	-0.19	0.59	0.00	0.00	3.02	0.34
3 c	0.96	0.24	0.00	0.00	4.57	-0.51
3 right	-4.40	1.39	0.00	0.00	-1.21	1.36
4 left	-7.58	1.16	0.00	0.00	0.05	0.17
4 a	-6.42	0.94	0.00	0.00	0.18	0.46
4 b	-2.51	0.28	0.00	0.00	1.01	0.05
4 c	-0.18	0.02	0.00	0.00	0.17	0.00
5 a	-0.88	0.11	0.00	0.00	1.28	-0.14
5 b	1.78	2.52	0.00	0.00	0.06	0.50
5 c	-1.83	1.84	0.00	0.00	1.27	-0.34
6 a	-1.83	1.84	0.00	0.00	1.27	-0.34
6 b	1.78	2.52	0.00	0.00	0.06	0.50
6 c	-0.88	0.11	0.00	0.00	1.28	-0.14
7 top	-3.18	-3.33	0.00	0.00	5.57	-3.59
7 a	-3.01	-2.94	0.00	0.00	4.79	-3.02
7 b	-2.23	-0.98	0.00	0.00	2.36	-1.11
8 top	0.00	-3.07	0.00	0.00	11.22	-3.85
8 a	0.00	-2.60	0.00	0.00	9.61	-3.26
8 b	0.00	-0.30	0.00	0.00	3.50	-1.26
9 top	3.18	-3.33	0.00	0.00	4.93	-5.55
9 a	3.01	-2.94	0.00	0.00	4.32	-4.61
9 b	2.23	-0.98	0.00	0.00	1.63	-1.64

II_A_R2_EL.OUT 9/11/2009

VEH: R2 - TOLL ROAD BRUG(5.75.44) page 44
date 11/09/2009; time 13:23:07
Cline Avenue - Load Rating - Double Box - 3 Webs - 48'-4" Wi

Summary of the results (Minimum)

Section	--- Deadload ----		----- P.T. ------		--- Live load ---	
	Moment	Ax.Frc	Moment	Ax.Frc	Moment	Ax.Frc
1 a	-0.18	0.02	0.00	0.00	-0.03	0.00
1 b	-2.51	0.28	0.00	0.00	-0.11	0.11
1 c	-6.42	0.94	0.00	0.00	-5.05	0.61
1 right	-7.58	1.16	0.00	0.00	-6.67	0.95
2 left	-4.40	1.39	0.00	0.00	-6.63	-0.20
2 a	-3.50	1.18	0.00	0.00	-4.99	-0.48
2 b	0.09	0.38	0.00	0.00	-1.56	-0.33
2 c	0.96	0.24	0.00	0.00	-0.36	0.13
2 right	-5.02	1.86	0.00	0.00	-10.43	-0.45
3 left	-5.02	1.86	0.00	0.00	-10.43	-0.45
3 a	-4.07	1.61	0.00	0.00	-8.65	-0.61
3 b	-0.19	0.59	0.00	0.00	-1.88	-0.58
3 c	0.96	0.24	0.00	0.00	-0.36	0.13
3 right	-4.40	1.39	0.00	0.00	-6.63	-0.20
4 left	-7.58	1.16	0.00	0.00	-6.67	0.95
4 a	-6.42	0.94	0.00	0.00	-5.05	0.61
4 b	-2.51	0.28	0.00	0.00	-0.11	0.11
4 c	-0.18	0.02	0.00	0.00	-0.03	0.00
5 a	-0.88	0.11	0.00	0.00	-1.14	0.49
5 b	1.78	2.52	0.00	0.00	-0.10	1.26
5 c	-1.83	1.84	0.00	0.00	-1.40	1.47
6 a	-1.83	1.84	0.00	0.00	-1.40	1.47
6 b	1.78	2.52	0.00	0.00	-0.10	1.26
6 c	-0.88	0.11	0.00	0.00	-1.14	0.49
7 top	-3.18	-3.33	0.00	0.00	-4.93	-5.55
7 a	-3.01	-2.94	0.00	0.00	-4.31	-4.61
7 b	-2.23	-0.98	0.00	0.00	-1.63	-1.64
8 top	0.00	-3.07	0.00	0.00	-11.22	-3.85
8 a	0.00	-2.60	0.00	0.00	-9.61	-3.26
8 b	0.00	-0.30	0.00	0.00	-3.50	-1.26
9 top	3.18	-3.33	0.00	0.00	-5.57	-3.59
9 a	3.01	-2.94	0.00	0.00	-4.79	-3.02
9 b	2.23	-0.98	0.00	0.00	-2.36	-1.11

VEH: R3 - TOLL ROAD BRUG(5.75.44) page 43
date 11/09/2009; time 13:23:07
Cline Avenue - Load Rating - Double Box - 3 Webs - 48'-4" Wi

Summary of the results (Maximum)

Section	--- Deadload ---		----- P.T. ------		--- Live load ---	
	Moment	Ax.Frc	Moment	Ax.Frc	Moment	Ax.Frc
1 a	-0.18	0.02	0.00	0.00	0.17	0.00
1 b	-2.51	0.28	0.00	0.00	0.81	0.09
1 c	-6.42	0.94	0.00	0.00	0.03	0.16
1 right	-7.58	1.16	0.00	0.00	0.05	0.19
2 left	-4.40	1.39	0.00	0.00	-1.22	1.35
2 a	-3.50	1.18	0.00	0.00	0.62	1.12
2 b	0.09	0.38	0.00	0.00	3.32	0.19
2 c	0.96	0.24	0.00	0.00	4.36	-0.50
2 right	-5.02	1.86	0.00	0.00	1.41	1.64
3 left	-5.02	1.86	0.00	0.00	1.12	0.42
3 a	-4.07	1.61	0.00	0.00	1.53	1.37
3 b	-0.19	0.59	0.00	0.00	2.93	0.30
3 c	0.96	0.24	0.00	0.00	4.36	-0.50
3 right	-4.40	1.39	0.00	0.00	-1.22	1.35
4 left	-7.58	1.16	0.00	0.00	0.05	0.19
4 a	-6.42	0.94	0.00	0.00	0.03	0.16
4 b	-2.51	0.28	0.00	0.00	0.80	0.06
4 c	-0.18	0.02	0.00	0.00	0.16	0.00
5 a	-0.88	0.11	0.00	0.00	1.34	-0.17
5 b	1.78	2.52	0.00	0.00	0.05	0.44
5 c	-1.83	1.84	0.00	0.00	1.34	-0.41
6 a	-1.83	1.84	0.00	0.00	1.34	-0.41
6 b	1.78	2.52	0.00	0.00	0.05	0.44
6 c	-0.88	0.11	0.00	0.00	1.34	-0.17
7 top	-3.18	-3.33	0.00	0.00	5.43	-3.58
7 a	-3.01	-2.94	0.00	0.00	4.60	-3.10
7 b	-2.23	-0.98	0.00	0.00	2.14	-1.29
8 top	0.00	-3.07	0.00	0.00	11.57	-3.81
8 a	0.00	-2.60	0.00	0.00	9.89	-3.32
8 b	0.00	-0.30	0.00	0.00	3.44	-1.46
9 top	3.18	-3.33	0.00	0.00	5.08	-5.09
9 a	3.01	-2.94	0.00	0.00	4.43	-4.38
9 b	2.23	-0.98	0.00	0.00	1.60	-1.84

VEH: R3 - TOLL ROAD BRUG(5.75.44) page 44
date 11/09/2009; time 13:23:07
Cline Avenue - Load Rating - Double Box - 3 Webs - 48'-4" Wi

Summary of the results (Minimum)

Section	--- Deadload ---		----- P.T. ------		--- Live load ---	
	Moment	Ax.Frc	Moment	Ax.Frc	Moment	Ax.Frc
1 a	-0.18	0.02	0.00	0.00	-0.02	0.01
1 b	-2.51	0.28	0.00	0.00	-0.18	0.13
1 c	-6.42	0.94	0.00	0.00	-5.57	0.64
1 right	-7.58	1.16	0.00	0.00	-7.29	0.92
2 left	-4.40	1.39	0.00	0.00	-7.07	-0.14
2 a	-3.50	1.18	0.00	0.00	-5.40	-0.44
2 b	0.09	0.38	0.00	0.00	-1.70	-0.33
2 c	0.96	0.24	0.00	0.00	-0.33	0.12
2 right	-5.02	1.86	0.00	0.00	-10.93	-0.46
3 left	-5.02	1.86	0.00	0.00	-10.93	-0.46
3 a	-4.07	1.61	0.00	0.00	-9.22	-0.60
3 b	-0.19	0.59	0.00	0.00	-1.85	-0.45
3 c	0.96	0.24	0.00	0.00	-0.33	0.12
3 right	-4.40	1.39	0.00	0.00	-7.07	-0.14
4 left	-7.58	1.16	0.00	0.00	-7.29	0.92
4 a	-6.42	0.94	0.00	0.00	-5.57	0.64
4 b	-2.51	0.28	0.00	0.00	-0.18	0.13
4 c	-0.18	0.02	0.00	0.00	-0.02	0.01
5 a	-0.88	0.11	0.00	0.00	-1.20	0.53
5 b	1.78	2.52	0.00	0.00	-0.08	1.18
5 c	-1.83	1.84	0.00	0.00	-1.48	1.35
6 a	-1.83	1.84	0.00	0.00	-1.48	1.35
6 b	1.78	2.52	0.00	0.00	-0.08	1.18
6 c	-0.88	0.11	0.00	0.00	-1.20	0.53
7 top	-3.18	-3.33	0.00	0.00	-5.08	-5.09
7 a	-3.01	-2.94	0.00	0.00	-4.43	-4.38
7 b	-2.23	-0.98	0.00	0.00	-1.60	-1.84
8 top	0.00	-3.07	0.00	0.00	-11.57	-3.81
8 a	0.00	-2.60	0.00	0.00	-9.89	-3.32
8 b	0.00	-0.30	0.00	0.00	-3.44	-1.46
9 top	3.18	-3.33	0.00	0.00	-5.43	-3.58
9 a	3.01	-2.94	0.00	0.00	-4.60	-3.10
9 b	2.23	-0.98	0.00	0.00	-2.14	-1.29

II_A_R4_EL.OUT 9/11/2009

VEH: R4 - MICHIGAN T BRUG(5.75.44) page 43
date 11/09/2009; time 13:23:08
Cline Avenue - Load Rating - Double Box - 3 Webs - 48'-4" Wi

Summary of the results (Maximum)

Section	--- Deadload ----		----- P.T. ------		--- Live load ---	
	Moment	Ax.Frc	Moment	Ax.Frc	Moment	Ax.Frc
1 a	-0.18	0.02	0.00	0.00	0.11	0.00
1 b	-2.51	0.28	0.00	0.00	0.75	0.06
1 c	-6.42	0.94	0.00	0.00	0.35	0.35
1 right	-7.58	1.16	0.00	0.00	0.07	0.61
2 left	-4.40	1.39	0.00	0.00	0.54	1.39
2 a	-3.50	1.18	0.00	0.00	2.08	1.15
2 b	0.09	0.38	0.00	0.00	3.72	0.11
2 c	0.96	0.24	0.00	0.00	4.14	-0.52
2 right	-5.02	1.86	0.00	0.00	2.82	1.80
3 left	-5.02	1.86	0.00	0.00	2.73	1.76
3 a	-4.07	1.61	0.00	0.00	2.94	1.41
3 b	-0.19	0.59	0.00	0.00	3.11	0.43
3 c	0.96	0.24	0.00	0.00	4.14	-0.52
3 right	-4.40	1.39	0.00	0.00	0.54	1.39
4 left	-7.58	1.16	0.00	0.00	0.07	0.61
4 a	-6.42	0.94	0.00	0.00	0.35	0.35
4 b	-2.51	0.28	0.00	0.00	0.74	0.03
4 c	-0.18	0.02	0.00	0.00	0.11	0.00
5 a	-0.88	0.11	0.00	0.00	1.74	-0.37
5 b	1.78	2.52	0.00	0.00	0.07	0.50
5 c	-1.83	1.84	0.00	0.00	1.67	-0.31
6 a	-1.83	1.84	0.00	0.00	1.67	-0.31
6 b	1.78	2.52	0.00	0.00	0.07	0.50
6 c	-0.88	0.11	0.00	0.00	1.74	-0.37
7 top	-3.18	-3.33	0.00	0.00	5.82	-1.18
7 a	-3.01	-2.94	0.00	0.00	5.13	-1.04
7 b	-2.23	-0.98	0.00	0.00	2.52	-0.92
8 top	0.00	-3.07	0.00	0.00	13.15	-2.39
8 a	0.00	-2.60	0.00	0.00	11.41	-2.07
8 b	0.00	-0.30	0.00	0.00	4.16	-1.04
9 top	3.18	-3.33	0.00	0.00	6.05	-4.29
9 a	3.01	-2.94	0.00	0.00	5.32	-3.55
9 b	2.23	-0.98	0.00	0.00	2.01	-1.31

II_A_R4_EL.OUT 9/11/2009

VEH: R4 - MICHIGAN T BRUG(5.75.44) page 44
date 11/09/2009; time 13:23:08
Cline Avenue - Load Rating - Double Box - 3 Webs - 48'-4" Wi

Summary of the results (Minimum)

Section	--- Deadload ----		----- P.T. ------		--- Live load ---	
	Moment	Ax.Frc	Moment	Ax.Frc	Moment	Ax.Frc
1 a	-0.18	0.02	0.00	0.00	-0.03	0.00
1 b	-2.51	0.28	0.00	0.00	-0.02	0.08
1 c	-6.42	0.94	0.00	0.00	-4.34	0.43
1 right	-7.58	1.16	0.00	0.00	-5.60	0.68
2 left	-4.40	1.39	0.00	0.00	-5.89	-0.54
2 a	-3.50	1.18	0.00	0.00	-5.20	-0.57
2 b	0.09	0.38	0.00	0.00	-1.79	-0.19
2 c	0.96	0.24	0.00	0.00	-0.43	0.15
2 right	-5.02	1.86	0.00	0.00	-10.93	-0.66
3 left	-5.02	1.86	0.00	0.00	-10.93	-0.66
3 a	-4.07	1.61	0.00	0.00	-9.36	-0.78
3 b	-0.19	0.59	0.00	0.00	-2.05	-0.57
3 c	0.96	0.24	0.00	0.00	-0.43	0.15
3 right	-4.40	1.39	0.00	0.00	-5.89	-0.54
4 left	-7.58	1.16	0.00	0.00	-5.60	0.68
4 a	-6.42	0.94	0.00	0.00	-4.34	0.43
4 b	-2.51	0.28	0.00	0.00	-0.02	0.08
4 c	-0.18	0.02	0.00	0.00	-0.03	0.00
5 a	-0.88	0.11	0.00	0.00	-1.55	0.68
5 b	1.78	2.52	0.00	0.00	-0.11	1.33
5 c	-1.83	1.84	0.00	0.00	-1.87	1.75
6 a	-1.83	1.84	0.00	0.00	-1.87	1.75
6 b	1.78	2.52	0.00	0.00	-0.11	1.33
6 c	-0.88	0.11	0.00	0.00	-1.55	0.68
7 top	-3.18	-3.33	0.00	0.00	-6.05	-4.29
7 a	-3.01	-2.94	0.00	0.00	-5.32	-3.55
7 b	-2.23	-0.98	0.00	0.00	-2.01	-1.31
8 top	0.00	-3.07	0.00	0.00	-13.15	-2.39
8 a	0.00	-2.60	0.00	0.00	-11.41	-2.07
8 b	0.00	-0.30	0.00	0.00	-4.16	-1.04
9 top	3.18	-3.33	0.00	0.00	-5.82	-1.18
9 a	3.01	-2.94	0.00	0.00	-5.13	-1.04
9 b	2.23	-0.98	0.00	0.00	-2.52	-0.92

VEH: R5 - MICHIGAN T BRUG(5.75.44) page 43
date 11/09/2009; time 13:23:09
Cline Avenue - Load Rating - Double Box - 3 Webs - 48'-4" Wi

Summary of the results (Maximum)

Section	--- Deadload ----		----- P.T. ------		--- Live load ---	
	Moment	Ax.Frc	Moment	Ax.Frc	Moment	Ax.Frc
1 a	-0.18	0.02	0.00	0.00	0.04	0.01
1 b	-2.51	0.28	0.00	0.00	0.11	0.13
1 c	-6.42	0.94	0.00	0.00	0.05	0.20
1 right	-7.58	1.16	0.00	0.00	0.06	0.25
2 left	-4.40	1.39	0.00	0.00	0.19	1.55
2 a	-3.50	1.18	0.00	0.00	1.16	1.39
2 b	0.09	0.38	0.00	0.00	3.42	-0.04
2 c	0.96	0.24	0.00	0.00	4.18	-0.68
2 right	-5.02	1.86	0.00	0.00	2.37	1.85
3 left	-5.02	1.86	0.00	0.00	2.08	1.85
3 a	-4.07	1.61	0.00	0.00	2.07	1.71
3 b	-0.19	0.59	0.00	0.00	2.81	0.49
3 c	0.96	0.24	0.00	0.00	4.18	-0.68
3 right	-4.40	1.39	0.00	0.00	0.19	1.55
4 left	-7.58	1.16	0.00	0.00	0.06	0.25
4 a	-6.42	0.94	0.00	0.00	0.05	0.20
4 b	-2.51	0.28	0.00	0.00	0.11	0.13
4 c	-0.18	0.02	0.00	0.00	0.03	0.01
5 a	-0.88	0.11	0.00	0.00	1.81	-0.24
5 b	1.78	2.52	0.00	0.00	0.08	0.67
5 c	-1.83	1.84	0.00	0.00	1.80	-0.48
6 a	-1.83	1.84	0.00	0.00	1.80	-0.48
6 b	1.78	2.52	0.00	0.00	0.08	0.67
6 c	-0.88	0.11	0.00	0.00	1.81	-0.24
7 top	-3.18	-3.33	0.00	0.00	7.05	-1.54
7 a	-3.01	-2.94	0.00	0.00	6.23	-1.38
7 b	-2.23	-0.98	0.00	0.00	3.21	-1.21
8 top	0.00	-3.07	0.00	0.00	15.03	-3.08
8 a	0.00	-2.60	0.00	0.00	13.13	-2.80
8 b	0.00	-0.30	0.00	0.00	4.87	-1.41
9 top	3.18	-3.33	0.00	0.00	6.88	-3.41
9 a	3.01	-2.94	0.00	0.00	6.03	-3.04
9 b	2.23	-0.98	0.00	0.00	2.27	-1.64

VEH: R5 - MICHIGAN T BRUG(5.75.44) page 44
date 11/09/2009; time 13:23:09
Cline Avenue - Load Rating - Double Box - 3 Webs - 48'-4" Wi

Summary of the results (Minimum)

Section	--- Deadload ----		----- P.T. ------		--- Live load ---	
	Moment	Ax.Frc	Moment	Ax.Frc	Moment	Ax.Frc
1 a	-0.18	0.02	0.00	0.00	-0.02	0.01
1 b	-2.51	0.28	0.00	0.00	-0.81	0.18
1 c	-6.42	0.94	0.00	0.00	-5.88	0.62
1 right	-7.58	1.16	0.00	0.00	-7.23	0.77
2 left	-4.40	1.39	0.00	0.00	-7.66	-0.24
2 a	-3.50	1.18	0.00	0.00	-6.61	-0.65
2 b	0.09	0.38	0.00	0.00	-2.05	-0.35
2 c	0.96	0.24	0.00	0.00	-0.49	0.18
2 right	-5.02	1.86	0.00	0.00	-13.19	-0.71
3 left	-5.02	1.86	0.00	0.00	-13.19	-0.71
3 a	-4.07	1.61	0.00	0.00	-11.36	-0.83
3 b	-0.19	0.59	0.00	0.00	-2.25	-0.67
3 c	0.96	0.24	0.00	0.00	-0.49	0.18
3 right	-4.40	1.39	0.00	0.00	-7.66	-0.24
4 left	-7.58	1.16	0.00	0.00	-7.23	0.77
4 a	-6.42	0.94	0.00	0.00	-5.88	0.62
4 b	-2.51	0.28	0.00	0.00	-0.81	0.18
4 c	-0.18	0.02	0.00	0.00	-0.02	0.01
5 a	-0.88	0.11	0.00	0.00	-1.62	0.70
5 b	1.78	2.52	0.00	0.00	-0.13	1.71
5 c	-1.83	1.84	0.00	0.00	-1.99	2.00
6 a	-1.83	1.84	0.00	0.00	-1.99	2.00
6 b	1.78	2.52	0.00	0.00	-0.13	1.71
6 c	-0.88	0.11	0.00	0.00	-1.62	0.70
7 top	-3.18	-3.33	0.00	0.00	-6.88	-3.41
7 a	-3.01	-2.94	0.00	0.00	-6.03	-3.04
7 b	-2.23	-0.98	0.00	0.00	-2.27	-1.64
8 top	0.00	-3.07	0.00	0.00	-15.03	-3.08
8 a	0.00	-2.60	0.00	0.00	-13.13	-2.80
8 b	0.00	-0.30	0.00	0.00	-4.87	-1.41
9 top	3.18	-3.33	0.00	0.00	-7.05	-1.54
9 a	3.01	-2.94	0.00	0.00	-6.23	-1.38
9 b	2.23	-0.98	0.00	0.00	-3.21	-1.21

VEH: S1 - SPECIAL TR BRUG(5.75.44) page 43
date 11/09/2009; time 13:23:09
Cline Avenue - Load Rating - Double Box - 3 Webs - 48'-4" Wi

Summary of the results (Maximum)

Section	--- Deadload ----		----- P.T. ------		--- Live load ---	
	Moment	Ax.Frc	Moment	Ax.Frc	Moment	Ax.Frc
1 a	-0.18	0.02	0.00	0.00	0.23	0.01
1 b	-2.51	0.28	0.00	0.00	1.13	0.13
1 c	-6.42	0.94	0.00	0.00	0.07	0.10
1 right	-7.58	1.16	0.00	0.00	0.09	0.13
2 left	-4.40	1.39	0.00	0.00	-1.11	-0.16
2 a	-3.50	1.18	0.00	0.00	-0.57	1.31
2 b	0.09	0.38	0.00	0.00	3.73	0.15
2 c	0.96	0.24	0.00	0.00	5.77	-0.64
2 right	-5.02	1.86	0.00	0.00	0.82	0.28
3 left	-5.02	1.86	0.00	0.00	0.82	0.28
3 a	-4.07	1.61	0.00	0.00	0.77	0.24
3 b	-0.19	0.59	0.00	0.00	3.44	0.32
3 c	0.96	0.24	0.00	0.00	5.77	-0.64
3 right	-4.40	1.39	0.00	0.00	-1.11	-0.16
4 left	-7.58	1.16	0.00	0.00	0.09	0.13
4 a	-6.42	0.94	0.00	0.00	0.07	0.10
4 b	-2.51	0.28	0.00	0.00	1.12	0.12
4 c	-0.18	0.02	0.00	0.00	0.23	0.00
5 a	-0.88	0.11	0.00	0.00	1.10	0.10
5 b	1.78	2.52	0.00	0.00	0.06	0.63
5 c	-1.83	1.84	0.00	0.00	1.18	-0.48
6 a	-1.83	1.84	0.00	0.00	1.18	-0.48
6 b	1.78	2.52	0.00	0.00	0.06	0.63
6 c	-0.88	0.11	0.00	0.00	1.10	0.10
7 top	-3.18	-3.33	0.00	0.00	7.45	-4.79
7 a	-3.01	-2.94	0.00	0.00	6.24	-4.13
7 b	-2.23	-0.98	0.00	0.00	2.81	-1.67
8 top	0.00	-3.07	0.00	0.00	12.17	-5.07
8 a	0.00	-2.60	0.00	0.00	10.31	-4.40
8 b	0.00	-0.30	0.00	0.00	3.71	-1.91
9 top	3.18	-3.33	0.00	0.00	4.99	-6.99
9 a	3.01	-2.94	0.00	0.00	4.43	-5.95
9 b	2.23	-0.98	0.00	0.00	1.64	-2.41

VEH: S1 - SPECIAL TR BRUG(5.75.44) page 44
date 11/09/2009; time 13:23:09
Cline Avenue - Load Rating - Double Box - 3 Webs - 48'-4" Wi

Summary of the results (Minimum)

Section	--- Deadload ----		----- P.T. ------		--- Live load ---	
	Moment	Ax.Frc	Moment	Ax.Frc	Moment	Ax.Frc
1 a	-0.18	0.02	0.00	0.00	-0.03	0.01
1 b	-2.51	0.28	0.00	0.00	-0.29	0.19
1 c	-6.42	0.94	0.00	0.00	-7.39	0.97
1 right	-7.58	1.16	0.00	0.00	-9.65	1.39
2 left	-4.40	1.39	0.00	0.00	-10.07	1.42
2 a	-3.50	1.18	0.00	0.00	-7.52	0.68
2 b	0.09	0.38	0.00	0.00	-1.88	-0.53
2 c	0.96	0.24	0.00	0.00	-0.37	0.14
2 right	-5.02	1.86	0.00	0.00	-13.23	0.79
3 left	-5.02	1.86	0.00	0.00	-13.23	0.79
3 a	-4.07	1.61	0.00	0.00	-10.44	-0.57
3 b	-0.19	0.59	0.00	0.00	-2.13	-0.64
3 c	0.96	0.24	0.00	0.00	-0.37	0.14
3 right	-4.40	1.39	0.00	0.00	-10.07	1.42
4 left	-7.58	1.16	0.00	0.00	-9.65	1.39
4 a	-6.42	0.94	0.00	0.00	-7.39	0.97
4 b	-2.51	0.28	0.00	0.00	-0.29	0.19
4 c	-0.18	0.02	0.00	0.00	-0.03	0.01
5 a	-0.88	0.11	0.00	0.00	-0.99	0.41
5 b	1.78	2.52	0.00	0.00	-0.10	1.52
5 c	-1.83	1.84	0.00	0.00	-1.27	1.51
6 a	-1.83	1.84	0.00	0.00	-1.27	1.51
6 b	1.78	2.52	0.00	0.00	-0.10	1.52
6 c	-0.88	0.11	0.00	0.00	-0.99	0.41
7 top	-3.18	-3.33	0.00	0.00	-4.99	-6.99
7 a	-3.01	-2.94	0.00	0.00	-4.43	-5.95
7 b	-2.23	-0.98	0.00	0.00	-1.64	-2.41
8 top	0.00	-3.07	0.00	0.00	-12.17	-5.07
8 a	0.00	-2.60	0.00	0.00	-10.31	-4.40
8 b	0.00	-0.30	0.00	0.00	-3.71	-1.91
9 top	3.18	-3.33	0.00	0.00	-7.45	-4.79
9 a	3.01	-2.94	0.00	0.00	-6.24	-4.13
9 b	2.23	-0.98	0.00	0.00	-2.81	-1.67

VEH: S2 - SPECIAL TR BRUG(5.75.44) page 43
date 11/09/2009; time 13:23:10
Cline Avenue - Load Rating - Double Box - 3 Webs - 48'-4" Wi

Summary of the results (Maximum)

Section	--- Deadload ----		----- P.T. ------		--- Live load ---	
	Moment	Ax.Frc	Moment	Ax.Frc	Moment	Ax.Frc
1 a	-0.18	0.02	0.00	0.00	0.19	0.01
1 b	-2.51	0.28	0.00	0.00	0.95	0.14
1 c	-6.42	0.94	0.00	0.00	0.09	0.08
1 right	-7.58	1.16	0.00	0.00	0.12	0.10
2 left	-4.40	1.39	0.00	0.00	-0.94	-0.14
2 a	-3.50	1.18	0.00	0.00	-0.64	1.21
2 b	0.09	0.38	0.00	0.00	3.30	0.15
2 c	0.96	0.24	0.00	0.00	5.32	-0.62
2 right	-5.02	1.86	0.00	0.00	0.68	0.23
3 left	-5.02	1.86	0.00	0.00	0.68	0.23
3 a	-4.07	1.61	0.00	0.00	0.64	0.20
3 b	-0.19	0.59	0.00	0.00	3.07	0.30
3 c	0.96	0.24	0.00	0.00	5.32	-0.62
3 right	-4.40	1.39	0.00	0.00	-0.94	-0.14
4 left	-7.58	1.16	0.00	0.00	0.12	0.10
4 a	-6.42	0.94	0.00	0.00	0.09	0.08
4 b	-2.51	0.28	0.00	0.00	0.93	0.13
4 c	-0.18	0.02	0.00	0.00	0.19	0.01
5 a	-0.88	0.11	0.00	0.00	0.94	0.16
5 b	1.78	2.52	0.00	0.00	0.05	0.63
5 c	-1.83	1.84	0.00	0.00	1.04	-0.46
6 a	-1.83	1.84	0.00	0.00	1.04	-0.46
6 b	1.78	2.52	0.00	0.00	0.05	0.63
6 c	-0.88	0.11	0.00	0.00	0.94	0.16
7 top	-3.18	-3.33	0.00	0.00	7.09	-4.14
7 a	-3.01	-2.94	0.00	0.00	6.02	-3.55
7 b	-2.23	-0.98	0.00	0.00	2.75	-1.44
8 top	0.00	-3.07	0.00	0.00	11.13	-4.41
8 a	0.00	-2.60	0.00	0.00	9.45	-3.81
8 b	0.00	-0.30	0.00	0.00	3.50	-1.67
9 top	3.18	-3.33	0.00	0.00	4.47	-6.01
9 a	3.01	-2.94	0.00	0.00	3.98	-5.08
9 b	2.23	-0.98	0.00	0.00	1.51	-2.04

VEH: S2 - SPECIAL TR BRUG(5.75.44) page 44
date 11/09/2009; time 13:23:10
Cline Avenue - Load Rating - Double Box - 3 Webs - 48'-4" Wi

Summary of the results (Minimum)

Section	--- Deadload ----		----- P.T. ------		--- Live load ---	
	Moment	Ax.Frc	Moment	Ax.Frc	Moment	Ax.Frc
1 a	-0.18	0.02	0.00	0.00	-0.04	0.01
1 b	-2.51	0.28	0.00	0.00	-0.31	0.18
1 c	-6.42	0.94	0.00	0.00	-6.78	0.92
1 right	-7.58	1.16	0.00	0.00	-8.72	1.29
2 left	-4.40	1.39	0.00	0.00	-9.41	1.28
2 a	-3.50	1.18	0.00	0.00	-7.16	0.61
2 b	0.09	0.38	0.00	0.00	-1.41	-0.34
2 c	0.96	0.24	0.00	0.00	-0.35	0.14
2 right	-5.02	1.86	0.00	0.00	-12.17	0.73
3 left	-5.02	1.86	0.00	0.00	-12.17	0.73
3 a	-4.07	1.61	0.00	0.00	-9.66	0.42
3 b	-0.19	0.59	0.00	0.00	-1.80	-0.60
3 c	0.96	0.24	0.00	0.00	-0.35	0.14
3 right	-4.40	1.39	0.00	0.00	-9.41	1.28
4 left	-7.58	1.16	0.00	0.00	-8.72	1.29
4 a	-6.42	0.94	0.00	0.00	-6.79	0.92
4 b	-2.51	0.28	0.00	0.00	-0.31	0.18
4 c	-0.18	0.02	0.00	0.00	-0.04	0.01
5 a	-0.88	0.11	0.00	0.00	-0.86	0.35
5 b	1.78	2.52	0.00	0.00	-0.10	1.51
5 c	-1.83	1.84	0.00	0.00	-1.11	1.38
6 a	-1.83	1.84	0.00	0.00	-1.11	1.39
6 b	1.78	2.52	0.00	0.00	-0.10	1.51
6 c	-0.88	0.11	0.00	0.00	-0.86	0.35
7 top	-3.18	-3.33	0.00	0.00	-4.47	-6.01
7 a	-3.01	-2.94	0.00	0.00	-3.98	-5.08
7 b	-2.23	-0.98	0.00	0.00	-1.51	-2.04
8 top	0.00	-3.07	0.00	0.00	-11.13	-4.41
8 a	0.00	-2.60	0.00	0.00	-9.45	-3.81
8 b	0.00	-0.30	0.00	0.00	-3.50	-1.67
9 top	3.18	-3.33	0.00	0.00	-7.09	-4.14
9 a	3.01	-2.94	0.00	0.00	-6.02	-3.55
9 b	2.23	-0.98	0.00	0.00	-2.75	-1.44

VEH: S3 - SPECIAL TR BRUG(5.75.44) page 43
date 11/09/2009; time 13:23:10
Cline Avenue - Load Rating - Double Box - 3 Webs - 48'-4" Wi

Summary of the results (Maximum)

Section	--- Deadload ----		----- P.T. ------		--- Live load ---	
	Moment	Ax.Frc	Moment	Ax.Frc	Moment	Ax.Frc
1 a	-0.18	0.02	0.00	0.00	0.03	-0.01
1 b	-2.51	0.28	0.00	0.00	0.70	-0.18
1 c	-6.42	0.94	0.00	0.00	4.59	-0.55
1 right	-7.58	1.16	0.00	0.00	5.51	-0.68
2 left	-4.40	1.39	0.00	0.00	6.10	0.18
2 a	-3.50	1.18	0.00	0.00	5.01	0.45
2 b	0.09	0.38	0.00	0.00	1.35	0.27
2 c	0.96	0.24	0.00	0.00	0.35	-0.14
2 right	-5.02	1.86	0.00	0.00	9.71	0.45
3 left	-5.02	1.86	0.00	0.00	9.71	0.45
3 a	-4.07	1.61	0.00	0.00	8.23	0.54
3 b	-0.19	0.59	0.00	0.00	1.49	0.45
3 c	0.96	0.24	0.00	0.00	0.35	-0.14
3 right	-4.40	1.39	0.00	0.00	6.10	0.18
4 left	-7.58	1.16	0.00	0.00	5.51	-0.68
4 a	-6.42	0.94	0.00	0.00	4.59	-0.55
4 b	-2.51	0.28	0.00	0.00	0.70	-0.18
4 c	-0.18	0.02	0.00	0.00	0.03	-0.01
5 a	-0.88	0.11	0.00	0.00	1.05	-0.45
5 b	1.78	2.52	0.00	0.00	0.09	-1.37
5 c	-1.83	1.84	0.00	0.00	1.32	-1.35
6 a	-1.83	1.84	0.00	0.00	1.32	-1.35
6 b	1.78	2.52	0.00	0.00	0.09	-1.37
6 c	-0.88	0.11	0.00	0.00	1.05	-0.45
7 top	-3.18	-3.33	0.00	0.00	4.66	2.37
7 a	-3.01	-2.94	0.00	0.00	4.14	2.08
7 b	-2.23	-0.98	0.00	0.00	1.58	1.07
8 top	0.00	-3.07	0.00	0.00	10.64	2.20
8 a	0.00	-2.60	0.00	0.00	9.30	1.97
8 b	0.00	-0.30	0.00	0.00	3.54	1.01
9 top	3.18	-3.33	0.00	0.00	5.40	1.95
9 a	3.01	-2.94	0.00	0.00	4.82	1.73
9 b	2.23	-0.98	0.00	0.00	2.46	0.84

VEH: S3 - SPECIAL TR BRUG(5.75.44) page 44
date 11/09/2009; time 13:23:10
Cline Avenue - Load Rating - Double Box - 3 Webs - 48'-4" Wi

Summary of the results (Minimum)

Section	--- Deadload ----		----- P.T. ------		--- Live load ---	
	Moment	Ax.Frc	Moment	Ax.Frc	Moment	Ax.Frc
1 a	-0.18	0.02	0.00	0.00	-0.03	-0.01
1 b	-2.51	0.28	0.00	0.00	-0.07	-0.13
1 c	-6.42	0.94	0.00	0.00	-0.07	-0.12
1 right	-7.58	1.16	0.00	0.00	-0.09	-0.15
2 left	-4.40	1.39	0.00	0.00	0.27	-1.14
2 a	-3.50	1.18	0.00	0.00	-0.49	-1.02
2 b	0.09	0.38	0.00	0.00	-2.44	0.01
2 c	0.96	0.24	0.00	0.00	-3.29	0.55
2 right	-5.02	1.86	0.00	0.00	-1.43	-1.31
3 left	-5.02	1.86	0.00	0.00	-1.12	-1.33
3 a	-4.07	1.61	0.00	0.00	-1.09	-1.21
3 b	-0.19	0.59	0.00	0.00	-1.97	-0.32
3 c	0.96	0.24	0.00	0.00	-3.29	0.55
3 right	-4.40	1.39	0.00	0.00	0.27	-1.14
4 left	-7.58	1.16	0.00	0.00	-0.09	-0.15
4 a	-6.42	0.94	0.00	0.00	-0.07	-0.12
4 b	-2.51	0.28	0.00	0.00	-0.07	-0.13
4 c	-0.18	0.02	0.00	0.00	-0.03	-0.01
5 a	-0.88	0.11	0.00	0.00	-1.17	0.06
5 b	1.78	2.52	0.00	0.00	-0.05	-0.52
5 c	-1.83	1.84	0.00	0.00	-1.20	0.43
6 a	-1.83	1.84	0.00	0.00	-1.20	0.43
6 b	1.78	2.52	0.00	0.00	-0.05	-0.52
6 c	-0.88	0.11	0.00	0.00	-1.17	0.06
7 top	-3.18	-3.33	0.00	0.00	-5.40	1.95
7 a	-3.01	-2.94	0.00	0.00	-4.82	1.73
7 b	-2.23	-0.98	0.00	0.00	-2.46	0.84
8 top	0.00	-3.07	0.00	0.00	-10.64	2.20
8 a	0.00	-2.60	0.00	0.00	-9.30	1.97
8 b	0.00	-0.30	0.00	0.00	-3.54	1.01
9 top	3.18	-3.33	0.00	0.00	-4.66	2.37
9 a	3.01	-2.94	0.00	0.00	-4.14	2.08
9 b	2.23	-0.98	0.00	0.00	-1.58	1.07

VEH: S4 - SUPER LOAD BRUG(5.75.44) page 43
date 11/09/2009; time 13:23:11
Cline Avenue - Load Rating - Double Box - 3 Webs - 48'-4" Wi

Summary of the results (Maximum)

Section	--- Deadload ----		----- P.T. ------		--- Live load ---	
	Moment	Ax.Frc	Moment	Ax.Frc	Moment	Ax.Frc
1 a	-0.18	0.02	0.00	0.00	0.08	0.00
1 b	-2.51	0.28	0.00	0.00	0.68	-0.07
1 c	-6.42	0.94	0.00	0.00	1.49	-0.12
1 right	-7.58	1.16	0.00	0.00	1.61	-0.06
2 left	-4.40	1.39	0.00	0.00	2.35	0.22
2 a	-3.50	1.18	0.00	0.00	2.07	0.22
2 b	0.09	0.38	0.00	0.00	0.67	0.12
2 c	0.96	0.24	0.00	0.00	0.17	-0.06
2 right	-5.02	1.86	0.00	0.00	3.97	0.29
3 left	-5.02	1.86	0.00	0.00	3.97	0.29
3 a	-4.07	1.61	0.00	0.00	3.63	0.26
3 b	-0.19	0.59	0.00	0.00	0.77	0.26
3 c	0.96	0.24	0.00	0.00	0.17	-0.06
3 right	-4.40	1.39	0.00	0.00	2.35	0.22
4 left	-7.58	1.16	0.00	0.00	1.56	0.01
4 a	-6.42	0.94	0.00	0.00	1.46	-0.12
4 b	-2.51	0.28	0.00	0.00	0.68	-0.07
4 c	-0.18	0.02	0.00	0.00	0.08	0.00
5 a	-0.88	0.11	0.00	0.00	0.56	-0.24
5 b	1.78	2.52	0.00	0.00	0.05	-0.60
5 c	-1.83	1.84	0.00	0.00	0.69	-0.70
6 a	-1.83	1.84	0.00	0.00	0.69	-0.70
6 b	1.78	2.52	0.00	0.00	0.05	-0.60
6 c	-0.88	0.11	0.00	0.00	0.56	-0.24
7 top	-3.18	-3.33	0.00	0.00	2.40	-0.50
7 a	-3.01	-2.94	0.00	0.00	2.08	-0.24
7 b	-2.23	-0.98	0.00	0.00	0.79	0.25
8 top	0.00	-3.07	0.00	0.00	4.89	0.33
8 a	0.00	-2.60	0.00	0.00	4.38	0.23
8 b	0.00	-0.30	0.00	0.00	1.70	0.30
9 top	3.18	-3.33	0.00	0.00	2.33	0.35
9 a	3.01	-2.94	0.00	0.00	2.10	0.32
9 b	2.23	-0.98	0.00	0.00	1.12	0.24

VEH: S4 - SUPER LOAD BRUG(5.75.44) page 44
date 11/09/2009; time 13:23:11
Cline Avenue - Load Rating - Double Box - 3 Webs - 48'-4" Wi

Summary of the results (Minimum)

Section	--- Deadload ----		----- P.T. ------		--- Live load ---	
	Moment	Ax.Frc	Moment	Ax.Frc	Moment	Ax.Frc
1 a	-0.18	0.02	0.00	0.00	-0.01	0.00
1 b	-2.51	0.28	0.00	0.00	0.00	-0.02
1 c	-6.42	0.94	0.00	0.00	-0.07	-0.05
1 right	-7.58	1.16	0.00	0.00	-0.17	0.02
2 left	-4.40	1.39	0.00	0.00	-0.84	-0.39
2 a	-3.50	1.18	0.00	0.00	-0.43	-0.43
2 b	0.09	0.38	0.00	0.00	-0.71	0.03
2 c	0.96	0.24	0.00	0.00	-0.65	0.19
2 right	-5.02	1.86	0.00	0.00	-1.19	-0.45
3 left	-5.02	1.86	0.00	0.00	-1.15	-0.44
3 a	-4.07	1.61	0.00	0.00	-0.81	-0.45
3 b	-0.19	0.59	0.00	0.00	-0.45	-0.09
3 c	0.96	0.24	0.00	0.00	-0.65	0.19
3 right	-4.40	1.39	0.00	0.00	-0.84	-0.39
4 left	-7.58	1.16	0.00	0.00	-0.17	0.02
4 a	-6.42	0.94	0.00	0.00	-0.07	-0.05
4 b	-2.51	0.28	0.00	0.00	0.00	-0.02
4 c	-0.18	0.02	0.00	0.00	-0.01	0.00
5 a	-0.88	0.11	0.00	0.00	-0.63	0.10
5 b	1.78	2.52	0.00	0.00	-0.03	-0.23
5 c	-1.83	1.84	0.00	0.00	-0.62	0.12
6 a	-1.83	1.84	0.00	0.00	-0.62	0.12
6 b	1.78	2.52	0.00	0.00	-0.03	-0.23
6 c	-0.88	0.11	0.00	0.00	-0.63	0.10
7 top	-3.18	-3.33	0.00	0.00	-2.33	0.35
7 a	-3.01	-2.94	0.00	0.00	-2.10	0.32
7 b	-2.23	-0.98	0.00	0.00	-1.12	0.24
8 top	0.00	-3.07	0.00	0.00	-4.89	0.33
8 a	0.00	-2.60	0.00	0.00	-4.38	0.23
8 b	0.00	-0.30	0.00	0.00	-1.70	0.30
9 top	3.18	-3.33	0.00	0.00	-2.40	-0.50
9 a	3.01	-2.94	0.00	0.00	-2.08	-0.24
9 b	2.23	-0.98	0.00	0.00	-0.79	0.25

VEH: S5 - SUPERLOAD BRUG(5.75.44) page 43
date 11/09/2009; time 13:23:11
Cline Avenue - Load Rating - Double Box - 3 Webs - 48'-4" Wi

Summary of the results (Maximum)

Section	--- Deadload ----		----- P.T. ------		--- Live load ---	
	Moment	Ax.Frc	Moment	Ax.Frc	Moment	Ax.Frc
1 a	-0.18	0.02	0.00	0.00	0.24	0.01
1 b	-2.51	0.28	0.00	0.00	1.17	0.15
1 c	-6.42	0.94	0.00	0.00	0.10	0.07
1 right	-7.58	1.16	0.00	0.00	0.13	0.09
2 left	-4.40	1.39	0.00	0.00	-0.90	-0.13
2 a	-3.50	1.18	0.00	0.00	-0.84	-0.13
2 b	0.09	0.38	0.00	0.00	3.61	0.14
2 c	0.96	0.24	0.00	0.00	5.94	-0.65
2 right	-5.02	1.86	0.00	0.00	0.63	0.23
3 left	-5.02	1.86	0.00	0.00	0.63	0.23
3 a	-4.07	1.61	0.00	0.00	0.60	0.19
3 b	-0.19	0.59	0.00	0.00	3.40	0.27
3 c	0.96	0.24	0.00	0.00	5.94	-0.65
3 right	-4.40	1.39	0.00	0.00	-0.90	-0.13
4 left	-7.58	1.16	0.00	0.00	0.13	0.09
4 a	-6.42	0.94	0.00	0.00	0.10	0.07
4 b	-2.51	0.28	0.00	0.00	1.16	0.14
4 c	-0.18	0.02	0.00	0.00	0.24	0.01
5 a	-0.88	0.11	0.00	0.00	0.90	0.21
5 b	1.78	2.52	0.00	0.00	0.05	0.64
5 c	-1.83	1.84	0.00	0.00	1.02	-0.54
6 a	-1.83	1.84	0.00	0.00	1.02	-0.54
6 b	1.78	2.52	0.00	0.00	0.05	0.64
6 c	-0.88	0.11	0.00	0.00	0.90	0.21
7 top	-3.18	-3.33	0.00	0.00	7.59	-4.27
7 a	-3.01	-2.94	0.00	0.00	6.40	-3.72
7 b	-2.23	-0.98	0.00	0.00	2.76	-1.53
8 top	0.00	-3.07	0.00	0.00	11.45	-4.52
8 a	0.00	-2.60	0.00	0.00	9.69	-4.53
8 b	0.00	-0.30	0.00	0.00	3.50	-1.96
9 top	3.18	-3.33	0.00	0.00	4.51	-7.26
9 a	3.01	-2.94	0.00	0.00	3.98	-6.16
9 b	2.23	-0.98	0.00	0.00	1.49	-2.42

VEH: S5 - SUPERLOAD BRUG(5.75.44) page 44
date 11/09/2009; time 13:23:11
Cline Avenue - Load Rating - Double Box - 3 Webs - 48'-4" Wi

Summary of the results (Minimum)

Section	--- Deadload ----		----- P.T. ------		--- Live load ---	
	Moment	Ax.Frc	Moment	Ax.Frc	Moment	Ax.Frc
1 a	-0.18	0.02	0.00	0.00	-0.05	0.01
1 b	-2.51	0.28	0.00	0.00	-0.39	0.21
1 c	-6.42	0.94	0.00	0.00	-7.76	1.06
1 right	-7.58	1.16	0.00	0.00	-10.08	1.51
2 left	-4.40	1.39	0.00	0.00	-11.08	1.45
2 a	-3.50	1.18	0.00	0.00	-8.46	0.65
2 b	0.09	0.38	0.00	0.00	-1.80	-0.49
2 c	0.96	0.24	0.00	0.00	-0.34	0.13
2 right	-5.02	1.86	0.00	0.00	-13.54	0.85
3 left	-5.02	1.86	0.00	0.00	-13.54	0.85
3 a	-4.07	1.61	0.00	0.00	-10.71	0.48
3 b	-0.19	0.59	0.00	0.00	-2.03	-0.60
3 c	0.96	0.24	0.00	0.00	-0.34	0.13
3 right	-4.40	1.39	0.00	0.00	-11.08	1.45
4 left	-7.58	1.16	0.00	0.00	-10.08	1.51
4 a	-6.42	0.94	0.00	0.00	-7.76	1.06
4 b	-2.51	0.28	0.00	0.00	-0.39	0.21
4 c	-0.18	0.02	0.00	0.00	-0.05	0.01
5 a	-0.88	0.11	0.00	0.00	-0.83	0.33
5 b	1.78	2.52	0.00	0.00	-0.09	1.54
5 c	-1.83	1.84	0.00	0.00	-1.09	1.34
6 a	-1.83	1.84	0.00	0.00	-1.09	1.34
6 b	1.78	2.52	0.00	0.00	-0.09	1.54
6 c	-0.88	0.11	0.00	0.00	-0.83	0.33
7 top	-3.18	-3.33	0.00	0.00	-4.51	-7.26
7 a	-3.01	-2.94	0.00	0.00	-3.98	-6.16
7 b	-2.23	-0.98	0.00	0.00	-1.49	-2.42
8 top	0.00	-3.07	0.00	0.00	-11.45	-4.52
8 a	0.00	-2.60	0.00	0.00	-9.69	-4.53
8 b	0.00	-0.30	0.00	0.00	-3.50	-1.96
9 top	3.18	-3.33	0.00	0.00	-7.59	-4.27
9 a	3.01	-2.94	0.00	0.00	-6.40	-3.72
9 b	2.23	-0.98	0.00	0.00	-2.76	-1.53

4.4.4 Brug Input Striped Lanes

```
1II_A_SL_HL93_truck_EL.txt                                                    9/11/2009

* start ; column 11-30 can be used to have your own text on the top of each page
*   5   10   15   20   25   30   35   40   45   50   55   60   65   70   75   80
*   V    V    V    V    V    V    V    V    V    V    V    V    V    V    V    V
00001  1 1     VEH: HL93- TRUCK - Single Vehicle
* code 1001
Cline Avenue - STRIPED LANES - Double Box - 3 Webs - 48'-4" Wide
* code 1002
    2         1
* code 1003
*   5   10   15   20   25   30   35   40   45   50   55   60   65   70   75   80
*   V    V    V    V    V    V    V    V    V    V    V    V    V    V    V    V
250.0      102.0      48.33    1.0       1.0       1.3
* code 1004
    1    0    2
* code 1005
   72    1
* code 1005a
* location traffic lanes
10.167
* maximum and minimum truck
7.917     36.417    10.000
* code 1007, linear loads
0.7350    0.441
47.5983   0.441
* code 1201
    8    5    4    2    3
* code 1202 coordinates
 0.0000   8.2500
 7.3125   8.2500
 7.3125   0.3333
24.1667   8.2500
24.1667   0.3333
41.0208   8.2500
41.0208   0.3333
48.3333   8.2500
* code 1203 - profile 1
    5    2    3    4
0.000     0.750
1.000     0.750
3.833     1.125
6.667     1.500
7.313     1.500
* code 1203 - profile 2
    7    2    3    4
0.000     1.500
0.646     1.500
4.646     0.750
8.427     0.750
12.208    0.750
16.208    1.500
16.854    1.500
* code 1203 - profile 3
    5    2    3    4
0.000     1.500
0.646     1.500
3.479     1.125
6.313     0.750
7.313     0.750
* code 1203 - profile 4
    5    2    3    4
0.000     0.667
0.646     0.667
8.427     0.667
16.208    0.667
16.854    0.667
* code 1203 - profile 5
    5    2    3    4
0.000     1.292
0.750     1.292
4.167     1.292
7.583     1.292
7.917     1.292
* code 1204 - assembling boxgirder
    1    2    1
    2    4    2
    4    6    2
    6    8    3
    3    5    4
    5    7    4
    2    3    5
    4    5    5
```

1II_A_SL_HL93_truck_EL.txt 9/11/2009

```
    6    7    5
* code 1205 control code
    1    2   13    1    1    0    4    3     1.0       1.0
* code 1206 wheels/axle
       0.0
       1.5
       6.0
       7.5 0.833
* code 1207 definition axles
0.0       0.1
14.0      0.4
28.0      0.4
* code 1208 - accuracy
0.00001   0.00001   0.00001   .00001    .00001
* code 1209 number sections
   33
   1A   1B   1C   1R   2L   2A   2B   2C   2R   3L   3A   3B   3C   3R
   4L   4A   4B   4C   5A   5B   5C   6A   6B   6C
   7L   7A   7B   8L   8A   8B   9L   9A   9B
* code 1210 - density conrete
0.156
* code 1211 - extra forces selfweight

* code 1212 - surcharge
1.2083
* code 1213 - Prestressing Layout - NONE
```

1II_A_SL_HL93_tandem_EL.txt 9/11/2009

```
* start ; column 11-30 can be used to have your own text on the top of each page
*   5   10   15   20   25   30   35   40   45   50   55   60   65   70   75   80
*   V    V    V    V    V    V    V    V    V    V    V    V    V    V    V    V
00001  1 1     VEH: HL93- TANDEM - SINGLE TRUCK
* code 1001
Cline Avenue - STRIPED LANES - Double Box - 3 Webs - 48'-4" Wide
* code 1002
    2         1
* code 1003
*   5   10   15   20   25   30   35   40   45   50   55   60   65   70   75   80
*   V    V    V    V    V    V    V    V    V    V    V    V    V    V    V    V
250.0      102.0      48.33    1.0       1.0       1.3
* code 1004
    1    0    2
* code 1005
   50    1
* code 1005a
* location traffic lanes
10.167
* maximum and minimum truck
7.917     36.417    10.000
* code 1007, linear loads
0.7350    0.441
47.5983   0.441
* code 1201
    8    5    4    2    3
* code 1202 coordinates
 0.0000   8.2500
 7.3125   8.2500
 7.3125   0.3333
24.1667   8.2500
24.1667   0.3333
41.0208   8.2500
41.0208   0.3333
48.3333   8.2500
* code 1203 - profile 1
    5    2    3    4
0.000     0.750
1.000     0.750
3.833     1.125
6.667     1.500
7.313     1.500
* code 1203 - profile 2
    7    2    3    4
0.000     1.500
0.646     1.500
4.646     0.750
8.427     0.750
12.208    0.750
16.208    1.500
16.854    1.500
* code 1203 - profile 3
    5    2    3    4
0.000     1.500
0.646     1.500
3.479     1.125
6.313     0.750
7.313     0.750
* code 1203 - profile 4
    5    2    3    4
0.000     0.667
0.646     0.667
8.427     0.667
16.208    0.667
16.854    0.667
* code 1203 - profile 5
    5    2    3    4
0.000     1.292
0.750     1.292
4.167     1.292
7.583     1.292
7.917     1.292
* code 1204 - assembling boxgirder
    1    2    1
    2    4    2
    4    6    2
    6    8    3
    3    5    4
    5    7    4
    2    3    5
    4    5    5
```

1II_A_SL_HL93_tandem_EL.txt 9/11/2009

```
    6    7    5
* code 1205 control code
    1    2   13    1    1    0    4    2     1.0       1.0
* code 1206 wheels/axle
       0.0
       1.5
       6.0
       7.5 0.833
* code 1207 definition axles
0.0       0.5
4.0       0.5
* code 1208 - accuracy
0.00001   0.00001   0.00001   .00001    .00001
* code 1209 number sections
   33
   1A   1B   1C   1R   2L   2A   2B   2C   2R   3L   3A   3B   3C   3R
   4L   4A   4B   4C   5A   5B   5C   6A   6B   6C
   7L   7A   7B   8L   8A   8B   9L   9A   9B
* code 1210 - density conrete
0.156
* code 1211 - extra forces selfweight

* code 1212 - surcharge
1.2083
* code 1213 - Prestressing Layout - NONE
```

```
* start ; column 11-30 can be used to have your own text on the top of each page
*   5   10   15   20   25   30   35   40   45   50   55   60   65   70   75   80
*   V    V    V    V    V    V    V    V    V    V    V    V    V    V    V    V
00001  1 1     VEH: HL93- TRUCK
* code 1001
Cline Avenue - STRIPED LANE - Double Box - 3 Webs - 48'-4" Wide
* code 1002
    2         1
* code 1003
*   5   10   15   20   25   30   35   40   45   50   55   60   65   70   75   80
*   V    V    V    V    V    V    V    V    V    V    V    V    V    V    V    V
250.0      102.0      48.33    1.0       1.0       1.3
* code 1004
    2    0    2
* code 1005
   72
* code 1005a
* location traffic lanes
10.167    22.167
* maximum and minimum truck
7.917     36.417    10.000
* code 1007, linear loads
0.7350    0.441
47.5983   0.441
* code 1201
    8    5    4    2    3
* code 1202 coordinates
 0.0000   8.2500
 7.3125   8.2500
 7.3125   0.3333
24.1667   8.2500
24.1667   0.3333
41.0208   8.2500
41.0208   0.3333
48.3333   8.2500
* code 1203 - profile 1
    5    2    3    4
0.000     0.750
1.000     0.750
3.833     1.125
6.667     1.500
7.313     1.500
* code 1203 - profile 2
    7    2    3    4
0.000     1.500
0.646     1.500
4.646     0.750
8.427     0.750
12.208    0.750
16.208    1.500
16.854    1.500
* code 1203 - profile 3
    5    2    3    4
0.000     1.500
0.646     1.500
3.479     1.125
6.313     0.750
7.313     0.750
* code 1203 - profile 4
    5    2    3    4
0.000     0.667
0.646     0.667
8.427     0.667
16.208    0.667
16.854    0.667
* code 1203 - profile 5
    5    2    3    4
0.000     1.292
0.750     1.292
4.167     1.292
7.583     1.292
7.917     1.292
* code 1204 - assembling boxgirder
    1    2    1
    2    4    2
    4    6    2
    6    8    3
    3    5    4
    5    7    4
    2    3    5
    4    5    5
```

```
    6    7    5
* code 1205 control code
    1    2   13    1    1    0    4    3     1.0       1.0
* code 1206 wheels/axle
       0.0
       1.5
       6.0
       7.5 0.833
* code 1207 definition axles
0.0       0.1
14.0      0.4
28.0      0.4
* code 1208 - accuracy
0.00001   0.00001   0.00001   .00001    .00001
* code 1209 number sections
   33
   1A   1B   1C   1R   2L   2A   2B   2C   2R   3L   3A   3B   3C   3R
   4L   4A   4B   4C   5A   5B   5C   6A   6B   6C
   7L   7A   7B   8L   8A   8B   9L   9A   9B
* code 1210 - density conrete
0.156
* code 1211 - extra forces selfweight

* code 1212 - surcharge
1.2083
* code 1213 - Prestressing Layout - NONE
```

```
* start ; column 11-30 can be used to have your own text on the top of each page
*   5   10   15   20   25   30   35   40   45   50   55   60   65   70   75   80
*   V    V    V    V    V    V    V    V    V    V    V    V    V    V    V    V
00001  1 1     VEH: HL93- TANDEM
* code 1001
Cline Avenue - STRIPED LANE - Double Box - 3 Webs - 48'-4" Wide
* code 1002
    2         1
* code 1003
*   5   10   15   20   25   30   35   40   45   50   55   60   65   70   75   80
*   V    V    V    V    V    V    V    V    V    V    V    V    V    V    V    V
250.0      102.0      48.33    1.0       1.0       1.3
* code 1004
    2    0    2
* code 1005
   50
* code 1005a
* location traffic lanes
10.167    22.167
* maximum and minimum truck
7.917     36.417    10.000
* code 1007, linear loads
0.7350    0.441
47.5983   0.441
* code 1201
    8    5    4    2    3
* code 1202 coordinates
 0.0000   8.2500
 7.3125   8.2500
 7.3125   0.3333
24.1667   8.2500
24.1667   0.3333
41.0208   8.2500
41.0208   0.3333
48.3333   8.2500
* code 1203 - profile 1
    5    2    3    4
0.000     0.750
1.000     0.750
3.833     1.125
6.667     1.500
7.313     1.500
* code 1203 - profile 2
    7    2    3    4
0.000     1.500
0.646     1.500
4.646     0.750
8.427     0.750
12.208    0.750
16.208    1.500
16.854    1.500
* code 1203 - profile 3
    5    2    3    4
0.000     1.500
0.646     1.500
3.479     1.125
6.313     0.750
7.313     0.750
* code 1203 - profile 4
    5    2    3    4
0.000     0.667
0.646     0.667
8.427     0.667
16.208    0.667
16.854    0.667
* code 1203 - profile 5
    5    2    3    4
0.000     1.292
0.750     1.292
4.167     1.292
7.583     1.292
7.917     1.292
* code 1204 - assembling boxgirder
    1    2    1
    2    4    2
    4    6    2
    6    8    3
    3    5    4
    5    7    4
    2    3    5
    4    5    5
```

```
    6    7    5
* code 1205 control code
    1    2   13    1    1    0    4    2     1.0       1.0
* code 1206 wheels/axle
       0.0
       1.5
       6.0
       7.5 0.833
* code 1207 definition axles
0.0       0.5
4.0       0.5
* code 1208 - accuracy
0.00001   0.00001   0.00001   .00001    .00001
* code 1209 number sections
   33
   1A   1B   1C   1R   2L   2A   2B   2C   2R   3L   3A   3B   3C   3R
   4L   4A   4B   4C   5A   5B   5C   6A   6B   6C
   7L   7A   7B   8L   8A   8B   9L   9A   9B
* code 1210 - density conrete
0.156
* code 1211 - extra forces selfweight

* code 1212 - surcharge
1.2083
* code 1213 - Prestressing Layout - NONE
```

4.4.5 Brug Output Striped Lanes (Summary)

1II_A_SL_HL93_truck_EL.OUT 9/11/2009

VEH: HL93- TRUCK - S BRUG(5.75.44) page 43
date 11/09/2009; time 14:41:56
Cline Avenue - STRIPED LANES - Double Box - 3 Webs - 48'-4"

Summary of the results (Maximum)

Section	--- Deadload ----		----- P.T. ------		--- Live load ---	
	Moment	Ax.Frc	Moment	Ax.Frc	Moment	Ax.Frc
1 a	-0.18	0.02	0.00	0.00	0.00	0.00
1 b	-2.51	0.28	0.00	0.00	1.32	0.07
1 c	-6.42	0.94	0.00	0.00	0.04	0.05
1 right	-7.58	1.16	0.00	0.00	0.04	0.06
2 left	-4.40	1.39	0.00	0.00	-1.03	-0.16
2 a	-3.50	1.18	0.00	0.00	-0.96	-0.16
2 b	0.09	0.38	0.00	0.00	4.03	0.13
2 c	0.96	0.24	0.00	0.00	4.76	-0.54
2 right	-5.02	1.86	0.00	0.00	0.10	0.48
3 left	-5.02	1.86	0.00	0.00	0.80	0.28
3 a	-4.07	1.61	0.00	0.00	0.76	0.24
3 b	-0.19	0.59	0.00	0.00	3.40	0.24
3 c	0.96	0.24	0.00	0.00	4.76	-0.54
3 right	-4.40	1.39	0.00	0.00	-1.17	-0.17
4 left	-7.58	1.16	0.00	0.00	0.05	0.06
4 a	-6.42	0.94	0.00	0.00	0.04	0.05
4 b	-2.51	0.28	0.00	0.00	0.01	0.01
4 c	-0.18	0.02	0.00	0.00	0.00	0.00
5 a	-0.88	0.11	0.00	0.00	0.91	-0.29
5 b	1.78	2.52	0.00	0.00	0.03	0.28
5 c	-1.83	1.84	0.00	0.00	0.66	-0.07
6 a	-1.83	1.84	0.00	0.00	0.66	-0.07
6 b	1.78	2.52	0.00	0.00	0.04	0.06
6 c	-0.88	0.11	0.00	0.00	0.57	0.38
7 top	-3.18	-3.33	0.00	0.00	5.05	-4.12
7 a	-3.01	-2.94	0.00	0.00	3.82	-4.10
7 b	-2.23	-0.98	0.00	0.00	1.77	-1.47
8 top	0.00	-3.07	0.00	0.00	7.54	-3.07
8 a	0.00	-2.60	0.00	0.00	5.91	-4.30
8 b	0.00	-0.30	0.00	0.00	2.23	-1.63
9 top	3.18	-3.33	0.00	0.00	-1.19	-0.12
9 a	3.01	-2.94	0.00	0.00	-1.03	-0.11
9 b	2.23	-0.98	0.00	0.00	-0.28	-0.02

1II_A_SL_HL93_truck_EL.OUT 9/11/2009

VEH: HL93- TRUCK - S BRUG(5.75.44) page 44
date 11/09/2009; time 14:41:56
Cline Avenue - STRIPED LANES - Double Box - 3 Webs - 48'-4"

Summary of the results (Minimum)

Section	--- Deadload ----		----- P.T. ------		--- Live load ---	
	Moment	Ax.Frc	Moment	Ax.Frc	Moment	Ax.Frc
1 a	-0.18	0.02	0.00	0.00	-0.02	0.01
1 b	-2.51	0.28	0.00	0.00	-0.18	0.10
1 c	-6.42	0.94	0.00	0.00	-3.45	0.53
1 right	-7.58	1.16	0.00	0.00	-6.28	0.90
2 left	-4.40	1.39	0.00	0.00	-6.77	-0.02
2 a	-3.50	1.18	0.00	0.00	-5.51	-0.26
2 b	0.09	0.38	0.00	0.00	-1.43	-0.33
2 c	0.96	0.24	0.00	0.00	-0.23	0.03
2 right	-5.02	1.86	0.00	0.00	-8.69	0.01
3 left	-5.02	1.86	0.00	0.00	-8.69	0.01
3 a	-4.07	1.61	0.00	0.00	-7.30	-0.32
3 b	-0.19	0.59	0.00	0.00	-2.26	-0.58
3 c	0.96	0.24	0.00	0.00	-0.23	0.03
3 right	-4.40	1.39	0.00	0.00	-6.77	-0.02
4 left	-7.58	1.16	0.00	0.00	-1.71	0.72
4 a	-6.42	0.94	0.00	0.00	-1.11	0.49
4 b	-2.51	0.28	0.00	0.00	-0.18	0.10
4 c	-0.18	0.02	0.00	0.00	-0.02	0.01
5 a	-0.88	0.11	0.00	0.00	-0.55	0.23
5 b	1.78	2.52	0.00	0.00	-0.07	0.74
5 c	-1.83	1.84	0.00	0.00	-0.91	0.93
6 a	-1.83	1.84	0.00	0.00	-0.71	1.00
6 b	1.78	2.52	0.00	0.00	-0.07	0.74
6 c	-0.88	0.11	0.00	0.00	-0.55	0.21
7 top	-3.18	-3.33	0.00	0.00	-2.55	-7.98
7 a	-3.01	-2.94	0.00	0.00	-2.16	-6.67
7 b	-2.23	-0.98	0.00	0.00	-0.64	-2.33
8 top	0.00	-3.07	0.00	0.00	-7.54	-3.07
8 a	0.00	-2.60	0.00	0.00	-5.91	-4.30
8 b	0.00	-0.30	0.00	0.00	-2.23	-1.63
9 top	3.18	-3.33	0.00	0.00	-5.05	-4.12
9 a	3.01	-2.94	0.00	0.00	-3.82	-4.10
9 b	2.23	-0.98	0.00	0.00	-1.77	-1.47

VEH: HL93- TANDEM - BRUG(5.75.44) page 43
date 11/09/2009; time 14:41:56
Cline Avenue - STRIPED LANES - Double Box - 3 Webs - 48'-4"

Summary of the results (Maximum)

Section	--- Deadload ----		----- P.T. ------		--- Live load ---	
	Moment	Ax.Frc	Moment	Ax.Frc	Moment	Ax.Frc
1 a	-0.18	0.02	0.00	0.00	0.03	0.01
1 b	-2.51	0.28	0.00	0.00	0.90	0.14
1 c	-6.42	0.94	0.00	0.00	0.05	0.02
1 right	-7.58	1.16	0.00	0.00	0.07	0.03
2 left	-4.40	1.39	0.00	0.00	-0.63	-0.12
2 a	-3.50	1.18	0.00	0.00	-0.59	-0.12
2 b	0.09	0.38	0.00	0.00	3.39	0.12
2 c	0.96	0.24	0.00	0.00	4.53	-0.55
2 right	-5.02	1.86	0.00	0.00	-0.58	0.46
3 left	-5.02	1.86	0.00	0.00	0.41	0.19
3 a	-4.07	1.61	0.00	0.00	0.42	0.16
3 b	-0.19	0.59	0.00	0.00	2.96	0.21
3 c	0.96	0.24	0.00	0.00	4.53	-0.55
3 right	-4.40	1.39	0.00	0.00	-0.80	-0.13
4 left	-7.58	1.16	0.00	0.00	0.09	0.04
4 a	-6.42	0.94	0.00	0.00	0.06	0.04
4 b	-2.51	0.28	0.00	0.00	0.02	0.01
4 c	-0.18	0.02	0.00	0.00	0.00	0.00
5 a	-0.88	0.11	0.00	0.00	0.68	-0.14
5 b	1.78	2.52	0.00	0.00	0.02	0.22
5 c	-1.83	1.84	0.00	0.00	0.53	-0.12
6 a	-1.83	1.84	0.00	0.00	0.53	-0.12
6 b	1.78	2.52	0.00	0.00	0.03	0.01
6 c	-0.88	0.11	0.00	0.00	0.36	0.56
7 top	-3.18	-3.33	0.00	0.00	5.81	-4.01
7 a	-3.01	-2.94	0.00	0.00	4.81	-3.51
7 b	-2.23	-0.98	0.00	0.00	2.07	-1.47
8 top	0.00	-3.07	0.00	0.00	7.52	-4.20
8 a	0.00	-2.60	0.00	0.00	6.30	-3.71
8 b	0.00	-0.30	0.00	0.00	2.35	-1.69
9 top	3.18	-3.33	0.00	0.00	-0.83	-0.08
9 a	3.01	-2.94	0.00	0.00	-0.72	-0.07
9 b	2.23	-0.98	0.00	0.00	-0.01	0.04

VEH: HL93- TANDEM - BRUG(5.75.44) page 44
date 11/09/2009; time 14:41:56
Cline Avenue - STRIPED LANES - Double Box - 3 Webs - 48'-4"

Summary of the results (Minimum)

Section	--- Deadload ----		----- P.T. ------		--- Live load ---	
	Moment	Ax.Frc	Moment	Ax.Frc	Moment	Ax.Frc
1 a	-0.18	0.02	0.00	0.00	-0.04	0.01
1 b	-2.51	0.28	0.00	0.00	-0.33	0.14
1 c	-6.42	0.94	0.00	0.00	-3.99	0.65
1 right	-7.58	1.16	0.00	0.00	-6.49	0.94
2 left	-4.40	1.39	0.00	0.00	-8.05	0.00
2 a	-3.50	1.18	0.00	0.00	-6.55	-0.23
2 b	0.09	0.38	0.00	0.00	-1.40	-0.36
2 c	0.96	0.24	0.00	0.00	-0.17	-0.01
2 right	-5.02	1.86	0.00	0.00	-9.49	0.06
3 left	-5.02	1.86	0.00	0.00	-9.49	0.06
3 a	-4.07	1.61	0.00	0.00	-7.87	-0.25
3 b	-0.19	0.59	0.00	0.00	-2.00	-0.55
3 c	0.96	0.24	0.00	0.00	-0.21	0.18
3 right	-4.40	1.39	0.00	0.00	-8.05	0.00
4 left	-7.58	1.16	0.00	0.00	-2.24	0.78
4 a	-6.42	0.94	0.00	0.00	-1.61	0.58
4 b	-2.51	0.28	0.00	0.00	-0.33	0.14
4 c	-0.18	0.02	0.00	0.00	-0.04	0.01
5 a	-0.88	0.11	0.00	0.00	-0.41	0.14
5 b	1.78	2.52	0.00	0.00	-0.06	0.78
5 c	-1.83	1.84	0.00	0.00	-0.67	0.83
6 a	-1.83	1.84	0.00	0.00	-0.54	0.90
6 b	1.78	2.52	0.00	0.00	-0.06	0.78
6 c	-0.88	0.11	0.00	0.00	-0.41	0.14
7 top	-3.18	-3.33	0.00	0.00	-1.75	-6.94
7 a	-3.01	-2.94	0.00	0.00	-1.49	-5.97
7 b	-2.23	-0.98	0.00	0.00	-0.44	-2.44
8 top	0.00	-3.07	0.00	0.00	-7.52	-4.20
8 a	0.00	-2.60	0.00	0.00	-6.30	-3.71
8 b	0.00	-0.30	0.00	0.00	-2.35	-1.69
9 top	3.18	-3.33	0.00	0.00	-5.81	-4.01
9 a	3.01	-2.94	0.00	0.00	-4.81	-3.51
9 b	2.23	-0.98	0.00	0.00	-2.07	-1.47

VEH: HL93- TRUCK BRUG(5.75.44) page 43
date 11/09/2009; time 14:42:03
Cline Avenue - STRIPED LANE - Double Box - 3 Webs - 48'-4" W

Summary of the results (Maximum)

Section	--- Deadload ----		----- P.T. ------		--- Live load ---	
	Moment	Ax.Frc	Moment	Ax.Frc	Moment	Ax.Frc
1 a	-0.18	0.02	0.00	0.00	0.00	0.00
1 b	-2.51	0.28	0.00	0.00	1.33	0.08
1 c	-6.42	0.94	0.00	0.00	0.04	0.05
1 right	-7.58	1.16	0.00	0.00	0.05	0.06
2 left	-4.40	1.39	0.00	0.00	-1.03	-0.16
2 a	-3.50	1.18	0.00	0.00	-0.96	-0.16
2 b	0.09	0.38	0.00	0.00	4.03	0.13
2 c	0.96	0.24	0.00	0.00	5.89	-0.55
2 right	-5.02	1.86	0.00	0.00	0.10	0.48
3 left	-5.02	1.86	0.00	0.00	0.80	0.28
3 a	-4.07	1.61	0.00	0.00	1.13	1.54
3 b	-0.19	0.59	0.00	0.00	3.68	0.29
3 c	0.96	0.24	0.00	0.00	5.89	-0.55
3 right	-4.40	1.39	0.00	0.00	-1.17	-0.17
4 left	-7.58	1.16	0.00	0.00	0.07	0.14
4 a	-6.42	0.94	0.00	0.00	0.05	0.11
4 b	-2.51	0.28	0.00	0.00	0.01	0.03
4 c	-0.18	0.02	0.00	0.00	0.00	0.00
5 a	-0.88	0.11	0.00	0.00	0.92	0.26
5 b	1.78	2.52	0.00	0.00	0.04	0.32
5 c	-1.83	1.84	0.00	0.00	1.10	-0.58
6 a	-1.83	1.84	0.00	0.00	1.15	-0.40
6 b	1.78	2.52	0.00	0.00	0.05	0.39
6 c	-0.88	0.11	0.00	0.00	0.57	0.38
7 top	-3.18	-3.33	0.00	0.00	6.71	-4.42
7 a	-3.01	-2.94	0.00	0.00	5.46	-4.42
7 b	-2.23	-0.98	0.00	0.00	2.43	-1.58
8 top	0.00	-3.07	0.00	0.00	9.33	-9.74
8 a	0.00	-2.60	0.00	0.00	8.04	-8.12
8 b	0.00	-0.30	0.00	0.00	3.01	-2.91
9 top	3.18	-3.33	0.00	0.00	-1.19	-0.12
9 a	3.01	-2.94	0.00	0.00	-1.03	-0.11
9 b	2.23	-0.98	0.00	0.00	-0.09	0.02

VEH: HL93- TRUCK BRUG(5.75.44) page 44
date 11/09/2009; time 14:42:03
Cline Avenue - STRIPED LANE - Double Box - 3 Webs - 48'-4" W

Summary of the results (Minimum)

Section	--- Deadload ----		----- P.T. ------		--- Live load ---	
	Moment	Ax.Frc	Moment	Ax.Frc	Moment	Ax.Frc
1 a	-0.18	0.02	0.00	0.00	-0.02	0.01
1 b	-2.51	0.28	0.00	0.00	-0.20	0.13
1 c	-6.42	0.94	0.00	0.00	-4.11	0.80
1 right	-7.58	1.16	0.00	0.00	-7.25	1.25
2 left	-4.40	1.39	0.00	0.00	-9.06	1.15
2 a	-3.50	1.18	0.00	0.00	-6.68	-0.35
2 b	0.09	0.38	0.00	0.00	-2.00	-0.44
2 c	0.96	0.24	0.00	0.00	-0.25	0.18
2 right	-5.02	1.86	0.00	0.00	-12.19	0.85
3 left	-5.02	1.86	0.00	0.00	-12.19	0.85
3 a	-4.07	1.61	0.00	0.00	-9.50	0.39
3 b	-0.19	0.59	0.00	0.00	-2.26	-0.58
3 c	0.96	0.24	0.00	0.00	-0.34	0.12
3 right	-4.40	1.39	0.00	0.00	-8.54	-0.15
4 left	-7.58	1.16	0.00	0.00	-1.91	1.20
4 a	-6.42	0.94	0.00	0.00	-1.26	0.77
4 b	-2.51	0.28	0.00	0.00	-0.21	0.14
4 c	-0.18	0.02	0.00	0.00	-0.02	0.01
5 a	-0.88	0.11	0.00	0.00	-0.97	0.43
5 b	1.78	2.52	0.00	0.00	-0.10	1.32
5 c	-1.83	1.84	0.00	0.00	-1.11	1.33
6 a	-1.83	1.84	0.00	0.00	-0.71	1.00
6 b	1.78	2.52	0.00	0.00	-0.10	1.32
6 c	-0.88	0.11	0.00	0.00	-1.00	0.42
7 top	-3.18	-3.33	0.00	0.00	-2.55	-7.98
7 a	-3.01	-2.94	0.00	0.00	-2.16	-6.67
7 b	-2.23	-0.98	0.00	0.00	-0.64	-2.33
8 top	0.00	-3.07	0.00	0.00	-11.56	-5.40
8 a	0.00	-2.60	0.00	0.00	-9.63	-4.66
8 b	0.00	-0.30	0.00	0.00	-3.39	-1.77
9 top	3.18	-3.33	0.00	0.00	-6.71	-4.42
9 a	3.01	-2.94	0.00	0.00	-5.46	-4.42
9 b	2.23	-0.98	0.00	0.00	-2.43	-1.58

II_A_SL_HL93_tandem_EL.OUT 9/11/2009

VEH: HL93- TANDEM BRUG(5.75.44) page 43
date 11/09/2009; time 14:42:03
Cline Avenue - STRIPED LANE - Double Box - 3 Webs - 48'-4" W

Summary of the results (Maximum)

Section	--- Deadload ----		----- P.T. ------		--- Live load ---	
	Moment	Ax.Frc	Moment	Ax.Frc	Moment	Ax.Frc
1 a	-0.18	0.02	0.00	0.00	0.03	0.01
1 b	-2.51	0.28	0.00	0.00	0.92	0.15
1 c	-6.42	0.94	0.00	0.00	0.06	0.04
1 right	-7.58	1.16	0.00	0.00	0.09	0.04
2 left	-4.40	1.39	0.00	0.00	-0.63	-0.12
2 a	-3.50	1.18	0.00	0.00	-0.59	-0.12
2 b	0.09	0.38	0.00	0.00	3.39	0.12
2 c	0.96	0.24	0.00	0.00	5.65	-0.60
2 right	-5.02	1.86	0.00	0.00	-0.58	0.46
3 left	-5.02	1.86	0.00	0.00	0.41	0.19
3 a	-4.07	1.61	0.00	0.00	0.42	0.16
3 b	-0.19	0.59	0.00	0.00	3.17	0.22
3 c	0.96	0.24	0.00	0.00	5.65	-0.60
3 right	-4.40	1.39	0.00	0.00	-0.80	-0.13
4 left	-7.58	1.16	0.00	0.00	0.11	0.08
4 a	-6.42	0.94	0.00	0.00	0.09	0.06
4 b	-2.51	0.28	0.00	0.00	0.02	0.02
4 c	-0.18	0.02	0.00	0.00	0.00	0.00
5 a	-0.88	0.11	0.00	0.00	0.68	-0.14
5 b	1.78	2.52	0.00	0.00	0.04	0.23
5 c	-1.83	1.84	0.00	0.00	0.89	-0.73
6 a	-1.83	1.84	0.00	0.00	0.92	-0.50
6 b	1.78	2.52	0.00	0.00	0.04	0.29
6 c	-0.88	0.11	0.00	0.00	0.36	0.56
7 top	-3.18	-3.33	0.00	0.00	7.25	-4.32
7 a	-3.01	-2.94	0.00	0.00	6.05	-3.79
7 b	-2.23	-0.98	0.00	0.00	2.54	-1.57
8 top	0.00	-3.07	0.00	0.00	9.21	-8.59
8 a	0.00	-2.60	0.00	0.00	7.81	-7.37
8 b	0.00	-0.30	0.00	0.00	2.87	-3.14
9 top	3.18	-3.33	0.00	0.00	-0.83	-0.08
9 a	3.01	-2.94	0.00	0.00	-0.72	-0.07
9 b	2.23	-0.98	0.00	0.00	-0.01	0.04

II_A_SL_HL93_tandem_EL.OUT 9/11/2009

VEH: HL93- TANDEM BRUG(5.75.44) page 44
date 11/09/2009; time 14:42:03
Cline Avenue - STRIPED LANE - Double Box - 3 Webs - 48'-4" W

Summary of the results (Minimum)

Section	--- Deadload ----		----- P.T. ------		--- Live load ---	
	Moment	Ax.Frc	Moment	Ax.Frc	Moment	Ax.Frc
1 a	-0.18	0.02	0.00	0.00	-0.04	0.01
1 b	-2.51	0.28	0.00	0.00	-0.37	0.17
1 c	-6.42	0.94	0.00	0.00	-5.07	0.97
1 right	-7.58	1.16	0.00	0.00	-7.98	1.36
2 left	-4.40	1.39	0.00	0.00	-11.01	1.03
2 a	-3.50	1.18	0.00	0.00	-8.47	0.62
2 b	0.09	0.38	0.00	0.00	-1.75	-0.44
2 c	0.96	0.24	0.00	0.00	-0.21	0.18
2 right	-5.02	1.86	0.00	0.00	-13.20	0.82
3 left	-5.02	1.86	0.00	0.00	-13.20	0.82
3 a	-4.07	1.61	0.00	0.00	-10.59	0.45
3 b	-0.19	0.59	0.00	0.00	-2.00	-0.55
3 c	0.96	0.24	0.00	0.00	-0.30	0.12
3 right	-4.40	1.39	0.00	0.00	-9.70	-0.13
4 left	-7.58	1.16	0.00	0.00	-2.50	1.18
4 a	-6.42	0.94	0.00	0.00	-1.81	0.83
4 b	-2.51	0.28	0.00	0.00	-0.38	0.19
4 c	-0.18	0.02	0.00	0.00	-0.04	0.01
5 a	-0.88	0.11	0.00	0.00	-0.72	0.31
5 b	1.78	2.52	0.00	0.00	-0.09	1.41
5 c	-1.83	1.84	0.00	0.00	-0.87	1.15
6 a	-1.83	1.84	0.00	0.00	-0.54	0.90
6 b	1.78	2.52	0.00	0.00	-0.09	1.42
6 c	-0.88	0.11	0.00	0.00	-0.74	0.29
7 top	-3.18	-3.33	0.00	0.00	-1.75	-6.94
7 a	-3.01	-2.94	0.00	0.00	-1.49	-5.97
7 b	-2.23	-0.98	0.00	0.00	-0.44	-2.44
8 top	0.00	-3.07	0.00	0.00	-10.63	-5.10
8 a	0.00	-2.60	0.00	0.00	-8.97	-4.46
8 b	0.00	-0.30	0.00	0.00	-3.18	-1.97
9 top	3.18	-3.33	0.00	0.00	-7.25	-4.32
9 a	3.01	-2.94	0.00	0.00	-6.05	-3.79
9 b	2.23	-0.98	0.00	0.00	-2.54	-1.57

4.5 3D Analysis Section IIB

case IIB Two adjacent boxes (3 webs) (constant width)

Mainline

Worst case occurs at longest span, segment 3 EBL between Piers 13 and 14 (315.604' span length).

4.5.1 Brug Model

BRUG SECTIONS

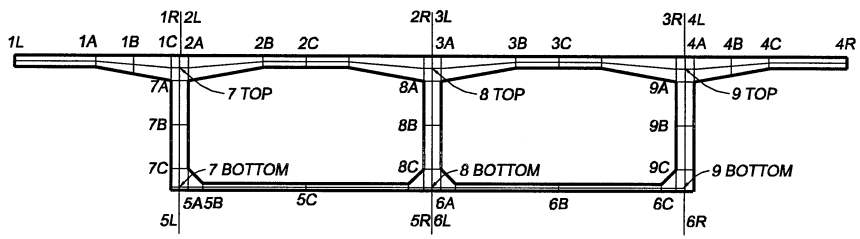

Valm
01/15/09

4.5/1

HALF SIZE PRINT - 11x17	Designed by		URS Corporation Southern 7650 Corporate Center Drive Suite 400 Miami, FL 33126-1220 Tel: (305) 262-7466 C.A. No. EB 00000002	TYPICAL SECTION - Transverse Analysis		SECTION IIB
No. Date App. Revisions	Drawn by R.V.A.					DRAWING NO. SHEET NO.
	Checked by					
	DRAWING SCALE:					

dents_vertical 1/15/2009 3:42:36 PM

BRUG MODEL

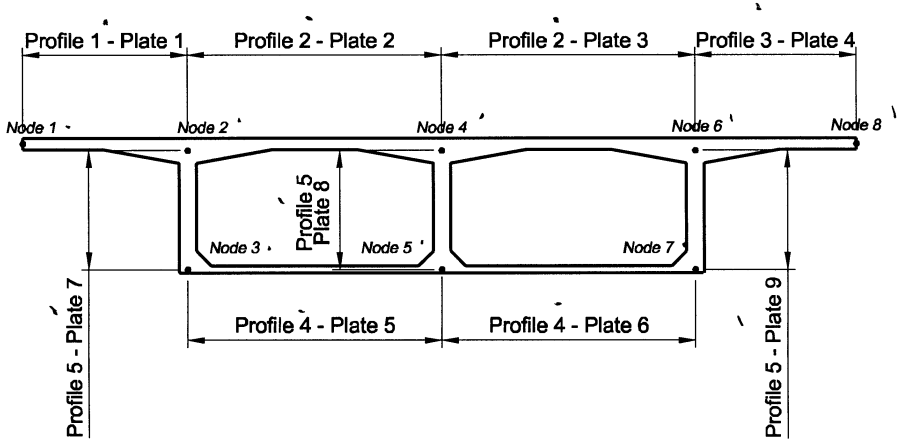

✓ DEM
01/15/09

4.5.1/2

HALF SIZE PRINT - 11x17					
No	Date	App	Revisions	Designed by	
				Drawn by R.V.A.	
				Checked by	
				DRAWING SCALE:	

URS

URS Corporation Southern
7650 Corporate Center Drive
Suite 400
Miami, FL 33126-1220
Tel. (305) 262-7466
C.A. No. EB 00000022

TYPICAL SECTION - Transverse Analysis

SECTION IIB

DRAWING NO.

SHEET NO.

NAME P.E. NO.

SPECIALS

pwMain_Template

1/14/2009 10:33:48 AM

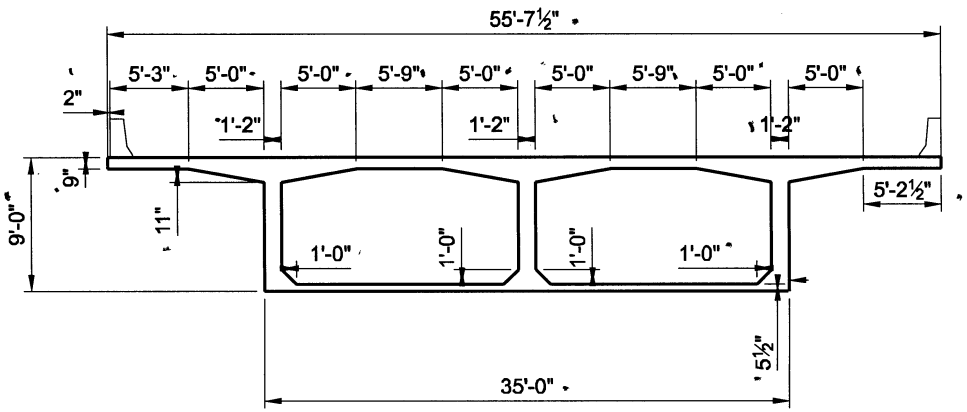

DIMENSIONS

✓ DLM
01/15/09

4.5.1/3

HALF SIZE PRINT - 11x17					
No	Date	App	Revisions	Designed by	
				Drawn by R.V.A.	
				Checked by	
				DRAWING SCALE:	

URS Corporation Southern
7650 Corporate Center Drive
Suite 400
Miami, FL 33126-1220
Tel: (305) 262-7485
C.A. No. EB 00000002

TYPICAL SECTION - Transverse Analysis

SECTION IIB

DRAWING NO. | SHEET NO. | NAME P.C. NO. | SFILE3

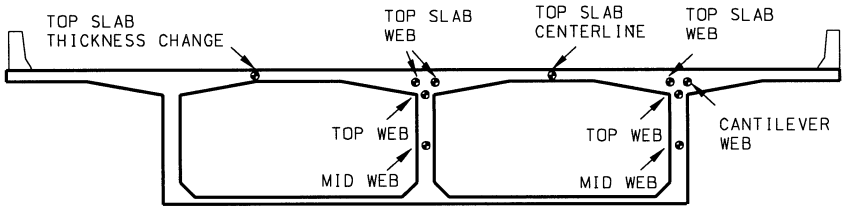

RATING POINTS

VDEM
01/15/09

4.5.1/4

HALF SIZE PRINT - 11x17

Designed by
Drawn by R.V.A.
Checked by
DRAWING BOUND

URS Corporation Southern
7650 Corporate Center Drive
Suite 400
Miami, FL 33126-1220
Tel: (305) 262-7460
C.A. No. EB 00000002

TYPICAL SECTION - Transverse Analysis

SECTION IIB

DRAWING NO.
SHEET NO.
NAME P.C. NO.
SFLEX.4
1/15/2009 7:13:06 AM

URS CORPORATION	Made by:	PT	Date: 15-Jan-09	Job Number: 25626272.00001	Job Number: 25626272.00001
	Checked by:	DYM	Date: 1-15-09	Sheet Number:	Sheet Number:
Brug Joints and Members	Backchecked by:		Date:		

V:\Projects\Cline Avenue\Load Rating Analysis\Transverse Analysis\Spreadsheet\[Brug Input.xls]Model_Joints Brugh_II_B

Data measured from Microstation File

V:\Projects\Cline Avenue\Load Rating Analysis\Transverse Analysis\Spreadsheet\[Brug Input.xls]Model_Joints Brugh_II_B

GTStrudl Joint	X ft	Y ft	Height ft	BRUG NODE
1	0.0000	8.1667	0.750	1
2	5.4167	8.1667	0.750	
3	7.9167	8.1667	1.208	
4	10.4167	8.1667	1.667	
5	11.0000	8.1667	1.667	2
6	11.5833	8.1667	1.667	
7	16.5833	8.1667	0.750	
8	19.4583	8.1667	0.750	
9	22.3333	8.1667	0.750	
10	27.3333	8.1667	1.667	
11	27.9167	8.1667	1.667	4
12	28.5000	8.1667	1.667	
13	33.5000	8.1667	0.750	
14	36.3750	8.1667	0.750	
15	39.2500	8.1667	0.750	
16	44.2500	8.1667	1.667	
17	44.8333	8.1667	1.667	6
18	45.4167	8.1667	1.667	
19	47.9167	8.1667	1.208	
20	50.4167	8.1667	0.750	
21	55.6250	8.1667	0.750	8
22	11.0000	7.3333	1.167	
23	11.0000	4.3958	1.167	
24	11.0000	1.4583	1.167	
25	11.0000	0.2292	1.167	3
26	11.5833	0.2292	1.458	
27	12.5833	0.2292	0.458	
28	19.4583	0.2292	0.458	
29	26.3333	0.2292	0.458	
30	27.3333	0.2292	1.458	
31	27.9167	0.2292	1.458	5
32	28.5000	0.2292	1.458	
33	29.5000	0.2292	0.458	
34	36.3750	0.2292	0.458	
35	43.2500	0.2292	0.458	
36	44.2500	0.2292	1.458	
37	44.8333	0.2292	1.458	7
38	44.8333	1.4583	1.167	
39	44.8333	4.3958	1.167	
40	44.8333	7.3333	1.167	
42	27.9167	1.4583	1.167	
43	27.9167	4.3958	1.167	
44	27.9167	7.3333	1.167	

GTStrudl MEMBER	BEGIN JOINT	END JOINT	Length ft
1	1	2	5.417
2	2	3	2.500
3	3	4	2.500
4	4	5	0.583
5	5	6	0.583
6	6	7	5.000
7	7	8	2.875
8	8	9	2.875
9	9	10	5.000
10	10	11	0.583
11	11	12	0.583
12	12	13	5.000
13	13	14	2.875
14	14	15	2.875
15	15	16	5.000
16	16	17	0.583
17	17	18	0.583
18	18	19	2.500
19	19	20	2.500
20	20	21	5.208
21	5	22	0.833
22	22	23	2.937
23	23	24	2.938
24	24	25	1.229
25	25	26	0.583
26	26	27	1.000
27	27	28	6.875
28	28	29	6.875
29	29	30	1.000
30	30	31	0.583
31	31	32	0.583
32	32	33	1.000
33	33	34	6.875
34	34	35	6.875
35	35	36	1.000
36	36	37	0.583
37	37	38	1.229
38	38	39	2.938
39	39	40	2.938
40	40	17	0.833
41	31	42	1.229
42	42	43	2.938
43	43	44	2.938
44	44	11	0.833

LEFT CANTILEVER

GT Joint	Brug Section	Brug Joint	Length	Height
1	1L	1	0.0000	0.7500
2	1A	2	5.4167	0.7500
3	1B	3	7.9167	1.2083
4	1C	4	10.4167	1.6667
5	1R	5	11.0000	1.6667

LEFT CELL

GT Joint	Brug Section	Brug Joint	Length	Height
5	2L	1	0.0000	1.6667
6	2A	2	0.5833	1.6667
7	2B	3	5.5833	0.7500
8	2C	4	8.4583	0.7500
9		5	11.3333	0.7500
10		6	16.3333	1.6667
11	2R	7	16.9167	1.6667

RIGHT CELL

GT Joint	Brug Section	Brug Joint	Length	Height
11	3L	1	0.0000	1.6667
12	3A	2	0.5833	1.6667
13	3B	3	5.5833	0.7500
14	3C	4	8.4583	0.7500
15		5	11.3333	0.7500
16		6	16.3333	1.6667
17	3R	7	16.9167	1.6667

RIGHT CANTILEVER

GT Joint	Brug Section	Brug Joint	Length	Height
17	4L	1	0.0000	1.6667
18	4A	2	0.5833	1.6667
19	4B	3	3.0833	1.2083
20	4C	4	5.5833	0.7500
21	4R	5	10.7917	0.7500

BOTTOM SLAB LEFT

GT Joint	Brug Section	Brug Joint	Length	Height
25	5L	1	0.0000	1.4583
26	5A	2	0.5833	1.4583
27	5B	3	1.5833	0.4583
28	5C	4	8.4583	0.4583
29		5	15.3333	0.4583
30		6	16.3333	1.4583
31	5R	7	16.9167	1.4583

BOTTOM SLAB RIGHT

GT Joint	Brug Section	Brug Joint	Length	Height
31	6L	1	0.0000	1.4583
32	6A	2	0.5833	1.4583
33	6B	3	1.5833	0.4583
34	6C	4	8.4583	0.4583
35		5	15.3333	0.4583
36		6	16.3333	1.4583
37	6R	7	16.9167	1.4583

WEB

GT Joint	Brug Section	Brug Joint	Length	Height
5	7 TOP	1	0.0000	1.1667
22	7A	2	0.8334	1.1667
23	7B	3	3.7709	1.1667
24	7C	4	6.7084	1.1667
25	7 BOTTOM	5	7.9375	1.1667

4.5.15

TRUCK LOCATION - NO TRAFFIC ON SHOULDERS

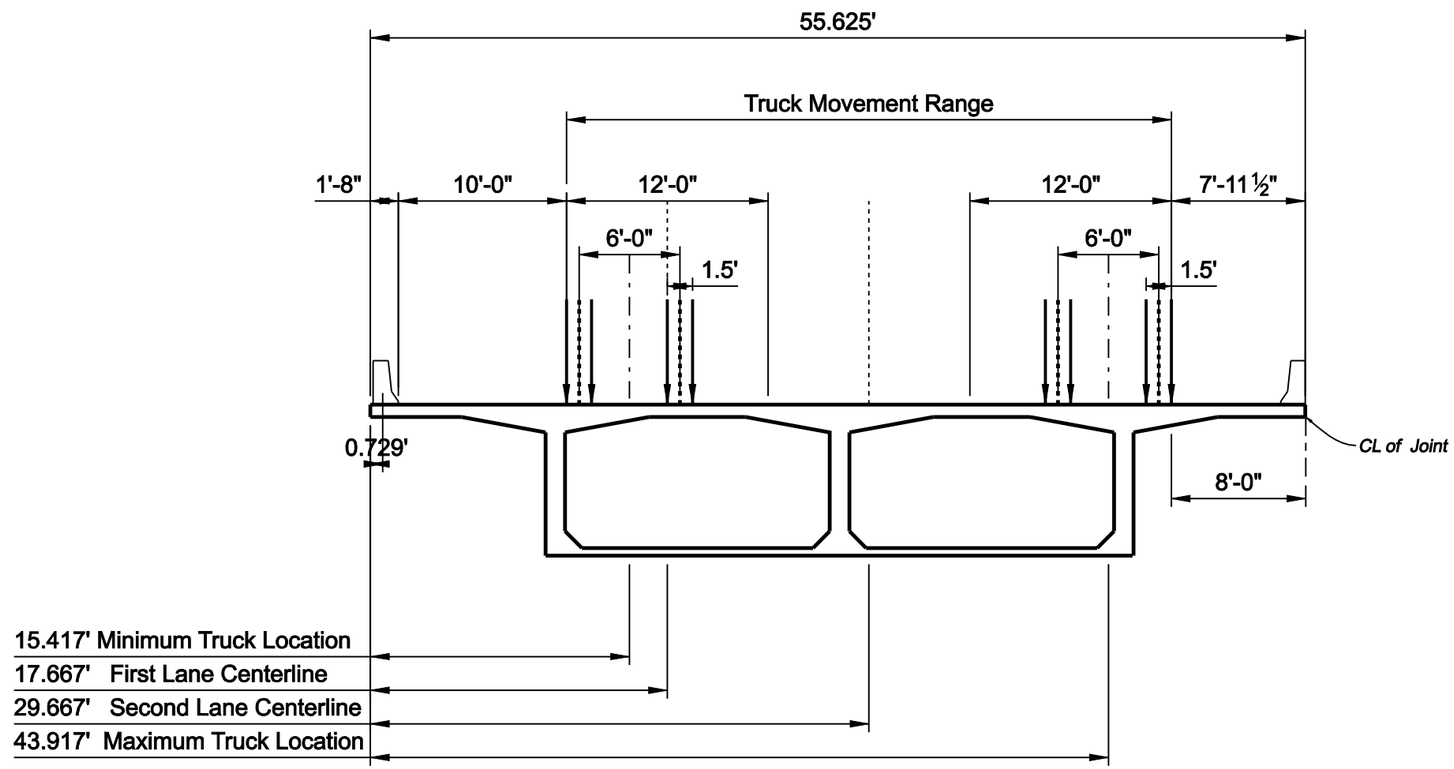

Design by: PT 9/09
Independent Check by: RJB 9/09

HALF SIZE PRINT - 11x17

No.	Date	App.	Revisions

Designed by .
Drawn by R.V.A.
Checked by .
DRAWING SCALE:

URS Corporation Southern
7650 Corporate Center Drive
Suite 400
Miami, FL 33126-1220
Tel: (305) 262-7468
C.A. No. EB 00000002

TYPICAL SECTION - Transverse Analysis

NAME FILE NO.

SECTION 1IB

DRAWING NO. . SHEET NO. .

USERS SCALES STRMS SFILES

4.5.1/6

4.5.2 Brug Input AASHTO Lanes

```
* start ; column 11-30 can be used to have your own text on the top of each page
*   5   10   15   20   25   30   35   40   45   50   55   60   65   70   75   80
*   V    V    V    V    V    V    V    V    V    V    V    V    V    V    V    V
00001  1 1     VEH: HL93- TRUCK - SINGLE VEHICLE
* code 1001
Cline Avenue - Striped Lanes - Double Box Mainline - 4 Webs - 55.625' Wide
* code 1002
    2         1
* code 1003
*   5   10   15   20   25   30   35   40   45   50   55   60   65   70   75   80
*   V    V    V    V    V    V    V    V    V    V    V    V    V    V    V    V
250.0      183.0    55.625    1.0       1.0       1.3
* code 1004
    1    0    2
* code 1005
   72    1
* code 1005a
* location traffic lanes
17.667
* maximum and minimum truck
15.417    43.917    10.000
* code 1007, linear loads
0.7350    0.441
54.890    0.441
* code 1201
    8    5    4    2    3
* code 1202 coordinates
 0.0000   0.0000
11.0000   0.0000
11.0000   -7.9375
27.9167   0.0000
27.9167   -7.9375
44.8333   0.0000
44.8333   -7.9375
55.6250   0.0000
* code 1203 - profile 1
    5    2    3    4
0.0000    0.7500
5.4167    0.7500
7.9167    1.2083
10.4167   1.6667
11.0000   1.6667
* code 1203 - profile 2
    7    2    3    4
0.0000    1.6667
0.5833    1.6667
5.5833    0.7500
8.4583    0.7500
11.3333   0.7500
16.3333   1.6667
16.9167   1.6667
* code 1203 - profile 3
    5    2    3    4
0.0000    1.6667
0.5833    1.6667
3.0833    1.2083
5.5833    0.7500
10.7917   0.7500
* code 1203 - profile 4
    7    2    4    5
0.0000    1.4583
0.5833    1.4583
1.5833    0.4583
8.4583    0.4583
15.3333   0.4583
16.3333   1.4583
16.9167   1.4583
* code 1203 - profile 5
    5    2    3    4
0.0000    1.1667
0.8334    1.1667
3.7709    1.1667
6.7084    1.1667
7.9375    1.1667
* code 1204 - assembling boxgirder
    1    2    1
    2    4    2
    4    6    2
    6    8    3
    3    5    4
    5    7    4
```

```
    2    3    5
    4    5    5
    6    7    5
* code 1205 control code
    1    2   13    1    1    0    4    3     1.0       1.0
* code 1206 wheels/axle
       0.0
       1.5
       6.0
       7.5 0.833
* code 1207 definition axles
0.0       0.1
14.0      0.4
28.0      0.4
* code 1208 - accuracy
0.00001   0.00001   0.00001   .00001    .00001
* code 1209 number sections
   33
   1A   1B   1C   1R   2L   2A   2B   2C   2R   3L   3A   3B   3C   3R
   4L   4A   4B   4C   5A   5B   5C   6A   6B   6C
   7L   7A   7B   8L   8A   8B   9L   9A   9B
* code 1210 - density conrete
0.156
* code 1211 - extra forces selfweight

* code 1212 - surcharge
1.3906
* code 1213 - Prestressing Layout - NONE
```

```
* start ; column 11-30 can be used to have your own text on the top of each page
*   5   10   15   20   25   30   35   40   45   50   55   60   65   70   75   80
*   V    V    V    V    V    V    V    V    V    V    V    V    V    V    V    V
00001  1 1     VEH: HL93- TANDEM - SINGLE VEHICLE
* code 1001
Cline Avenue - Striped Lanes - Double Box Mainline - 4 Webs - 55.625' Wide
* code 1002
    2         1
* code 1003
*   5   10   15   20   25   30   35   40   45   50   55   60   65   70   75   80
*   V    V    V    V    V    V    V    V    V    V    V    V    V    V    V    V
250.0      183.0    55.625    1.0       1.0       1.3
* code 1004
    1    0    2
* code 1005
   50    1
* code 1005a
* location traffic lanes
17.667
* maximum and minimum truck
15.417    43.917    10.000
* code 1007, linear loads
0.7350    0.441
54.890    0.441
* code 1201
    8    5    4    2    3
* code 1202 coordinates
 0.0000   0.0000
11.0000   0.0000
11.0000   -7.9375
27.9167   0.0000
27.9167   -7.9375
44.8333   0.0000
44.8333   -7.9375
55.6250   0.0000
* code 1203 - profile 1
    5    2    3    4
0.0000    0.7500
5.4167    0.7500
7.9167    1.2083
10.4167   1.6667
11.0000   1.6667
* code 1203 - profile 2
    7    2    3    4
0.0000    1.6667
0.5833    1.6667
5.5833    0.7500
8.4583    0.7500
11.3333   0.7500
16.3333   1.6667
16.9167   1.6667
* code 1203 - profile 3
    5    2    3    4
0.0000    1.6667
0.5833    1.6667
3.0833    1.2083
5.5833    0.7500
10.7917   0.7500
* code 1203 - profile 4
    7    2    4    5
0.0000    1.4583
0.5833    1.4583
1.5833    0.4583
8.4583    0.4583
15.3333   0.4583
16.3333   1.4583
16.9167   1.4583
* code 1203 - profile 5
    5    2    3    4
0.0000    1.1667
0.8334    1.1667
3.7709    1.1667
6.7084    1.1667
7.9375    1.1667
* code 1204 - assembling boxgirder
    1    2    1
    2    4    2
    4    6    2
    6    8    3
    3    5    4
    5    7    4
```

```
    2    3    5
    4    5    5
    6    7    5
* code 1205 control code
    1    2   13    1    1    0    4    2     1.0       1.0
* code 1206 wheels/axle
       0.0
       1.5
       6.0
       7.5 0.833
* code 1207 definition axles
0.0       0.5
4.0       0.5
* code 1208 - accuracy
0.00001   0.00001   0.00001   .00001    .00001
* code 1209 number sections
   33
   1A   1B   1C   1R   2L   2A   2B   2C   2R   3L   3A   3B   3C   3R
   4L   4A   4B   4C   5A   5B   5C   6A   6B   6C
   7L   7A   7B   8L   8A   8B   9L   9A   9B
* code 1210 - density conrete
0.156
* code 1211 - extra forces selfweight

* code 1212 - surcharge
1.3906
* code 1213 - Prestressing Layout - NONE
```

```
* start ; column 11-30 can be used to have your own text on the top of each page
*   5   10   15   20   25   30   35   40   45   50   55   60   65   70   75   80
*   V    V    V    V    V    V    V    V    V    V    V    V    V    V    V    V
00001  1 1     VEH: R1 - TOLL ROAD LOADING No. 1 - SINGLE VEHICLE
* code 1001
Cline Avenue - Striped Lanes - Double Box Mainline - 4 Webs - 55.625' Wide
* code 1002
    2         1
* code 1003
*   5   10   15   20   25   30   35   40   45   50   55   60   65   70   75   80
*   V    V    V    V    V    V    V    V    V    V    V    V    V    V    V    V
250.0      183.0    55.625    1.0       1.0       1.3
* code 1004
    1    0    2
* code 1005
   90    1
* code 1005a
* location traffic lanes
17.667
* maximum and minimum truck
15.417    43.917    10.000
* code 1007, linear loads
0.7350    0.441
54.890    0.441
* code 1201
    8    5    4    2    3
* code 1202 coordinates
 0.0000   0.0000
11.0000   0.0000
11.0000   -7.9375
27.9167   0.0000
27.9167   -7.9375
44.8333   0.0000
44.8333   -7.9375
55.6250   0.0000
* code 1203 - profile 1
    5    2    3    4
0.0000    0.7500
5.4167    0.7500
7.9167    1.2083
10.4167   1.6667
11.0000   1.6667
* code 1203 - profile 2
    7    2    3    4
0.0000    1.6667
0.5833    1.6667
5.5833    0.7500
8.4583    0.7500
11.3333   0.7500
16.3333   1.6667
16.9167   1.6667
* code 1203 - profile 3
    5    2    3    4
0.0000    1.6667
0.5833    1.6667
3.0833    1.2083
5.5833    0.7500
10.7917   0.7500
* code 1203 - profile 4
    7    2    4    5
0.0000    1.4583
0.5833    1.4583
1.5833    0.4583
8.4583    0.4583
15.3333   0.4583
16.3333   1.4583
16.9167   1.4583
* code 1203 - profile 5
    5    2    3    4
0.0000    1.1667
0.8334    1.1667
3.7709    1.1667
6.7084    1.1667
7.9375    1.1667
* code 1204 - assembling boxgirder
    1    2    1
    2    4    2
    4    6    2
    6    8    3
    3    5    4
    5    7    4
```

```
    2    3    5
    4    5    5
    6    7    5
* code 1205 control code
    1    2   13    1    1    0    4    5     1.0       1.0
* code 1206 wheels/axle
       0.0
       1.5
       6.0
       7.5 0.833
* code 1207 definition axles
0.00      18.00
10.00     18.00
14.00     18.00
24.00     18.00
28.00     18.00
* code 1208 - accuracy
0.00001   0.00001   0.00001   .00001    .00001
* code 1209 number sections
   33
   1A   1B   1C   1R   2L   2A   2B   2C   2R   3L   3A   3B   3C   3R
   4L   4A   4B   4C   5A   5B   5C   6A   6B   6C
   7L   7A   7B   8L   8A   8B   9L   9A   9B
* code 1210 - density conrete
0.156
* code 1211 - extra forces selfweight

* code 1212 - surcharge
1.3906
* code 1213 - Prestressing Layout - NONE
```

```
* start ; column 11-30 can be used to have your own text on the top of each page
*   5   10   15   20   25   30   35   40   45   50   55   60   65   70   75   80
*   V    V    V    V    V    V    V    V    V    V    V    V    V    V    V    V
00001  1 1     VEH: R2 - TOLL ROAD LOADING No. 2 - SINGLE VEHICLE
* code 1001
Cline Avenue - Striped Lanes - Double Box Mainline - 4 Webs - 55.625' Wide
* code 1002
    2         1
* code 1003
*   5   10   15   20   25   30   35   40   45   50   55   60   65   70   75   80
*   V    V    V    V    V    V    V    V    V    V    V    V    V    V    V    V
250.0      183.0    55.625    1.0       1.0       1.3
* code 1004
    1    0    2
* code 1005
   90    1
* code 1005a
* location traffic lanes
17.667
* maximum and minimum truck
15.417    43.917    10.000
* code 1007, linear loads
0.7350    0.441
54.890    0.441
* code 1201
    8    5    4    2    3
* code 1202 coordinates
 0.0000   0.0000
11.0000   0.0000
11.0000   -7.9375
27.9167   0.0000
27.9167   -7.9375
44.8333   0.0000
44.8333   -7.9375
55.6250   0.0000
* code 1203 - profile 1
    5    2    3    4
0.0000    0.7500
5.4167    0.7500
7.9167    1.2083
10.4167   1.6667
11.0000   1.6667
* code 1203 - profile 2
    7    2    3    4
0.0000    1.6667
0.5833    1.6667
5.5833    0.7500
8.4583    0.7500
11.3333   0.7500
16.3333   1.6667
16.9167   1.6667
* code 1203 - profile 3
    5    2    3    4
0.0000    1.6667
0.5833    1.6667
3.0833    1.2083
5.5833    0.7500
10.7917   0.7500
* code 1203 - profile 4
    7    2    4    5
0.0000    1.4583
0.5833    1.4583
1.5833    0.4583
8.4583    0.4583
15.3333   0.4583
16.3333   1.4583
16.9167   1.4583
* code 1203 - profile 5
    5    2    3    4
0.0000    1.1667
0.8334    1.1667
3.7709    1.1667
6.7084    1.1667
7.9375    1.1667
* code 1204 - assembling boxgirder
    1    2    1
    2    4    2
    4    6    2
    6    8    3
    3    5    4
    5    7    4
```

```
    2    3    5
    4    5    5
    6    7    5
* code 1205 control code
    1    2   13    1    1    0    4    4     1.0       1.0
* code 1206 wheels/axle
       0.0
       1.5
       6.0
       7.5 0.833
* code 1207 definition axles
0.00      22.50
14.00     22.50
23.00     22.50
37.00     22.50
* code 1208 - accuracy
0.00001   0.00001   0.00001   .00001    .00001
* code 1209 number sections
   33
   1A   1B   1C   1R   2L   2A   2B   2C   2R   3L   3A   3B   3C   3R
   4L   4A   4B   4C   5A   5B   5C   6A   6B   6C
   7L   7A   7B   8L   8A   8B   9L   9A   9B
* code 1210 - density conrete
0.156
* code 1211 - extra forces selfweight

* code 1212 - surcharge
1.3906
* code 1213 - Prestressing Layout - NONE
```

```
* start ; column 11-30 can be used to have your own text on the top of each page
*   5   10   15   20   25   30   35   40   45   50   55   60   65   70   75   80
*   V    V    V    V    V    V    V    V    V    V    V    V    V    V    V    V
00001  1 1     VEH: R3 - TOLL ROAD LOADING No. 3 - SINGLE VEHICLE
* code 1001
Cline Avenue - Striped Lanes - Double Box Mainline - 4 Webs - 55.625' Wide
* code 1002
    2         1
* code 1003
*   5   10   15   20   25   30   35   40   45   50   55   60   65   70   75   80
*   V    V    V    V    V    V    V    V    V    V    V    V    V    V    V    V
250.0      183.0    55.625    1.0       1.0       1.3
* code 1004
    1    0    2
* code 1005
  126    1
* code 1005a
* location traffic lanes
17.667
* maximum and minimum truck
15.417    43.917    10.000
* code 1007, linear loads
0.7350    0.441
54.890    0.441
* code 1201
    8    5    4    2    3
* code 1202 coordinates
 0.0000   0.0000
11.0000   0.0000
11.0000   -7.9375
27.9167   0.0000
27.9167   -7.9375
44.8333   0.0000
44.8333   -7.9375
55.6250   0.0000
* code 1203 - profile 1
    5    2    3    4
0.0000    0.7500
5.4167    0.7500
7.9167    1.2083
10.4167   1.6667
11.0000   1.6667
* code 1203 - profile 2
    7    2    3    4
0.0000    1.6667
0.5833    1.6667
5.5833    0.7500
8.4583    0.7500
11.3333   0.7500
16.3333   1.6667
16.9167   1.6667
* code 1203 - profile 3
    5    2    3    4
0.0000    1.6667
0.5833    1.6667
3.0833    1.2083
5.5833    0.7500
10.7917   0.7500
* code 1203 - profile 4
    7    2    4    5
0.0000    1.4583
0.5833    1.4583
1.5833    0.4583
8.4583    0.4583
15.3333   0.4583
16.3333   1.4583
16.9167   1.4583
* code 1203 - profile 5
    5    2    3    4
0.0000    1.1667
0.8334    1.1667
3.7709    1.1667
6.7084    1.1667
7.9375    1.1667
* code 1204 - assembling boxgirder
    1    2    1
    2    4    2
    4    6    2
    6    8    3
    3    5    4
    5    7    4
```

```
    2    3    5
    4    5    5
    6    7    5
* code 1205 control code
    1    2   13    1    1    0    4    7     1.0       1.0
* code 1206 wheels/axle
       0.0
       1.5
       6.0
       7.5 0.833
* code 1207 definition axles
0.00      18.00
10.00     18.00
14.00     18.00
40.00     18.00
44.00     18.00
56.00     18.00
76.00     18.00
* code 1208 - accuracy
0.00001   0.00001   0.00001   .00001    .00001
* code 1209 number sections
   33
   1A   1B   1C   1R   2L   2A   2B   2C   2R   3L   3A   3B   3C   3R
   4L   4A   4B   4C   5A   5B   5C   6A   6B   6C
   7L   7A   7B   8L   8A   8B   9L   9A   9B
* code 1210 - density conrete
0.156
* code 1211 - extra forces selfweight

* code 1212 - surcharge
1.3906
* code 1213 - Prestressing Layout - NONE
```

```
* start ; column 11-30 can be used to have your own text on the top of each page
*   5   10   15   20   25   30   35   40   45   50   55   60   65   70   75   80
*   V    V    V    V    V    V    V    V    V    V    V    V    V    V    V    V
00001  1 1     VEH: R4 - MICHIGAN TRUCK TRAIN No.5 - SINGLE TRUCK
* code 1001
Cline Avenue - Striped Lanes - Double Box Mainline - 4 Webs - 55.625' Wide
* code 1002
    2         1
* code 1003
*   5   10   15   20   25   30   35   40   45   50   55   60   65   70   75   80
*   V    V    V    V    V    V    V    V    V    V    V    V    V    V    V    V
250.0      183.0    55.625    1.0       1.0       1.3
* code 1004
    1    0    2
* code 1005
  134    1
* code 1005a
* location traffic lanes
17.667
* maximum and minimum truck
15.417    43.917    10.000
* code 1007, linear loads
0.7350    0.441
54.890    0.441
* code 1201
    8    5    4    2    3
* code 1202 coordinates
 0.0000   0.0000
11.0000   0.0000
11.0000   -7.9375
27.9167   0.0000
27.9167   -7.9375
44.8333   0.0000
44.8333   -7.9375
55.6250   0.0000
* code 1203 - profile 1
    5    2    3    4
0.0000    0.7500
5.4167    0.7500
7.9167    1.2083
10.4167   1.6667
11.0000   1.6667
* code 1203 - profile 2
    7    2    3    4
0.0000    1.6667
0.5833    1.6667
5.5833    0.7500
8.4583    0.7500
11.3333   0.7500
16.3333   1.6667
16.9167   1.6667
* code 1203 - profile 3
    5    2    3    4
0.0000    1.6667
0.5833    1.6667
3.0833    1.2083
5.5833    0.7500
10.7917   0.7500
* code 1203 - profile 4
    7    2    4    5
0.0000    1.4583
0.5833    1.4583
1.5833    0.4583
8.4583    0.4583
15.3333   0.4583
16.3333   1.4583
16.9167   1.4583
* code 1203 - profile 5
    5    2    3    4
0.0000    1.1667
0.8334    1.1667
3.7709    1.1667
6.7084    1.1667
7.9375    1.1667
* code 1204 - assembling boxgirder
    1    2    1
    2    4    2
    4    6    2
    6    8    3
    3    5    4
    5    7    4
```

```
    2    3    5
    4    5    5
    6    7    5
* code 1205 control code
    1    2   13    1    1    0    4    8     1.0       1.0
* code 1206 wheels/axle
       0.0
       1.5
       6.0
       7.5 0.833
* code 1207 definition axles
0.00      12.00
9.00      16.00
12.50     16.00
21.50     18.00
30.50     18.00
39.50     18.00
48.50     18.00
57.50     18.00
* code 1208 - accuracy
0.00001   0.00001   0.00001   .00001    .00001
* code 1209 number sections
   33
   1A   1B   1C   1R   2L   2A   2B   2C   2R   3L   3A   3B   3C   3R
   4L   4A   4B   4C   5A   5B   5C   6A   6B   6C
   7L   7A   7B   8L   8A   8B   9L   9A   9B
* code 1210 - density conrete
0.156
* code 1211 - extra forces selfweight

* code 1212 - surcharge
1.3906
* code 1213 - Prestressing Layout - NONE
```

```
* start ; column 11-30 can be used to have your own text on the top of each page
*   5   10   15   20   25   30   35   40   45   50   55   60   65   70   75   80
*   V    V    V    V    V    V    V    V    V    V    V    V    V    V    V    V
00001  1 1     VEH: R5 - MICHIGAN TRUCK TRAIN No. 8
* code 1001
Cline Avenue - Striped Lanes - Double Box Mainline - 4 Webs - 55.625' Wide
* code 1002
    2         1
* code 1003
*   5   10   15   20   25   30   35   40   45   50   55   60   65   70   75   80
*   V    V    V    V    V    V    V    V    V    V    V    V    V    V    V    V
250.0      183.0    55.625    1.0       1.0       1.3
* code 1004
    1    0    2
* code 1005
* Vehicle weight is 134.2 Kips, rounded to 135
  135    1
* code 1005a
* location traffic lanes
17.667
* maximum and minimum truck
15.417    43.917    10.000
* code 1007, linear loads
0.7350    0.441
54.890    0.441
* code 1201
    8    5    4    2    3
* code 1202 coordinates
 0.0000   0.0000
11.0000   0.0000
11.0000   -7.9375
27.9167   0.0000
27.9167   -7.9375
44.8333   0.0000
44.8333   -7.9375
55.6250   0.0000
* code 1203 - profile 1
    5    2    3    4
0.0000    0.7500
5.4167    0.7500
7.9167    1.2083
10.4167   1.6667
11.0000   1.6667
* code 1203 - profile 2
    7    2    3    4
0.0000    1.6667
0.5833    1.6667
5.5833    0.7500
8.4583    0.7500
11.3333   0.7500
16.3333   1.6667
16.9167   1.6667
* code 1203 - profile 3
    5    2    3    4
0.0000    1.6667
0.5833    1.6667
3.0833    1.2083
5.5833    0.7500
10.7917   0.7500
* code 1203 - profile 4
    7    2    4    5
0.0000    1.4583
0.5833    1.4583
1.5833    0.4583
8.4583    0.4583
15.3333   0.4583
16.3333   1.4583
16.9167   1.4583
* code 1203 - profile 5
    5    2    3    4
0.0000    1.1667
0.8334    1.1667
3.7709    1.1667
6.7084    1.1667
7.9375    1.1667
* code 1204 - assembling boxgirder
    1    2    1
    2    4    2
    4    6    2
    6    8    3
    3    5    4
```

```
    5    7    4
    2    3    5
    4    5    5
    6    7    5
* code 1205 control code
    1    2   13    1    1    0    4   11     1.0       1.0
* code 1206 wheels/axle
       0.0
       1.5
       6.0
       7.5 0.833
* code 1207 definition axles
0.00      12.00
9.00      13.40
12.50     13.40
21.50     10.90
25.00     10.90
28.50     10.90
32.00     10.90
35.50     10.90
39.00     10.90
48.00     15.00
57.00     15.00
* code 1208 - accuracy
0.00001   0.00001   0.00001   .00001    .00001
* code 1209 number sections
   33
   1A   1B   1C   1R   2L   2A   2B   2C   2R   3L   3A   3B   3C   3R
   4L   4A   4B   4C   5A   5B   5C   6A   6B   6C
   7L   7A   7B   8L   8A   8B   9L   9A   9B
* code 1210 - density conrete
0.156
* code 1211 - extra forces selfweight

* code 1212 - surcharge
1.3906
* code 1213 - Prestressing Layout - NONE
```

```
* start ; column 11-30 can be used to have your own text on the top of each page
*   5   10   15   20   25   30   35   40   45   50   55   60   65   70   75   80
*   V    V    V    V    V    V    V    V    V    V    V    V    V    V    V    V
00001  1 1     VEH: S1 - SPECIAL TRUCK 11 AXLE
* code 1001
Cline Avenue - Striped Lanes - Double Box Mainline - 4 Webs - 55.625' Wide
* code 1002
    2         1
* code 1003
*   5   10   15   20   25   30   35   40   45   50   55   60   65   70   75   80
*   V    V    V    V    V    V    V    V    V    V    V    V    V    V    V    V
250.0      183.0    55.625    1.0       1.0       1.3
* code 1004
    1    0    2
* code 1005
  258    1
* code 1005a
* location traffic lanes
17.667
* maximum and minimum truck
15.417    43.917    10.000
* code 1007, linear loads
0.7350    0.441
54.890    0.441
* code 1201
    8    5    4    2    3
* code 1202 coordinates
 0.0000   0.0000
11.0000   0.0000
11.0000   -7.9375
27.9167   0.0000
27.9167   -7.9375
44.8333   0.0000
44.8333   -7.9375
55.6250   0.0000
* code 1203 - profile 1
    5    2    3    4
0.0000    0.7500
5.4167    0.7500
7.9167    1.2083
10.4167   1.6667
11.0000   1.6667
* code 1203 - profile 2
    7    2    3    4
0.0000    1.6667
0.5833    1.6667
5.5833    0.7500
8.4583    0.7500
11.3333   0.7500
16.3333   1.6667
16.9167   1.6667
* code 1203 - profile 3
    5    2    3    4
0.0000    1.6667
0.5833    1.6667
3.0833    1.2083
5.5833    0.7500
10.7917   0.7500
* code 1203 - profile 4
    7    2    4    5
0.0000    1.4583
0.5833    1.4583
1.5833    0.4583
8.4583    0.4583
15.3333   0.4583
16.3333   1.4583
16.9167   1.4583
* code 1203 - profile 5
    5    2    3    4
0.0000    1.1667
0.8334    1.1667
3.7709    1.1667
6.7084    1.1667
7.9375    1.1667
* code 1204 - assembling boxgirder
    1    2    1
    2    4    2
    4    6    2
    6    8    3
    3    5    4
    5    7    4
```

```
    2    3    5
    4    5    5
    6    7    5
* code 1205 control code
    1    2   13    1    1    0    4   11     1.0       1.0
* code 1206 wheels/axle
       0.0
       1.5
       6.0
       7.5 0.833
* code 1207 definition axles
0.00      12.00
11.50     24.60
16.67     24.60
21.67     24.60
34.83     24.60
39.33     24.60
89.92     24.60
94.42     24.60
98.92     24.60
112.50     24.60
117.00     24.60
* code 1208 - accuracy
0.00001   0.00001   0.00001   .00001    .00001
* code 1209 number sections
   33
   1A   1B   1C   1R   2L   2A   2B   2C   2R   3L   3A   3B   3C   3R
   4L   4A   4B   4C   5A   5B   5C   6A   6B   6C
   7L   7A   7B   8L   8A   8B   9L   9A   9B
* code 1210 - density conrete
0.156
* code 1211 - extra forces selfweight

* code 1212 - surcharge
1.3906
* code 1213 - Prestressing Layout - NONE
```

```
* start ; column 11-30 can be used to have your own text on the top of each page
*   5   10   15   20   25   30   35   40   45   50   55   60   65   70   75   80
*   V    V    V    V    V    V    V    V    V    V    V    V    V    V    V    V
00001  1 1     VEH: S2 - SPECIAL TRUCK - 13 AXLE - SINGLE VEHICLE
* code 1001
Cline Avenue - Striped Lanes - Double Box Mainline - 4 Webs - 55.625' Wide
* code 1002
    2         1
* code 1003
*   5   10   15   20   25   30   35   40   45   50   55   60   65   70   75   80
*   V    V    V    V    V    V    V    V    V    V    V    V    V    V    V    V
250.0      183.0    55.625    1.0       1.0       1.3
* code 1004
    1    0    2
* code 1005
  267    1
* code 1005a
* location traffic lanes
17.667
* maximum and minimum truck
15.417    43.917    10.000
* code 1007, linear loads
0.7350    0.441
54.890    0.441
* code 1201
    8    5    4    2    3
* code 1202 coordinates
 0.0000   0.0000
11.0000   0.0000
11.0000   -7.9375
27.9167   0.0000
27.9167   -7.9375
44.8333   0.0000
44.8333   -7.9375
55.6250   0.0000
* code 1203 - profile 1
    5    2    3    4
0.0000    0.7500
5.4167    0.7500
7.9167    1.2083
10.4167   1.6667
11.0000   1.6667
* code 1203 - profile 2
    7    2    3    4
0.0000    1.6667
0.5833    1.6667
5.5833    0.7500
8.4583    0.7500
11.3333   0.7500
16.3333   1.6667
16.9167   1.6667
* code 1203 - profile 3
    5    2    3    4
0.0000    1.6667
0.5833    1.6667
3.0833    1.2083
5.5833    0.7500
10.7917   0.7500
* code 1203 - profile 4
    7    2    4    5
0.0000    1.4583
0.5833    1.4583
1.5833    0.4583
8.4583    0.4583
15.3333   0.4583
16.3333   1.4583
16.9167   1.4583
* code 1203 - profile 5
    5    2    3    4
0.0000    1.1667
0.8334    1.1667
3.7709    1.1667
6.7084    1.1667
7.9375    1.1667
* code 1204 - assembling boxgirder
    1    2    1
    2    4    2
    4    6    2
    6    8    3
    3    5    4
    5    7    4
```

```
    2    3    5
    4    5    5
    6    7    5
* code 1205 control code
    1    2   13    1    1    0    4   13     1.0       1.0
* code 1206 wheels/axle
       0.0
       1.5
       6.0
       7.5 0.833
* code 1207 definition axles
0.00      15.00
16.50     21.00
21.00     21.00
25.50     21.00
39.50     21.00
44.00     21.00
48.50     21.00
96.50     21.00
101.00    21.00
105.50    21.00
121.00    21.00
125.50    21.00
130.00    21.00
* code 1208 - accuracy
0.00001   0.00001   0.00001   .00001    .00001
* code 1209 number sections
   33
   1A   1B   1C   1R   2L   2A   2B   2C   2R   3L   3A   3B   3C   3R
   4L   4A   4B   4C   5A   5B   5C   6A   6B   6C
   7L   7A   7B   8L   8A   8B   9L   9A   9B
* code 1210 - density conrete
0.156
* code 1211 - extra forces selfweight

* code 1212 - surcharge
1.3906
* code 1213 - Prestressing Layout - NONE
```

```
* start ; column 11-30 can be used to have your own text on the top of each page
*   5   10   15   20   25   30   35   40   45   50   55   60   65   70   75   80
*   V    V    V    V    V    V    V    V    V    V    V    V    V    V    V    V
00001  1 1     VEH: S3 - SPECIAL TRUCK - 14 AXLE - SINGLE VEHICLE
* code 1001
Cline Avenue - Striped Lanes - Double Box Mainline - 4 Webs - 55.625' Wide
* code 1002
    2         1
* code 1003
*   5   10   15   20   25   30   35   40   45   50   55   60   65   70   75   80
*   V    V    V    V    V    V    V    V    V    V    V    V    V    V    V    V
250.0      183.0    55.625    1.0       1.0       1.3
* code 1004
    1    0    2
* code 1005
  350    1
* code 1005a
* location traffic lanes
17.667
* maximum and minimum truck
15.417    43.917    10.000
* code 1007, linear loads
0.7350    0.441
54.890    0.441
* code 1201
    8    5    4    2    3
* code 1202 coordinates
 0.0000   0.0000
11.0000   0.0000
11.0000   -7.9375
27.9167   0.0000
27.9167   -7.9375
44.8333   0.0000
44.8333   -7.9375
55.6250   0.0000
* code 1203 - profile 1
    5    2    3    4
0.0000    0.7500
5.4167    0.7500
7.9167    1.2083
10.4167   1.6667
11.0000   1.6667
* code 1203 - profile 2
    7    2    3    4
0.0000    1.6667
0.5833    1.6667
5.5833    0.7500
8.4583    0.7500
11.3333   0.7500
16.3333   1.6667
16.9167   1.6667
* code 1203 - profile 3
    5    2    3    4
0.0000    1.6667
0.5833    1.6667
3.0833    1.2083
5.5833    0.7500
10.7917   0.7500
* code 1203 - profile 4
    7    2    4    5
0.0000    1.4583
0.5833    1.4583
1.5833    0.4583
8.4583    0.4583
15.3333   0.4583
16.3333   1.4583
16.9167   1.4583
* code 1203 - profile 5
    5    2    3    4
0.0000    1.1667
0.8334    1.1667
3.7709    1.1667
6.7084    1.1667
7.9375    1.1667
* code 1204 - assembling boxgirder
    1    2    1
    2    4    2
    4    6    2
    6    8    3
    3    5    4
    5    7    4
```

```
    2    3    5
    4    5    5
    6    7    5
* code 1205 control code
    1    2   13    1    1    0    4   14     1.0       1.0
* code 1206 wheels/axle
       0.0
       1.5
       6.0
       7.5 0.833
* code 1207 definition axles
0.00      13.00
14.50     25.00
19.00     25.00
23.50     25.00
50.50     23.50
54.67     23.50
58.83     23.50
102.83    23.50
107.33    28.00
111.83    28.00
116.33    28.00
132.17    28.00
136.67    28.00
141.17    28.00
* code 1208 - accuracy
0.00001   0.00001   0.00001   .00001    .00001
* code 1209 number sections
   33
   1A   1B   1C   1R   2L   2A   2B   2C   2R   3L   3A   3B   3C   3R
   4L   4A   4B   4C   5A   5B   5C   6A   6B   6C
   7L   7A   7B   8L   8A   8B   9L   9A   9B
* code 1210 - density conrete
0.156
* code 1211 - extra forces selfweight

* code 1212 - surcharge
1.3906
* code 1213 - Prestressing Layout - NONE
```

1II_B_SL_S4_EL.txt 9/11/2009

```
* start ; column 11-30 can be used to have your own text on the top of each page
*   5   10   15   20   25   30   35   40   45   50   55   60   65   70   75   80
*   V    V    V    V    V    V    V    V    V    V    V    V    V    V    V    V
00001  1 1     VEH: S4 - SUPER LOAD -19 AXLES - SINGLE VEHICLE
* code 1001
Cline Avenue - Striped Lanes - Double Box Mainline - 4 Webs - 55.625' Wide
* code 1002
    2         1
* code 1003
*   5   10   15   20   25   30   35   40   45   50   55   60   65   70   75   80
*   V    V    V    V    V    V    V    V    V    V    V    V    V    V    V    V
250.0      183.0    55.625    1.0       1.0       1.3
* code 1004
    1    0    2
* code 1005
  305    1
* code 1005a
* location traffic lanes
17.667
* maximum and minimum truck
15.417    43.917    10.000
* code 1007, linear loads
0.7350    0.441
54.890    0.441
* code 1201
    8    5    4    2    3
* code 1202 coordinates
 0.0000   0.0000
11.0000   0.0000
11.0000   -7.9375
27.9167   0.0000
27.9167   -7.9375
44.8333   0.0000
44.8333   -7.9375
55.6250   0.0000
* code 1203 - profile 1
    5    2    3    4
0.0000    0.7500
5.4167    0.7500
7.9167    1.2083
10.4167   1.6667
11.0000   1.6667
* code 1203 - profile 2
    7    2    3    4
0.0000    1.6667
0.5833    1.6667
5.5833    0.7500
8.4583    0.7500
11.3333   0.7500
16.3333   1.6667
16.9167   1.6667
* code 1203 - profile 3
    5    2    3    4
0.0000    1.6667
0.5833    1.6667
3.0833    1.2083
5.5833    0.7500
10.7917   0.7500
* code 1203 - profile 4
    7    2    4    5
0.0000    1.4583
0.5833    1.4583
1.5833    0.4583
8.4583    0.4583
15.3333   0.4583
16.3333   1.4583
16.9167   1.4583
* code 1203 - profile 5
    5    2    3    4
0.0000    1.1667
0.8334    1.1667
3.7709    1.1667
6.7084    1.1667
7.9375    1.1667
* code 1204 - assembling boxgirder
    1    2    1
    2    4    2
    4    6    2
    6    8    3
    3    5    4
    5    7    4
```

```
    2    3    5
    4    5    5
    6    7    5
* code 1205 control code
    1    2   13    1    1    0    4   19     1.0       1.0
* code 1206 wheels/axle
       0.0
       1.5
       6.0
       7.5 0.833
* code 1207 definition axles
0.00      13.00
13.50     16.48
17.83     16.48
31.33     16.48
35.42     15.99
39.50     15.99
45.50     15.99
49.58     16.37
53.67     16.37
103.58    16.37
107.67    16.64
114.17    16.64
118.25    15.15
122.33    15.15
126.42    15.15
135.92    15.15
140.00    17.20
144.08    17.20
148.17    17.20
* code 1208 - accuracy
0.00001   0.00001   0.00001   .00001    .00001
* code 1209 number sections
   33
   1A   1B   1C   1R   2L   2A   2B   2C   2R   3L   3A   3B   3C   3R
   4L   4A   4B   4C   5A   5B   5C   6A   6B   6C
   7L   7A   7B   8L   8A   8B   9L   9A   9B
* code 1210 - density conrete
0.156
* code 1211 - extra forces selfweight

* code 1212 - surcharge
1.3906
* code 1213 - Prestressing Layout - NONE
```

```
* start ; column 11-30 can be used to have your own text on the top of each page
*   5   10   15   20   25   30   35   40   45   50   55   60   65   70   75   80
*   V    V    V    V    V    V    V    V    V    V    V    V    V    V    V    V
00001  1 1     VEH: S5 - SUPERLOAD - 19 AXLE - SINGLE VEHICLE
* code 1001
Cline Avenue - Striped Lanes - Double Box Mainline - 4 Webs - 55.625' Wide
* code 1002
    2         1
* code 1003
*   5   10   15   20   25   30   35   40   45   50   55   60   65   70   75   80
*   V    V    V    V    V    V    V    V    V    V    V    V    V    V    V    V
250.0      183.0    55.625    1.0       1.0       1.3
* code 1004
    1    0    2
* code 1005
  480    1
* code 1005a
* location traffic lanes
17.667
* maximum and minimum truck
15.417    43.917    10.000
* code 1007, linear loads
0.7350    0.441
54.890    0.441
* code 1201
    8    5    4    2    3
* code 1202 coordinates
 0.0000   0.0000
11.0000   0.0000
11.0000   -7.9375
27.9167   0.0000
27.9167   -7.9375
44.8333   0.0000
44.8333   -7.9375
55.6250   0.0000
* code 1203 - profile 1
    5    2    3    4
0.0000    0.7500
5.4167    0.7500
7.9167    1.2083
10.4167   1.6667
11.0000   1.6667
* code 1203 - profile 2
    7    2    3    4
0.0000    1.6667
0.5833    1.6667
5.5833    0.7500
8.4583    0.7500
11.3333   0.7500
16.3333   1.6667
16.9167   1.6667
* code 1203 - profile 3
    5    2    3    4
0.0000    1.6667
0.5833    1.6667
3.0833    1.2083
5.5833    0.7500
10.7917   0.7500
* code 1203 - profile 4
    7    2    4    5
0.0000    1.4583
0.5833    1.4583
1.5833    0.4583
8.4583    0.4583
15.3333   0.4583
16.3333   1.4583
16.9167   1.4583
* code 1203 - profile 5
    5    2    3    4
0.0000    1.1667
0.8334    1.1667
3.7709    1.1667
6.7084    1.1667
7.9375    1.1667
* code 1204 - assembling boxgirder
    1    2    1
    2    4    2
    4    6    2
    6    8    3
    3    5    4
    5    7    4
```

```
    2    3    5
    4    5    5
    6    7    5
* code 1205 control code
    1    2   13    1    1    0    4   19     1.0       1.0
* code 1206 wheels/axle
       0.0
       1.5
       6.0
       7.5 0.833
* code 1207 definition axles
0.00      12.88
12.50     25.95
17.50     25.95
31.58     25.95
36.58     25.95
41.58     25.95
55.67     25.95
60.67     25.95
65.67     25.95
115.67    25.95
120.67    25.95
125.67    25.95
139.75    25.95
144.75    25.95
149.75    25.95
163.83    25.95
168.83    25.95
173.83    25.95
178.83    25.95
* code 1208 - accuracy
0.00001   0.00001   0.00001   .00001    .00001
* code 1209 number sections
   33
   1A   1B   1C   1R   2L   2A   2B   2C   2R   3L   3A   3B   3C   3R
   4L   4A   4B   4C   5A   5B   5C   6A   6B   6C
   7L   7A   7B   8L   8A   8B   9L   9A   9B
* code 1210 - density conrete
0.156
* code 1211 - extra forces selfweight

* code 1212 - surcharge
1.3906
* code 1213 - Prestressing Layout - NONE
```

```
* start ; column 11-30 can be used to have your own text on the top of each page
*   5   10   15   20   25   30   35   40   45   50   55   60   65   70   75   80
*   V    V    V    V    V    V    V    V    V    V    V    V    V    V    V    V
00001  1 1     VEH: HL93- TRUCK
* code 1001
Cline Avenue - Striped Lanes - Double Box Mainline - 4 Webs - 55.625' Wide
* code 1002
    2         1
* code 1003
*   5   10   15   20   25   30   35   40   45   50   55   60   65   70   75   80
*   V    V    V    V    V    V    V    V    V    V    V    V    V    V    V    V
250.0      183.0    55.625    1.0       1.0       1.3
* code 1004
    2    0    2
* code 1005
   72
* code 1005a
* location traffic lanes
17.667    29.667
* maximum and minimum truck
15.417    43.917    10.000
* code 1007, linear loads
0.7350    0.441
54.890    0.441
* code 1201
    8    5    4    2    3
* code 1202 coordinates
 0.0000   0.0000
11.0000   0.0000
11.0000   -7.9375
27.9167   0.0000
27.9167   -7.9375
44.8333   0.0000
44.8333   -7.9375
55.6250   0.0000
* code 1203 - profile 1
    5    2    3    4
0.0000    0.7500
5.4167    0.7500
7.9167    1.2083
10.4167   1.6667
11.0000   1.6667
* code 1203 - profile 2
    7    2    3    4
0.0000    1.6667
0.5833    1.6667
5.5833    0.7500
8.4583    0.7500
11.3333   0.7500
16.3333   1.6667
16.9167   1.6667
* code 1203 - profile 3
    5    2    3    4
0.0000    1.6667
0.5833    1.6667
3.0833    1.2083
5.5833    0.7500
10.7917   0.7500
* code 1203 - profile 4
    7    2    4    5
0.0000    1.4583
0.5833    1.4583
1.5833    0.4583
8.4583    0.4583
15.3333   0.4583
16.3333   1.4583
16.9167   1.4583
* code 1203 - profile 5
    5    2    3    4
0.0000    1.1667
0.8334    1.1667
3.7709    1.1667
6.7084    1.1667
7.9375    1.1667
* code 1204 - assembling boxgirder
    1    2    1
    2    4    2
    4    6    2
    6    8    3
    3    5    4
    5    7    4
```

```
    2    3    5
    4    5    5
    6    7    5
* code 1205 control code
    1    2   13    1    1    0    4    3     1.0       1.0
* code 1206 wheels/axle
       0.0
       1.5
       6.0
       7.5 0.833
* code 1207 definition axles
0.0       0.1
14.0      0.4
28.0      0.4
* code 1208 - accuracy
0.00001   0.00001   0.00001   .00001    .00001
* code 1209 number sections
   33
   1A   1B   1C   1R   2L   2A   2B   2C   2R   3L   3A   3B   3C   3R
   4L   4A   4B   4C   5A   5B   5C   6A   6B   6C
   7L   7A   7B   8L   8A   8B   9L   9A   9B
* code 1210 - density conrete
0.156
* code 1211 - extra forces selfweight

* code 1212 - surcharge
1.3906
* code 1213 - Prestressing Layout - NONE
```

```
* start ; column 11-30 can be used to have your own text on the top of each page
*   5   10   15   20   25   30   35   40   45   50   55   60   65   70   75   80
*   V    V    V    V    V    V    V    V    V    V    V    V    V    V    V    V
00001  1 1     VEH: HL93- TANDEM
* code 1001
Cline Avenue - Load Rating - Double Box Mainline - 4 Webs - 55.625' Wide
* code 1002
    2         1
* code 1003
*   5   10   15   20   25   30   35   40   45   50   55   60   65   70   75   80
*   V    V    V    V    V    V    V    V    V    V    V    V    V    V    V    V
250.0      183.0    55.625    1.0       1.0       1.3
* code 1004
    2    0    2
* code 1005
   50
* code 1005a
* location traffic lanes
17.667    29.667
* maximum and minimum truck
15.417    43.917    10.000
* code 1007, linear loads
0.7350    0.441
54.890    0.441
* code 1201
    8    5    4    2    3
* code 1202 coordinates
 0.0000   0.0000
11.0000   0.0000
11.0000   -7.9375
27.9167   0.0000
27.9167   -7.9375
44.8333   0.0000
44.8333   -7.9375
55.6250   0.0000
* code 1203 - profile 1
    5    2    3    4
0.0000    0.7500
5.4167    0.7500
7.9167    1.2083
10.4167   1.6667
11.0000   1.6667
* code 1203 - profile 2
    7    2    3    4
0.0000    1.6667
0.5833    1.6667
5.5833    0.7500
8.4583    0.7500
11.3333   0.7500
16.3333   1.6667
16.9167   1.6667
* code 1203 - profile 3
    5    2    3    4
0.0000    1.6667
0.5833    1.6667
3.0833    1.2083
5.5833    0.7500
10.7917   0.7500
* code 1203 - profile 4
    7    2    4    5
0.0000    1.4583
0.5833    1.4583
1.5833    0.4583
8.4583    0.4583
15.3333   0.4583
16.3333   1.4583
16.9167   1.4583
* code 1203 - profile 5
    5    2    3    4
0.0000    1.1667
0.8334    1.1667
3.7709    1.1667
6.7084    1.1667
7.9375    1.1667
* code 1204 - assembling boxgirder
    1    2    1
    2    4    2
    4    6    2
    6    8    3
    3    5    4
    5    7    4
```

```
    2    3    5
    4    5    5
    6    7    5
* code 1205 control code
    1    2   13    1    1    0    4    2     1.0       1.0
* code 1206 wheels/axle
       0.0
       1.5
       6.0
       7.5 0.833
* code 1207 definition axles
0.0       0.5
4.0       0.5
* code 1208 - accuracy
0.00001   0.00001   0.00001   .00001    .00001
* code 1209 number sections
   33
   1A   1B   1C   1R   2L   2A   2B   2C   2R   3L   3A   3B   3C   3R
   4L   4A   4B   4C   5A   5B   5C   6A   6B   6C
   7L   7A   7B   8L   8A   8B   9L   9A   9B
* code 1210 - density conrete
0.156
* code 1211 - extra forces selfweight

* code 1212 - surcharge
1.3906
* code 1213 - Prestressing Layout - NONE
```

```
* start ; column 11-30 can be used to have your own text on the top of each page
*   5   10   15   20   25   30   35   40   45   50   55   60   65   70   75   80
*   V    V    V    V    V    V    V    V    V    V    V    V    V    V    V    V
00001  1 1     VEH: R1 - TOLL ROAD LOADING No. 1
* code 1001
Cline Avenue - Striped Lanes - Double Box Mainline - 4 Webs - 55.625' Wide
* code 1002
    2         1
* code 1003
*   5   10   15   20   25   30   35   40   45   50   55   60   65   70   75   80
*   V    V    V    V    V    V    V    V    V    V    V    V    V    V    V    V
250.0      183.0    55.625    1.0       1.0       1.3
* code 1004
    2    0    2
* code 1005
   90
* code 1005a
* location traffic lanes
17.667    29.667
* maximum and minimum truck
15.417    43.917    10.000
* code 1007, linear loads
0.7350    0.441
54.890    0.441
* code 1201
    8    5    4    2    3
* code 1202 coordinates
 0.0000   0.0000
11.0000   0.0000
11.0000   -7.9375
27.9167   0.0000
27.9167   -7.9375
44.8333   0.0000
44.8333   -7.9375
55.6250   0.0000
* code 1203 - profile 1
    5    2    3    4
0.0000    0.7500
5.4167    0.7500
7.9167    1.2083
10.4167   1.6667
11.0000   1.6667
* code 1203 - profile 2
    7    2    3    4
0.0000    1.6667
0.5833    1.6667
5.5833    0.7500
8.4583    0.7500
11.3333   0.7500
16.3333   1.6667
16.9167   1.6667
* code 1203 - profile 3
    5    2    3    4
0.0000    1.6667
0.5833    1.6667
3.0833    1.2083
5.5833    0.7500
10.7917   0.7500
* code 1203 - profile 4
    7    2    4    5
0.0000    1.4583
0.5833    1.4583
1.5833    0.4583
8.4583    0.4583
15.3333   0.4583
16.3333   1.4583
16.9167   1.4583
* code 1203 - profile 5
    5    2    3    4
0.0000    1.1667
0.8334    1.1667
3.7709    1.1667
6.7084    1.1667
7.9375    1.1667
* code 1204 - assembling boxgirder
    1    2    1
    2    4    2
    4    6    2
    6    8    3
    3    5    4
    5    7    4
```

```
    2    3    5
    4    5    5
    6    7    5
* code 1205 control code
    1    2   13    1    1    0    4    5     1.0       1.0
* code 1206 wheels/axle
       0.0
       1.5
       6.0
       7.5 0.833
* code 1207 definition axles
0.00      18.00
10.00     18.00
14.00     18.00
24.00     18.00
28.00     18.00
* code 1208 - accuracy
0.00001   0.00001   0.00001   .00001    .00001
* code 1209 number sections
   33
   1A   1B   1C   1R   2L   2A   2B   2C   2R   3L   3A   3B   3C   3R
   4L   4A   4B   4C   5A   5B   5C   6A   6B   6C
   7L   7A   7B   8L   8A   8B   9L   9A   9B
* code 1210 - density conrete
0.156
* code 1211 - extra forces selfweight

* code 1212 - surcharge
1.3906
* code 1213 - Prestressing Layout - NONE
```

```
* start ; column 11-30 can be used to have your own text on the top of each page
*   5   10   15   20   25   30   35   40   45   50   55   60   65   70   75   80
*   V    V    V    V    V    V    V    V    V    V    V    V    V    V    V    V
00001  1 1     VEH: R2 - TOLL ROAD LOADING No. 2
* code 1001
Cline Avenue - Striped Lanes - Double Box Mainline - 4 Webs - 55.625' Wide
* code 1002
    2         1
* code 1003
*   5   10   15   20   25   30   35   40   45   50   55   60   65   70   75   80
*   V    V    V    V    V    V    V    V    V    V    V    V    V    V    V    V
250.0      183.0    55.625    1.0       1.0       1.3
* code 1004
    2    0    2
* code 1005
   90
* code 1005a
* location traffic lanes
17.667    29.667
* maximum and minimum truck
15.417    43.917    10.000
* code 1007, linear loads
0.7350    0.441
54.890    0.441
* code 1201
    8    5    4    2    3
* code 1202 coordinates
 0.0000   0.0000
11.0000   0.0000
11.0000   -7.9375
27.9167   0.0000
27.9167   -7.9375
44.8333   0.0000
44.8333   -7.9375
55.6250   0.0000
* code 1203 - profile 1
    5    2    3    4
0.0000    0.7500
5.4167    0.7500
7.9167    1.2083
10.4167   1.6667
11.0000   1.6667
* code 1203 - profile 2
    7    2    3    4
0.0000    1.6667
0.5833    1.6667
5.5833    0.7500
8.4583    0.7500
11.3333   0.7500
16.3333   1.6667
16.9167   1.6667
* code 1203 - profile 3
    5    2    3    4
0.0000    1.6667
0.5833    1.6667
3.0833    1.2083
5.5833    0.7500
10.7917   0.7500
* code 1203 - profile 4
    7    2    4    5
0.0000    1.4583
0.5833    1.4583
1.5833    0.4583
8.4583    0.4583
15.3333   0.4583
16.3333   1.4583
16.9167   1.4583
* code 1203 - profile 5
    5    2    3    4
0.0000    1.1667
0.8334    1.1667
3.7709    1.1667
6.7084    1.1667
7.9375    1.1667
* code 1204 - assembling boxgirder
    1    2    1
    2    4    2
    4    6    2
    6    8    3
    3    5    4
    5    7    4
```

```
    2    3    5
    4    5    5
    6    7    5
* code 1205 control code
    1    2   13    1    1    0    4    4     1.0       1.0
* code 1206 wheels/axle
       0.0
       1.5
       6.0
       7.5 0.833
* code 1207 definition axles
0.00      22.50
14.00     22.50
23.00     22.50
37.00     22.50
* code 1208 - accuracy
0.00001   0.00001   0.00001   .00001    .00001
* code 1209 number sections
   33
   1A   1B   1C   1R   2L   2A   2B   2C   2R   3L   3A   3B   3C   3R
   4L   4A   4B   4C   5A   5B   5C   6A   6B   6C
   7L   7A   7B   8L   8A   8B   9L   9A   9B
* code 1210 - density conrete
0.156
* code 1211 - extra forces selfweight

* code 1212 - surcharge
1.3906
* code 1213 - Prestressing Layout - NONE
```

```
II_B_SL_R3_EL.txt                                                                                    9/11/2009

* start ; column 11-30 can be used to have your own text on the top of each page
*   5   10   15   20   25   30   35   40   45   50   55   60   65   70   75   80
*   V    V    V    V    V    V    V    V    V    V    V    V    V    V    V    V
00001  1 1     VEH: R3 - TOLL ROAD LOADING No. 3
* code 1001
Cline Avenue - Striped Lanes - Double Box Mainline - 4 Webs - 55.625' Wide
* code 1002
    2         1
* code 1003
*   5   10   15   20   25   30   35   40   45   50   55   60   65   70   75   80
*   V    V    V    V    V    V    V    V    V    V    V    V    V    V    V    V
250.0      183.0    55.625    1.0       1.0       1.3
* code 1004
    2    0    2
* code 1005
  126
* code 1005a
* location traffic lanes
17.667    29.667
* maximum and minimum truck
15.417    43.917    10.000
* code 1007, linear loads
0.7350    0.441
54.890    0.441
* code 1201
    8    5    4    2    3
* code 1202 coordinates
 0.0000   0.0000
11.0000   0.0000
11.0000   -7.9375
27.9167   0.0000
27.9167   -7.9375
44.8333   0.0000
44.8333   -7.9375
55.6250   0.0000
* code 1203 - profile 1
    5    2    3    4
0.0000    0.7500
5.4167    0.7500
7.9167    1.2083
10.4167   1.6667
11.0000   1.6667
* code 1203 - profile 2
    7    2    3    4
0.0000    1.6667
0.5833    1.6667
5.5833    0.7500
8.4583    0.7500
11.3333   0.7500
16.3333   1.6667
16.9167   1.6667
* code 1203 - profile 3
    5    2    3    4
0.0000    1.6667
0.5833    1.6667
3.0833    1.2083
5.5833    0.7500
10.7917   0.7500
* code 1203 - profile 4
    7    2    4    5
0.0000    1.4583
0.5833    1.4583
1.5833    0.4583
8.4583    0.4583
15.3333   0.4583
16.3333   1.4583
16.9167   1.4583
* code 1203 - profile 5
    5    2    3    4
0.0000    1.1667
0.8334    1.1667
3.7709    1.1667
6.7084    1.1667
7.9375    1.1667
* code 1204 - assembling boxgirder
    1    2    1
    2    4    2
    4    6    2
    6    8    3
    3    5    4
    5    7    4
```

```
    2    3    5
    4    5    5
    6    7    5
* code 1205 control code
    1    2   13    1    1    0    4    7     1.0       1.0
* code 1206 wheels/axle
       0.0
       1.5
       6.0
       7.5 0.833
* code 1207 definition axles
0.00      18.00
10.00     18.00
14.00     18.00
40.00     18.00
44.00     18.00
56.00     18.00
76.00     18.00
* code 1208 - accuracy
0.00001   0.00001   0.00001   .00001    .00001
* code 1209 number sections
   33
   1A   1B   1C   1R   2L   2A   2B   2C   2R   3L   3A   3B   3C   3R
   4L   4A   4B   4C   5A   5B   5C   6A   6B   6C
   7L   7A   7B   8L   8A   8B   9L   9A   9B
* code 1210 - density conrete
0.156
* code 1211 - extra forces selfweight

* code 1212 - surcharge
1.3906
* code 1213 - Prestressing Layout - NONE
```

```
* start ; column 11-30 can be used to have your own text on the top of each page
*   5   10   15   20   25   30   35   40   45   50   55   60   65   70   75   80
*   V    V    V    V    V    V    V    V    V    V    V    V    V    V    V    V
00001  1 1     VEH: R4 - MICHIGAN TRUCK TRAIN No.5
* code 1001
Cline Avenue - Striped Lanes - Double Box Mainline - 4 Webs - 55.625' Wide
* code 1002
    2         1
* code 1003
*   5   10   15   20   25   30   35   40   45   50   55   60   65   70   75   80
*   V    V    V    V    V    V    V    V    V    V    V    V    V    V    V    V
250.0      183.0    55.625    1.0       1.0       1.3
* code 1004
    2    0    2
* code 1005
  134
* code 1005a
* location traffic lanes
17.667    29.667
* maximum and minimum truck
15.417    43.917    10.000
* code 1007, linear loads
0.7350    0.441
54.890    0.441
* code 1201
    8    5    4    2    3
* code 1202 coordinates
 0.0000   0.0000
11.0000   0.0000
11.0000   -7.9375
27.9167   0.0000
27.9167   -7.9375
44.8333   0.0000
44.8333   -7.9375
55.6250   0.0000
* code 1203 - profile 1
    5    2    3    4
0.0000    0.7500
5.4167    0.7500
7.9167    1.2083
10.4167   1.6667
11.0000   1.6667
* code 1203 - profile 2
    7    2    3    4
0.0000    1.6667
0.5833    1.6667
5.5833    0.7500
8.4583    0.7500
11.3333   0.7500
16.3333   1.6667
16.9167   1.6667
* code 1203 - profile 3
    5    2    3    4
0.0000    1.6667
0.5833    1.6667
3.0833    1.2083
5.5833    0.7500
10.7917   0.7500
* code 1203 - profile 4
    7    2    4    5
0.0000    1.4583
0.5833    1.4583
1.5833    0.4583
8.4583    0.4583
15.3333   0.4583
16.3333   1.4583
16.9167   1.4583
* code 1203 - profile 5
    5    2    3    4
0.0000    1.1667
0.8334    1.1667
3.7709    1.1667
6.7084    1.1667
7.9375    1.1667
* code 1204 - assembling boxgirder
    1    2    1
    2    4    2
    4    6    2
    6    8    3
    3    5    4
    5    7    4
```

```
    2    3    5
    4    5    5
    6    7    5
* code 1205 control code
    1    2   13    1    1    0    4    8     1.0       1.0
* code 1206 wheels/axle
       0.0
       1.5
       6.0
       7.5 0.833
* code 1207 definition axles
0.00      12.00
9.00      16.00
12.50     16.00
21.50     18.00
30.50     18.00
39.50     18.00
48.50     18.00
57.50     18.00
* code 1208 - accuracy
0.00001   0.00001   0.00001   .00001    .00001
* code 1209 number sections
   33
   1A   1B   1C   1R   2L   2A   2B   2C   2R   3L   3A   3B   3C   3R
   4L   4A   4B   4C   5A   5B   5C   6A   6B   6C
   7L   7A   7B   8L   8A   8B   9L   9A   9B
* code 1210 - density conrete
0.156
* code 1211 - extra forces selfweight

* code 1212 - surcharge
1.3906
* code 1213 - Prestressing Layout - NONE
```

```
* start ; column 11-30 can be used to have your own text on the top of each page
*   5   10   15   20   25   30   35   40   45   50   55   60   65   70   75   80
*   V    V    V    V    V    V    V    V    V    V    V    V    V    V    V    V
00001  1 1     VEH: R5 - MICHIGAN TRUCK TRAIN No. 8
* code 1001
Cline Avenue - Striped Lanes - Double Box Mainline - 4 Webs - 55.625' Wide
* code 1002
    2         1
* code 1003
*   5   10   15   20   25   30   35   40   45   50   55   60   65   70   75   80
*   V    V    V    V    V    V    V    V    V    V    V    V    V    V    V    V
250.0      183.0    55.625    1.0       1.0       1.3
* code 1004
    2    0    2
* code 1005
* Vehicle weight is 134.2 Kips, rounded to 135
  135
* code 1005a
* location traffic lanes
17.667    29.667
* maximum and minimum truck
15.417    43.917    10.000
* code 1007, linear loads
0.7350    0.441
54.890    0.441
* code 1201
    8    5    4    2    3
* code 1202 coordinates
 0.0000   0.0000
11.0000   0.0000
11.0000   -7.9375
27.9167   0.0000
27.9167   -7.9375
44.8333   0.0000
44.8333   -7.9375
55.6250   0.0000
* code 1203 - profile 1
    5    2    3    4
0.0000    0.7500
5.4167    0.7500
7.9167    1.2083
10.4167   1.6667
11.0000   1.6667
* code 1203 - profile 2
    7    2    3    4
0.0000    1.6667
0.5833    1.6667
5.5833    0.7500
8.4583    0.7500
11.3333   0.7500
16.3333   1.6667
16.9167   1.6667
* code 1203 - profile 3
    5    2    3    4
0.0000    1.6667
0.5833    1.6667
3.0833    1.2083
5.5833    0.7500
10.7917   0.7500
* code 1203 - profile 4
    7    2    4    5
0.0000    1.4583
0.5833    1.4583
1.5833    0.4583
8.4583    0.4583
15.3333   0.4583
16.3333   1.4583
16.9167   1.4583
* code 1203 - profile 5
    5    2    3    4
0.0000    1.1667
0.8334    1.1667
3.7709    1.1667
6.7084    1.1667
7.9375    1.1667
* code 1204 - assembling boxgirder
    1    2    1
    2    4    2
    4    6    2
    6    8    3
    3    5    4
```

```
    5    7    4
    2    3    5
    4    5    5
    6    7    5
* code 1205 control code
    1    2   13    1    1    0    4   11     1.0       1.0
* code 1206 wheels/axle
       0.0
       1.5
       6.0
       7.5 0.833
* code 1207 definition axles
0.00      12.00
9.00      13.40
12.50     13.40
21.50     10.90
25.00     10.90
28.50     10.90
32.00     10.90
35.50     10.90
39.00     10.90
48.00     15.00
57.00     15.00
* code 1208 - accuracy
0.00001   0.00001   0.00001   .00001    .00001
* code 1209 number sections
   33
   1A   1B   1C   1R   2L   2A   2B   2C   2R   3L   3A   3B   3C   3R
   4L   4A   4B   4C   5A   5B   5C   6A   6B   6C
   7L   7A   7B   8L   8A   8B   9L   9A   9B
* code 1210 - density conrete
0.156
* code 1211 - extra forces selfweight

* code 1212 - surcharge
1.3906
* code 1213 - Prestressing Layout - NONE
```

```
II_B_SL_S1_EL.txt                                                                                    9/11/2009

* start ; column 11-30 can be used to have your own text on the top of each page
*   5   10   15   20   25   30   35   40   45   50   55   60   65   70   75   80
*   V    V    V    V    V    V    V    V    V    V    V    V    V    V    V    V
00001  1 1     VEH: S1 - SPECIAL TRUCK 11 AXLE
* code 1001
Cline Avenue - Striped Lanes - Double Box Mainline - 4 Webs - 55.625' Wide
* code 1002
    2         1
* code 1003
*   5   10   15   20   25   30   35   40   45   50   55   60   65   70   75   80
*   V    V    V    V    V    V    V    V    V    V    V    V    V    V    V    V
250.0      183.0    55.625    1.0       1.0       1.3
* code 1004
    2    0    2
* code 1005
  258
* code 1005a
* location traffic lanes
17.667    29.667
* maximum and minimum truck
15.417    43.917    10.000
* code 1007, linear loads
0.7350    0.441
54.890    0.441
* code 1201
    8    5    4    2    3
* code 1202 coordinates
 0.0000   0.0000
11.0000   0.0000
11.0000   -7.9375
27.9167   0.0000
27.9167   -7.9375
44.8333   0.0000
44.8333   -7.9375
55.6250   0.0000
* code 1203 - profile 1
    5    2    3    4
0.0000    0.7500
5.4167    0.7500
7.9167    1.2083
10.4167   1.6667
11.0000   1.6667
* code 1203 - profile 2
    7    2    3    4
0.0000    1.6667
0.5833    1.6667
5.5833    0.7500
8.4583    0.7500
11.3333   0.7500
16.3333   1.6667
16.9167   1.6667
* code 1203 - profile 3
    5    2    3    4
0.0000    1.6667
0.5833    1.6667
3.0833    1.2083
5.5833    0.7500
10.7917   0.7500
* code 1203 - profile 4
    7    2    4    5
0.0000    1.4583
0.5833    1.4583
1.5833    0.4583
8.4583    0.4583
15.3333   0.4583
16.3333   1.4583
16.9167   1.4583
* code 1203 - profile 5
    5    2    3    4
0.0000    1.1667
0.8334    1.1667
3.7709    1.1667
6.7084    1.1667
7.9375    1.1667
* code 1204 - assembling boxgirder
    1    2    1
    2    4    2
    4    6    2
    6    8    3
    3    5    4
    5    7    4
```

```
    2    3    5
    4    5    5
    6    7    5
* code 1205 control code
    1    2   13    1    1    0    4   11     1.0       1.0
* code 1206 wheels/axle
       0.0
       1.5
       6.0
       7.5 0.833
* code 1207 definition axles
0.00      12.00
11.50     24.60
16.67     24.60
21.67     24.60
34.83     24.60
39.33     24.60
89.92     24.60
94.42     24.60
98.92     24.60
112.50     24.60
117.00     24.60
* code 1208 - accuracy
0.00001   0.00001   0.00001   .00001    .00001
* code 1209 number sections
   33
   1A   1B   1C   1R   2L   2A   2B   2C   2R   3L   3A   3B   3C   3R
   4L   4A   4B   4C   5A   5B   5C   6A   6B   6C
   7L   7A   7B   8L   8A   8B   9L   9A   9B
* code 1210 - density conrete
0.156
* code 1211 - extra forces selfweight

* code 1212 - surcharge
1.3906
* code 1213 - Prestressing Layout - NONE
```

```
* start ; column 11-30 can be used to have your own text on the top of each page
*   5   10   15   20   25   30   35   40   45   50   55   60   65   70   75   80
*   V    V    V    V    V    V    V    V    V    V    V    V    V    V    V    V
00001  1 1     VEH: S2 - SPECIAL TRUCK - 13 AXLE
* code 1001
Cline Avenue - Striped Lanes - Double Box Mainline - 4 Webs - 55.625' Wide
* code 1002
    2         1
* code 1003
*   5   10   15   20   25   30   35   40   45   50   55   60   65   70   75   80
*   V    V    V    V    V    V    V    V    V    V    V    V    V    V    V    V
250.0      183.0    55.625    1.0       1.0       1.3
* code 1004
    2    0    2
* code 1005
  267
* code 1005a
* location traffic lanes
17.667    29.667
* maximum and minimum truck
15.417    43.917    10.000
* code 1007, linear loads
0.7350    0.441
54.890    0.441
* code 1201
    8    5    4    2    3
* code 1202 coordinates
 0.0000   0.0000
11.0000   0.0000
11.0000   -7.9375
27.9167   0.0000
27.9167   -7.9375
44.8333   0.0000
44.8333   -7.9375
55.6250   0.0000
* code 1203 - profile 1
    5    2    3    4
0.0000    0.7500
5.4167    0.7500
7.9167    1.2083
10.4167   1.6667
11.0000   1.6667
* code 1203 - profile 2
    7    2    3    4
0.0000    1.6667
0.5833    1.6667
5.5833    0.7500
8.4583    0.7500
11.3333   0.7500
16.3333   1.6667
16.9167   1.6667
* code 1203 - profile 3
    5    2    3    4
0.0000    1.6667
0.5833    1.6667
3.0833    1.2083
5.5833    0.7500
10.7917   0.7500
* code 1203 - profile 4
    7    2    4    5
0.0000    1.4583
0.5833    1.4583
1.5833    0.4583
8.4583    0.4583
15.3333   0.4583
16.3333   1.4583
16.9167   1.4583
* code 1203 - profile 5
    5    2    3    4
0.0000    1.1667
0.8334    1.1667
3.7709    1.1667
6.7084    1.1667
7.9375    1.1667
* code 1204 - assembling boxgirder
    1    2    1
    2    4    2
    4    6    2
    6    8    3
    3    5    4
    5    7    4
```

```
    2    3    5
    4    5    5
    6    7    5
* code 1205 control code
    1    2   13    1    1    0    4   13     1.0       1.0
* code 1206 wheels/axle
       0.0
       1.5
       6.0
       7.5 0.833
* code 1207 definition axles
0.00      15.00
16.50     21.00
21.00     21.00
25.50     21.00
39.50     21.00
44.00     21.00
48.50     21.00
96.50     21.00
101.00    21.00
105.50    21.00
121.00    21.00
125.50    21.00
130.00    21.00
* code 1208 - accuracy
0.00001   0.00001   0.00001   .00001    .00001
* code 1209 number sections
   33
   1A   1B   1C   1R   2L   2A   2B   2C   2R   3L   3A   3B   3C   3R
   4L   4A   4B   4C   5A   5B   5C   6A   6B   6C
   7L   7A   7B   8L   8A   8B   9L   9A   9B
* code 1210 - density conrete
0.156
* code 1211 - extra forces selfweight

* code 1212 - surcharge
1.3906
* code 1213 - Prestressing Layout - NONE
```

```
* start ; column 11-30 can be used to have your own text on the top of each page
*   5   10   15   20   25   30   35   40   45   50   55   60   65   70   75   80
*   V    V    V    V    V    V    V    V    V    V    V    V    V    V    V    V
00001  1 1     VEH: S3 - SPECIAL TRUCK - 14 AXLE
* code 1001
Cline Avenue - Striped Lanes - Double Box Mainline - 4 Webs - 55.625' Wide
* code 1002
    2         1
* code 1003
*   5   10   15   20   25   30   35   40   45   50   55   60   65   70   75   80
*   V    V    V    V    V    V    V    V    V    V    V    V    V    V    V    V
250.0      183.0    55.625    1.0       1.0       1.3
* code 1004
    2    0    2
* code 1005
  350
* code 1005a
* location traffic lanes
17.667    29.667
* maximum and minimum truck
15.417    43.917    10.000
* code 1007, linear loads
0.7350    0.441
54.890    0.441
* code 1201
    8    5    4    2    3
* code 1202 coordinates
 0.0000   0.0000
11.0000   0.0000
11.0000   -7.9375
27.9167   0.0000
27.9167   -7.9375
44.8333   0.0000
44.8333   -7.9375
55.6250   0.0000
* code 1203 - profile 1
    5    2    3    4
0.0000    0.7500
5.4167    0.7500
7.9167    1.2083
10.4167   1.6667
11.0000   1.6667
* code 1203 - profile 2
    7    2    3    4
0.0000    1.6667
0.5833    1.6667
5.5833    0.7500
8.4583    0.7500
11.3333   0.7500
16.3333   1.6667
16.9167   1.6667
* code 1203 - profile 3
    5    2    3    4
0.0000    1.6667
0.5833    1.6667
3.0833    1.2083
5.5833    0.7500
10.7917   0.7500
* code 1203 - profile 4
    7    2    4    5
0.0000    1.4583
0.5833    1.4583
1.5833    0.4583
8.4583    0.4583
15.3333   0.4583
16.3333   1.4583
16.9167   1.4583
* code 1203 - profile 5
    5    2    3    4
0.0000    1.1667
0.8334    1.1667
3.7709    1.1667
6.7084    1.1667
7.9375    1.1667
* code 1204 - assembling boxgirder
    1    2    1
    2    4    2
    4    6    2
    6    8    3
    3    5    4
    5    7    4
```

```
    2    3    5
    4    5    5
    6    7    5
* code 1205 control code
    1    2   13    1    1    0    4   14     1.0       1.0
* code 1206 wheels/axle
       0.0
       1.5
       6.0
       7.5 0.833
* code 1207 definition axles
0.00      13.00
14.50     25.00
19.00     25.00
23.50     25.00
50.50     23.50
54.67     23.50
58.83     23.50
102.83    23.50
107.33    28.00
111.83    28.00
116.33    28.00
132.17    28.00
136.67    28.00
141.17    28.00
* code 1208 - accuracy
0.00001   0.00001   0.00001   .00001    .00001
* code 1209 number sections
   33
   1A   1B   1C   1R   2L   2A   2B   2C   2R   3L   3A   3B   3C   3R
   4L   4A   4B   4C   5A   5B   5C   6A   6B   6C
   7L   7A   7B   8L   8A   8B   9L   9A   9B
* code 1210 - density conrete
0.156
* code 1211 - extra forces selfweight

* code 1212 - surcharge
1.3906
* code 1213 - Prestressing Layout - NONE
```

```
II_B_SL_S4_EL.txt                                                                                    9/11/2009

* start ; column 11-30 can be used to have your own text on the top of each page
*   5   10   15   20   25   30   35   40   45   50   55   60   65   70   75   80
*   V    V    V    V    V    V    V    V    V    V    V    V    V    V    V    V
00001  1 1     VEH: S4 - SUPER LOAD -19 AXLES
* code 1001
Cline Avenue - Striped Lanes - Double Box Mainline - 4 Webs - 55.625' Wide
* code 1002
    2         1
* code 1003
*   5   10   15   20   25   30   35   40   45   50   55   60   65   70   75   80
*   V    V    V    V    V    V    V    V    V    V    V    V    V    V    V    V
250.0      183.0    55.625    1.0       1.0       1.3
* code 1004
    2    0    2
* code 1005
  305
* code 1005a
* location traffic lanes
17.667    29.667
* maximum and minimum truck
15.417    43.917    10.000
* code 1007, linear loads
0.7350    0.441
54.890    0.441
* code 1201
    8    5    4    2    3
* code 1202 coordinates
 0.0000   0.0000
11.0000   0.0000
11.0000   -7.9375
27.9167   0.0000
27.9167   -7.9375
44.8333   0.0000
44.8333   -7.9375
55.6250   0.0000
* code 1203 - profile 1
    5    2    3    4
0.0000    0.7500
5.4167    0.7500
7.9167    1.2083
10.4167   1.6667
11.0000   1.6667
* code 1203 - profile 2
    7    2    3    4
0.0000    1.6667
0.5833    1.6667
5.5833    0.7500
8.4583    0.7500
11.3333   0.7500
16.3333   1.6667
16.9167   1.6667
* code 1203 - profile 3
    5    2    3    4
0.0000    1.6667
0.5833    1.6667
3.0833    1.2083
5.5833    0.7500
10.7917   0.7500
* code 1203 - profile 4
    7    2    4    5
0.0000    1.4583
0.5833    1.4583
1.5833    0.4583
8.4583    0.4583
15.3333   0.4583
16.3333   1.4583
16.9167   1.4583
* code 1203 - profile 5
    5    2    3    4
0.0000    1.1667
0.8334    1.1667
3.7709    1.1667
6.7084    1.1667
7.9375    1.1667
* code 1204 - assembling boxgirder
    1    2    1
    2    4    2
    4    6    2
    6    8    3
    3    5    4
    5    7    4
```

```
    2    3    5
    4    5    5
    6    7    5
* code 1205 control code
    1    2   13    1    1    0    4   19     1.0       1.0
* code 1206 wheels/axle
       0.0
       1.5
       6.0
       7.5 0.833
* code 1207 definition axles
0.00      13.00
13.50     16.48
17.83     16.48
31.33     16.48
35.42     15.99
39.50     15.99
45.50     15.99
49.58     16.37
53.67     16.37
103.58    16.37
107.67    16.64
114.17    16.64
118.25    15.15
122.33    15.15
126.42    15.15
135.92    15.15
140.00    17.20
144.08    17.20
148.17    17.20
* code 1208 - accuracy
0.00001   0.00001   0.00001   .00001    .00001
* code 1209 number sections
   33
   1A   1B   1C   1R   2L   2A   2B   2C   2R   3L   3A   3B   3C   3R
   4L   4A   4B   4C   5A   5B   5C   6A   6B   6C
   7L   7A   7B   8L   8A   8B   9L   9A   9B
* code 1210 - density conrete
0.156
* code 1211 - extra forces selfweight

* code 1212 - surcharge
1.3906
* code 1213 - Prestressing Layout - NONE
```

```
II_B_SL_S5_EL.txt                                                                                    9/11/2009

* start ; column 11-30 can be used to have your own text on the top of each page
*   5   10   15   20   25   30   35   40   45   50   55   60   65   70   75   80
*   V    V    V    V    V    V    V    V    V    V    V    V    V    V    V    V
00001  1 1     VEH: S5 - SUPERLOAD - 19 AXLE
* code 1001
Cline Avenue - Striped Lanes - Double Box Mainline - 4 Webs - 55.625' Wide
* code 1002
    2         1
* code 1003
*   5   10   15   20   25   30   35   40   45   50   55   60   65   70   75   80
*   V    V    V    V    V    V    V    V    V    V    V    V    V    V    V    V
250.0      183.0    55.625    1.0       1.0       1.3
* code 1004
    2    0    2
* code 1005
  480
* code 1005a
* location traffic lanes
17.667    29.667
* maximum and minimum truck
15.417    43.917    10.000
* code 1007, linear loads
0.7350    0.441
54.890    0.441
* code 1201
    8    5    4    2    3
* code 1202 coordinates
 0.0000   0.0000
11.0000   0.0000
11.0000   -7.9375
27.9167   0.0000
27.9167   -7.9375
44.8333   0.0000
44.8333   -7.9375
55.6250   0.0000
* code 1203 - profile 1
    5    2    3    4
0.0000    0.7500
5.4167    0.7500
7.9167    1.2083
10.4167   1.6667
11.0000   1.6667
* code 1203 - profile 2
    7    2    3    4
0.0000    1.6667
0.5833    1.6667
5.5833    0.7500
8.4583    0.7500
11.3333   0.7500
16.3333   1.6667
16.9167   1.6667
* code 1203 - profile 3
    5    2    3    4
0.0000    1.6667
0.5833    1.6667
3.0833    1.2083
5.5833    0.7500
10.7917   0.7500
* code 1203 - profile 4
    7    2    4    5
0.0000    1.4583
0.5833    1.4583
1.5833    0.4583
8.4583    0.4583
15.3333   0.4583
16.3333   1.4583
16.9167   1.4583
* code 1203 - profile 5
    5    2    3    4
0.0000    1.1667
0.8334    1.1667
3.7709    1.1667
6.7084    1.1667
7.9375    1.1667
* code 1204 - assembling boxgirder
    1    2    1
    2    4    2
    4    6    2
    6    8    3
    3    5    4
    5    7    4
```

```
    2    3    5
    4    5    5
    6    7    5
* code 1205 control code
    1    2   13    1    1    0    4   19     1.0       1.0
* code 1206 wheels/axle
       0.0
       1.5
       6.0
       7.5 0.833
* code 1207 definition axles
0.00      12.88
12.50     25.95
17.50     25.95
31.58     25.95
36.58     25.95
41.58     25.95
55.67     25.95
60.67     25.95
65.67     25.95
115.67    25.95
120.67    25.95
125.67    25.95
139.75    25.95
144.75    25.95
149.75    25.95
163.83    25.95
168.83    25.95
173.83    25.95
178.83    25.95
* code 1208 - accuracy
0.00001   0.00001   0.00001   .00001    .00001
* code 1209 number sections
   33
   1A   1B   1C   1R   2L   2A   2B   2C   2R   3L   3A   3B   3C   3R
   4L   4A   4B   4C   5A   5B   5C   6A   6B   6C
   7L   7A   7B   8L   8A   8B   9L   9A   9B
* code 1210 - density conrete
0.156
* code 1211 - extra forces selfweight

* code 1212 - surcharge
1.3906
* code 1213 - Prestressing Layout - NONE
```

4.5.3 Brug Output AASHTO Lanes (Summary)

1II_B_HL93_truck_EL.OUT 9/11/2009

VEH: HL93- TRUCK - S BRUG(5.75.44) page 43
date 11/09/2009; time 13:23:22
Cline Avenue - Load Rating - Double Box Mainline - 4 Webs -

Summary of the results (Maximum)

Section	--- Deadload ---- Moment	Ax.Frc	----- P.T. ------ Moment	Ax.Frc	--- Live load --- Moment	Ax.Frc
1 a	-3.85	0.44	0.00	0.00	1.38	0.08
1 b	-7.41	0.98	0.00	0.00	1.00	0.22
1 c	-12.28	1.82	0.00	0.00	-0.02	0.09
1 right	-13.64	2.07	0.00	0.00	-0.02	0.10
2 left	-4.14	3.16	0.00	0.00	-0.73	2.35
2 a	-3.35	2.99	0.00	0.00	0.99	1.61
2 b	0.30	2.25	0.00	0.00	3.82	0.15
2 c	0.27	2.29	0.00	0.00	4.03	-0.28
2 right	-7.67	4.20	0.00	0.00	0.65	0.56
3 left	-7.70	4.20	0.00	0.00	0.65	0.57
3 a	-6.66	3.95	0.00	0.00	0.72	1.02
3 b	-0.91	2.56	0.00	0.00	3.40	0.09
3 c	0.30	2.24	0.00	0.00	4.03	-0.28
3 right	-4.05	3.07	0.00	0.00	-0.73	2.03
4 left	-13.26	2.02	0.00	0.00	-0.02	0.10
4 a	-11.91	1.77	0.00	0.00	-0.02	0.09
4 b	-7.11	0.94	0.00	0.00	1.00	0.21
4 c	-3.62	0.41	0.00	0.00	1.36	0.07
5 a	-0.45	-0.80	0.00	0.00	0.92	-1.32
5 b	0.93	1.31	0.00	0.00	0.04	-0.18
5 c	-1.52	1.10	0.00	0.00	0.39	-0.06
6 a	-2.19	0.89	0.00	0.00	0.46	-0.12
6 b	0.93	1.33	0.00	0.00	0.04	-0.15
6 c	-0.01	-0.34	0.00	0.00	0.75	-1.05
7 top	-9.51	-3.84	0.00	0.00	4.05	-1.68
7 a	-8.59	-3.34	0.00	0.00	3.46	-1.46
7 b	-5.37	-1.50	0.00	0.00	1.85	-0.71
8 top	0.03	-3.68	0.00	0.00	6.32	-1.85
8 a	0.02	-3.09	0.00	0.00	5.39	-1.62
8 b	0.02	-0.89	0.00	0.00	2.59	-0.84
9 top	9.21	-3.80	0.00	0.00	10.97	-6.54
9 a	8.32	-3.31	0.00	0.00	9.29	-5.57
9 b	5.22	-1.48	0.00	0.00	4.64	-2.59

1II_B_HL93_truck_EL.OUT 9/11/2009

VEH: HL93- TRUCK - S BRUG(5.75.44) page 44
date 11/09/2009; time 13:23:22
Cline Avenue - Load Rating - Double Box Mainline - 4 Webs -

Summary of the results (Minimum)

Section	--- Deadload ---- Moment	Ax.Frc	----- P.T. ------ Moment	Ax.Frc	--- Live load --- Moment	Ax.Frc
1 a	-3.85	0.44	0.00	0.00	-1.18	0.06
1 b	-7.41	0.98	0.00	0.00	-6.13	0.18
1 c	-12.28	1.82	0.00	0.00	-10.13	0.56
1 right	-13.64	2.07	0.00	0.00	-12.98	0.79
2 left	-4.14	3.16	0.00	0.00	-5.78	-0.03
2 a	-3.35	2.99	0.00	0.00	-5.09	-0.10
2 b	0.30	2.25	0.00	0.00	-0.37	0.08
2 c	0.27	2.29	0.00	0.00	-0.62	0.76
2 right	-7.67	4.20	0.00	0.00	-7.67	-0.10
3 left	-7.70	4.20	0.00	0.00	-7.68	-0.10
3 a	-6.66	3.95	0.00	0.00	-6.87	-0.17
3 b	-0.91	2.56	0.00	0.00	-1.50	-0.27
3 c	0.30	2.24	0.00	0.00	-0.59	0.73
3 right	-4.05	3.07	0.00	0.00	-5.78	-0.04
4 left	-13.26	2.02	0.00	0.00	-12.28	0.80
4 a	-11.91	1.77	0.00	0.00	-9.86	0.57
4 b	-7.11	0.94	0.00	0.00	-6.01	0.17
4 c	-3.62	0.41	0.00	0.00	-0.89	0.06
5 a	-0.45	-0.80	0.00	0.00	-0.39	0.19
5 b	0.93	1.31	0.00	0.00	-0.04	0.69
5 c	-1.52	1.10	0.00	0.00	-0.66	0.32
6 a	-2.19	0.89	0.00	0.00	-0.76	0.39
6 b	0.93	1.33	0.00	0.00	-0.04	0.69
6 c	-0.01	-0.34	0.00	0.00	-0.34	0.19
7 top	-9.51	-3.84	0.00	0.00	-11.35	-6.46
7 a	-8.59	-3.34	0.00	0.00	-9.61	-5.51
7 b	-5.37	-1.50	0.00	0.00	-4.79	-2.57
8 top	0.03	-3.68	0.00	0.00	-6.31	-1.85
8 a	0.02	-3.09	0.00	0.00	-5.38	-1.62
8 b	0.02	-0.89	0.00	0.00	-2.59	-0.84
9 top	9.21	-3.80	0.00	0.00	-4.05	-1.68
9 a	8.32	-3.31	0.00	0.00	-3.46	-1.46
9 b	5.22	-1.48	0.00	0.00	-1.85	-0.71

VEH: HL93- TANDEM - BRUG(5.75.44) page 43
date 11/09/2009; time 13:23:22
Cline Avenue - Load Rating - Double Box Mainline - 4 Webs -

Summary of the results (Maximum)

Section	--- Deadload ---- Moment	Ax.Frc	----- P.T. ------ Moment	Ax.Frc	--- Live load --- Moment	Ax.Frc
1 a	-3.85	0.44	0.00	0.00	1.13	0.09
1 b	-7.41	0.98	0.00	0.00	0.65	0.30
1 c	-12.28	1.82	0.00	0.00	-0.02	0.06
1 right	-13.64	2.07	0.00	0.00	-0.02	0.07
2 left	-4.14	3.16	0.00	0.00	-0.61	-0.03
2 a	-3.35	2.99	0.00	0.00	-0.58	1.59
2 b	0.30	2.25	0.00	0.00	3.42	0.10
2 c	0.27	2.29	0.00	0.00	3.82	-0.30
2 right	-7.67	4.20	0.00	0.00	0.60	0.35
3 left	-7.70	4.20	0.00	0.00	0.61	0.36
3 a	-6.66	3.95	0.00	0.00	0.54	0.34
3 b	-0.91	2.56	0.00	0.00	3.12	0.07
3 c	0.30	2.24	0.00	0.00	3.82	-0.30
3 right	-4.05	3.07	0.00	0.00	-0.60	-0.03
4 left	-13.26	2.02	0.00	0.00	-0.02	0.07
4 a	-11.91	1.77	0.00	0.00	-0.02	0.06
4 b	-7.11	0.94	0.00	0.00	0.64	0.29
4 c	-3.62	0.41	0.00	0.00	1.11	0.08
5 a	-0.45	-0.80	0.00	0.00	0.76	-1.19
5 b	0.93	1.31	0.00	0.00	0.03	-0.04
5 c	-1.52	1.10	0.00	0.00	0.30	-0.35
6 a	-2.19	0.89	0.00	0.00	0.40	-0.37
6 b	0.93	1.33	0.00	0.00	0.03	-0.02
6 c	-0.01	-0.34	0.00	0.00	0.58	-0.88
7 top	-9.51	-3.84	0.00	0.00	4.54	-2.53
7 a	-8.59	-3.34	0.00	0.00	3.53	-1.73
7 b	-5.37	-1.50	0.00	0.00	1.77	-0.88
8 top	0.03	-3.68	0.00	0.00	6.19	-2.72
8 a	0.02	-3.09	0.00	0.00	5.20	-2.42
8 b	0.02	-0.89	0.00	0.00	2.26	-1.04
9 top	9.21	-3.80	0.00	0.00	10.12	-6.25
9 a	8.32	-3.31	0.00	0.00	8.54	-5.51
9 b	5.22	-1.48	0.00	0.00	4.12	-2.87

VEH: HL93- TANDEM - BRUG(5.75.44) page 44
date 11/09/2009; time 13:23:22
Cline Avenue - Load Rating - Double Box Mainline - 4 Webs -

Summary of the results (Minimum)

Section	--- Deadload ---- Moment	Ax.Frc	----- P.T. ------ Moment	Ax.Frc	--- Live load --- Moment	Ax.Frc
1 a	-3.85	0.44	0.00	0.00	-1.57	0.06
1 b	-7.41	0.98	0.00	0.00	-6.50	0.21
1 c	-12.28	1.82	0.00	0.00	-11.14	0.65
1 right	-13.64	2.07	0.00	0.00	-13.64	0.83
2 left	-4.14	3.16	0.00	0.00	-6.95	0.15
2 a	-3.35	2.99	0.00	0.00	-6.09	-0.06
2 b	0.30	2.25	0.00	0.00	-0.58	0.94
2 c	0.27	2.29	0.00	0.00	-0.54	0.62
2 right	-7.67	4.20	0.00	0.00	-8.37	0.11
3 left	-7.70	4.20	0.00	0.00	-8.38	0.11
3 a	-6.66	3.95	0.00	0.00	-7.42	-0.11
3 b	-0.91	2.56	0.00	0.00	-1.30	-0.28
3 c	0.30	2.24	0.00	0.00	-0.51	0.59
3 right	-4.05	3.07	0.00	0.00	-6.95	0.14
4 left	-13.26	2.02	0.00	0.00	-13.04	0.84
4 a	-11.91	1.77	0.00	0.00	-10.85	0.65
4 b	-7.11	0.94	0.00	0.00	-6.36	0.21
4 c	-3.62	0.41	0.00	0.00	-1.30	0.06
5 a	-0.45	-0.80	0.00	0.00	-0.29	0.12
5 b	0.93	1.31	0.00	0.00	-0.03	0.68
5 c	-1.52	1.10	0.00	0.00	-0.48	0.31
6 a	-2.19	0.89	0.00	0.00	-0.56	0.36
6 b	0.93	1.33	0.00	0.00	-0.03	0.68
6 c	-0.01	-0.34	0.00	0.00	-0.25	0.12
7 top	-9.51	-3.84	0.00	0.00	-10.46	-6.22
7 a	-8.59	-3.34	0.00	0.00	-8.83	-5.48
7 b	-5.37	-1.50	0.00	0.00	-4.26	-2.86
8 top	0.03	-3.68	0.00	0.00	-6.19	-2.72
8 a	0.02	-3.09	0.00	0.00	-5.19	-2.42
8 b	0.02	-0.89	0.00	0.00	-2.26	-1.04
9 top	9.21	-3.80	0.00	0.00	-4.54	-2.53
9 a	8.32	-3.31	0.00	0.00	-3.53	-1.73
9 b	5.22	-1.48	0.00	0.00	-1.77	-0.88

VEH: R1 - TOLL ROAD BRUG(5.75.44) page 43
date 11/09/2009; time 13:23:23
Cline Avenue - Load Rating - Double Box Mainline - 4 Webs -

Summary of the results (Maximum)

Section	--- Deadload ----		----- P.T. ------		--- Live load ---	
	Moment	Ax.Frc	Moment	Ax.Frc	Moment	Ax.Frc
1 a	-3.85	0.44	0.00	0.00	0.57	0.12
1 b	-7.41	0.98	0.00	0.00	0.37	0.29
1 c	-12.28	1.82	0.00	0.00	-0.02	0.11
1 right	-13.64	2.07	0.00	0.00	-0.03	0.12
2 left	-4.14	3.16	0.00	0.00	0.34	2.05
2 a	-3.35	2.99	0.00	0.00	1.30	1.72
2 b	0.30	2.25	0.00	0.00	3.48	0.22
2 c	0.27	2.29	0.00	0.00	3.46	-0.32
2 right	-7.67	4.20	0.00	0.00	0.80	0.69
3 left	-7.70	4.20	0.00	0.00	0.80	0.70
3 a	-6.66	3.95	0.00	0.00	0.97	1.12
3 b	-0.91	2.56	0.00	0.00	2.95	0.14
3 c	0.30	2.24	0.00	0.00	3.46	-0.32
3 right	-4.05	3.07	0.00	0.00	0.34	2.04
4 left	-13.26	2.02	0.00	0.00	-0.03	0.12
4 a	-11.91	1.77	0.00	0.00	-0.02	0.11
4 b	-7.11	0.94	0.00	0.00	0.37	0.28
4 c	-3.62	0.41	0.00	0.00	0.56	0.12
5 a	-0.45	-0.80	0.00	0.00	1.09	-1.59
5 b	0.93	1.31	0.00	0.00	0.05	-0.23
5 c	-1.52	1.10	0.00	0.00	0.47	-0.05
6 a	-2.19	0.89	0.00	0.00	0.56	-0.12
6 b	0.93	1.33	0.00	0.00	0.05	-0.20
6 c	-0.01	-0.34	0.00	0.00	0.91	-1.30
7 top	-9.51	-3.84	0.00	0.00	4.58	-1.40
7 a	-8.59	-3.34	0.00	0.00	4.02	-1.23
7 b	-5.37	-1.50	0.00	0.00	2.24	-0.64
8 top	0.03	-3.68	0.00	0.00	7.33	-1.61
8 a	0.02	-3.09	0.00	0.00	6.35	-1.43
8 b	0.02	-0.89	0.00	0.00	3.14	-0.78
9 top	9.21	-3.80	0.00	0.00	12.46	-4.46
9 a	8.32	-3.31	0.00	0.00	10.83	-3.91
9 b	5.22	-1.48	0.00	0.00	5.62	-2.05

VEH: R1 - TOLL ROAD BRUG(5.75.44) page 44
date 11/09/2009; time 13:23:23
Cline Avenue - Load Rating - Double Box Mainline - 4 Webs -

Summary of the results (Minimum)

Section	--- Deadload ----		----- P.T. ------		--- Live load ---	
	Moment	Ax.Frc	Moment	Ax.Frc	Moment	Ax.Frc
1 a	-3.85	0.44	0.00	0.00	-2.16	0.12
1 b	-7.41	0.98	0.00	0.00	-6.58	0.27
1 c	-12.28	1.82	0.00	0.00	-11.33	0.61
1 right	-13.64	2.07	0.00	0.00	-13.52	0.74
2 left	-4.14	3.16	0.00	0.00	-5.37	-0.15
2 a	-3.35	2.99	0.00	0.00	-4.78	-0.19
2 b	0.30	2.25	0.00	0.00	-0.45	0.10
2 c	0.27	2.29	0.00	0.00	-0.76	0.94
2 right	-7.67	4.20	0.00	0.00	-7.71	-0.25
3 left	-7.70	4.20	0.00	0.00	-7.72	-0.25
3 a	-6.66	3.95	0.00	0.00	-6.96	-0.29
3 b	-0.91	2.56	0.00	0.00	-1.43	-0.18
3 c	0.30	2.24	0.00	0.00	-0.72	0.90
3 right	-4.05	3.07	0.00	0.00	-5.37	-0.16
4 left	-13.26	2.02	0.00	0.00	-12.87	0.74
4 a	-11.91	1.77	0.00	0.00	-10.93	0.60
4 b	-7.11	0.94	0.00	0.00	-6.34	0.27
4 c	-3.62	0.41	0.00	0.00	-1.85	0.11
5 a	-0.45	-0.80	0.00	0.00	-0.48	0.23
5 b	0.93	1.31	0.00	0.00	-0.05	0.83
5 c	-1.52	1.10	0.00	0.00	-0.81	0.39
6 a	-2.19	0.89	0.00	0.00	-0.93	0.48
6 b	0.93	1.33	0.00	0.00	-0.05	0.83
6 c	-0.01	-0.34	0.00	0.00	-0.42	0.23
7 top	-9.51	-3.84	0.00	0.00	-12.86	-4.45
7 a	-8.59	-3.34	0.00	0.00	-11.18	-3.90
7 b	-5.37	-1.50	0.00	0.00	-5.81	-2.05
8 top	0.03	-3.68	0.00	0.00	-7.33	-1.61
8 a	0.02	-3.09	0.00	0.00	-6.35	-1.43
8 b	0.02	-0.89	0.00	0.00	-3.14	-0.78
9 top	9.21	-3.80	0.00	0.00	-4.58	-1.40
9 a	8.32	-3.31	0.00	0.00	-4.01	-1.23
9 b	5.22	-1.48	0.00	0.00	-2.24	-0.64

VEH: R2 - TOLL ROAD BRUG(5.75.44) page 43
date 11/09/2009; time 13:23:24
Cline Avenue - Load Rating - Double Box Mainline - 4 Webs -

Summary of the results (Maximum)

Section	--- Deadload ----		----- P.T. ------		--- Live load ---	
	Moment	Ax.Frc	Moment	Ax.Frc	Moment	Ax.Frc
1 a	-3.85	0.44	0.00	0.00	0.90	0.09
1 b	-7.41	0.98	0.00	0.00	0.69	0.20
1 c	-12.28	1.82	0.00	0.00	-0.02	0.11
1 right	-13.64	2.07	0.00	0.00	-0.02	0.12
2 left	-4.14	3.16	0.00	0.00	0.72	1.81
2 a	-3.35	2.99	0.00	0.00	1.86	1.47
2 b	0.30	2.25	0.00	0.00	3.41	0.20
2 c	0.27	2.29	0.00	0.00	3.36	-0.27
2 right	-7.67	4.20	0.00	0.00	0.82	1.15
3 left	-7.70	4.20	0.00	0.00	0.82	1.16
3 a	-6.66	3.95	0.00	0.00	1.28	0.94
3 b	-0.91	2.56	0.00	0.00	2.92	0.10
3 c	0.30	2.24	0.00	0.00	3.36	-0.27
3 right	-4.05	3.07	0.00	0.00	0.72	1.80
4 left	-13.26	2.02	0.00	0.00	-0.02	0.12
4 a	-11.91	1.77	0.00	0.00	-0.02	0.11
4 b	-7.11	0.94	0.00	0.00	0.69	0.19
4 c	-3.62	0.41	0.00	0.00	0.90	0.08
5 a	-0.45	-0.80	0.00	0.00	1.00	-1.39
5 b	0.93	1.31	0.00	0.00	0.04	-0.26
5 c	-1.52	1.10	0.00	0.00	0.44	-0.05
6 a	-2.19	0.89	0.00	0.00	0.51	-0.11
6 b	0.93	1.33	0.00	0.00	0.04	-0.23
6 c	-0.01	-0.34	0.00	0.00	0.84	-1.15
7 top	-9.51	-3.84	0.00	0.00	3.79	-1.20
7 a	-8.59	-3.34	0.00	0.00	3.32	-1.04
7 b	-5.37	-1.50	0.00	0.00	1.87	-0.53
8 top	0.03	-3.68	0.00	0.00	6.44	-1.36
8 a	0.02	-3.09	0.00	0.00	5.58	-1.20
8 b	0.02	-0.89	0.00	0.00	2.76	-0.64
9 top	9.21	-3.80	0.00	0.00	10.85	-4.71
9 a	8.32	-3.31	0.00	0.00	9.40	-3.97
9 b	5.22	-1.48	0.00	0.00	4.88	-1.82

VEH: R2 - TOLL ROAD BRUG(5.75.44) page 44
date 11/09/2009; time 13:23:24
Cline Avenue - Load Rating - Double Box Mainline - 4 Webs -

Summary of the results (Minimum)

Section	--- Deadload ----		----- P.T. ------		--- Live load ---	
	Moment	Ax.Frc	Moment	Ax.Frc	Moment	Ax.Frc
1 a	-3.85	0.44	0.00	0.00	-1.38	0.08
1 b	-7.41	0.98	0.00	0.00	-5.50	0.18
1 c	-12.28	1.82	0.00	0.00	-9.12	0.46
1 right	-13.64	2.07	0.00	0.00	-11.43	0.63
2 left	-4.14	3.16	0.00	0.00	-4.39	-0.13
2 a	-3.35	2.99	0.00	0.00	-3.91	-0.17
2 b	0.30	2.25	0.00	0.00	-0.42	0.11
2 c	0.27	2.29	0.00	0.00	-0.64	0.83
2 right	-7.67	4.20	0.00	0.00	-6.52	-0.23
3 left	-7.70	4.20	0.00	0.00	-6.52	-0.24
3 a	-6.66	3.95	0.00	0.00	-5.89	-0.27
3 b	-0.91	2.56	0.00	0.00	-1.34	-0.13
3 c	0.30	2.24	0.00	0.00	-0.61	0.79
3 right	-4.05	3.07	0.00	0.00	-4.39	-0.14
4 left	-13.26	2.02	0.00	0.00	-10.80	0.63
4 a	-11.91	1.77	0.00	0.00	-8.83	0.46
4 b	-7.11	0.94	0.00	0.00	-5.34	0.18
4 c	-3.62	0.41	0.00	0.00	-1.11	0.08
5 a	-0.45	-0.80	0.00	0.00	-0.45	0.23
5 b	0.93	1.31	0.00	0.00	-0.04	0.70
5 c	-1.52	1.10	0.00	0.00	-0.76	0.30
6 a	-2.19	0.89	0.00	0.00	-0.87	0.38
6 b	0.93	1.33	0.00	0.00	-0.04	0.70
6 c	-0.01	-0.34	0.00	0.00	-0.39	0.23
7 top	-9.51	-3.84	0.00	0.00	-11.20	-4.65
7 a	-8.59	-3.34	0.00	0.00	-9.70	-3.92
7 b	-5.37	-1.50	0.00	0.00	-5.04	-1.81
8 top	0.03	-3.68	0.00	0.00	-6.43	-1.36
8 a	0.02	-3.09	0.00	0.00	-5.57	-1.20
8 b	0.02	-0.89	0.00	0.00	-2.75	-0.64
9 top	9.21	-3.80	0.00	0.00	-3.78	-1.20
9 a	8.32	-3.31	0.00	0.00	-3.32	-1.04
9 b	5.22	-1.48	0.00	0.00	-1.87	-0.53

1II_B_R3_EL.OUT 9/11/2009

VEH: R3 - TOLL ROAD BRUG(5.75.44) page 43
date 11/09/2009; time 13:23:24
Cline Avenue - Load Rating - Double Box Mainline - 4 Webs -

Summary of the results (Maximum)

Section	--- Deadload ----		----- P.T. ------		--- Live load ---	
	Moment	Ax.Frc	Moment	Ax.Frc	Moment	Ax.Frc
1 a	-3.85	0.44	0.00	0.00	0.76	0.04
1 b	-7.41	0.98	0.00	0.00	0.49	0.16
1 c	-12.28	1.82	0.00	0.00	-0.02	0.15
1 right	-13.64	2.07	0.00	0.00	-0.03	0.17
2 left	-4.14	3.16	0.00	0.00	1.01	1.77
2 a	-3.35	2.99	0.00	0.00	1.98	1.48
2 b	0.30	2.25	0.00	0.00	3.41	0.21
2 c	0.27	2.29	0.00	0.00	3.12	-0.32
2 right	-7.67	4.20	0.00	0.00	0.80	0.96
3 left	-7.70	4.20	0.00	0.00	0.80	0.96
3 a	-6.66	3.95	0.00	0.00	1.31	0.79
3 b	-0.91	2.56	0.00	0.00	2.88	-0.06
3 c	0.30	2.24	0.00	0.00	3.12	-0.33
3 right	-4.05	3.07	0.00	0.00	1.01	1.77
4 left	-13.26	2.02	0.00	0.00	-0.03	0.16
4 a	-11.91	1.77	0.00	0.00	-0.02	0.14
4 b	-7.11	0.94	0.00	0.00	0.49	0.15
4 c	-3.62	0.41	0.00	0.00	0.75	0.04
5 a	-0.45	-0.80	0.00	0.00	1.13	-1.44
5 b	0.93	1.31	0.00	0.00	0.04	-0.38
5 c	-1.52	1.10	0.00	0.00	0.49	-0.11
6 a	-2.19	0.89	0.00	0.00	0.58	-0.19
6 b	0.93	1.33	0.00	0.00	0.03	-0.35
6 c	-0.01	-0.34	0.00	0.00	0.95	-1.19
7 top	-9.51	-3.84	0.00	0.00	3.68	-1.44
7 a	-8.59	-3.34	0.00	0.00	3.17	-1.27
7 b	-5.37	-1.50	0.00	0.00	1.71	-0.66
8 top	0.03	-3.68	0.00	0.00	6.88	-1.57
8 a	0.02	-3.09	0.00	0.00	5.90	-1.39
8 b	0.02	-0.89	0.00	0.00	2.82	-0.76
9 top	9.21	-3.80	0.00	0.00	11.25	-4.38
9 a	8.32	-3.31	0.00	0.00	9.68	-3.85
9 b	5.22	-1.48	0.00	0.00	4.86	-2.03

1II_B_R3_EL.OUT 9/11/2009

VEH: R3 - TOLL ROAD BRUG(5.75.44) page 44
date 11/09/2009; time 13:23:24
Cline Avenue - Load Rating - Double Box Mainline - 4 Webs -

Summary of the results (Minimum)

Section	--- Deadload ----		----- P.T. ------		--- Live load ---	
	Moment	Ax.Frc	Moment	Ax.Frc	Moment	Ax.Frc
1 a	-3.85	0.44	0.00	0.00	-1.47	0.03
1 b	-7.41	0.98	0.00	0.00	-5.36	0.11
1 c	-12.28	1.82	0.00	0.00	-9.20	0.37
1 right	-13.64	2.07	0.00	0.00	-11.22	0.49
2 left	-4.14	3.16	0.00	0.00	-4.70	-0.11
2 a	-3.35	2.99	0.00	0.00	-4.20	-0.16
2 b	0.30	2.25	0.00	0.00	-0.81	-0.20
2 c	0.27	2.29	0.00	0.00	-0.57	0.81
2 right	-7.67	4.20	0.00	0.00	-6.89	-0.25
3 left	-7.70	4.20	0.00	0.00	-6.89	-0.26
3 a	-6.66	3.95	0.00	0.00	-6.26	-0.29
3 b	-0.91	2.56	0.00	0.00	-1.58	-0.09
3 c	0.30	2.24	0.00	0.00	-0.54	0.78
3 right	-4.05	3.07	0.00	0.00	-4.69	-0.12
4 left	-13.26	2.02	0.00	0.00	-10.69	0.50
4 a	-11.91	1.77	0.00	0.00	-8.93	0.37
4 b	-7.11	0.94	0.00	0.00	-5.21	0.11
4 c	-3.62	0.41	0.00	0.00	-1.23	0.03
5 a	-0.45	-0.80	0.00	0.00	-0.51	0.28
5 b	0.93	1.31	0.00	0.00	-0.04	0.70
5 c	-1.52	1.10	0.00	0.00	-0.86	0.16
6 a	-2.19	0.89	0.00	0.00	-0.99	0.23
6 b	0.93	1.33	0.00	0.00	-0.04	0.70
6 c	-0.01	-0.34	0.00	0.00	-0.44	0.28
7 top	-9.51	-3.84	0.00	0.00	-11.58	-4.35
7 a	-8.59	-3.34	0.00	0.00	-9.96	-3.83
7 b	-5.37	-1.50	0.00	0.00	-5.01	-2.02
8 top	0.03	-3.68	0.00	0.00	-6.87	-1.57
8 a	0.02	-3.09	0.00	0.00	-5.89	-1.39
8 b	0.02	-0.89	0.00	0.00	-2.81	-0.76
9 top	9.21	-3.80	0.00	0.00	-3.68	-1.44
9 a	8.32	-3.31	0.00	0.00	-3.17	-1.27
9 b	5.22	-1.48	0.00	0.00	-1.71	-0.66

VEH: R4 - MICHIGAN T BRUG(5.75.44) page 43
date 11/09/2009; time 13:23:25
Cline Avenue - Load Rating - Double Box Mainline - 4 Webs -

Summary of the results (Maximum)

Section	--- Deadload ----		----- P.T. ------		--- Live load ---	
	Moment	Ax.Frc	Moment	Ax.Frc	Moment	Ax.Frc
1 a	-3.85	0.44	0.00	0.00	0.58	0.09
1 b	-7.41	0.98	0.00	0.00	0.50	0.19
1 c	-12.28	1.82	0.00	0.00	0.22	0.34
1 right	-13.64	2.07	0.00	0.00	0.02	0.38
2 left	-4.14	3.16	0.00	0.00	2.58	1.93
2 a	-3.35	2.99	0.00	0.00	3.29	1.60
2 b	0.30	2.25	0.00	0.00	3.62	0.28
2 c	0.27	2.29	0.00	0.00	3.18	-0.31
2 right	-7.67	4.20	0.00	0.00	1.99	0.90
3 left	-7.70	4.20	0.00	0.00	1.98	0.90
3 a	-6.66	3.95	0.00	0.00	2.21	0.89
3 b	-0.91	2.56	0.00	0.00	2.94	0.08
3 c	0.30	2.24	0.00	0.00	3.18	-0.31
3 right	-4.05	3.07	0.00	0.00	2.58	1.92
4 left	-13.26	2.02	0.00	0.00	0.02	0.37
4 a	-11.91	1.77	0.00	0.00	0.22	0.33
4 b	-7.11	0.94	0.00	0.00	0.50	0.18
4 c	-3.62	0.41	0.00	0.00	0.58	0.08
5 a	-0.45	-0.80	0.00	0.00	1.31	-1.70
5 b	0.93	1.31	0.00	0.00	0.05	-0.45
5 c	-1.52	1.10	0.00	0.00	0.60	-0.07
6 a	-2.19	0.89	0.00	0.00	0.68	-0.13
6 b	0.93	1.33	0.00	0.00	0.05	-0.42
6 c	-0.01	-0.34	0.00	0.00	1.13	-1.47
7 top	-9.51	-3.84	0.00	0.00	4.06	-0.99
7 a	-8.59	-3.34	0.00	0.00	3.61	-0.87
7 b	-5.37	-1.50	0.00	0.00	2.13	-0.45
8 top	0.03	-3.68	0.00	0.00	7.83	-1.16
8 a	0.02	-3.09	0.00	0.00	6.83	-1.02
8 b	0.02	-0.89	0.00	0.00	3.42	-0.55
9 top	9.21	-3.80	0.00	0.00	12.88	-3.69
9 a	8.32	-3.31	0.00	0.00	11.24	-3.10
9 b	5.22	-1.48	0.00	0.00	5.95	-1.45

VEH: R4 - MICHIGAN T BRUG(5.75.44) page 44
date 11/09/2009; time 13:23:25
Cline Avenue - Load Rating - Double Box Mainline - 4 Webs -

Summary of the results (Minimum)

Section	--- Deadload ----		----- P.T. ------		--- Live load ---	
	Moment	Ax.Frc	Moment	Ax.Frc	Moment	Ax.Frc
1 a	-3.85	0.44	0.00	0.00	-1.73	0.09
1 b	-7.41	0.98	0.00	0.00	-5.61	0.20
1 c	-12.28	1.82	0.00	0.00	-9.40	0.37
1 right	-13.64	2.07	0.00	0.00	-11.51	0.42
2 left	-4.14	3.16	0.00	0.00	-4.18	-0.18
2 a	-3.35	2.99	0.00	0.00	-3.68	-0.23
2 b	0.30	2.25	0.00	0.00	-0.58	0.18
2 c	0.27	2.29	0.00	0.00	-0.76	1.04
2 right	-7.67	4.20	0.00	0.00	-7.01	-0.33
3 left	-7.70	4.20	0.00	0.00	-7.01	-0.34
3 a	-6.66	3.95	0.00	0.00	-6.32	-0.35
3 b	-0.91	2.56	0.00	0.00	-1.78	0.63
3 c	0.30	2.24	0.00	0.00	-0.72	0.99
3 right	-4.05	3.07	0.00	0.00	-4.17	-0.19
4 left	-13.26	2.02	0.00	0.00	-10.86	0.41
4 a	-11.91	1.77	0.00	0.00	-9.05	0.36
4 b	-7.11	0.94	0.00	0.00	-5.39	0.19
4 c	-3.62	0.41	0.00	0.00	-1.45	0.09
5 a	-0.45	-0.80	0.00	0.00	-0.63	0.33
5 b	0.93	1.31	0.00	0.00	-0.05	0.80
5 c	-1.52	1.10	0.00	0.00	-1.04	0.29
6 a	-2.19	0.89	0.00	0.00	-1.20	0.39
6 b	0.93	1.33	0.00	0.00	-0.05	0.80
6 c	-0.01	-0.34	0.00	0.00	-0.54	0.33
7 top	-9.51	-3.84	0.00	0.00	-13.27	-3.65
7 a	-8.59	-3.34	0.00	0.00	-11.58	-3.07
7 b	-5.37	-1.50	0.00	0.00	-6.14	-1.44
8 top	0.03	-3.68	0.00	0.00	-7.81	-1.16
8 a	0.02	-3.09	0.00	0.00	-6.82	-1.02
8 b	0.02	-0.89	0.00	0.00	-3.42	-0.55
9 top	9.21	-3.80	0.00	0.00	-4.05	-0.99
9 a	8.32	-3.31	0.00	0.00	-3.61	-0.87
9 b	5.22	-1.48	0.00	0.00	-2.12	-0.45

VEH: R5 - MICHIGAN T BRUG(5.75.44) page 43
date 11/09/2009; time 13:23:25
Cline Avenue - Load Rating - Double Box Mainline - 4 Webs -

Summary of the results (Maximum)

Section	--- Deadload ----		----- P.T. ------		--- Live load ---	
	Moment	Ax.Frc	Moment	Ax.Frc	Moment	Ax.Frc
1 a	-3.85	0.44	0.00	0.00	0.24	0.12
1 b	-7.41	0.98	0.00	0.00	0.10	0.30
1 c	-12.28	1.82	0.00	0.00	-0.02	0.16
1 right	-13.64	2.07	0.00	0.00	-0.03	0.19
2 left	-4.14	3.16	0.00	0.00	1.77	2.19
2 a	-3.35	2.99	0.00	0.00	2.36	1.91
2 b	0.30	2.25	0.00	0.00	3.82	0.04
2 c	0.27	2.29	0.00	0.00	3.40	-0.38
2 right	-7.67	4.20	0.00	0.00	1.40	1.17
3 left	-7.70	4.20	0.00	0.00	1.40	1.27
3 a	-6.66	3.95	0.00	0.00	1.64	1.11
3 b	-0.91	2.56	0.00	0.00	3.08	0.11
3 c	0.30	2.24	0.00	0.00	3.40	-0.39
3 right	-4.05	3.07	0.00	0.00	1.77	2.18
4 left	-13.26	2.02	0.00	0.00	-0.03	0.18
4 a	-11.91	1.77	0.00	0.00	-0.02	0.16
4 b	-7.11	0.94	0.00	0.00	0.10	0.29
4 c	-3.62	0.41	0.00	0.00	0.23	0.12
5 a	-0.45	-0.80	0.00	0.00	1.42	-1.94
5 b	0.93	1.31	0.00	0.00	0.06	-0.40
5 c	-1.52	1.10	0.00	0.00	0.63	-0.09
6 a	-2.19	0.89	0.00	0.00	0.73	-0.17
6 b	0.93	1.33	0.00	0.00	0.05	-0.36
6 c	-0.01	-0.34	0.00	0.00	1.21	-1.62
7 top	-9.51	-3.84	0.00	0.00	5.08	-1.41
7 a	-8.59	-3.34	0.00	0.00	4.49	-1.25
7 b	-5.37	-1.50	0.00	0.00	2.55	-0.68
8 top	0.03	-3.68	0.00	0.00	8.95	-1.62
8 a	0.02	-3.09	0.00	0.00	7.79	-1.46
8 b	0.02	-0.89	0.00	0.00	3.85	-0.83
9 top	9.21	-3.80	0.00	0.00	14.76	-3.61
9 a	8.32	-3.31	0.00	0.00	12.93	-3.25
9 b	5.22	-1.48	0.00	0.00	6.78	-1.90

VEH: R5 - MICHIGAN T BRUG(5.75.44) page 44
date 11/09/2009; time 13:23:25
Cline Avenue - Load Rating - Double Box Mainline - 4 Webs -

Summary of the results (Minimum)

Section	--- Deadload ----		----- P.T. ------		--- Live load ---	
	Moment	Ax.Frc	Moment	Ax.Frc	Moment	Ax.Frc
1 a	-3.85	0.44	0.00	0.00	-2.70	0.12
1 b	-7.41	0.98	0.00	0.00	-7.08	0.28
1 c	-12.28	1.82	0.00	0.00	-12.42	0.56
1 right	-13.64	2.07	0.00	0.00	-14.42	0.65
2 left	-4.14	3.16	0.00	0.00	-5.75	-0.19
2 a	-3.35	2.99	0.00	0.00	-5.09	-0.23
2 b	0.30	2.25	0.00	0.00	-0.61	0.17
2 c	0.27	2.29	0.00	0.00	-0.87	1.15
2 right	-7.67	4.20	0.00	0.00	-8.75	-0.34
3 left	-7.70	4.20	0.00	0.00	-8.76	-0.34
3 a	-6.66	3.95	0.00	0.00	-7.89	-0.37
3 b	-0.91	2.56	0.00	0.00	-1.79	0.33
3 c	0.30	2.24	0.00	0.00	-0.83	1.10
3 right	-4.05	3.07	0.00	0.00	-5.74	-0.20
4 left	-13.26	2.02	0.00	0.00	-13.77	0.64
4 a	-11.91	1.77	0.00	0.00	-11.96	0.55
4 b	-7.11	0.94	0.00	0.00	-6.78	0.27
4 c	-3.62	0.41	0.00	0.00	-2.37	0.11
5 a	-0.45	-0.80	0.00	0.00	-0.65	0.33
5 b	0.93	1.31	0.00	0.00	-0.05	0.97
5 c	-1.52	1.10	0.00	0.00	-1.09	0.38
6 a	-2.19	0.89	0.00	0.00	-1.25	0.49
6 b	0.93	1.33	0.00	0.00	-0.05	0.96
6 c	-0.01	-0.34	0.00	0.00	-0.56	0.34
7 top	-9.51	-3.84	0.00	0.00	-15.20	-3.63
7 a	-8.59	-3.34	0.00	0.00	-13.32	-3.27
7 b	-5.37	-1.50	0.00	0.00	-6.99	-1.91
8 top	0.03	-3.68	0.00	0.00	-8.94	-1.62
8 a	0.02	-3.09	0.00	0.00	-7.78	-1.46
8 b	0.02	-0.89	0.00	0.00	-3.85	-0.83
9 top	9.21	-3.80	0.00	0.00	-5.07	-1.40
9 a	8.32	-3.31	0.00	0.00	-4.48	-1.25
9 b	5.22	-1.48	0.00	0.00	-2.54	-0.68

1II_B_S1_EL.OUT 9/11/2009

VEH: S1 - SPECIAL TR BRUG(5.75.44) page 43
date 11/09/2009; time 13:23:26
Cline Avenue - Load Rating - Double Box Mainline - 4 Webs -

Summary of the results (Maximum)

Section	--- Deadload ----		----- P.T. ------		--- Live load ---	
	Moment	Ax.Frc	Moment	Ax.Frc	Moment	Ax.Frc
1 a	-3.85	0.44	0.00	0.00	0.92	0.06
1 b	-7.41	0.98	0.00	0.00	0.59	0.21
1 c	-12.28	1.82	0.00	0.00	-0.04	0.22
1 right	-13.64	2.07	0.00	0.00	-0.05	0.25
2 left	-4.14	3.16	0.00	0.00	2.00	2.39
2 a	-3.35	2.99	0.00	0.00	3.15	2.02
2 b	0.30	2.25	0.00	0.00	4.62	0.33
2 c	0.27	2.29	0.00	0.00	4.11	-0.50
2 right	-7.67	4.20	0.00	0.00	1.51	1.09
3 left	-7.70	4.20	0.00	0.00	1.50	1.08
3 a	-6.66	3.95	0.00	0.00	2.11	0.92
3 b	-0.91	2.56	0.00	0.00	3.89	-0.18
3 c	0.30	2.24	0.00	0.00	4.11	-0.50
3 right	-4.05	3.07	0.00	0.00	2.00	2.39
4 left	-13.26	2.02	0.00	0.00	-0.05	0.25
4 a	-11.91	1.77	0.00	0.00	-0.04	0.22
4 b	-7.11	0.94	0.00	0.00	0.59	0.20
4 c	-3.62	0.41	0.00	0.00	0.91	0.05
5 a	-0.45	-0.80	0.00	0.00	1.62	-2.02
5 b	0.93	1.31	0.00	0.00	0.05	-0.61
5 c	-1.52	1.10	0.00	0.00	0.71	-0.15
6 a	-2.19	0.89	0.00	0.00	0.83	-0.25
6 b	0.93	1.33	0.00	0.00	0.05	-0.57
6 c	-0.01	-0.34	0.00	0.00	1.37	-1.70
7 top	-9.51	-3.84	0.00	0.00	5.01	-1.89
7 a	-8.59	-3.34	0.00	0.00	4.34	-1.67
7 b	-5.37	-1.50	0.00	0.00	2.36	-0.87
8 top	0.03	-3.68	0.00	0.00	9.60	-2.05
8 a	0.02	-3.09	0.00	0.00	8.25	-1.82
8 b	0.02	-0.89	0.00	0.00	3.95	-1.00
9 top	9.21	-3.80	0.00	0.00	15.66	-5.52
9 a	8.32	-3.31	0.00	0.00	13.51	-4.87
9 b	5.22	-1.48	0.00	0.00	6.82	-2.60

1II_B_S1_EL.OUT 9/11/2009

VEH: S1 - SPECIAL TR BRUG(5.75.44) page 44
date 11/09/2009; time 13:23:26
Cline Avenue - Load Rating - Double Box Mainline - 4 Webs -

Summary of the results (Minimum)

Section	--- Deadload ----		----- P.T. ------		--- Live load ---	
	Moment	Ax.Frc	Moment	Ax.Frc	Moment	Ax.Frc
1 a	-3.85	0.44	0.00	0.00	-2.05	0.04
1 b	-7.41	0.98	0.00	0.00	-7.15	0.14
1 c	-12.28	1.82	0.00	0.00	-12.32	0.47
1 right	-13.64	2.07	0.00	0.00	-14.93	0.62
2 left	-4.14	3.16	0.00	0.00	-6.29	-0.19
2 a	-3.35	2.99	0.00	0.00	-5.61	-0.24
2 b	0.30	2.25	0.00	0.00	-1.13	-0.34
2 c	0.27	2.29	0.00	0.00	-0.79	1.19
2 right	-7.67	4.20	0.00	0.00	-9.34	-0.39
3 left	-7.70	4.20	0.00	0.00	-9.35	-0.39
3 a	-6.66	3.95	0.00	0.00	-8.48	-0.42
3 b	-0.91	2.56	0.00	0.00	-2.22	-0.09
3 c	0.30	2.24	0.00	0.00	-0.75	1.14
3 right	-4.05	3.07	0.00	0.00	-6.28	-0.19
4 left	-13.26	2.02	0.00	0.00	-14.23	0.63
4 a	-11.91	1.77	0.00	0.00	-11.94	0.47
4 b	-7.11	0.94	0.00	0.00	-6.94	0.14
4 c	-3.62	0.41	0.00	0.00	-1.73	0.04
5 a	-0.45	-0.80	0.00	0.00	-0.74	0.40
5 b	0.93	1.31	0.00	0.00	-0.05	0.99
5 c	-1.52	1.10	0.00	0.00	-1.26	0.11
6 a	-2.19	0.89	0.00	0.00	-1.44	0.23
6 b	0.93	1.33	0.00	0.00	-0.05	0.99
6 c	-0.01	-0.34	0.00	0.00	-0.64	0.40
7 top	-9.51	-3.84	0.00	0.00	-16.10	-5.49
7 a	-8.59	-3.34	0.00	0.00	-13.89	-4.84
7 b	-5.37	-1.50	0.00	0.00	-7.02	-2.59
8 top	0.03	-3.68	0.00	0.00	-9.58	-2.05
8 a	0.02	-3.09	0.00	0.00	-8.24	-1.82
8 b	0.02	-0.89	0.00	0.00	-3.95	-1.00
9 top	9.21	-3.80	0.00	0.00	-5.01	-1.89
9 a	8.32	-3.31	0.00	0.00	-4.33	-1.67
9 b	5.22	-1.48	0.00	0.00	-2.35	-0.87

1II_B_S2_EL.OUT 9/11/2009

VEH: S2 - SPECIAL TR BRUG(5.75.44) page 43
date 11/09/2009; time 13:23:26
Cline Avenue - Load Rating - Double Box Mainline - 4 Webs -

Summary of the results (Maximum)

Section	--- Deadload ----		----- P.T. ------		--- Live load ---	
	Moment	Ax.Frc	Moment	Ax.Frc	Moment	Ax.Frc
1 a	-3.85	0.44	0.00	0.00	0.74	0.07
1 b	-7.41	0.98	0.00	0.00	0.46	0.22
1 c	-12.28	1.82	0.00	0.00	-0.04	0.22
1 right	-13.64	2.07	0.00	0.00	-0.05	0.25
2 left	-4.14	3.16	0.00	0.00	2.29	2.32
2 a	-3.35	2.99	0.00	0.00	3.24	1.96
2 b	0.30	2.25	0.00	0.00	4.39	0.34
2 c	0.27	2.29	0.00	0.00	3.87	-0.50
2 right	-7.67	4.20	0.00	0.00	1.74	1.00
3 left	-7.70	4.20	0.00	0.00	1.73	1.00
3 a	-6.66	3.95	0.00	0.00	2.18	0.85
3 b	-0.91	2.56	0.00	0.00	3.67	-0.18
3 c	0.30	2.24	0.00	0.00	3.87	-0.51
3 right	-4.05	3.07	0.00	0.00	2.29	2.31
4 left	-13.26	2.02	0.00	0.00	-0.05	0.25
4 a	-11.91	1.77	0.00	0.00	-0.04	0.22
4 b	-7.11	0.94	0.00	0.00	0.45	0.22
4 c	-3.62	0.41	0.00	0.00	0.73	0.07
5 a	-0.45	-0.80	0.00	0.00	1.60	-2.01
5 b	0.93	1.31	0.00	0.00	0.05	-0.61
5 c	-1.52	1.10	0.00	0.00	0.70	-0.15
6 a	-2.19	0.89	0.00	0.00	0.82	-0.25
6 b	0.93	1.33	0.00	0.00	0.05	-0.57
6 c	-0.01	-0.34	0.00	0.00	1.35	-1.70
7 top	-9.51	-3.84	0.00	0.00	4.93	-1.66
7 a	-8.59	-3.34	0.00	0.00	4.30	-1.47
7 b	-5.37	-1.50	0.00	0.00	2.36	-0.78
8 top	0.03	-3.68	0.00	0.00	9.44	-1.82
8 a	0.02	-3.09	0.00	0.00	8.15	-1.62
8 b	0.02	-0.89	0.00	0.00	3.94	-0.90
9 top	9.21	-3.80	0.00	0.00	15.39	-4.81
9 a	8.32	-3.31	0.00	0.00	13.33	-4.22
9 b	5.22	-1.48	0.00	0.00	6.79	-2.24

1II_B_S2_EL.OUT 9/11/2009

VEH: S2 - SPECIAL TR BRUG(5.75.44) page 44
date 11/09/2009; time 13:23:26
Cline Avenue - Load Rating - Double Box Mainline - 4 Webs -

Summary of the results (Minimum)

Section	--- Deadload ----		----- P.T. ------		--- Live load ---	
	Moment	Ax.Frc	Moment	Ax.Frc	Moment	Ax.Frc
1 a	-3.85	0.44	0.00	0.00	-2.15	0.06
1 b	-7.41	0.98	0.00	0.00	-6.97	0.17
1 c	-12.28	1.82	0.00	0.00	-11.99	0.46
1 right	-13.64	2.07	0.00	0.00	-14.40	0.59
2 left	-4.14	3.16	0.00	0.00	-6.02	-0.20
2 a	-3.35	2.99	0.00	0.00	-5.37	-0.25
2 b	0.30	2.25	0.00	0.00	-1.09	-0.03
2 c	0.27	2.29	0.00	0.00	-0.78	1.18
2 right	-7.67	4.20	0.00	0.00	-9.05	-0.39
3 left	-7.70	4.20	0.00	0.00	-9.06	-0.39
3 a	-6.66	3.95	0.00	0.00	-8.21	-0.42
3 b	-0.91	2.56	0.00	0.00	-2.10	0.43
3 c	0.30	2.24	0.00	0.00	-0.74	1.14
3 right	-4.05	3.07	0.00	0.00	-6.01	-0.20
4 left	-13.26	2.02	0.00	0.00	-13.71	0.59
4 a	-11.91	1.77	0.00	0.00	-11.60	0.46
4 b	-7.11	0.94	0.00	0.00	-6.74	0.16
4 c	-3.62	0.41	0.00	0.00	-1.83	0.06
5 a	-0.45	-0.80	0.00	0.00	-0.73	0.40
5 b	0.93	1.31	0.00	0.00	-0.05	1.01
5 c	-1.52	1.10	0.00	0.00	-1.24	0.11
6 a	-2.19	0.89	0.00	0.00	-1.42	0.21
6 b	0.93	1.33	0.00	0.00	-0.05	1.01
6 c	-0.01	-0.34	0.00	0.00	-0.63	0.40
7 top	-9.51	-3.84	0.00	0.00	-15.82	-4.79
7 a	-8.59	-3.34	0.00	0.00	-13.70	-4.20
7 b	-5.37	-1.50	0.00	0.00	-6.99	-2.24
8 top	0.03	-3.68	0.00	0.00	-9.43	-1.82
8 a	0.02	-3.09	0.00	0.00	-8.14	-1.62
8 b	0.02	-0.89	0.00	0.00	-3.93	-0.90
9 top	9.21	-3.80	0.00	0.00	-4.92	-1.66
9 a	8.32	-3.31	0.00	0.00	-4.29	-1.47
9 b	5.22	-1.48	0.00	0.00	-2.36	-0.78

VEH: S3 - SPECIAL TR BRUG(5.75.44) page 43
date 11/09/2009; time 13:23:27
Cline Avenue - Load Rating - Double Box Mainline - 4 Webs -

Summary of the results (Maximum)

Section	--- Deadload ----		----- P.T. ------		--- Live load ---	
	Moment	Ax.Frc	Moment	Ax.Frc	Moment	Ax.Frc
1 a	-3.85	0.44	0.00	0.00	0.66	0.12
1 b	-7.41	0.98	0.00	0.00	0.40	0.32
1 c	-12.28	1.82	0.00	0.00	-0.05	0.29
1 right	-13.64	2.07	0.00	0.00	-0.07	0.33
2 left	-4.14	3.16	0.00	0.00	3.47	3.03
2 a	-3.35	2.99	0.00	0.00	4.43	2.59
2 b	0.30	2.25	0.00	0.00	5.57	0.46
2 c	0.27	2.29	0.00	0.00	4.83	-0.64
2 right	-7.67	4.20	0.00	0.00	2.60	1.31
3 left	-7.70	4.20	0.00	0.00	2.59	1.31
3 a	-6.66	3.95	0.00	0.00	2.99	1.17
3 b	-0.91	2.56	0.00	0.00	4.57	-0.15
3 c	0.30	2.24	0.00	0.00	4.83	-0.64
3 right	-4.05	3.07	0.00	0.00	3.48	3.02
4 left	-13.26	2.02	0.00	0.00	-0.07	0.32
4 a	-11.91	1.77	0.00	0.00	-0.05	0.28
4 b	-7.11	0.94	0.00	0.00	0.39	0.31
4 c	-3.62	0.41	0.00	0.00	0.65	0.12
5 a	-0.45	-0.80	0.00	0.00	2.14	-2.71
5 b	0.93	1.31	0.00	0.00	0.07	-0.78
5 c	-1.52	1.10	0.00	0.00	0.94	-0.18
6 a	-2.19	0.89	0.00	0.00	1.10	-0.31
6 b	0.93	1.33	0.00	0.00	0.07	-0.73
6 c	-0.01	-0.34	0.00	0.00	1.81	-2.31
7 top	-9.51	-3.84	0.00	0.00	6.60	-1.95
7 a	-8.59	-3.34	0.00	0.00	5.80	-1.72
7 b	-5.37	-1.50	0.00	0.00	3.26	-0.92
8 top	0.03	-3.68	0.00	0.00	12.64	-2.18
8 a	0.02	-3.09	0.00	0.00	10.97	-1.95
8 b	0.02	-0.89	0.00	0.00	5.37	-1.09
9 top	9.21	-3.80	0.00	0.00	20.58	-5.45
9 a	8.32	-3.31	0.00	0.00	17.94	-4.80
9 b	5.22	-1.48	0.00	0.00	9.27	-2.62

VEH: S3 - SPECIAL TR BRUG(5.75.44) page 44
date 11/09/2009; time 13:23:27
Cline Avenue - Load Rating - Double Box Mainline - 4 Webs -

Summary of the results (Minimum)

Section	--- Deadload ----		----- P.T. ------		--- Live load ---	
	Moment	Ax.Frc	Moment	Ax.Frc	Moment	Ax.Frc
1 a	-3.85	0.44	0.00	0.00	-3.15	0.11
1 b	-7.41	0.98	0.00	0.00	-9.22	0.27
1 c	-12.28	1.82	0.00	0.00	-15.95	0.62
1 right	-13.64	2.07	0.00	0.00	-18.88	0.76
2 left	-4.14	3.16	0.00	0.00	-7.65	-0.28
2 a	-3.35	2.99	0.00	0.00	-6.80	-0.34
2 b	0.30	2.25	0.00	0.00	-1.47	-0.01
2 c	0.27	2.29	0.00	0.00	-1.10	1.61
2 right	-7.67	4.20	0.00	0.00	-11.86	-0.53
3 left	-7.70	4.20	0.00	0.00	-11.87	-0.54
3 a	-6.66	3.95	0.00	0.00	-10.73	-0.57
3 b	-0.91	2.56	0.00	0.00	-2.80	0.88
3 c	0.30	2.24	0.00	0.00	-1.04	1.55
3 right	-4.05	3.07	0.00	0.00	-7.64	-0.29
4 left	-13.26	2.02	0.00	0.00	-17.98	0.76
4 a	-11.91	1.77	0.00	0.00	-15.38	0.62
4 b	-7.11	0.94	0.00	0.00	-8.86	0.26
4 c	-3.62	0.41	0.00	0.00	-2.72	0.10
5 a	-0.45	-0.80	0.00	0.00	-0.99	0.53
5 b	0.93	1.31	0.00	0.00	-0.07	1.36
5 c	-1.52	1.10	0.00	0.00	-1.66	0.23
6 a	-2.19	0.89	0.00	0.00	-1.91	0.38
6 b	0.93	1.33	0.00	0.00	-0.07	1.36
6 c	-0.01	-0.34	0.00	0.00	-0.85	0.53
7 top	-9.51	-3.84	0.00	0.00	-21.16	-5.44
7 a	-8.59	-3.34	0.00	0.00	-18.45	-4.80
7 b	-5.37	-1.50	0.00	0.00	-9.55	-2.62
8 top	0.03	-3.68	0.00	0.00	-12.63	-2.18
8 a	0.02	-3.09	0.00	0.00	-10.96	-1.95
8 b	0.02	-0.89	0.00	0.00	-5.36	-1.09
9 top	9.21	-3.80	0.00	0.00	-6.59	-1.94
9 a	8.32	-3.31	0.00	0.00	-5.80	-1.72
9 b	5.22	-1.48	0.00	0.00	-3.26	-0.92

1II_B_S4_EL.OUT 9/11/2009

VEH: S4 - SUPER LOAD BRUG(5.75.44) page 43
date 11/09/2009; time 13:23:28
Cline Avenue - Load Rating - Double Box Mainline - 4 Webs -

Summary of the results (Maximum)

Section	--- Deadload ----		----- P.T. ------		--- Live load ---	
	Moment	Ax.Frc	Moment	Ax.Frc	Moment	Ax.Frc
1 a	-3.85	0.44	0.00	0.00	0.52	0.05
1 b	-7.41	0.98	0.00	0.00	0.37	0.15
1 c	-12.28	1.82	0.00	0.00	-0.04	0.24
1 right	-13.64	2.07	0.00	0.00	-0.05	0.27
2 left	-4.14	3.16	0.00	0.00	3.35	2.08
2 a	-3.35	2.99	0.00	0.00	3.96	1.78
2 b	0.30	2.25	0.00	0.00	4.02	0.35
2 c	0.27	2.29	0.00	0.00	3.27	-0.47
2 right	-7.67	4.20	0.00	0.00	2.36	0.76
3 left	-7.70	4.20	0.00	0.00	2.36	0.76
3 a	-6.66	3.95	0.00	0.00	2.64	0.66
3 b	-0.91	2.56	0.00	0.00	3.26	-0.21
3 c	0.30	2.24	0.00	0.00	3.27	-0.47
3 right	-4.05	3.07	0.00	0.00	3.35	2.08
4 left	-13.26	2.02	0.00	0.00	-0.05	0.26
4 a	-11.91	1.77	0.00	0.00	-0.04	0.23
4 b	-7.11	0.94	0.00	0.00	0.37	0.14
4 c	-3.62	0.41	0.00	0.00	0.51	0.05
5 a	-0.45	-0.80	0.00	0.00	1.61	-1.94
5 b	0.93	1.31	0.00	0.00	0.05	-0.69
5 c	-1.52	1.10	0.00	0.00	0.72	-0.13
6 a	-2.19	0.89	0.00	0.00	0.83	-0.22
6 b	0.93	1.33	0.00	0.00	0.05	-0.65
6 c	-0.01	-0.34	0.00	0.00	1.39	-1.69
7 top	-9.51	-3.84	0.00	0.00	4.31	-0.84
7 a	-8.59	-3.34	0.00	0.00	3.79	-0.74
7 b	-5.37	-1.50	0.00	0.00	2.18	-0.62
8 top	0.03	-3.68	0.00	0.00	9.10	-1.45
8 a	0.02	-3.09	0.00	0.00	7.89	-1.29
8 b	0.02	-0.89	0.00	0.00	3.85	-0.70
9 top	9.21	-3.80	0.00	0.00	14.64	-3.73
9 a	8.32	-3.31	0.00	0.00	12.75	-3.29
9 b	5.22	-1.48	0.00	0.00	6.58	-1.77

1II_B_S4_EL.OUT 9/11/2009

VEH: S4 - SUPER LOAD BRUG(5.75.44) page 44
date 11/09/2009; time 13:23:28
Cline Avenue - Load Rating - Double Box Mainline - 4 Webs -

Summary of the results (Minimum)

Section	--- Deadload ----		----- P.T. ------		--- Live load ---	
	Moment	Ax.Frc	Moment	Ax.Frc	Moment	Ax.Frc
1 a	-3.85	0.44	0.00	0.00	-1.96	0.04
1 b	-7.41	0.98	0.00	0.00	-5.97	0.12
1 c	-12.28	1.82	0.00	0.00	-10.31	0.33
1 right	-13.64	2.07	0.00	0.00	-12.33	0.43
2 left	-4.14	3.16	0.00	0.00	-4.92	-0.21
2 a	-3.35	2.99	0.00	0.00	-4.38	-0.31
2 b	0.30	2.25	0.00	0.00	-1.18	-0.07
2 c	0.27	2.29	0.00	0.00	-0.75	1.18
2 right	-7.67	4.20	0.00	0.00	-8.04	-0.41
3 left	-7.70	4.20	0.00	0.00	-8.05	-0.42
3 a	-6.66	3.95	0.00	0.00	-7.28	-0.43
3 b	-0.91	2.56	0.00	0.00	-2.26	0.85
3 c	0.30	2.24	0.00	0.00	-0.71	1.14
3 right	-4.05	3.07	0.00	0.00	-4.91	-0.22
4 left	-13.26	2.02	0.00	0.00	-11.73	0.43
4 a	-11.91	1.77	0.00	0.00	-9.94	0.33
4 b	-7.11	0.94	0.00	0.00	-5.75	0.12
4 c	-3.62	0.41	0.00	0.00	-1.68	0.04
5 a	-0.45	-0.80	0.00	0.00	-0.76	0.42
5 b	0.93	1.31	0.00	0.00	-0.05	0.94
5 c	-1.52	1.10	0.00	0.00	-1.29	0.05
6 a	-2.19	0.89	0.00	0.00	-1.48	0.16
6 b	0.93	1.33	0.00	0.00	-0.05	0.94
6 c	-0.01	-0.34	0.00	0.00	-0.66	0.42
7 top	-9.51	-3.84	0.00	0.00	-15.03	-3.72
7 a	-8.59	-3.34	0.00	0.00	-13.09	-3.28
7 b	-5.37	-1.50	0.00	0.00	-6.77	-1.77
8 top	0.03	-3.68	0.00	0.00	-9.08	-1.45
8 a	0.02	-3.09	0.00	0.00	-7.88	-1.29
8 b	0.02	-0.89	0.00	0.00	-3.85	-0.70
9 top	9.21	-3.80	0.00	0.00	-4.30	-0.83
9 a	8.32	-3.31	0.00	0.00	-3.78	-0.74
9 b	5.22	-1.48	0.00	0.00	-2.17	-0.62

1II_B_S5_EL.OUT 9/11/2009

VEH: S5 - SUPERLOAD BRUG(5.75.44) page 43
date 11/09/2009; time 13:23:28
Cline Avenue - Load Rating - Double Box Mainline - 4 Webs -

Summary of the results (Maximum)

Section	--- Deadload ----		----- P.T. ------		--- Live load ---	
	Moment	Ax.Frc	Moment	Ax.Frc	Moment	Ax.Frc
1 a	-3.85	0.44	0.00	0.00	0.81	0.07
1 b	-7.41	0.98	0.00	0.00	0.50	0.24
1 c	-12.28	1.82	0.00	0.00	-0.06	0.31
1 right	-13.64	2.07	0.00	0.00	-0.08	0.35
2 left	-4.14	3.16	0.00	0.00	3.70	2.82
2 a	-3.35	2.99	0.00	0.00	4.69	2.40
2 b	0.30	2.25	0.00	0.00	5.41	0.46
2 c	0.27	2.29	0.00	0.00	4.57	-0.67
2 right	-7.67	4.20	0.00	0.00	2.68	1.07
3 left	-7.70	4.20	0.00	0.00	2.67	1.07
3 a	-6.66	3.95	0.00	0.00	3.14	0.86
3 b	-0.91	2.56	0.00	0.00	4.47	-0.35
3 c	0.30	2.24	0.00	0.00	4.57	-0.67
3 right	-4.05	3.07	0.00	0.00	3.71	2.82
4 left	-13.26	2.02	0.00	0.00	-0.08	0.34
4 a	-11.91	1.77	0.00	0.00	-0.06	0.30
4 b	-7.11	0.94	0.00	0.00	0.50	0.23
4 c	-3.62	0.41	0.00	0.00	0.80	0.07
5 a	-0.45	-0.80	0.00	0.00	2.10	-2.54
5 b	0.93	1.31	0.00	0.00	0.06	-0.88
5 c	-1.52	1.10	0.00	0.00	0.92	-0.21
6 a	-2.19	0.89	0.00	0.00	1.07	-0.33
6 b	0.93	1.33	0.00	0.00	0.06	-0.83
6 c	-0.01	-0.34	0.00	0.00	1.78	-2.18
7 top	-9.51	-3.84	0.00	0.00	5.96	-1.53
7 a	-8.59	-3.34	0.00	0.00	5.22	-1.35
7 b	-5.37	-1.50	0.00	0.00	2.86	-0.91
8 top	0.03	-3.68	0.00	0.00	11.94	-2.11
8 a	0.02	-3.09	0.00	0.00	10.32	-1.88
8 b	0.02	-0.89	0.00	0.00	4.99	-1.05
9 top	9.21	-3.80	0.00	0.00	19.29	-5.43
9 a	8.32	-3.31	0.00	0.00	16.74	-4.78
9 b	5.22	-1.48	0.00	0.00	8.54	-2.57

1II_B_S5_EL.OUT 9/11/2009

VEH: S5 - SUPERLOAD BRUG(5.75.44) page 44
date 11/09/2009; time 13:23:28
Cline Avenue - Load Rating - Double Box Mainline - 4 Webs -

Summary of the results (Minimum)

Section	--- Deadload ----		----- P.T. ------		--- Live load ---	
	Moment	Ax.Frc	Moment	Ax.Frc	Moment	Ax.Frc
1 a	-3.85	0.44	0.00	0.00	-2.61	0.06
1 b	-7.41	0.98	0.00	0.00	-8.27	0.17
1 c	-12.28	1.82	0.00	0.00	-14.24	0.48
1 right	-13.64	2.07	0.00	0.00	-17.05	0.63
2 left	-4.14	3.16	0.00	0.00	-7.13	-0.27
2 a	-3.35	2.99	0.00	0.00	-6.35	-0.33
2 b	0.30	2.25	0.00	0.00	-1.47	-0.08
2 c	0.27	2.29	0.00	0.00	-0.95	1.52
2 right	-7.67	4.20	0.00	0.00	-11.01	-0.53
3 left	-7.70	4.20	0.00	0.00	-11.02	-0.53
3 a	-6.66	3.95	0.00	0.00	-9.99	-0.56
3 b	-0.91	2.56	0.00	0.00	-2.83	1.10
3 c	0.30	2.24	0.00	0.00	-0.90	1.47
3 right	-4.05	3.07	0.00	0.00	-7.12	-0.27
4 left	-13.26	2.02	0.00	0.00	-16.24	0.63
4 a	-11.91	1.77	0.00	0.00	-13.77	0.49
4 b	-7.11	0.94	0.00	0.00	-7.98	0.17
4 c	-3.62	0.41	0.00	0.00	-2.23	0.05
5 a	-0.45	-0.80	0.00	0.00	-0.97	0.53
5 b	0.93	1.31	0.00	0.00	-0.06	1.27
5 c	-1.52	1.10	0.00	0.00	-1.65	0.01
6 a	-2.19	0.89	0.00	0.00	-1.88	0.15
6 b	0.93	1.33	0.00	0.00	-0.06	1.27
6 c	-0.01	-0.34	0.00	0.00	-0.84	0.53
7 top	-9.51	-3.84	0.00	0.00	-19.81	-5.41
7 a	-8.59	-3.34	0.00	0.00	-17.19	-4.77
7 b	-5.37	-1.50	0.00	0.00	-8.78	-2.57
8 top	0.03	-3.68	0.00	0.00	-11.92	-2.11
8 a	0.02	-3.09	0.00	0.00	-10.31	-1.88
8 b	0.02	-0.89	0.00	0.00	-4.99	-1.05
9 top	9.21	-3.80	0.00	0.00	-5.95	-1.53
9 a	8.32	-3.31	0.00	0.00	-5.21	-1.35
9 b	5.22	-1.48	0.00	0.00	-2.86	-0.91

VEH: HL93- TRUCK BRUG(5.75.44) page 43
date 11/09/2009; time 13:23:29
Cline Avenue - Load Rating - Double Box Mainline - 4 Webs -

Summary of the results (Maximum)

Section	--- Deadload ---- Moment	Ax.Frc	----- P.T. ------ Moment	Ax.Frc	--- Live load --- Moment	Ax.Frc
1 a	-3.85	0.44	0.00	0.00	1.38	0.09
1 b	-7.41	0.98	0.00	0.00	1.02	0.26
1 c	-12.28	1.82	0.00	0.00	0.06	0.18
1 right	-13.64	2.07	0.00	0.00	0.07	0.20
2 left	-4.14	3.16	0.00	0.00	-0.73	2.35
2 a	-3.35	2.99	0.00	0.00	0.99	1.61
2 b	0.30	2.25	0.00	0.00	4.01	0.20
2 c	0.27	2.29	0.00	0.00	4.82	-0.30
2 right	-7.67	4.20	0.00	0.00	0.65	0.56
3 left	-7.70	4.20	0.00	0.00	0.65	0.57
3 a	-6.66	3.95	0.00	0.00	1.31	1.56
3 b	-0.91	2.56	0.00	0.00	3.54	0.37
3 c	0.30	2.24	0.00	0.00	4.82	-0.31
3 right	-4.05	3.07	0.00	0.00	-0.73	2.03
4 left	-13.26	2.02	0.00	0.00	0.07	0.20
4 a	-11.91	1.77	0.00	0.00	0.06	0.17
4 b	-7.11	0.94	0.00	0.00	1.02	0.25
4 c	-3.62	0.41	0.00	0.00	1.37	0.09
5 a	-0.45	-0.80	0.00	0.00	1.21	-0.94
5 b	0.93	1.31	0.00	0.00	0.06	-0.03
5 c	-1.52	1.10	0.00	0.00	0.69	-0.20
6 a	-2.19	0.89	0.00	0.00	0.82	-0.34
6 b	0.93	1.33	0.00	0.00	0.04	-0.15
6 c	-0.01	-0.34	0.00	0.00	1.01	-0.54
7 top	-9.51	-3.84	0.00	0.00	5.65	-4.49
7 a	-8.59	-3.34	0.00	0.00	4.75	-3.83
7 b	-5.37	-1.50	0.00	0.00	2.49	-1.75
8 top	0.03	-3.68	0.00	0.00	10.15	-4.74
8 a	0.02	-3.09	0.00	0.00	8.58	-4.07
8 b	0.02	-0.89	0.00	0.00	4.01	-1.95
9 top	9.21	-3.80	0.00	0.00	10.97	-6.54
9 a	8.32	-3.31	0.00	0.00	9.29	-5.57
9 b	5.22	-1.48	0.00	0.00	4.64	-2.59

VEH: HL93- TRUCK BRUG(5.75.44) page 44
date 11/09/2009; time 13:23:29
Cline Avenue - Load Rating - Double Box Mainline - 4 Webs -

Summary of the results (Minimum)

Section	--- Deadload ---- Moment	Ax.Frc	----- P.T. ------ Moment	Ax.Frc	--- Live load --- Moment	Ax.Frc
1 a	-3.85	0.44	0.00	0.00	-1.27	0.15
1 b	-7.41	0.98	0.00	0.00	-6.39	0.39
1 c	-12.28	1.82	0.00	0.00	-11.28	1.09
1 right	-13.64	2.07	0.00	0.00	-14.66	1.46
2 left	-4.14	3.16	0.00	0.00	-7.95	1.69
2 a	-3.35	2.99	0.00	0.00	-6.50	-0.18
2 b	0.30	2.25	0.00	0.00	-1.40	-0.12
2 c	0.27	2.29	0.00	0.00	-0.98	0.89
2 right	-7.67	4.20	0.00	0.00	-10.76	-0.05
3 left	-7.70	4.20	0.00	0.00	-10.77	-0.06
3 a	-6.66	3.95	0.00	0.00	-9.37	-0.14
3 b	-0.91	2.56	0.00	0.00	-1.71	0.13
3 c	0.30	2.24	0.00	0.00	-0.59	0.73
3 right	-4.05	3.07	0.00	0.00	-7.94	1.68
4 left	-13.26	2.02	0.00	0.00	-13.93	1.61
4 a	-11.91	1.77	0.00	0.00	-10.99	1.19
4 b	-7.11	0.94	0.00	0.00	-6.26	0.40
4 c	-3.62	0.41	0.00	0.00	-0.98	0.15
5 a	-0.45	-0.80	0.00	0.00	-0.72	0.39
5 b	0.93	1.31	0.00	0.00	-0.05	1.18
5 c	-1.52	1.10	0.00	0.00	-1.01	1.13
6 a	-2.19	0.89	0.00	0.00	-1.16	1.17
6 b	0.93	1.33	0.00	0.00	-0.05	1.18
6 c	-0.01	-0.34	0.00	0.00	-0.62	0.40
7 top	-9.51	-3.84	0.00	0.00	-11.35	-6.46
7 a	-8.59	-3.34	0.00	0.00	-9.61	-5.51
7 b	-5.37	-1.50	0.00	0.00	-4.79	-2.57
8 top	0.03	-3.68	0.00	0.00	-10.14	-4.74
8 a	0.02	-3.09	0.00	0.00	-8.57	-4.07
8 b	0.02	-0.89	0.00	0.00	-4.00	-1.95
9 top	9.21	-3.80	0.00	0.00	-5.65	-4.49
9 a	8.32	-3.31	0.00	0.00	-4.75	-3.83
9 b	5.22	-1.48	0.00	0.00	-2.49	-1.75

VEH: HL93- TANDEM BRUG(5.75.44) page 43
date 11/09/2009; time 13:23:29
Cline Avenue - Load Rating - Double Box Mainline - 4 Webs -

Summary of the results (Maximum)

Section	--- Deadload ----		----- P.T. ------		--- Live load ---	
	Moment	Ax.Frc	Moment	Ax.Frc	Moment	Ax.Frc
1 a	-3.85	0.44	0.00	0.00	1.14	0.10
1 b	-7.41	0.98	0.00	0.00	0.68	0.32
1 c	-12.28	1.82	0.00	0.00	0.11	0.09
1 right	-13.64	2.07	0.00	0.00	0.14	0.11
2 left	-4.14	3.16	0.00	0.00	-0.61	-0.03
2 a	-3.35	2.99	0.00	0.00	-0.58	1.59
2 b	0.30	2.25	0.00	0.00	3.45	0.11
2 c	0.27	2.29	0.00	0.00	4.63	-0.36
2 right	-7.67	4.20	0.00	0.00	0.60	0.35
3 left	-7.70	4.20	0.00	0.00	0.61	0.36
3 a	-6.66	3.95	0.00	0.00	0.54	0.34
3 b	-0.91	2.56	0.00	0.00	3.26	0.24
3 c	0.30	2.24	0.00	0.00	4.63	-0.37
3 right	-4.05	3.07	0.00	0.00	-0.60	-0.03
4 left	-13.26	2.02	0.00	0.00	0.14	0.11
4 a	-11.91	1.77	0.00	0.00	0.11	0.09
4 b	-7.11	0.94	0.00	0.00	0.67	0.31
4 c	-3.62	0.41	0.00	0.00	1.12	0.09
5 a	-0.45	-0.80	0.00	0.00	0.93	-0.68
5 b	0.93	1.31	0.00	0.00	0.05	0.06
5 c	-1.52	1.10	0.00	0.00	0.52	-0.27
6 a	-2.19	0.89	0.00	0.00	0.65	-0.53
6 b	0.93	1.33	0.00	0.00	0.03	-0.02
6 c	-0.01	-0.34	0.00	0.00	0.75	-0.23
7 top	-9.51	-3.84	0.00	0.00	5.89	-3.46
7 a	-8.59	-3.34	0.00	0.00	4.88	-3.89
7 b	-5.37	-1.50	0.00	0.00	2.42	-1.96
8 top	0.03	-3.68	0.00	0.00	8.84	-3.65
8 a	0.02	-3.09	0.00	0.00	7.44	-3.24
8 b	0.02	-0.89	0.00	0.00	3.44	-2.21
9 top	9.21	-3.80	0.00	0.00	10.12	-6.25
9 a	8.32	-3.31	0.00	0.00	8.54	-5.51
9 b	5.22	-1.48	0.00	0.00	4.12	-2.87

VEH: HL93- TANDEM BRUG(5.75.44) page 44
date 11/09/2009; time 13:23:29
Cline Avenue - Load Rating - Double Box Mainline - 4 Webs -

Summary of the results (Minimum)

Section	--- Deadload ----		----- P.T. ------		--- Live load ---	
	Moment	Ax.Frc	Moment	Ax.Frc	Moment	Ax.Frc
1 a	-3.85	0.44	0.00	0.00	-1.74	0.17
1 b	-7.41	0.98	0.00	0.00	-6.98	0.48
1 c	-12.28	1.82	0.00	0.00	-12.95	1.26
1 right	-13.64	2.07	0.00	0.00	-16.10	1.59
2 left	-4.14	3.16	0.00	0.00	-10.20	1.66
2 a	-3.35	2.99	0.00	0.00	-7.62	0.78
2 b	0.30	2.25	0.00	0.00	-1.43	0.74
2 c	0.27	2.29	0.00	0.00	-0.84	0.73
2 right	-7.67	4.20	0.00	0.00	-11.50	1.15
3 left	-7.70	4.20	0.00	0.00	-11.50	1.15
3 a	-6.66	3.95	0.00	0.00	-9.69	0.54
3 b	-0.91	2.56	0.00	0.00	-1.30	-0.28
3 c	0.30	2.24	0.00	0.00	-0.51	0.59
3 right	-4.05	3.07	0.00	0.00	-10.20	1.65
4 left	-13.26	2.02	0.00	0.00	-15.41	1.72
4 a	-11.91	1.77	0.00	0.00	-12.60	1.36
4 b	-7.11	0.94	0.00	0.00	-6.81	0.51
4 c	-3.62	0.41	0.00	0.00	-1.45	0.17
5 a	-0.45	-0.80	0.00	0.00	-0.52	0.27
5 b	0.93	1.31	0.00	0.00	-0.04	1.19
5 c	-1.52	1.10	0.00	0.00	-0.74	1.05
6 a	-2.19	0.89	0.00	0.00	-0.87	1.04
6 b	0.93	1.33	0.00	0.00	-0.04	1.19
6 c	-0.01	-0.34	0.00	0.00	-0.45	0.27
7 top	-9.51	-3.84	0.00	0.00	-10.46	-6.22
7 a	-8.59	-3.34	0.00	0.00	-8.83	-5.48
7 b	-5.37	-1.50	0.00	0.00	-4.26	-2.86
8 top	0.03	-3.68	0.00	0.00	-8.83	-3.65
8 a	0.02	-3.09	0.00	0.00	-7.43	-3.24
8 b	0.02	-0.89	0.00	0.00	-3.44	-2.21
9 top	9.21	-3.80	0.00	0.00	-5.89	-3.46
9 a	8.32	-3.31	0.00	0.00	-4.88	-3.89
9 b	5.22	-1.48	0.00	0.00	-2.42	-1.96

VEH: R1 - TOLL ROAD BRUG(5.75.44) page 43
date 11/09/2009; time 13:23:30
Cline Avenue - Load Rating - Double Box Mainline - 4 Webs -

Summary of the results (Maximum)

Section	--- Deadload ---- Moment	Ax.Frc	----- P.T. ------ Moment	Ax.Frc	--- Live load --- Moment	Ax.Frc
1 a	-3.85	0.44	0.00	0.00	0.58	0.15
1 b	-7.41	0.98	0.00	0.00	0.39	0.34
1 c	-12.28	1.82	0.00	0.00	0.06	0.22
1 right	-13.64	2.07	0.00	0.00	0.08	0.25
2 left	-4.14	3.16	0.00	0.00	0.34	2.05
2 a	-3.35	2.99	0.00	0.00	1.30	1.72
2 b	0.30	2.25	0.00	0.00	3.88	0.29
2 c	0.27	2.29	0.00	0.00	4.30	-0.32
2 right	-7.67	4.20	0.00	0.00	1.35	1.95
3 left	-7.70	4.20	0.00	0.00	0.80	0.70
3 a	-6.66	3.95	0.00	0.00	1.69	1.78
3 b	-0.91	2.56	0.00	0.00	3.13	0.49
3 c	0.30	2.24	0.00	0.00	4.30	-0.34
3 right	-4.05	3.07	0.00	0.00	0.34	2.04
4 left	-13.26	2.02	0.00	0.00	0.08	0.25
4 a	-11.91	1.77	0.00	0.00	0.06	0.22
4 b	-7.11	0.94	0.00	0.00	0.39	0.33
4 c	-3.62	0.41	0.00	0.00	0.57	0.14
5 a	-0.45	-0.80	0.00	0.00	1.47	-1.18
5 b	0.93	1.31	0.00	0.00	0.07	-0.05
5 c	-1.52	1.10	0.00	0.00	0.84	-0.20
6 a	-2.19	0.89	0.00	0.00	0.98	-0.34
6 b	0.93	1.33	0.00	0.00	0.05	-0.20
6 c	-0.01	-0.34	0.00	0.00	1.23	-0.75
7 top	-9.51	-3.84	0.00	0.00	6.19	-3.18
7 a	-8.59	-3.34	0.00	0.00	5.40	-2.78
7 b	-5.37	-1.50	0.00	0.00	3.01	-1.40
8 top	0.03	-3.68	0.00	0.00	11.64	-3.46
8 a	0.02	-3.09	0.00	0.00	10.05	-3.05
8 b	0.02	-0.89	0.00	0.00	4.86	-1.61
9 top	9.21	-3.80	0.00	0.00	12.46	-4.46
9 a	8.32	-3.31	0.00	0.00	10.83	-3.91
9 b	5.22	-1.48	0.00	0.00	5.62	-2.05

VEH: R1 - TOLL ROAD BRUG(5.75.44) page 44
date 11/09/2009; time 13:23:30
Cline Avenue - Load Rating - Double Box Mainline - 4 Webs -

Summary of the results (Minimum)

Section	--- Deadload ---- Moment	Ax.Frc	----- P.T. ------ Moment	Ax.Frc	--- Live load --- Moment	Ax.Frc
1 a	-3.85	0.44	0.00	0.00	-2.25	0.22
1 b	-7.41	0.98	0.00	0.00	-6.79	0.52
1 c	-12.28	1.82	0.00	0.00	-12.06	1.10
1 right	-13.64	2.07	0.00	0.00	-14.51	1.33
2 left	-4.14	3.16	0.00	0.00	-7.35	0.11
2 a	-3.35	2.99	0.00	0.00	-6.22	-0.27
2 b	0.30	2.25	0.00	0.00	-1.36	-0.06
2 c	0.27	2.29	0.00	0.00	-1.21	1.10
2 right	-7.67	4.20	0.00	0.00	-11.38	-0.03
3 left	-7.70	4.20	0.00	0.00	-11.39	-0.04
3 a	-6.66	3.95	0.00	0.00	-9.60	-0.12
3 b	-0.91	2.56	0.00	0.00	-1.56	0.19
3 c	0.30	2.24	0.00	0.00	-0.72	0.90
3 right	-4.05	3.07	0.00	0.00	-7.34	0.09
4 left	-13.26	2.02	0.00	0.00	-13.81	1.40
4 a	-11.91	1.77	0.00	0.00	-11.62	1.15
4 b	-7.11	0.94	0.00	0.00	-6.53	0.52
4 c	-3.62	0.41	0.00	0.00	-1.94	0.22
5 a	-0.45	-0.80	0.00	0.00	-0.88	0.48
5 b	0.93	1.31	0.00	0.00	-0.06	1.41
5 c	-1.52	1.10	0.00	0.00	-1.23	1.38
6 a	-2.19	0.89	0.00	0.00	-1.42	1.43
6 b	0.93	1.33	0.00	0.00	-0.06	1.41
6 c	-0.01	-0.34	0.00	0.00	-0.76	0.49
7 top	-9.51	-3.84	0.00	0.00	-12.86	-4.45
7 a	-8.59	-3.34	0.00	0.00	-11.18	-3.90
7 b	-5.37	-1.50	0.00	0.00	-5.81	-2.05
8 top	0.03	-3.68	0.00	0.00	-11.63	-3.46
8 a	0.02	-3.09	0.00	0.00	-10.04	-3.04
8 b	0.02	-0.89	0.00	0.00	-4.86	-1.61
9 top	9.21	-3.80	0.00	0.00	-6.18	-3.18
9 a	8.32	-3.31	0.00	0.00	-5.39	-2.78
9 b	5.22	-1.48	0.00	0.00	-3.01	-1.40

VEH: R2 - TOLL ROAD BRUG(5.75.44) page 43
date 11/09/2009; time 13:23:30
Cline Avenue - Load Rating - Double Box Mainline - 4 Webs -

Summary of the results (Maximum)

Section	--- Deadload ----		----- P.T. ------		--- Live load ---	
	Moment	Ax.Frc	Moment	Ax.Frc	Moment	Ax.Frc
1 a	-3.85	0.44	0.00	0.00	0.91	0.11
1 b	-7.41	0.98	0.00	0.00	0.70	0.25
1 c	-12.28	1.82	0.00	0.00	0.03	0.11
1 right	-13.64	2.07	0.00	0.00	0.04	0.12
2 left	-4.14	3.16	0.00	0.00	0.72	1.81
2 a	-3.35	2.99	0.00	0.00	1.86	1.47
2 b	0.30	2.25	0.00	0.00	3.80	0.27
2 c	0.27	2.29	0.00	0.00	4.09	-0.27
2 right	-7.67	4.20	0.00	0.00	1.49	1.84
3 left	-7.70	4.20	0.00	0.00	1.41	1.75
3 a	-6.66	3.95	0.00	0.00	1.89	1.54
3 b	-0.91	2.56	0.00	0.00	3.06	0.45
3 c	0.30	2.24	0.00	0.00	4.09	-0.28
3 right	-4.05	3.07	0.00	0.00	0.72	1.80
4 left	-13.26	2.02	0.00	0.00	0.04	0.12
4 a	-11.91	1.77	0.00	0.00	0.03	0.10
4 b	-7.11	0.94	0.00	0.00	0.70	0.24
4 c	-3.62	0.41	0.00	0.00	0.90	0.11
5 a	-0.45	-0.80	0.00	0.00	1.36	-1.10
5 b	0.93	1.31	0.00	0.00	0.06	-0.09
5 c	-1.52	1.10	0.00	0.00	0.78	-0.16
6 a	-2.19	0.89	0.00	0.00	0.91	-0.29
6 b	0.93	1.33	0.00	0.00	0.04	-0.23
6 c	-0.01	-0.34	0.00	0.00	1.15	-0.74
7 top	-9.51	-3.84	0.00	0.00	5.33	-1.36
7 a	-8.59	-3.34	0.00	0.00	4.65	-1.18
7 b	-5.37	-1.50	0.00	0.00	2.50	-1.25
8 top	0.03	-3.68	0.00	0.00	10.37	-3.51
8 a	0.02	-3.09	0.00	0.00	8.94	-2.99
8 b	0.02	-0.89	0.00	0.00	4.31	-1.41
9 top	9.21	-3.80	0.00	0.00	10.85	-4.71
9 a	8.32	-3.31	0.00	0.00	9.40	-3.97
9 b	5.22	-1.48	0.00	0.00	4.88	-1.82

VEH: R2 - TOLL ROAD BRUG(5.75.44) page 44
date 11/09/2009; time 13:23:30
Cline Avenue - Load Rating - Double Box Mainline - 4 Webs -

Summary of the results (Minimum)

Section	--- Deadload ----		----- P.T. ------		--- Live load ---	
	Moment	Ax.Frc	Moment	Ax.Frc	Moment	Ax.Frc
1 a	-3.85	0.44	0.00	0.00	-1.44	0.16
1 b	-7.41	0.98	0.00	0.00	-5.64	0.37
1 c	-12.28	1.82	0.00	0.00	-9.69	0.87
1 right	-13.64	2.07	0.00	0.00	-12.26	1.14
2 left	-4.14	3.16	0.00	0.00	-6.16	0.10
2 a	-3.35	2.99	0.00	0.00	-5.36	-0.25
2 b	0.30	2.25	0.00	0.00	-1.30	-0.04
2 c	0.27	2.29	0.00	0.00	-1.03	0.97
2 right	-7.67	4.20	0.00	0.00	-9.88	-0.02
3 left	-7.70	4.20	0.00	0.00	-9.89	-0.03
3 a	-6.66	3.95	0.00	0.00	-8.25	-0.12
3 b	-0.91	2.56	0.00	0.00	-1.72	0.20
3 c	0.30	2.24	0.00	0.00	-0.61	0.79
3 right	-4.05	3.07	0.00	0.00	-6.15	0.09
4 left	-13.26	2.02	0.00	0.00	-11.61	1.24
4 a	-11.91	1.77	0.00	0.00	-9.38	0.93
4 b	-7.11	0.94	0.00	0.00	-5.47	0.37
4 c	-3.62	0.41	0.00	0.00	-1.16	0.16
5 a	-0.45	-0.80	0.00	0.00	-0.83	0.47
5 b	0.93	1.31	0.00	0.00	-0.05	1.17
5 c	-1.52	1.10	0.00	0.00	-1.16	1.15
6 a	-2.19	0.89	0.00	0.00	-1.32	1.20
6 b	0.93	1.33	0.00	0.00	-0.05	1.17
6 c	-0.01	-0.34	0.00	0.00	-0.71	0.48
7 top	-9.51	-3.84	0.00	0.00	-11.20	-4.65
7 a	-8.59	-3.34	0.00	0.00	-9.70	-3.92
7 b	-5.37	-1.50	0.00	0.00	-5.04	-1.81
8 top	0.03	-3.68	0.00	0.00	-10.36	-3.51
8 a	0.02	-3.09	0.00	0.00	-8.93	-2.99
8 b	0.02	-0.89	0.00	0.00	-4.31	-1.41
9 top	9.21	-3.80	0.00	0.00	-5.32	-1.36
9 a	8.32	-3.31	0.00	0.00	-4.64	-1.18
9 b	5.22	-1.48	0.00	0.00	-2.50	-1.25

II_B_R3_EL.OUT 9/11/2009

VEH: R3 - TOLL ROAD BRUG(5.75.44) page 43
date 11/09/2009; time 13:23:31
Cline Avenue - Load Rating - Double Box Mainline - 4 Webs -

Summary of the results (Maximum)

Section	--- Deadload ---- Moment	Ax.Frc	----- P.T. ------ Moment	Ax.Frc	--- Live load --- Moment	Ax.Frc
1 a	-3.85	0.44	0.00	0.00	0.76	0.04
1 b	-7.41	0.98	0.00	0.00	0.49	0.24
1 c	-12.28	1.82	0.00	0.00	0.02	0.15
1 right	-13.64	2.07	0.00	0.00	0.02	0.17
2 left	-4.14	3.16	0.00	0.00	1.01	1.77
2 a	-3.35	2.99	0.00	0.00	1.98	1.48
2 b	0.30	2.25	0.00	0.00	3.76	0.25
2 c	0.27	2.29	0.00	0.00	3.85	-0.37
2 right	-7.67	4.20	0.00	0.00	1.45	1.72
3 left	-7.70	4.20	0.00	0.00	1.44	1.72
3 a	-6.66	3.95	0.00	0.00	1.89	1.55
3 b	-0.91	2.56	0.00	0.00	2.96	0.34
3 c	0.30	2.24	0.00	0.00	3.85	-0.38
3 right	-4.05	3.07	0.00	0.00	1.01	1.77
4 left	-13.26	2.02	0.00	0.00	0.02	0.16
4 a	-11.91	1.77	0.00	0.00	0.02	0.14
4 b	-7.11	0.94	0.00	0.00	0.49	0.23
4 c	-3.62	0.41	0.00	0.00	0.75	0.04
5 a	-0.45	-0.80	0.00	0.00	1.55	-1.19
5 b	0.93	1.31	0.00	0.00	0.05	-0.19
5 c	-1.52	1.10	0.00	0.00	0.88	-0.22
6 a	-2.19	0.89	0.00	0.00	1.03	-0.37
6 b	0.93	1.33	0.00	0.00	0.03	-0.35
6 c	-0.01	-0.34	0.00	0.00	1.31	-0.83
7 top	-9.51	-3.84	0.00	0.00	5.62	-1.65
7 a	-8.59	-3.34	0.00	0.00	4.86	-1.45
7 b	-5.37	-1.50	0.00	0.00	2.49	-0.72
8 top	0.03	-3.68	0.00	0.00	11.27	-3.47
8 a	0.02	-3.09	0.00	0.00	9.64	-3.06
8 b	0.02	-0.89	0.00	0.00	4.52	-1.62
9 top	9.21	-3.80	0.00	0.00	11.25	-4.38
9 a	8.32	-3.31	0.00	0.00	9.68	-3.85
9 b	5.22	-1.48	0.00	0.00	4.86	-2.03

II_B_R3_EL.OUT 9/11/2009

VEH: R3 - TOLL ROAD BRUG(5.75.44) page 44
date 11/09/2009; time 13:23:31
Cline Avenue - Load Rating - Double Box Mainline - 4 Webs -

Summary of the results (Minimum)

Section	--- Deadload ---- Moment	Ax.Frc	----- P.T. ------ Moment	Ax.Frc	--- Live load --- Moment	Ax.Frc
1 a	-3.85	0.44	0.00	0.00	-1.54	0.10
1 b	-7.41	0.98	0.00	0.00	-5.57	0.28
1 c	-12.28	1.82	0.00	0.00	-10.16	0.77
1 right	-13.64	2.07	0.00	0.00	-12.57	0.98
2 left	-4.14	3.16	0.00	0.00	-6.63	-0.24
2 a	-3.35	2.99	0.00	0.00	-6.01	-0.28
2 b	0.30	2.25	0.00	0.00	-1.57	-0.19
2 c	0.27	2.29	0.00	0.00	-0.93	0.95
2 right	-7.67	4.20	0.00	0.00	-10.53	-0.10
3 left	-7.70	4.20	0.00	0.00	-10.54	-0.10
3 a	-6.66	3.95	0.00	0.00	-9.37	-0.08
3 b	-0.91	2.56	0.00	0.00	-2.03	0.22
3 c	0.30	2.24	0.00	0.00	-0.57	0.44
3 right	-4.05	3.07	0.00	0.00	-6.62	-0.25
4 left	-13.26	2.02	0.00	0.00	-12.00	1.05
4 a	-11.91	1.77	0.00	0.00	-9.86	0.81
4 b	-7.11	0.94	0.00	0.00	-5.41	0.28
4 c	-3.62	0.41	0.00	0.00	-1.29	0.09
5 a	-0.45	-0.80	0.00	0.00	-0.94	0.56
5 b	0.93	1.31	0.00	0.00	-0.05	1.14
5 c	-1.52	1.10	0.00	0.00	-1.31	0.95
6 a	-2.19	0.89	0.00	0.00	-1.50	1.02
6 b	0.93	1.33	0.00	0.00	-0.05	1.14
6 c	-0.01	-0.34	0.00	0.00	-0.81	0.57
7 top	-9.51	-3.84	0.00	0.00	-11.58	-4.35
7 a	-8.59	-3.34	0.00	0.00	-9.96	-3.83
7 b	-5.37	-1.50	0.00	0.00	-5.01	-2.02
8 top	0.03	-3.68	0.00	0.00	-11.26	-3.47
8 a	0.02	-3.09	0.00	0.00	-9.62	-3.06
8 b	0.02	-0.89	0.00	0.00	-4.51	-1.62
9 top	9.21	-3.80	0.00	0.00	-5.61	-1.65
9 a	8.32	-3.31	0.00	0.00	-4.85	-1.45
9 b	5.22	-1.48	0.00	0.00	-2.49	-0.72

VEH: R4 - MICHIGAN T BRUG(5.75.44) page 43
date 11/09/2009; time 13:23:32
Cline Avenue - Load Rating - Double Box Mainline - 4 Webs -

Summary of the results (Maximum)

Section	--- Deadload ---- Moment	Ax.Frc	----- P.T. ------ Moment	Ax.Frc	--- Live load --- Moment	Ax.Frc
1 a	-3.85	0.44	0.00	0.00	0.58	0.13
1 b	-7.41	0.98	0.00	0.00	0.50	0.27
1 c	-12.28	1.82	0.00	0.00	0.22	0.34
1 right	-13.64	2.07	0.00	0.00	0.02	0.38
2 left	-4.14	3.16	0.00	0.00	2.58	1.93
2 a	-3.35	2.99	0.00	0.00	3.29	1.60
2 b	0.30	2.25	0.00	0.00	4.26	0.38
2 c	0.27	2.29	0.00	0.00	3.95	-0.30
2 right	-7.67	4.20	0.00	0.00	2.89	1.66
3 left	-7.70	4.20	0.00	0.00	2.88	1.66
3 a	-6.66	3.95	0.00	0.00	3.04	1.62
3 b	-0.91	2.56	0.00	0.00	3.08	0.59
3 c	0.30	2.24	0.00	0.00	3.95	-0.31
3 right	-4.05	3.07	0.00	0.00	2.58	1.92
4 left	-13.26	2.02	0.00	0.00	0.02	0.37
4 a	-11.91	1.77	0.00	0.00	0.22	0.33
4 b	-7.11	0.94	0.00	0.00	0.50	0.26
4 c	-3.62	0.41	0.00	0.00	0.58	0.12
5 a	-0.45	-0.80	0.00	0.00	1.85	-1.50
5 b	0.93	1.31	0.00	0.00	0.08	-0.21
5 c	-1.52	1.10	0.00	0.00	1.06	-0.15
6 a	-2.19	0.89	0.00	0.00	1.21	-0.29
6 b	0.93	1.33	0.00	0.00	0.05	-0.42
6 c	-0.01	-0.34	0.00	0.00	1.58	-1.14
7 top	-9.51	-3.84	0.00	0.00	6.34	-1.25
7 a	-8.59	-3.34	0.00	0.00	5.59	-1.09
7 b	-5.37	-1.50	0.00	0.00	3.03	-0.53
8 top	0.03	-3.68	0.00	0.00	12.85	-2.94
8 a	0.02	-3.09	0.00	0.00	11.12	-2.50
8 b	0.02	-0.89	0.00	0.00	5.45	-1.18
9 top	9.21	-3.80	0.00	0.00	12.88	-3.69
9 a	8.32	-3.31	0.00	0.00	11.24	-3.10
9 b	5.22	-1.48	0.00	0.00	5.95	-1.45

VEH: R4 - MICHIGAN T BRUG(5.75.44) page 44
date 11/09/2009; time 13:23:32
Cline Avenue - Load Rating - Double Box Mainline - 4 Webs -

Summary of the results (Minimum)

Section	--- Deadload ---- Moment	Ax.Frc	----- P.T. ------ Moment	Ax.Frc	--- Live load --- Moment	Ax.Frc
1 a	-3.85	0.44	0.00	0.00	-1.75	0.16
1 b	-7.41	0.98	0.00	0.00	-5.63	0.34
1 c	-12.28	1.82	0.00	0.00	-9.51	0.69
1 right	-13.64	2.07	0.00	0.00	-11.71	0.79
2 left	-4.14	3.16	0.00	0.00	-6.50	-0.30
2 a	-3.35	2.99	0.00	0.00	-5.85	-0.33
2 b	0.30	2.25	0.00	0.00	-1.82	0.03
2 c	0.27	2.29	0.00	0.00	-1.23	1.21
2 right	-7.67	4.20	0.00	0.00	-10.86	-0.13
3 left	-7.70	4.20	0.00	0.00	-10.87	-0.14
3 a	-6.66	3.95	0.00	0.00	-9.96	-0.12
3 b	-0.91	2.56	0.00	0.00	-2.29	0.32
3 c	0.30	2.24	0.00	0.00	-0.72	0.99
3 right	-4.05	3.07	0.00	0.00	-6.49	-0.31
4 left	-13.26	2.02	0.00	0.00	-11.06	0.77
4 a	-11.91	1.77	0.00	0.00	-9.16	0.67
4 b	-7.11	0.94	0.00	0.00	-5.40	0.36
4 c	-3.62	0.41	0.00	0.00	-1.46	0.16
5 a	-0.45	-0.80	0.00	0.00	-1.14	0.68
5 b	0.93	1.31	0.00	0.00	-0.06	1.30
5 c	-1.52	1.10	0.00	0.00	-1.59	1.29
6 a	-2.19	0.89	0.00	0.00	-1.81	1.39
6 b	0.93	1.33	0.00	0.00	-0.06	1.30
6 c	-0.01	-0.34	0.00	0.00	-0.99	0.68
7 top	-9.51	-3.84	0.00	0.00	-13.27	-3.65
7 a	-8.59	-3.34	0.00	0.00	-11.58	-3.07
7 b	-5.37	-1.50	0.00	0.00	-6.14	-1.44
8 top	0.03	-3.68	0.00	0.00	-12.83	-2.94
8 a	0.02	-3.09	0.00	0.00	-11.10	-2.50
8 b	0.02	-0.89	0.00	0.00	-5.44	-1.18
9 top	9.21	-3.80	0.00	0.00	-6.33	-1.25
9 a	8.32	-3.31	0.00	0.00	-5.58	-1.09
9 b	5.22	-1.48	0.00	0.00	-3.02	-0.53

VEH: R5 - MICHIGAN T BRUG(5.75.44) page 43
date 11/09/2009; time 13:23:32
Cline Avenue - Load Rating - Double Box Mainline - 4 Webs -

Summary of the results (Maximum)

Section	--- Deadload ----		----- P.T. ------		--- Live load ---	
	Moment	Ax.Frc	Moment	Ax.Frc	Moment	Ax.Frc
1 a	-3.85	0.44	0.00	0.00	0.24	0.16
1 b	-7.41	0.98	0.00	0.00	0.11	0.38
1 c	-12.28	1.82	0.00	0.00	0.03	0.16
1 right	-13.64	2.07	0.00	0.00	0.04	0.18
2 left	-4.14	3.16	0.00	0.00	1.77	2.19
2 a	-3.35	2.99	0.00	0.00	2.36	1.91
2 b	0.30	2.25	0.00	0.00	4.40	0.39
2 c	0.27	2.29	0.00	0.00	4.33	-0.39
2 right	-7.67	4.20	0.00	0.00	2.31	2.18
3 left	-7.70	4.20	0.00	0.00	2.25	2.15
3 a	-6.66	3.95	0.00	0.00	2.48	1.99
3 b	-0.91	2.56	0.00	0.00	3.25	0.64
3 c	0.30	2.24	0.00	0.00	4.33	-0.40
3 right	-4.05	3.07	0.00	0.00	1.77	2.18
4 left	-13.26	2.02	0.00	0.00	0.04	0.18
4 a	-11.91	1.77	0.00	0.00	0.03	0.16
4 b	-7.11	0.94	0.00	0.00	0.11	0.37
4 c	-3.62	0.41	0.00	0.00	0.23	0.15
5 a	-0.45	-0.80	0.00	0.00	1.95	-1.57
5 b	0.93	1.31	0.00	0.00	0.08	-0.16
5 c	-1.52	1.10	0.00	0.00	1.12	-0.23
6 a	-2.19	0.89	0.00	0.00	1.30	-0.41
6 b	0.93	1.33	0.00	0.00	0.05	-0.36
6 c	-0.01	-0.34	0.00	0.00	1.65	-1.09
7 top	-9.51	-3.84	0.00	0.00	7.35	-1.65
7 a	-8.59	-3.34	0.00	0.00	6.45	-1.46
7 b	-5.37	-1.50	0.00	0.00	3.44	-0.75
8 top	0.03	-3.68	0.00	0.00	14.38	-3.09
8 a	0.02	-3.09	0.00	0.00	12.49	-2.78
8 b	0.02	-0.89	0.00	0.00	6.06	-1.58
9 top	9.21	-3.80	0.00	0.00	14.76	-3.61
9 a	8.32	-3.31	0.00	0.00	12.93	-3.25
9 b	5.22	-1.48	0.00	0.00	6.78	-1.90

VEH: R5 - MICHIGAN T BRUG(5.75.44) page 44
date 11/09/2009; time 13:23:32
Cline Avenue - Load Rating - Double Box Mainline - 4 Webs -

Summary of the results (Minimum)

Section	--- Deadload ----		----- P.T. ------		--- Live load ---	
	Moment	Ax.Frc	Moment	Ax.Frc	Moment	Ax.Frc
1 a	-3.85	0.44	0.00	0.00	-2.77	0.23
1 b	-7.41	0.98	0.00	0.00	-7.27	0.52
1 c	-12.28	1.82	0.00	0.00	-13.02	1.04
1 right	-13.64	2.07	0.00	0.00	-15.19	1.20
2 left	-4.14	3.16	0.00	0.00	-8.02	-0.32
2 a	-3.35	2.99	0.00	0.00	-7.22	-0.35
2 b	0.30	2.25	0.00	0.00	-1.83	0.07
2 c	0.27	2.29	0.00	0.00	-1.40	1.34
2 right	-7.67	4.20	0.00	0.00	-12.99	-0.18
3 left	-7.70	4.20	0.00	0.00	-13.00	-0.15
3 a	-6.66	3.95	0.00	0.00	-11.41	-0.15
3 b	-0.91	2.56	0.00	0.00	-2.04	0.29
3 c	0.30	2.24	0.00	0.00	-0.83	1.10
3 right	-4.05	3.07	0.00	0.00	-8.01	-0.33
4 left	-13.26	2.02	0.00	0.00	-14.47	1.22
4 a	-11.91	1.77	0.00	0.00	-12.51	1.06
4 b	-7.11	0.94	0.00	0.00	-6.95	0.53
4 c	-3.62	0.41	0.00	0.00	-2.43	0.22
5 a	-0.45	-0.80	0.00	0.00	-1.19	0.68
5 b	0.93	1.31	0.00	0.00	-0.07	1.60
5 c	-1.52	1.10	0.00	0.00	-1.66	1.53
6 a	-2.19	0.89	0.00	0.00	-1.90	1.62
6 b	0.93	1.33	0.00	0.00	-0.07	1.60
6 c	-0.01	-0.34	0.00	0.00	-1.02	0.69
7 top	-9.51	-3.84	0.00	0.00	-15.20	-3.63
7 a	-8.59	-3.34	0.00	0.00	-13.32	-3.27
7 b	-5.37	-1.50	0.00	0.00	-6.99	-1.91
8 top	0.03	-3.68	0.00	0.00	-14.36	-3.09
8 a	0.02	-3.09	0.00	0.00	-12.47	-2.78
8 b	0.02	-0.89	0.00	0.00	-6.05	-1.58
9 top	9.21	-3.80	0.00	0.00	-7.34	-1.64
9 a	8.32	-3.31	0.00	0.00	-6.44	-1.46
9 b	5.22	-1.48	0.00	0.00	-3.43	-0.75

II_B_S1_EL.OUT 9/11/2009

VEH: S1 - SPECIAL TR BRUG(5.75.44) page 43
date 11/09/2009; time 13:23:33
Cline Avenue - Load Rating - Double Box Mainline - 4 Webs -

Summary of the results (Maximum)

Section	--- Deadload ----		----- P.T. ------		--- Live load ---	
	Moment	Ax.Frc	Moment	Ax.Frc	Moment	Ax.Frc
1 a	-3.85	0.44	0.00	0.00	0.92	0.06
1 b	-7.41	0.98	0.00	0.00	0.60	0.32
1 c	-12.28	1.82	0.00	0.00	0.02	0.21
1 right	-13.64	2.07	0.00	0.00	0.03	0.24
2 left	-4.14	3.16	0.00	0.00	2.00	2.39
2 a	-3.35	2.99	0.00	0.00	3.15	2.02
2 b	0.30	2.25	0.00	0.00	5.16	0.36
2 c	0.27	2.29	0.00	0.00	5.09	-0.58
2 right	-7.67	4.20	0.00	0.00	2.38	2.23
3 left	-7.70	4.20	0.00	0.00	2.37	2.23
3 a	-6.66	3.95	0.00	0.00	2.96	1.89
3 b	-0.91	2.56	0.00	0.00	4.08	0.16
3 c	0.30	2.24	0.00	0.00	5.09	-0.58
3 right	-4.05	3.07	0.00	0.00	2.00	2.39
4 left	-13.26	2.02	0.00	0.00	0.03	0.24
4 a	-11.91	1.77	0.00	0.00	0.02	0.21
4 b	-7.11	0.94	0.00	0.00	0.59	0.31
4 c	-3.62	0.41	0.00	0.00	0.91	0.05
5 a	-0.45	-0.80	0.00	0.00	2.23	-1.72
5 b	0.93	1.31	0.00	0.00	0.08	-0.34
5 c	-1.52	1.10	0.00	0.00	1.27	-0.27
6 a	-2.19	0.89	0.00	0.00	1.48	-0.48
6 b	0.93	1.33	0.00	0.00	0.05	-0.57
6 c	-0.01	-0.34	0.00	0.00	1.90	-1.23
7 top	-9.51	-3.84	0.00	0.00	7.94	-2.21
7 a	-8.59	-3.34	0.00	0.00	6.88	-1.94
7 b	-5.37	-1.50	0.00	0.00	3.55	-0.97
8 top	0.03	-3.68	0.00	0.00	15.81	-4.46
8 a	0.02	-3.09	0.00	0.00	13.57	-3.95
8 b	0.02	-0.89	0.00	0.00	6.38	-2.11
9 top	9.21	-3.80	0.00	0.00	15.66	-5.52
9 a	8.32	-3.31	0.00	0.00	13.51	-4.87
9 b	5.22	-1.48	0.00	0.00	6.82	-2.60

II_B_S1_EL.OUT 9/11/2009

VEH: S1 - SPECIAL TR BRUG(5.75.44) page 44
date 11/09/2009; time 13:23:33
Cline Avenue - Load Rating - Double Box Mainline - 4 Webs -

Summary of the results (Minimum)

Section	--- Deadload ----		----- P.T. ------		--- Live load ---	
	Moment	Ax.Frc	Moment	Ax.Frc	Moment	Ax.Frc
1 a	-3.85	0.44	0.00	0.00	-2.13	0.13
1 b	-7.41	0.98	0.00	0.00	-7.42	0.36
1 c	-12.28	1.82	0.00	0.00	-13.52	0.98
1 right	-13.64	2.07	0.00	0.00	-16.62	1.24
2 left	-4.14	3.16	0.00	0.00	-9.21	-0.40
2 a	-3.35	2.99	0.00	0.00	-8.34	-0.46
2 b	0.30	2.25	0.00	0.00	-2.25	-0.36
2 c	0.27	2.29	0.00	0.00	-1.29	1.37
2 right	-7.67	4.20	0.00	0.00	-14.35	-0.23
3 left	-7.70	4.20	0.00	0.00	-14.37	-0.23
3 a	-6.66	3.95	0.00	0.00	-13.19	-0.04
3 b	-0.91	2.56	0.00	0.00	-2.93	0.38
3 c	0.30	2.24	0.00	0.00	-0.82	0.69
3 right	-4.05	3.07	0.00	0.00	-9.19	-0.41
4 left	-13.26	2.02	0.00	0.00	-15.86	1.32
4 a	-11.91	1.77	0.00	0.00	-13.10	1.03
4 b	-7.11	0.94	0.00	0.00	-7.19	0.37
4 c	-3.62	0.41	0.00	0.00	-1.80	0.12
5 a	-0.45	-0.80	0.00	0.00	-1.35	0.82
5 b	0.93	1.31	0.00	0.00	-0.07	1.60
5 c	-1.52	1.10	0.00	0.00	-1.91	1.22
6 a	-2.19	0.89	0.00	0.00	-2.17	1.32
6 b	0.93	1.33	0.00	0.00	-0.07	1.60
6 c	-0.01	-0.34	0.00	0.00	-1.17	0.82
7 top	-9.51	-3.84	0.00	0.00	-16.10	-5.49
7 a	-8.59	-3.34	0.00	0.00	-13.89	-4.84
7 b	-5.37	-1.50	0.00	0.00	-7.02	-2.59
8 top	0.03	-3.68	0.00	0.00	-15.78	-4.46
8 a	0.02	-3.09	0.00	0.00	-13.54	-3.95
8 b	0.02	-0.89	0.00	0.00	-6.37	-2.11
9 top	9.21	-3.80	0.00	0.00	-7.93	-2.21
9 a	8.32	-3.31	0.00	0.00	-6.87	-1.94
9 b	5.22	-1.48	0.00	0.00	-3.54	-0.97

VEH: S2 - SPECIAL TR BRUG(5.75.44) page 43
date 11/09/2009; time 13:23:33
Cline Avenue - Load Rating - Double Box Mainline - 4 Webs -

Summary of the results (Maximum)

Section	--- Deadload ----		----- P.T. ------		--- Live load ---	
	Moment	Ax.Frc	Moment	Ax.Frc	Moment	Ax.Frc
1 a	-3.85	0.44	0.00	0.00	0.74	0.12
1 b	-7.41	0.98	0.00	0.00	0.46	0.33
1 c	-12.28	1.82	0.00	0.00	0.04	0.21
1 right	-13.64	2.07	0.00	0.00	0.05	0.23
2 left	-4.14	3.16	0.00	0.00	2.29	2.32
2 a	-3.35	2.99	0.00	0.00	3.24	1.96
2 b	0.30	2.25	0.00	0.00	5.00	0.36
2 c	0.27	2.29	0.00	0.00	4.83	-0.58
2 right	-7.67	4.20	0.00	0.00	2.60	2.14
3 left	-7.70	4.20	0.00	0.00	2.59	2.14
3 a	-6.66	3.95	0.00	0.00	3.01	1.81
3 b	-0.91	2.56	0.00	0.00	3.84	0.15
3 c	0.30	2.24	0.00	0.00	4.83	-0.59
3 right	-4.05	3.07	0.00	0.00	2.29	2.31
4 left	-13.26	2.02	0.00	0.00	0.05	0.23
4 a	-11.91	1.77	0.00	0.00	0.04	0.20
4 b	-7.11	0.94	0.00	0.00	0.46	0.32
4 c	-3.62	0.41	0.00	0.00	0.73	0.12
5 a	-0.45	-0.80	0.00	0.00	2.20	-1.71
5 b	0.93	1.31	0.00	0.00	0.07	-0.34
5 c	-1.52	1.10	0.00	0.00	1.25	-0.26
6 a	-2.19	0.89	0.00	0.00	1.46	-0.47
6 b	0.93	1.33	0.00	0.00	0.05	-0.57
6 c	-0.01	-0.34	0.00	0.00	1.87	-1.24
7 top	-9.51	-3.84	0.00	0.00	7.82	-1.97
7 a	-8.59	-3.34	0.00	0.00	6.81	-1.73
7 b	-5.37	-1.50	0.00	0.00	3.54	-0.88
8 top	0.03	-3.68	0.00	0.00	15.53	-3.94
8 a	0.02	-3.09	0.00	0.00	13.38	-3.47
8 b	0.02	-0.89	0.00	0.00	6.35	-1.85
9 top	9.21	-3.80	0.00	0.00	15.39	-4.81
9 a	8.32	-3.31	0.00	0.00	13.33	-4.22
9 b	5.22	-1.48	0.00	0.00	6.79	-2.24

VEH: S2 - SPECIAL TR BRUG(5.75.44) page 44
date 11/09/2009; time 13:23:33
Cline Avenue - Load Rating - Double Box Mainline - 4 Webs -

Summary of the results (Minimum)

Section	--- Deadload ----		----- P.T. ------		--- Live load ---	
	Moment	Ax.Frc	Moment	Ax.Frc	Moment	Ax.Frc
1 a	-3.85	0.44	0.00	0.00	-2.24	0.15
1 b	-7.41	0.98	0.00	0.00	-7.25	0.38
1 c	-12.28	1.82	0.00	0.00	-13.01	0.93
1 right	-13.64	2.07	0.00	0.00	-15.78	1.16
2 left	-4.14	3.16	0.00	0.00	-8.89	-0.42
2 a	-3.35	2.99	0.00	0.00	-8.05	-0.47
2 b	0.30	2.25	0.00	0.00	-2.12	-0.31
2 c	0.27	2.29	0.00	0.00	-1.28	1.37
2 right	-7.67	4.20	0.00	0.00	-13.97	-0.04
3 left	-7.70	4.20	0.00	0.00	-13.98	-0.05
3 a	-6.66	3.95	0.00	0.00	-12.83	-0.04
3 b	-0.91	2.56	0.00	0.00	-2.73	0.38
3 c	0.30	2.24	0.00	0.00	-0.82	0.69
3 right	-4.05	3.07	0.00	0.00	-8.87	-0.43
4 left	-13.26	2.02	0.00	0.00	-15.03	1.24
4 a	-11.91	1.77	0.00	0.00	-12.57	0.98
4 b	-7.11	0.94	0.00	0.00	-7.00	0.39
4 c	-3.62	0.41	0.00	0.00	-1.91	0.15
5 a	-0.45	-0.80	0.00	0.00	-1.34	0.81
5 b	0.93	1.31	0.00	0.00	-0.07	1.63
5 c	-1.52	1.10	0.00	0.00	-1.88	1.20
6 a	-2.19	0.89	0.00	0.00	-2.15	1.31
6 b	0.93	1.33	0.00	0.00	-0.07	1.63
6 c	-0.01	-0.34	0.00	0.00	-1.16	0.81
7 top	-9.51	-3.84	0.00	0.00	-15.82	-4.79
7 a	-8.59	-3.34	0.00	0.00	-13.70	-4.20
7 b	-5.37	-1.50	0.00	0.00	-6.99	-2.24
8 top	0.03	-3.68	0.00	0.00	-15.50	-3.94
8 a	0.02	-3.09	0.00	0.00	-13.36	-3.47
8 b	0.02	-0.89	0.00	0.00	-6.34	-1.85
9 top	9.21	-3.80	0.00	0.00	-7.80	-1.96
9 a	8.32	-3.31	0.00	0.00	-6.79	-1.73
9 b	5.22	-1.48	0.00	0.00	-3.54	-0.88

VEH: S3 - SPECIAL TR BRUG(5.75.44) page 43
date 11/09/2009; time 13:23:34
Cline Avenue - Load Rating - Double Box Mainline - 4 Webs -

Summary of the results (Maximum)

Section	--- Deadload ---- Moment	Ax.Frc	----- P.T. ------ Moment	Ax.Frc	--- Live load --- Moment	Ax.Frc
1 a	-3.85	0.44	0.00	0.00	0.66	0.19
1 b	-7.41	0.98	0.00	0.00	0.41	0.47
1 c	-12.28	1.82	0.00	0.00	0.05	0.28
1 right	-13.64	2.07	0.00	0.00	0.06	0.32
2 left	-4.14	3.16	0.00	0.00	3.47	3.03
2 a	-3.35	2.99	0.00	0.00	4.43	2.59
2 b	0.30	2.25	0.00	0.00	6.47	0.52
2 c	0.27	2.29	0.00	0.00	6.09	-0.72
2 right	-7.67	4.20	0.00	0.00	3.84	2.79
3 left	-7.70	4.20	0.00	0.00	3.82	2.79
3 a	-6.66	3.95	0.00	0.00	4.15	2.42
3 b	-0.91	2.56	0.00	0.00	4.75	0.34
3 c	0.30	2.24	0.00	0.00	6.09	-0.73
3 right	-4.05	3.07	0.00	0.00	3.48	3.02
4 left	-13.26	2.02	0.00	0.00	0.06	0.31
4 a	-11.91	1.77	0.00	0.00	0.05	0.27
4 b	-7.11	0.94	0.00	0.00	0.40	0.45
4 c	-3.62	0.41	0.00	0.00	0.65	0.18
5 a	-0.45	-0.80	0.00	0.00	2.95	-2.33
5 b	0.93	1.31	0.00	0.00	0.11	-0.43
5 c	-1.52	1.10	0.00	0.00	1.68	-0.33
6 a	-2.19	0.89	0.00	0.00	1.95	-0.58
6 b	0.93	1.33	0.00	0.00	0.07	-0.73
6 c	-0.01	-0.34	0.00	0.00	2.51	-1.72
7 top	-9.51	-3.84	0.00	0.00	10.39	-2.35
7 a	-8.59	-3.34	0.00	0.00	9.10	-2.07
7 b	-5.37	-1.50	0.00	0.00	4.80	-1.05
8 top	0.03	-3.68	0.00	0.00	20.73	-4.57
8 a	0.02	-3.09	0.00	0.00	17.94	-4.04
8 b	0.02	-0.89	0.00	0.00	8.61	-2.18
9 top	9.21	-3.80	0.00	0.00	20.58	-5.45
9 a	8.32	-3.31	0.00	0.00	17.94	-4.80
9 b	5.22	-1.48	0.00	0.00	9.27	-2.62

VEH: S3 - SPECIAL TR BRUG(5.75.44) page 44
date 11/09/2009; time 13:23:34
Cline Avenue - Load Rating - Double Box Mainline - 4 Webs -

Summary of the results (Minimum)

Section	--- Deadload ---- Moment	Ax.Frc	----- P.T. ------ Moment	Ax.Frc	--- Live load --- Moment	Ax.Frc
1 a	-3.85	0.44	0.00	0.00	-3.27	0.23
1 b	-7.41	0.98	0.00	0.00	-9.51	0.56
1 c	-12.28	1.82	0.00	0.00	-16.92	1.22
1 right	-13.64	2.07	0.00	0.00	-20.17	1.47
2 left	-4.14	3.16	0.00	0.00	-11.42	-0.56
2 a	-3.35	2.99	0.00	0.00	-10.32	-0.61
2 b	0.30	2.25	0.00	0.00	-2.82	-0.03
2 c	0.27	2.29	0.00	0.00	-1.80	1.87
2 right	-7.67	4.20	0.00	0.00	-18.28	-0.11
3 left	-7.70	4.20	0.00	0.00	-18.30	-0.12
3 a	-6.66	3.95	0.00	0.00	-16.78	-0.10
3 b	-0.91	2.56	0.00	0.00	-3.47	0.50
3 c	0.30	2.24	0.00	0.00	-1.11	0.89
3 right	-4.05	3.07	0.00	0.00	-11.40	-0.57
4 left	-13.26	2.02	0.00	0.00	-19.19	1.54
4 a	-11.91	1.77	0.00	0.00	-16.30	1.26
4 b	-7.11	0.94	0.00	0.00	-9.13	0.57
4 c	-3.62	0.41	0.00	0.00	-2.83	0.23
5 a	-0.45	-0.80	0.00	0.00	-1.80	1.08
5 b	0.93	1.31	0.00	0.00	-0.09	2.20
5 c	-1.52	1.10	0.00	0.00	-2.53	1.75
6 a	-2.19	0.89	0.00	0.00	-2.88	1.89
6 b	0.93	1.33	0.00	0.00	-0.09	2.20
6 c	-0.01	-0.34	0.00	0.00	-1.56	1.08
7 top	-9.51	-3.84	0.00	0.00	-21.16	-5.44
7 a	-8.59	-3.34	0.00	0.00	-18.45	-4.80
7 b	-5.37	-1.50	0.00	0.00	-9.55	-2.62
8 top	0.03	-3.68	0.00	0.00	-20.69	-4.57
8 a	0.02	-3.09	0.00	0.00	-17.91	-4.04
8 b	0.02	-0.89	0.00	0.00	-8.60	-2.18
9 top	9.21	-3.80	0.00	0.00	-10.37	-2.35
9 a	8.32	-3.31	0.00	0.00	-9.08	-2.07
9 b	5.22	-1.48	0.00	0.00	-4.79	-1.05

II_B_S4_EL.OUT 9/11/2009

VEH: S4 - SUPER LOAD BRUG(5.75.44) page 43
date 11/09/2009; time 13:23:34
Cline Avenue - Load Rating - Double Box Mainline - 4 Webs -

Summary of the results (Maximum)

Section	--- Deadload ----		----- P.T. ------		--- Live load ---	
	Moment	Ax.Frc	Moment	Ax.Frc	Moment	Ax.Frc
1 a	-3.85	0.44	0.00	0.00	0.52	0.05
1 b	-7.41	0.98	0.00	0.00	0.37	0.15
1 c	-12.28	1.82	0.00	0.00	0.00	0.23
1 right	-13.64	2.07	0.00	0.00	0.00	0.26
2 left	-4.14	3.16	0.00	0.00	3.35	2.08
2 a	-3.35	2.99	0.00	0.00	3.96	1.78
2 b	0.30	2.25	0.00	0.00	4.69	0.40
2 c	0.27	2.29	0.00	0.00	4.12	-0.53
2 right	-7.67	4.20	0.00	0.00	3.50	1.76
3 left	-7.70	4.20	0.00	0.00	3.49	1.76
3 a	-6.66	3.95	0.00	0.00	3.73	1.57
3 b	-0.91	2.56	0.00	0.00	3.59	0.10
3 c	0.30	2.24	0.00	0.00	4.12	-0.54
3 right	-4.05	3.07	0.00	0.00	3.35	2.08
4 left	-13.26	2.02	0.00	0.00	0.00	0.25
4 a	-11.91	1.77	0.00	0.00	0.00	0.22
4 b	-7.11	0.94	0.00	0.00	0.37	0.14
4 c	-3.62	0.41	0.00	0.00	0.51	0.05
5 a	-0.45	-0.80	0.00	0.00	2.27	-1.78
5 b	0.93	1.31	0.00	0.00	0.07	-0.42
5 c	-1.52	1.10	0.00	0.00	1.29	-0.20
6 a	-2.19	0.89	0.00	0.00	1.49	-0.38
6 b	0.93	1.33	0.00	0.00	0.05	-0.65
6 c	-0.01	-0.34	0.00	0.00	1.94	-1.38
7 top	-9.51	-3.84	0.00	0.00	7.23	-2.06
7 a	-8.59	-3.34	0.00	0.00	6.33	-1.81
7 b	-5.37	-1.50	0.00	0.00	3.44	-0.73
8 top	0.03	-3.68	0.00	0.00	15.16	-1.88
8 a	0.02	-3.09	0.00	0.00	13.11	-1.65
8 b	0.02	-0.89	0.00	0.00	6.27	-1.48
9 top	9.21	-3.80	0.00	0.00	14.64	-3.73
9 a	8.32	-3.31	0.00	0.00	12.75	-3.29
9 b	5.22	-1.48	0.00	0.00	6.58	-1.77

II_B_S4_EL.OUT 9/11/2009

VEH: S4 - SUPER LOAD BRUG(5.75.44) page 44
date 11/09/2009; time 13:23:34
Cline Avenue - Load Rating - Double Box Mainline - 4 Webs -

Summary of the results (Minimum)

Section	--- Deadload ----		----- P.T. ------		--- Live load ---	
	Moment	Ax.Frc	Moment	Ax.Frc	Moment	Ax.Frc
1 a	-3.85	0.44	0.00	0.00	-2.00	0.11
1 b	-7.41	0.98	0.00	0.00	-6.08	0.28
1 c	-12.28	1.82	0.00	0.00	-10.83	0.68
1 right	-13.64	2.07	0.00	0.00	-13.09	0.85
2 left	-4.14	3.16	0.00	0.00	-8.02	-0.44
2 a	-3.35	2.99	0.00	0.00	-7.25	-0.48
2 b	0.30	2.25	0.00	0.00	-2.25	-0.13
2 c	0.27	2.29	0.00	0.00	-1.23	1.43
2 right	-7.67	4.20	0.00	0.00	-13.38	-0.04
3 left	-7.70	4.20	0.00	0.00	-13.40	-0.04
3 a	-6.66	3.95	0.00	0.00	-12.31	-0.02
3 b	-0.91	2.56	0.00	0.00	-2.93	0.44
3 c	0.30	2.24	0.00	0.00	-0.83	0.61
3 right	-4.05	3.07	0.00	0.00	-8.00	-0.45
4 left	-13.26	2.02	0.00	0.00	-12.46	0.89
4 a	-11.91	1.77	0.00	0.00	-10.45	0.70
4 b	-7.11	0.94	0.00	0.00	-5.85	0.28
4 c	-3.62	0.41	0.00	0.00	-1.71	0.11
5 a	-0.45	-0.80	0.00	0.00	-1.39	0.85
5 b	0.93	1.31	0.00	0.00	-0.07	1.48
5 c	-1.52	1.10	0.00	0.00	-1.96	1.09
6 a	-2.19	0.89	0.00	0.00	-2.22	1.22
6 b	0.93	1.33	0.00	0.00	-0.07	1.48
6 c	-0.01	-0.34	0.00	0.00	-1.21	0.86
7 top	-9.51	-3.84	0.00	0.00	-15.03	-3.72
7 a	-8.59	-3.34	0.00	0.00	-13.09	-3.28
7 b	-5.37	-1.50	0.00	0.00	-6.77	-1.77
8 top	0.03	-3.68	0.00	0.00	-15.14	-1.88
8 a	0.02	-3.09	0.00	0.00	-13.08	-1.65
8 b	0.02	-0.89	0.00	0.00	-6.26	-1.48
9 top	9.21	-3.80	0.00	0.00	-7.22	-2.06
9 a	8.32	-3.31	0.00	0.00	-6.32	-1.81
9 b	5.22	-1.48	0.00	0.00	-3.44	-0.73

VEH: S5 - SUPERLOAD BRUG(5.75.44) page 43
date 11/09/2009; time 13:23:35
Cline Avenue - Load Rating - Double Box Mainline - 4 Webs -

Summary of the results (Maximum)

Section	--- Deadload ---- Moment	Ax.Frc	----- P.T. ------ Moment	Ax.Frc	--- Live load --- Moment	Ax.Frc
1 a	-3.85	0.44	0.00	0.00	0.81	0.14
1 b	-7.41	0.98	0.00	0.00	0.51	0.38
1 c	-12.28	1.82	0.00	0.00	0.04	0.28
1 right	-13.64	2.07	0.00	0.00	0.05	0.31
2 left	-4.14	3.16	0.00	0.00	3.70	2.82
2 a	-3.35	2.99	0.00	0.00	4.69	2.40
2 b	0.30	2.25	0.00	0.00	6.22	0.47
2 c	0.27	2.29	0.00	0.00	5.73	-0.79
2 right	-7.67	4.20	0.00	0.00	3.89	2.38
3 left	-7.70	4.20	0.00	0.00	3.87	2.38
3 a	-6.66	3.95	0.00	0.00	4.34	2.08
3 b	-0.91	2.56	0.00	0.00	4.83	0.03
3 c	0.30	2.24	0.00	0.00	5.73	-0.80
3 right	-4.05	3.07	0.00	0.00	3.71	2.82
4 left	-13.26	2.02	0.00	0.00	0.05	0.31
4 a	-11.91	1.77	0.00	0.00	0.04	0.27
4 b	-7.11	0.94	0.00	0.00	0.51	0.37
4 c	-3.62	0.41	0.00	0.00	0.80	0.13
5 a	-0.45	-0.80	0.00	0.00	2.90	-2.26
5 b	0.93	1.31	0.00	0.00	0.09	-0.53
5 c	-1.52	1.10	0.00	0.00	1.65	-0.31
6 a	-2.19	0.89	0.00	0.00	1.91	-0.56
6 b	0.93	1.33	0.00	0.00	0.06	-0.83
6 c	-0.01	-0.34	0.00	0.00	2.47	-1.70
7 top	-9.51	-3.84	0.00	0.00	9.88	-2.37
7 a	-8.59	-3.34	0.00	0.00	8.61	-2.08
7 b	-5.37	-1.50	0.00	0.00	4.49	-1.05
8 top	0.03	-3.68	0.00	0.00	19.81	-4.55
8 a	0.02	-3.09	0.00	0.00	17.09	-4.02
8 b	0.02	-0.89	0.00	0.00	8.12	-2.15
9 top	9.21	-3.80	0.00	0.00	19.29	-5.43
9 a	8.32	-3.31	0.00	0.00	16.74	-4.78
9 b	5.22	-1.48	0.00	0.00	8.54	-2.57

VEH: S5 - SUPERLOAD BRUG(5.75.44) page 44
date 11/09/2009; time 13:23:35
Cline Avenue - Load Rating - Double Box Mainline - 4 Webs -

Summary of the results (Minimum)

Section	--- Deadload ---- Moment	Ax.Frc	----- P.T. ------ Moment	Ax.Frc	--- Live load --- Moment	Ax.Frc
1 a	-3.85	0.44	0.00	0.00	-2.71	0.16
1 b	-7.41	0.98	0.00	0.00	-8.57	0.41
1 c	-12.28	1.82	0.00	0.00	-15.37	1.01
1 right	-13.64	2.07	0.00	0.00	-18.57	1.26
2 left	-4.14	3.16	0.00	0.00	-11.05	-0.59
2 a	-3.35	2.99	0.00	0.00	-10.01	-0.65
2 b	0.30	2.25	0.00	0.00	-2.81	-0.11
2 c	0.27	2.29	0.00	0.00	-1.58	1.80
2 right	-7.67	4.20	0.00	0.00	-17.82	-0.01
3 left	-7.70	4.20	0.00	0.00	-17.84	-0.01
3 a	-6.66	3.95	0.00	0.00	-16.39	0.00
3 b	-0.91	2.56	0.00	0.00	-3.67	0.54
3 c	0.30	2.24	0.00	0.00	-1.07	0.95
3 right	-4.05	3.07	0.00	0.00	-11.03	-0.60
4 left	-13.26	2.02	0.00	0.00	-17.70	1.34
4 a	-11.91	1.77	0.00	0.00	-14.84	1.06
4 b	-7.11	0.94	0.00	0.00	-8.26	0.42
4 c	-3.62	0.41	0.00	0.00	-2.32	0.15
5 a	-0.45	-0.80	0.00	0.00	-1.77	1.08
5 b	0.93	1.31	0.00	0.00	-0.08	2.02
5 c	-1.52	1.10	0.00	0.00	-2.49	1.36
6 a	-2.19	0.89	0.00	0.00	-2.83	1.51
6 b	0.93	1.33	0.00	0.00	-0.08	2.02
6 c	-0.01	-0.34	0.00	0.00	-1.54	1.09
7 top	-9.51	-3.84	0.00	0.00	-19.81	-5.41
7 a	-8.59	-3.34	0.00	0.00	-17.19	-4.77
7 b	-5.37	-1.50	0.00	0.00	-8.78	-2.57
8 top	0.03	-3.68	0.00	0.00	-19.77	-4.55
8 a	0.02	-3.09	0.00	0.00	-17.05	-4.02
8 b	0.02	-0.89	0.00	0.00	-8.10	-2.15
9 top	9.21	-3.80	0.00	0.00	-9.86	-2.36
9 a	8.32	-3.31	0.00	0.00	-8.60	-2.08
9 b	5.22	-1.48	0.00	0.00	-4.48	-1.05

4.5.4 Brug Input Striped Lanes

1II_B_SL_HL93_truck_EL.txt 9/11/2009

```
* start ; column 11-30 can be used to have your own text on the top of each page
*   5   10   15   20   25   30   35   40   45   50   55   60   65   70   75   80
*   V    V    V    V    V    V    V    V    V    V    V    V    V    V    V    V
00001  1 1     VEH: HL93- TRUCK - SINGLE VEHICLE
* code 1001
Cline Avenue - Striped Lanes - Double Box Mainline - 4 Webs - 55.625' Wide
* code 1002
    2         1
* code 1003
*   5   10   15   20   25   30   35   40   45   50   55   60   65   70   75   80
*   V    V    V    V    V    V    V    V    V    V    V    V    V    V    V    V
250.0      183.0    55.625    1.0       1.0       1.3
* code 1004
    1    0    2
* code 1005
   72    1
* code 1005a
* location traffic lanes
17.667
* maximum and minimum truck
15.417    43.917    10.000
* code 1007, linear loads
0.7350    0.441
54.890    0.441
* code 1201
    8    5    4    2    3
* code 1202 coordinates
 0.0000   0.0000
11.0000   0.0000
11.0000   -7.9375
27.9167   0.0000
27.9167   -7.9375
44.8333   0.0000
44.8333   -7.9375
55.6250   0.0000
* code 1203 - profile 1
    5    2    3    4
0.0000    0.7500
5.4167    0.7500
7.9167    1.2083
10.4167   1.6667
11.0000   1.6667
* code 1203 - profile 2
    7    2    3    4
0.0000    1.6667
0.5833    1.6667
5.5833    0.7500
8.4583    0.7500
11.3333   0.7500
16.3333   1.6667
16.9167   1.6667
* code 1203 - profile 3
    5    2    3    4
0.0000    1.6667
0.5833    1.6667
3.0833    1.2083
5.5833    0.7500
10.7917   0.7500
* code 1203 - profile 4
    7    2    4    5
0.0000    1.4583
0.5833    1.4583
1.5833    0.4583
8.4583    0.4583
15.3333   0.4583
16.3333   1.4583
16.9167   1.4583
* code 1203 - profile 5
    5    2    3    4
0.0000    1.1667
0.8334    1.1667
3.7709    1.1667
6.7084    1.1667
7.9375    1.1667
* code 1204 - assembling boxgirder
    1    2    1
    2    4    2
    4    6    2
    6    8    3
    3    5    4
    5    7    4
```

```
    2    3    5
    4    5    5
    6    7    5
* code 1205 control code
    1    2   13    1    1    0    4    3     1.0       1.0
* code 1206 wheels/axle
       0.0
       1.5
       6.0
       7.5 0.833
* code 1207 definition axles
0.0       0.1
14.0      0.4
28.0      0.4
* code 1208 - accuracy
0.00001   0.00001   0.00001   .00001    .00001
* code 1209 number sections
   33
   1A   1B   1C   1R   2L   2A   2B   2C   2R   3L   3A   3B   3C   3R
   4L   4A   4B   4C   5A   5B   5C   6A   6B   6C
   7L   7A   7B   8L   8A   8B   9L   9A   9B
* code 1210 - density conrete
0.156
* code 1211 - extra forces selfweight

* code 1212 - surcharge
1.3906
* code 1213 - Prestressing Layout - NONE
```

1II_B_SL_HL93_tandem_EL.txt 9/11/2009

```
* start ; column 11-30 can be used to have your own text on the top of each page
*   5   10   15   20   25   30   35   40   45   50   55   60   65   70   75   80
*   V    V    V    V    V    V    V    V    V    V    V    V    V    V    V    V
00001  1 1     VEH: HL93- TANDEM - SINGLE VEHICLE
* code 1001
Cline Avenue - Striped Lanes - Double Box Mainline - 4 Webs - 55.625' Wide
* code 1002
    2         1
* code 1003
*   5   10   15   20   25   30   35   40   45   50   55   60   65   70   75   80
*   V    V    V    V    V    V    V    V    V    V    V    V    V    V    V    V
250.0      183.0    55.625    1.0       1.0       1.3
* code 1004
    1    0    2
* code 1005
   50    1
* code 1005a
* location traffic lanes
17.667
* maximum and minimum truck
15.417    43.917    10.000
* code 1007, linear loads
0.7350    0.441
54.890    0.441
* code 1201
    8    5    4    2    3
* code 1202 coordinates
 0.0000   0.0000
11.0000   0.0000
11.0000   -7.9375
27.9167   0.0000
27.9167   -7.9375
44.8333   0.0000
44.8333   -7.9375
55.6250   0.0000
* code 1203 - profile 1
    5    2    3    4
0.0000    0.7500
5.4167    0.7500
7.9167    1.2083
10.4167   1.6667
11.0000   1.6667
* code 1203 - profile 2
    7    2    3    4
0.0000    1.6667
0.5833    1.6667
5.5833    0.7500
8.4583    0.7500
11.3333   0.7500
16.3333   1.6667
16.9167   1.6667
* code 1203 - profile 3
    5    2    3    4
0.0000    1.6667
0.5833    1.6667
3.0833    1.2083
5.5833    0.7500
10.7917   0.7500
* code 1203 - profile 4
    7    2    4    5
0.0000    1.4583
0.5833    1.4583
1.5833    0.4583
8.4583    0.4583
15.3333   0.4583
16.3333   1.4583
16.9167   1.4583
* code 1203 - profile 5
    5    2    3    4
0.0000    1.1667
0.8334    1.1667
3.7709    1.1667
6.7084    1.1667
7.9375    1.1667
* code 1204 - assembling boxgirder
    1    2    1
    2    4    2
    4    6    2
    6    8    3
    3    5    4
    5    7    4
```

```
    2    3    5
    4    5    5
    6    7    5
* code 1205 control code
    1    2   13    1    1    0    4    2     1.0       1.0
* code 1206 wheels/axle
       0.0
       1.5
       6.0
       7.5 0.833
* code 1207 definition axles
0.0       0.5
4.0       0.5
* code 1208 - accuracy
0.00001   0.00001   0.00001   .00001    .00001
* code 1209 number sections
   33
   1A   1B   1C   1R   2L   2A   2B   2C   2R   3L   3A   3B   3C   3R
   4L   4A   4B   4C   5A   5B   5C   6A   6B   6C
   7L   7A   7B   8L   8A   8B   9L   9A   9B
* code 1210 - density conrete
0.156
* code 1211 - extra forces selfweight

* code 1212 - surcharge
1.3906
* code 1213 - Prestressing Layout - NONE
```

```
* start ; column 11-30 can be used to have your own text on the top of each page
*   5   10   15   20   25   30   35   40   45   50   55   60   65   70   75   80
*   V    V    V    V    V    V    V    V    V    V    V    V    V    V    V    V
00001  1 1     VEH: HL93- TRUCK
* code 1001
Cline Avenue - Striped Lanes - Double Box Mainline - 4 Webs - 55.625' Wide
* code 1002
    2         1
* code 1003
*   5   10   15   20   25   30   35   40   45   50   55   60   65   70   75   80
*   V    V    V    V    V    V    V    V    V    V    V    V    V    V    V    V
250.0      183.0    55.625    1.0       1.0       1.3
* code 1004
    2    0    2
* code 1005
   72
* code 1005a
* location traffic lanes
17.667    29.667
* maximum and minimum truck
15.417    43.917    10.000
* code 1007, linear loads
0.7350    0.441
54.890    0.441
* code 1201
    8    5    4    2    3
* code 1202 coordinates
 0.0000   0.0000
11.0000   0.0000
11.0000   -7.9375
27.9167   0.0000
27.9167   -7.9375
44.8333   0.0000
44.8333   -7.9375
55.6250   0.0000
* code 1203 - profile 1
    5    2    3    4
0.0000    0.7500
5.4167    0.7500
7.9167    1.2083
10.4167   1.6667
11.0000   1.6667
* code 1203 - profile 2
    7    2    3    4
0.0000    1.6667
0.5833    1.6667
5.5833    0.7500
8.4583    0.7500
11.3333   0.7500
16.3333   1.6667
16.9167   1.6667
* code 1203 - profile 3
    5    2    3    4
0.0000    1.6667
0.5833    1.6667
3.0833    1.2083
5.5833    0.7500
10.7917   0.7500
* code 1203 - profile 4
    7    2    4    5
0.0000    1.4583
0.5833    1.4583
1.5833    0.4583
8.4583    0.4583
15.3333   0.4583
16.3333   1.4583
16.9167   1.4583
* code 1203 - profile 5
    5    2    3    4
0.0000    1.1667
0.8334    1.1667
3.7709    1.1667
6.7084    1.1667
7.9375    1.1667
* code 1204 - assembling boxgirder
    1    2    1
    2    4    2
    4    6    2
    6    8    3
    3    5    4
    5    7    4
```

```
    2    3    5
    4    5    5
    6    7    5
* code 1205 control code
    1    2   13    1    1    0    4    3     1.0       1.0
* code 1206 wheels/axle
       0.0
       1.5
       6.0
       7.5 0.833
* code 1207 definition axles
0.0       0.1
14.0      0.4
28.0      0.4
* code 1208 - accuracy
0.00001   0.00001   0.00001   .00001    .00001
* code 1209 number sections
   33
   1A   1B   1C   1R   2L   2A   2B   2C   2R   3L   3A   3B   3C   3R
   4L   4A   4B   4C   5A   5B   5C   6A   6B   6C
   7L   7A   7B   8L   8A   8B   9L   9A   9B
* code 1210 - density conrete
0.156
* code 1211 - extra forces selfweight

* code 1212 - surcharge
1.3906
* code 1213 - Prestressing Layout - NONE
```

```
* start ; column 11-30 can be used to have your own text on the top of each page
*   5   10   15   20   25   30   35   40   45   50   55   60   65   70   75   80
*   V    V    V    V    V    V    V    V    V    V    V    V    V    V    V    V
00001  1 1     VEH: HL93- TANDEM
* code 1001
Cline Avenue - Load Rating - Double Box Mainline - 4 Webs - 55.625' Wide
* code 1002
    2         1
* code 1003
*   5   10   15   20   25   30   35   40   45   50   55   60   65   70   75   80
*   V    V    V    V    V    V    V    V    V    V    V    V    V    V    V    V
250.0      183.0    55.625    1.0       1.0       1.3
* code 1004
    2    0    2
* code 1005
   50
* code 1005a
* location traffic lanes
17.667    29.667
* maximum and minimum truck
15.417    43.917    10.000
* code 1007, linear loads
0.7350    0.441
54.890    0.441
* code 1201
    8    5    4    2    3
* code 1202 coordinates
 0.0000   0.0000
11.0000   0.0000
11.0000   -7.9375
27.9167   0.0000
27.9167   -7.9375
44.8333   0.0000
44.8333   -7.9375
55.6250   0.0000
* code 1203 - profile 1
    5    2    3    4
0.0000    0.7500
5.4167    0.7500
7.9167    1.2083
10.4167   1.6667
11.0000   1.6667
* code 1203 - profile 2
    7    2    3    4
0.0000    1.6667
0.5833    1.6667
5.5833    0.7500
8.4583    0.7500
11.3333   0.7500
16.3333   1.6667
16.9167   1.6667
* code 1203 - profile 3
    5    2    3    4
0.0000    1.6667
0.5833    1.6667
3.0833    1.2083
5.5833    0.7500
10.7917   0.7500
* code 1203 - profile 4
    7    2    4    5
0.0000    1.4583
0.5833    1.4583
1.5833    0.4583
8.4583    0.4583
15.3333   0.4583
16.3333   1.4583
16.9167   1.4583
* code 1203 - profile 5
    5    2    3    4
0.0000    1.1667
0.8334    1.1667
3.7709    1.1667
6.7084    1.1667
7.9375    1.1667
* code 1204 - assembling boxgirder
    1    2    1
    2    4    2
    4    6    2
    6    8    3
    3    5    4
    5    7    4
```

```
    2    3    5
    4    5    5
    6    7    5
* code 1205 control code
    1    2   13    1    1    0    4    2     1.0       1.0
* code 1206 wheels/axle
       0.0
       1.5
       6.0
       7.5 0.833
* code 1207 definition axles
0.0       0.5
4.0       0.5
* code 1208 - accuracy
0.00001   0.00001   0.00001   .00001    .00001
* code 1209 number sections
   33
   1A   1B   1C   1R   2L   2A   2B   2C   2R   3L   3A   3B   3C   3R
   4L   4A   4B   4C   5A   5B   5C   6A   6B   6C
   7L   7A   7B   8L   8A   8B   9L   9A   9B
* code 1210 - density conrete
0.156
* code 1211 - extra forces selfweight

* code 1212 - surcharge
1.3906
* code 1213 - Prestressing Layout - NONE
```

4.5.5 Brug Output Striped Lanes (Summary)

1II_B_SL_HL93_truck_EL.OUT 9/11/2009

VEH: HL93- TRUCK - S BRUG(5.75.44) page 43
date 11/09/2009; time 14:42:16
Cline Avenue - Striped Lanes - Double Box Mainline - 4 Webs

Summary of the results (Maximum)

Section	--- Deadload ----		----- P.T. ------		--- Live load ---	
	Moment	Ax.Frc	Moment	Ax.Frc	Moment	Ax.Frc
1 a	-3.85	0.44	0.00	0.00	0.01	0.02
1 b	-7.41	0.98	0.00	0.00	0.02	0.04
1 c	-12.28	1.82	0.00	0.00	0.05	0.08
1 right	-13.64	2.07	0.00	0.00	0.06	0.09
2 left	-4.14	3.16	0.00	0.00	-0.98	-0.09
2 a	-3.35	2.99	0.00	0.00	-0.92	-0.08
2 b	0.30	2.25	0.00	0.00	2.88	-0.29
2 c	0.27	2.29	0.00	0.00	4.03	-0.28
2 right	-7.67	4.20	0.00	0.00	0.29	0.49
3 left	-7.70	4.20	0.00	0.00	-0.11	1.38
3 a	-6.66	3.95	0.00	0.00	0.72	1.02
3 b	-0.91	2.56	0.00	0.00	3.40	0.09
3 c	0.30	2.24	0.00	0.00	4.03	-0.28
3 right	-4.05	3.07	0.00	0.00	-0.96	-0.10
4 left	-13.26	2.02	0.00	0.00	0.05	0.09
4 a	-11.91	1.77	0.00	0.00	0.04	0.07
4 b	-7.11	0.94	0.00	0.00	0.85	0.22
4 c	-3.62	0.41	0.00	0.00	0.09	0.08
5 a	-0.45	-0.80	0.00	0.00	0.38	0.29
5 b	0.93	1.31	0.00	0.00	0.02	0.15
5 c	-1.52	1.10	0.00	0.00	0.39	-0.06
6 a	-2.19	0.89	0.00	0.00	0.46	-0.12
6 b	0.93	1.33	0.00	0.00	0.02	0.19
6 c	-0.01	-0.34	0.00	0.00	0.53	-0.10
7 top	-9.51	-3.84	0.00	0.00	4.05	-1.68
7 a	-8.59	-3.34	0.00	0.00	3.46	-1.46
7 b	-5.37	-1.50	0.00	0.00	1.85	-0.71
8 top	0.03	-3.68	0.00	0.00	6.32	-1.85
8 a	0.02	-3.09	0.00	0.00	5.39	-1.62
8 b	0.02	-0.89	0.00	0.00	2.59	-0.84
9 top	9.21	-3.80	0.00	0.00	2.69	-6.53
9 a	8.32	-3.31	0.00	0.00	2.27	-5.53
9 b	5.22	-1.48	0.00	0.00	1.01	-2.48

1II_B_SL_HL93_truck_EL.OUT 9/11/2009

VEH: HL93- TRUCK - S BRUG(5.75.44) page 44
date 11/09/2009; time 14:42:16
Cline Avenue - Striped Lanes - Double Box Mainline - 4 Webs

Summary of the results (Minimum)

Section	--- Deadload ----		----- P.T. ------		--- Live load ---	
	Moment	Ax.Frc	Moment	Ax.Frc	Moment	Ax.Frc
1 a	-3.85	0.44	0.00	0.00	-0.09	0.09
1 b	-7.41	0.98	0.00	0.00	-0.26	0.21
1 c	-12.28	1.82	0.00	0.00	-1.17	0.52
1 right	-13.64	2.07	0.00	0.00	-1.70	0.65
2 left	-4.14	3.16	0.00	0.00	-5.78	-0.03
2 a	-3.35	2.99	0.00	0.00	-5.09	-0.10
2 b	0.30	2.25	0.00	0.00	-0.87	-0.18
2 c	0.27	2.29	0.00	0.00	-0.36	0.13
2 right	-7.67	4.20	0.00	0.00	-7.67	-0.10
3 left	-7.70	4.20	0.00	0.00	-7.68	-0.10
3 a	-6.66	3.95	0.00	0.00	-6.87	-0.17
3 b	-0.91	2.56	0.00	0.00	-1.50	-0.27
3 c	0.30	2.24	0.00	0.00	-0.36	0.13
3 right	-4.05	3.07	0.00	0.00	-5.78	-0.04
4 left	-13.26	2.02	0.00	0.00	-5.18	0.95
4 a	-11.91	1.77	0.00	0.00	-3.10	0.68
4 b	-7.11	0.94	0.00	0.00	-0.26	0.21
4 c	-3.62	0.41	0.00	0.00	-0.09	0.08
5 a	-0.45	-0.80	0.00	0.00	-0.39	0.19
5 b	0.93	1.31	0.00	0.00	-0.04	0.69
5 c	-1.52	1.10	0.00	0.00	-0.41	0.85
6 a	-2.19	0.89	0.00	0.00	-0.62	0.74
6 b	0.93	1.33	0.00	0.00	-0.04	0.69
6 c	-0.01	-0.34	0.00	0.00	-0.34	0.19
7 top	-9.51	-3.84	0.00	0.00	1.00	-0.09
7 a	-8.59	-3.34	0.00	0.00	0.86	-0.08
7 b	-5.37	-1.50	0.00	0.00	0.36	-0.03
8 top	0.03	-3.68	0.00	0.00	-6.31	-1.85
8 a	0.02	-3.09	0.00	0.00	-5.38	-1.62
8 b	0.02	-0.89	0.00	0.00	-2.59	-0.84
9 top	9.21	-3.80	0.00	0.00	-4.05	-1.68
9 a	8.32	-3.31	0.00	0.00	-3.46	-1.46
9 b	5.22	-1.48	0.00	0.00	-1.85	-0.71

1II_B_SL_HL93_tandem_EL.OUT 9/11/2009

VEH: HL93- TANDEM - BRUG(5.75.44) page 43
date 11/09/2009; time 14:42:16
Cline Avenue - Striped Lanes - Double Box Mainline - 4 Webs

Summary of the results (Maximum)

Section	--- Deadload ----		----- P.T. ------		--- Live load ---	
	Moment	Ax.Frc	Moment	Ax.Frc	Moment	Ax.Frc
1 a	-3.85	0.44	0.00	0.00	0.01	0.01
1 b	-7.41	0.98	0.00	0.00	0.03	0.02
1 c	-12.28	1.82	0.00	0.00	0.10	0.05
1 right	-13.64	2.07	0.00	0.00	0.13	0.05
2 left	-4.14	3.16	0.00	0.00	-0.65	-0.07
2 a	-3.35	2.99	0.00	0.00	-0.61	-0.07
2 b	0.30	2.25	0.00	0.00	2.60	-0.31
2 c	0.27	2.29	0.00	0.00	3.82	-0.30
2 right	-7.67	4.20	0.00	0.00	-0.07	0.36
3 left	-7.70	4.20	0.00	0.00	-1.05	0.55
3 a	-6.66	3.95	0.00	0.00	-0.31	1.14
3 b	-0.91	2.56	0.00	0.00	3.12	0.07
3 c	0.30	2.24	0.00	0.00	3.82	-0.30
3 right	-4.05	3.07	0.00	0.00	-0.56	-0.08
4 left	-13.26	2.02	0.00	0.00	0.09	0.04
4 a	-11.91	1.77	0.00	0.00	0.07	0.04
4 b	-7.11	0.94	0.00	0.00	0.52	0.30
4 c	-3.62	0.41	0.00	0.00	0.12	0.10
5 a	-0.45	-0.80	0.00	0.00	0.23	0.44
5 b	0.93	1.31	0.00	0.00	0.02	0.10
5 c	-1.52	1.10	0.00	0.00	0.30	-0.35
6 a	-2.19	0.89	0.00	0.00	0.40	-0.37
6 b	0.93	1.33	0.00	0.00	0.01	0.15
6 c	-0.01	-0.34	0.00	0.00	0.38	0.08
7 top	-9.51	-3.84	0.00	0.00	4.54	-2.53
7 a	-8.59	-3.34	0.00	0.00	3.53	-1.73
7 b	-5.37	-1.50	0.00	0.00	1.77	-0.88
8 top	0.03	-3.68	0.00	0.00	6.19	-2.72
8 a	0.02	-3.09	0.00	0.00	5.20	-2.42
8 b	0.02	-0.89	0.00	0.00	2.26	-1.04
9 top	9.21	-3.80	0.00	0.00	1.80	-5.95
9 a	8.32	-3.31	0.00	0.00	1.55	-5.22
9 b	5.22	-1.48	0.00	0.00	0.69	-2.66

1II_B_SL_HL93_tandem_EL.OUT 9/11/2009

VEH: HL93- TANDEM - BRUG(5.75.44) page 44
date 11/09/2009; time 14:42:16
Cline Avenue - Striped Lanes - Double Box Mainline - 4 Webs

Summary of the results (Minimum)

Section	--- Deadload ----		----- P.T. ------		--- Live load ---	
	Moment	Ax.Frc	Moment	Ax.Frc	Moment	Ax.Frc
1 a	-3.85	0.44	0.00	0.00	-0.17	0.11
1 b	-7.41	0.98	0.00	0.00	-0.48	0.26
1 c	-12.28	1.82	0.00	0.00	-1.83	0.61
1 right	-13.64	2.07	0.00	0.00	-2.49	0.74
2 left	-4.14	3.16	0.00	0.00	-6.95	0.15
2 a	-3.35	2.99	0.00	0.00	-6.09	-0.06
2 b	0.30	2.25	0.00	0.00	-0.85	-0.20
2 c	0.27	2.29	0.00	0.00	-0.31	0.11
2 right	-7.67	4.20	0.00	0.00	-8.37	0.11
3 left	-7.70	4.20	0.00	0.00	-8.38	0.11
3 a	-6.66	3.95	0.00	0.00	-7.42	-0.11
3 b	-0.91	2.56	0.00	0.00	-1.30	-0.28
3 c	0.30	2.24	0.00	0.00	-0.31	0.11
3 right	-4.05	3.07	0.00	0.00	-6.95	0.14
4 left	-13.26	2.02	0.00	0.00	-5.54	1.01
4 a	-11.91	1.77	0.00	0.00	-3.63	0.80
4 b	-7.11	0.94	0.00	0.00	-0.48	0.26
4 c	-3.62	0.41	0.00	0.00	-0.17	0.10
5 a	-0.45	-0.80	0.00	0.00	-0.29	0.12
5 b	0.93	1.31	0.00	0.00	-0.03	0.68
5 c	-1.52	1.10	0.00	0.00	-0.30	0.77
6 a	-2.19	0.89	0.00	0.00	-0.46	0.66
6 b	0.93	1.33	0.00	0.00	-0.03	0.68
6 c	-0.01	-0.34	0.00	0.00	-0.25	0.12
7 top	-9.51	-3.84	0.00	0.00	0.68	-0.05
7 a	-8.59	-3.34	0.00	0.00	0.58	-0.04
7 b	-5.37	-1.50	0.00	0.00	0.24	-0.02
8 top	0.03	-3.68	0.00	0.00	-6.19	-2.72
8 a	0.02	-3.09	0.00	0.00	-5.19	-2.42
8 b	0.02	-0.89	0.00	0.00	-2.26	-1.04
9 top	9.21	-3.80	0.00	0.00	-4.54	-2.53
9 a	8.32	-3.31	0.00	0.00	-3.53	-1.73
9 b	5.22	-1.48	0.00	0.00	-1.77	-0.88

VEH: HL93- TRUCK BRUG(5.75.44) page 43
date 11/09/2009; time 14:42:23
Cline Avenue - Striped Lanes - Double Box Mainline - 4 Webs

Summary of the results (Maximum)

Section	--- Deadload ---- Moment	Ax.Frc	----- P.T. ------ Moment	Ax.Frc	--- Live load --- Moment	Ax.Frc
1 a	-3.85	0.44	0.00	0.00	0.01	0.04
1 b	-7.41	0.98	0.00	0.00	0.02	0.09
1 c	-12.28	1.82	0.00	0.00	0.06	0.18
1 right	-13.64	2.07	0.00	0.00	0.07	0.21
2 left	-4.14	3.16	0.00	0.00	-0.98	-0.09
2 a	-3.35	2.99	0.00	0.00	-0.92	-0.08
2 b	0.30	2.25	0.00	0.00	2.88	-0.29
2 c	0.27	2.29	0.00	0.00	4.82	-0.30
2 right	-7.67	4.20	0.00	0.00	0.29	0.49
3 left	-7.70	4.20	0.00	0.00	-0.11	1.38
3 a	-6.66	3.95	0.00	0.00	0.72	1.02
3 b	-0.91	2.56	0.00	0.00	3.40	0.09
3 c	0.30	2.24	0.00	0.00	4.82	-0.31
3 right	-4.05	3.07	0.00	0.00	-0.96	-0.10
4 left	-13.26	2.02	0.00	0.00	0.06	0.09
4 a	-11.91	1.77	0.00	0.00	0.05	0.08
4 b	-7.11	0.94	0.00	0.00	0.85	0.22
4 c	-3.62	0.41	0.00	0.00	0.09	0.08
5 a	-0.45	-0.80	0.00	0.00	0.38	0.29
5 b	0.93	1.31	0.00	0.00	0.03	0.30
5 c	-1.52	1.10	0.00	0.00	0.69	-0.20
6 a	-2.19	0.89	0.00	0.00	0.80	-0.43
6 b	0.93	1.33	0.00	0.00	0.02	0.30
6 c	-0.01	-0.34	0.00	0.00	0.53	-0.10
7 top	-9.51	-3.84	0.00	0.00	5.65	-4.49
7 a	-8.59	-3.34	0.00	0.00	4.75	-3.83
7 b	-5.37	-1.50	0.00	0.00	2.49	-1.75
8 top	0.03	-3.68	0.00	0.00	10.13	-4.91
8 a	0.02	-3.09	0.00	0.00	8.56	-4.21
8 b	0.02	-0.89	0.00	0.00	4.00	-2.02
9 top	9.21	-3.80	0.00	0.00	2.69	-6.53
9 a	8.32	-3.31	0.00	0.00	2.27	-5.53
9 b	5.22	-1.48	0.00	0.00	1.01	-2.48

VEH: HL93- TRUCK BRUG(5.75.44) page 44
date 11/09/2009; time 14:42:23
Cline Avenue - Striped Lanes - Double Box Mainline - 4 Webs

Summary of the results (Minimum)

Section	--- Deadload ---- Moment	Ax.Frc	----- P.T. ------ Moment	Ax.Frc	--- Live load --- Moment	Ax.Frc
1 a	-3.85	0.44	0.00	0.00	-0.11	0.14
1 b	-7.41	0.98	0.00	0.00	-0.32	0.35
1 c	-12.28	1.82	0.00	0.00	-1.43	0.92
1 right	-13.64	2.07	0.00	0.00	-2.06	1.20
2 left	-4.14	3.16	0.00	0.00	-7.70	0.01
2 a	-3.35	2.99	0.00	0.00	-6.50	-0.18
2 b	0.30	2.25	0.00	0.00	-1.40	-0.12
2 c	0.27	2.29	0.00	0.00	-0.53	0.27
2 right	-7.67	4.20	0.00	0.00	-10.14	0.77
3 left	-7.70	4.20	0.00	0.00	-10.76	0.10
3 a	-6.66	3.95	0.00	0.00	-8.56	0.47
3 b	-0.91	2.56	0.00	0.00	-1.50	-0.27
3 c	0.30	2.24	0.00	0.00	-0.38	0.26
3 right	-4.05	3.07	0.00	0.00	-7.69	0.00
4 left	-13.26	2.02	0.00	0.00	-6.32	1.37
4 a	-11.91	1.77	0.00	0.00	-3.91	1.03
4 b	-7.11	0.94	0.00	0.00	-0.29	0.28
4 c	-3.62	0.41	0.00	0.00	-0.11	0.14
5 a	-0.45	-0.80	0.00	0.00	-0.72	0.39
5 b	0.93	1.31	0.00	0.00	-0.05	1.19
5 c	-1.52	1.10	0.00	0.00	-0.41	0.85
6 a	-2.19	0.89	0.00	0.00	-0.72	1.13
6 b	0.93	1.33	0.00	0.00	-0.05	1.18
6 c	-0.01	-0.34	0.00	0.00	-0.61	0.43
7 top	-9.51	-3.84	0.00	0.00	1.00	-0.09
7 a	-8.59	-3.34	0.00	0.00	0.86	-0.08
7 b	-5.37	-1.50	0.00	0.00	0.36	-0.03
8 top	0.03	-3.68	0.00	0.00	-8.70	-7.64
8 a	0.02	-3.09	0.00	0.00	-7.40	-6.51
8 b	0.02	-0.89	0.00	0.00	-3.53	-3.05
9 top	9.21	-3.80	0.00	0.00	-5.65	-4.49
9 a	8.32	-3.31	0.00	0.00	-4.75	-3.83
9 b	5.22	-1.48	0.00	0.00	-2.49	-1.75

II_B_SL_HL93_tandem_EL.OUT 9/11/2009

VEH: HL93- TANDEM BRUG(5.75.44) page 43
date 11/09/2009; time 14:42:23
Cline Avenue - Load Rating - Double Box Mainline - 4 Webs -

Summary of the results (Maximum)

Section	--- Deadload ----		----- P.T. ------		--- Live load ---	
	Moment	Ax.Frc	Moment	Ax.Frc	Moment	Ax.Frc
1 a	-3.85	0.44	0.00	0.00	0.01	0.02
1 b	-7.41	0.98	0.00	0.00	0.03	0.05
1 c	-12.28	1.82	0.00	0.00	0.11	0.10
1 right	-13.64	2.07	0.00	0.00	0.15	0.11
2 left	-4.14	3.16	0.00	0.00	-0.65	-0.07
2 a	-3.35	2.99	0.00	0.00	-0.61	-0.07
2 b	0.30	2.25	0.00	0.00	2.60	-0.31
2 c	0.27	2.29	0.00	0.00	4.63	-0.36
2 right	-7.67	4.20	0.00	0.00	-0.07	0.36
3 left	-7.70	4.20	0.00	0.00	-1.05	0.55
3 a	-6.66	3.95	0.00	0.00	-0.31	1.14
3 b	-0.91	2.56	0.00	0.00	3.12	0.07
3 c	0.30	2.24	0.00	0.00	4.63	-0.37
3 right	-4.05	3.07	0.00	0.00	-0.56	-0.08
4 left	-13.26	2.02	0.00	0.00	0.13	0.05
4 a	-11.91	1.77	0.00	0.00	0.10	0.05
4 b	-7.11	0.94	0.00	0.00	0.52	0.30
4 c	-3.62	0.41	0.00	0.00	0.12	0.10
5 a	-0.45	-0.80	0.00	0.00	0.23	0.44
5 b	0.93	1.31	0.00	0.00	0.02	0.21
5 c	-1.52	1.10	0.00	0.00	0.52	-0.27
6 a	-2.19	0.89	0.00	0.00	0.64	-0.57
6 b	0.93	1.33	0.00	0.00	0.02	0.20
6 c	-0.01	-0.34	0.00	0.00	0.38	0.08
7 top	-9.51	-3.84	0.00	0.00	5.89	-3.46
7 a	-8.59	-3.34	0.00	0.00	4.88	-3.89
7 b	-5.37	-1.50	0.00	0.00	2.42	-1.96
8 top	0.03	-3.68	0.00	0.00	9.01	-4.78
8 a	0.02	-3.09	0.00	0.00	7.57	-4.24
8 b	0.02	-0.89	0.00	0.00	3.44	-2.28
9 top	9.21	-3.80	0.00	0.00	1.80	-5.95
9 a	8.32	-3.31	0.00	0.00	1.55	-5.22
9 b	5.22	-1.48	0.00	0.00	0.69	-2.66

II_B_SL_HL93_tandem_EL.OUT 9/11/2009

VEH: HL93- TANDEM BRUG(5.75.44) page 44
date 11/09/2009; time 14:42:23
Cline Avenue - Load Rating - Double Box Mainline - 4 Webs -

Summary of the results (Minimum)

Section	--- Deadload ----		----- P.T. ------		--- Live load ---	
	Moment	Ax.Frc	Moment	Ax.Frc	Moment	Ax.Frc
1 a	-3.85	0.44	0.00	0.00	-0.20	0.16
1 b	-7.41	0.98	0.00	0.00	-0.58	0.42
1 c	-12.28	1.82	0.00	0.00	-2.19	1.00
1 right	-13.64	2.07	0.00	0.00	-2.97	1.22
2 left	-4.14	3.16	0.00	0.00	-8.57	0.06
2 a	-3.35	2.99	0.00	0.00	-7.37	-0.04
2 b	0.30	2.25	0.00	0.00	-1.18	-0.22
2 c	0.27	2.29	0.00	0.00	-0.44	0.21
2 right	-7.67	4.20	0.00	0.00	-11.50	1.15
3 left	-7.70	4.20	0.00	0.00	-11.50	1.15
3 a	-6.66	3.95	0.00	0.00	-9.69	0.54
3 b	-0.91	2.56	0.00	0.00	-1.30	-0.28
3 c	0.30	2.24	0.00	0.00	-0.32	0.21
3 right	-4.05	3.07	0.00	0.00	-9.68	1.25
4 left	-13.26	2.02	0.00	0.00	-7.39	1.49
4 a	-11.91	1.77	0.00	0.00	-4.99	1.20
4 b	-7.11	0.94	0.00	0.00	-0.54	0.44
4 c	-3.62	0.41	0.00	0.00	-0.19	0.17
5 a	-0.45	-0.80	0.00	0.00	-0.52	0.27
5 b	0.93	1.31	0.00	0.00	-0.04	1.21
5 c	-1.52	1.10	0.00	0.00	-0.30	0.77
6 a	-2.19	0.89	0.00	0.00	-0.57	0.94
6 b	0.93	1.33	0.00	0.00	-0.04	1.19
6 c	-0.01	-0.34	0.00	0.00	-0.45	0.30
7 top	-9.51	-3.84	0.00	0.00	0.68	-0.05
7 a	-8.59	-3.34	0.00	0.00	0.58	-0.04
7 b	-5.37	-1.50	0.00	0.00	0.24	-0.02
8 top	0.03	-3.68	0.00	0.00	-8.05	-7.11
8 a	0.02	-3.09	0.00	0.00	-6.77	-6.29
8 b	0.02	-0.89	0.00	0.00	-3.11	-3.38
9 top	9.21	-3.80	0.00	0.00	-5.89	-3.46
9 a	8.32	-3.31	0.00	0.00	-4.88	-3.89
9 b	5.22	-1.48	0.00	0.00	-2.42	-1.96

4.6 3D Analysis Section IIIA

CASE III A TWO ADJACENT BOXES (4 webs)

worstcase: combine

Pier 11 - 12 WBL Segment 2/ expansion joint / Segment 3.

width = 64.125.

with

Smaller cross section near midspan

@ joint (RM 311)

Tango 140.

t slab = 5.50 in.

H = 9.016 ft.

The Bridge cross section transitions from a two box-three web section (width ≈ 55.625'), section IIB, to a two box - four web section. Once the bridge width is 64.125 feet (Section III A) the section remains constant. Thus, section III A applies to double box - four web section which width is equal or smaller than 64.125 feet.

As the bridge transitions to a 3 box - 5 web section (one single box with an adjacent double box) the two box section will increase in width. Such a case is analyzed on section III B.

Near Pier 12 of W.B.L, within the constant width section, the exterior box shifts its position, resulting on a smaller cantilever (6.27' at Pier 12) and a larger intermediate span between boxes. This span arrangement, was combined with the section properties at midspan, to capture the worst transverse live load case ✓

4.6/2

Drawn
01/23/09

URS

Page 4.6/3 of

Job CLINE AVENUE LOAD RATING | Project No. | Sheet of

Description TRANSVERSE ANALYSIS | Computed by PT | Date 1/21/09

Checked by RJM | Date 01/23/09

Reference

(Section IIIA and IIIB).

Notes on Cross Section

(Discussed with RJBA on 1/21/09).

① Section 3B and 3C (top slab, exterior section between webs) were assumed to have a cross section thickness equal to 0.75' with one #6 bar at 12 inches. Similar to the profile of the top slab right above the webs.

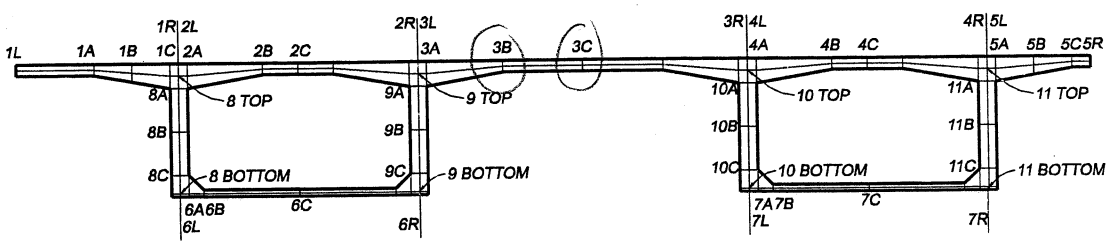

② The profile of the box at the pier diaphragms, (as an example pier 12' is consistent with this assumption, (see sheet 631).

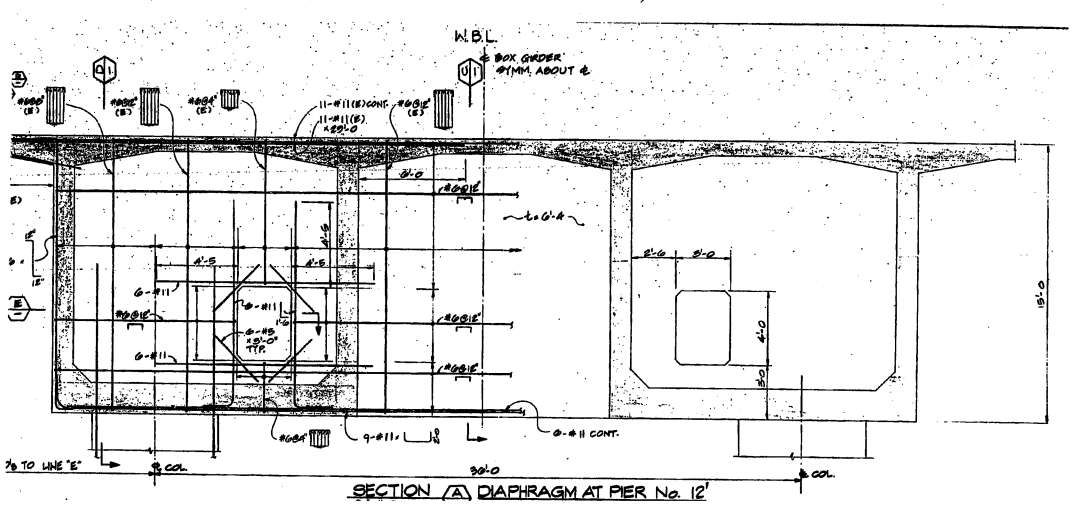

from sheet 631.

URS

Page 4.6/4 of

Job CLINE AVENUE LOAD RATING | Project No. | Sheet of

Description TRANSVERSE ANALYSIS | Computed by PT | Date 1/21/09

Checked by [illegible] | Date 01/23/09

Reference

(3) Assumption (1) and (2) described before were required due to lack of information on the drawings

The reinforcement layout for boxes on segment 3 and segment 4 (see sheet 521, 520, 530, 531 and 532) show a variable thickness for the top slab between the boxes, which will result on a thickness larger than 0.75'. The reinforcement layout drawings show one #6 bar on section 3C only. However, there is not a drawing that shows the top slab profile between two single boxes for spans larger that 10 feet. Drawing 532 is for a single and double box.

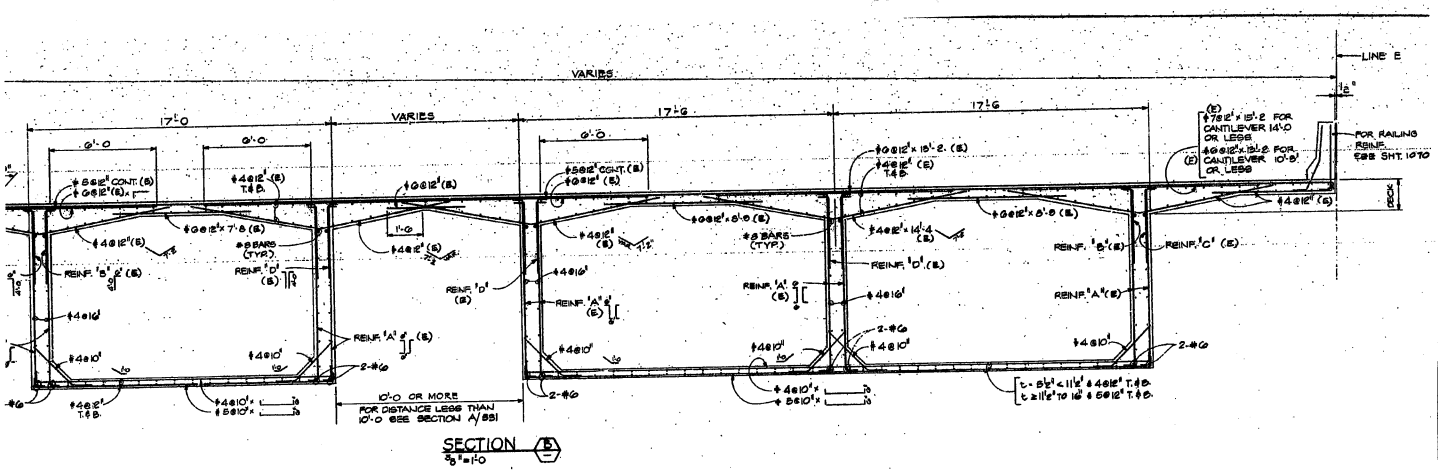

from sheet 532

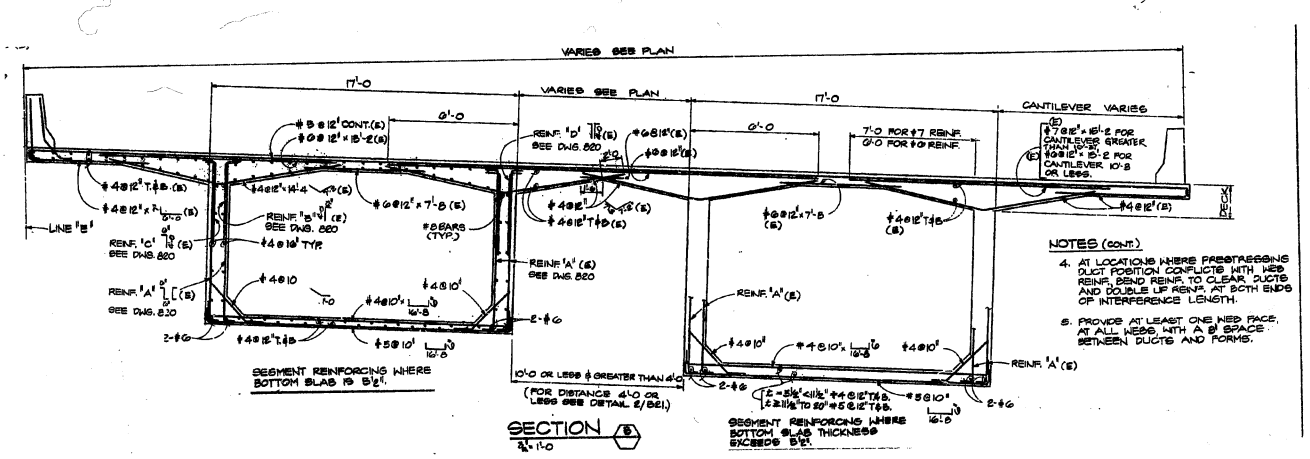

from sheet 521

4.6.1 Brug Model

BRUG SECTIONS

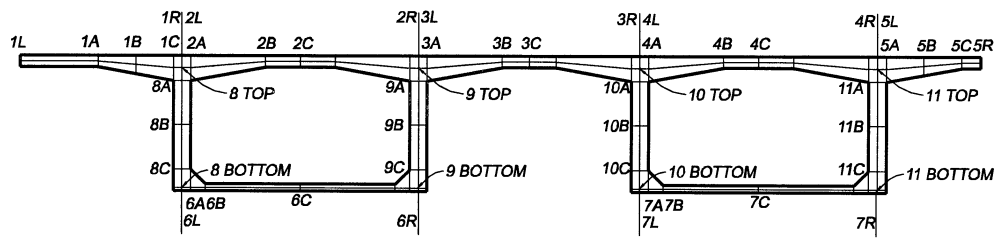

✓DKM
1/15/09

9.6.1

HALF SIZE PRINT - 11x17					
No.	Date	App.	Revisions	Designed by	
				Drawn by R.V.A.	
				Checked by	
				DRAWING SCALE	

URS Corporation Southern
7650 Corporate Center Drive
Suite 400
Miami, FL 33126-1220
Tel: (305) 262-7466
C.A. No. EB 00000002

TYPICAL SECTION - Transverse Analysis

SECTION IIIA

DRAWING NO.

SHEET NO.

NAME P.C. NO

FILES

dadd_mrlcad 1/15/2009 5:55:58 PM

BRUG MODEL

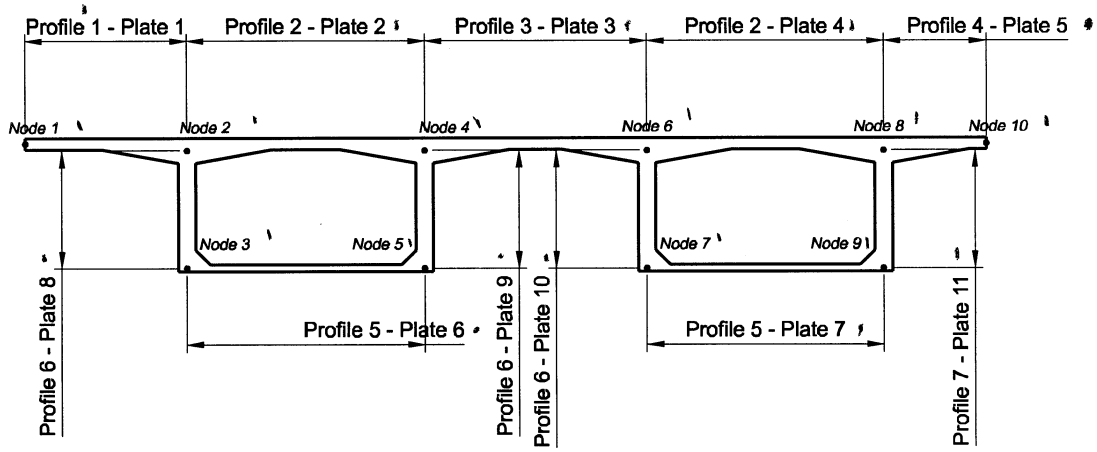

Joum
1/16/09

4.6.1/2

HALF SIZE PRINT - 11x17

Designed by
Drawn by R.V.A.
Checked by
DRAWING SCALE:

URS Corporation Southern
7650 Corporate Center Drive
Suite 400
Miami, FL 33126-1220
Tel: (305) 262-7488
C.A. No. EB 00000002

TYPICAL SECTION - Transverse Analysis

SECTION IIIA

DRAWING NO.
SHEET NO.

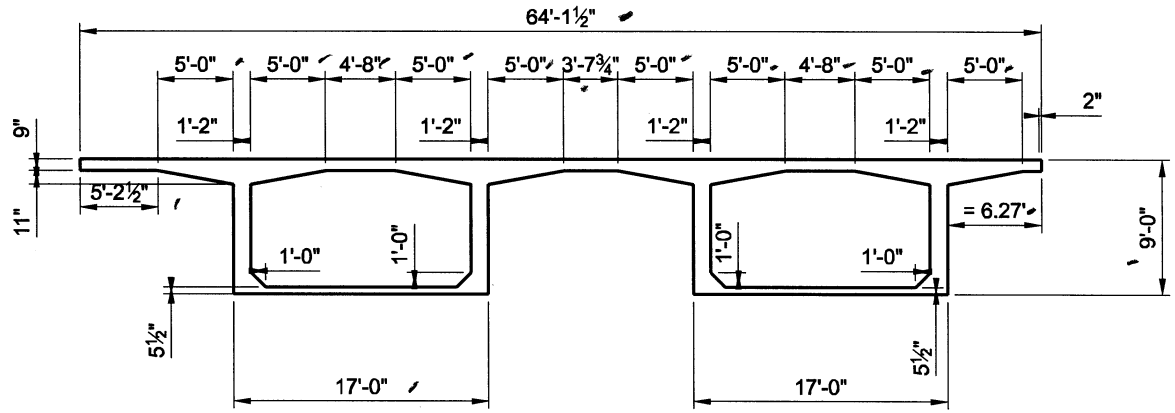

DIMENSIONS

JDeem
09/26/09

4.6.1/3

HALF SIZE PRINT - 11x17

Designed by
Drawn by R.V.A.
Checked by
DRAWING SCALE

URS
URS Corporation Southern
7650 Corporate Center Drive
Suite 400
Miami, FL 33126-1220
Tel. (305) 262-7488
C.A. No. 6/8 00000002

TYPICAL SECTION - Transverse Analysis

SECTION IIIA

DRAWING NO.
SHEET NO.
NAME F.E. NO.
SFILE.DLE

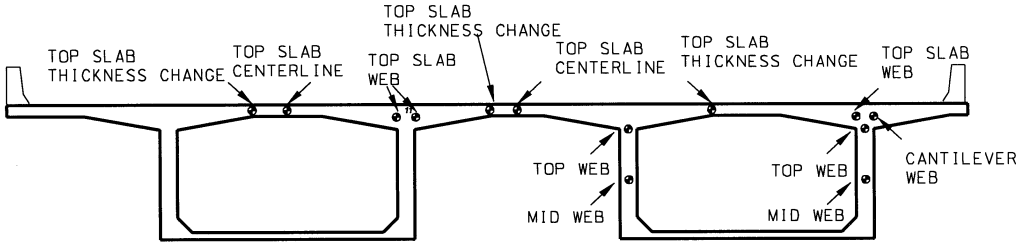

RATING POINTS

✓Dkm
1/15/09

4.6.1/4

HALF SIZE PRINT - 11x17

No	Date	App	Revisions

Designed by
Drawn by R.V.A.
Checked by
DRAWING SCALE:

URS Corporation Southern
7650 Corporate Center Drive
Suite 400
Miami, FL 33126-1220
Tel: (305) 262-7486
C.A. No. ER 00000002

TYPICAL SECTION - Transverse Analysis

SECTION IIIA

DRAWING NO.
SHEET NO.
NAME P.C. NO.
SFILE.E

URS CORPORATION	Made by:	PT	Date: 20-Jan-09	Job Number: 25626272.00001	Job Number: 25626272.00001
	Checked by:	Dum	Date: 01/20/09	Sheet Number:	Sheet Number:
Brug Joints and Members	Backchecked by:		Date:		

V:\Projects\Cline Avenue\Load Rating Analysis\Transverse Analysis\Spreadsheet\[Brug Input.xls]Model_Joints Brugh_IIIA
Data measured from Microstation File
V:\Projects\Cline Avenue\Load Rating Analysis\Transverse Analysis\Spreadsheet\[Brug Input.xls]Model_Joints Brugh_IIIA

GTStrudl Joint	X ft	Y ft	Height ft	BRUG NODE
1	0.0000	8.1667	0.750	1
2	5.2083	8.1667	0.750	
3	7.7083	8.1667	1.208	
4	10.2083	8.1667	1.667	
5	10.7917	8.1667	1.667	2
6	11.3750	8.1667	1.667	
7	16.3750	8.1667	0.750	
8	18.7083	8.1667	0.750	
9	21.0417	8.1667	0.750	
10	26.0417	8.1667	1.667	
11	26.6250	8.1667	1.667	4
12	27.2083	8.1667	1.667	
13	32.2083	8.1667	0.750	
14	34.0317	8.1667	0.750	
15	35.8550	8.1667	0.750	
16	40.8550	8.1667	1.667	
17	41.4383	8.1667	1.667	6
18	42.0217	8.1667	1.667	
19	47.0217	8.1667	0.750	
20	49.3550	8.1667	0.750	
21	51.6883	8.1667	0.750	
22	56.6883	8.1667	1.667	
23	57.2717	8.1667	1.667	8
24	57.8550	8.1667	1.667	
25	60.3550	8.1667	1.208	
26	62.8550	8.1667	0.750	
27	64.1250	8.1667	0.750	10
28	10.7917	7.3333	1.167	
29	10.7917	4.3958	1.167	
30	10.7917	1.4583	1.167	
31	10.7917	0.2292	1.167	3
32	11.3750	0.2292	1.458	
33	12.3750	0.2292	0.458	
34	18.7083	0.2292	0.458	
35	25.0417	0.2292	0.458	
36	26.0417	0.2292	1.458	
37	26.6250	0.2292	1.167	5
38	26.6250	1.4583	1.167	
39	26.6250	4.3958	1.167	
40	26.6250	7.3333	1.167	
42	41.4383	7.3333	1.167	
43	41.4383	4.3958	1.167	
44	41.4383	1.4583	1.167	
45	41.4383	0.2292	1.458	7
46	42.0217	0.2292	0.458	
47	43.0217	0.2292	0.458	
48	49.3550	0.2292	0.458	

GTStrudl MEMBER	BEGIN JOINT	END JOINT	Length ft
1	1	2	5.208
2	2	3	2.500
3	3	4	2.500
4	4	5	0.583
5	5	6	0.583
6	6	7	5.000
7	7	8	2.333
8	8	9	2.333
9	9	10	5.000
10	10	11	0.583
11	11	12	0.583
12	12	13	5.000
13	13	14	1.823
14	14	15	1.823
15	15	16	5.000
16	16	17	0.583
17	17	18	0.583
18	18	19	5.000
19	19	20	2.333
20	20	21	2.333
21	21	22	5.000
22	22	23	0.583
23	23	24	0.583
24	24	25	2.500
25	25	26	2.500
26	26	27	1.270
27	5	28	0.833
28	28	29	2.937
29	29	30	2.938
30	30	31	1.229
31	31	32	0.583
32	32	33	1.000
33	33	34	6.333
34	34	35	6.333
35	35	36	1.000
36	36	37	0.583
37	37	38	1.229
38	38	39	2.938
39	39	40	2.937
40	40	11	0.833
41	17	42	0.833
42	42	43	2.937
43	43	44	2.938
44	44	45	1.229
45	45	46	0.583
46	46	47	1.000
47	47	48	6.333

LEFT CANTILEVER (Profile 1)

GT Joint	Brug Section	Brug Joint	Length	Height
1	1L	1	0.0000	0.750
2	1A	2	5.2083	0.750
3	1B	3	7.7083	1.208
4	1C	4	10.2083	1.667
5	1R	5	10.7917	1.667

LEFT CELL (Profile 2)

GT Joint	Brug Section	Brug Joint	Length	Height
5	2L	1	0.0000	1.667
6	2A	2	0.5833	1.667
7	2B	3	5.5833	0.750
8	2C	4	7.9167	0.750
9		5	10.2500	0.750
10		6	15.2500	1.667
11	2R	7	15.8333	1.667

SPAN BETWEEN CELLS (Profile 3)

GT Joint	Brug Section	Brug Joint	Length	Height
11	3L	1	0.0000	1.667
12	3A	2	0.5833	1.667
13	3B	3	5.5833	0.750
14	3C	4	7.4067	0.750
15		5	9.2300	0.750
16		6	14.2300	1.667
17	3R	7	14.8133	1.667

RIGHT CANTILEVER (Profile 4)

GT Joint	Brug Section	Brug Joint	Length	Height
23	5L	1	0.0000	1.667
24	5A	2	0.5833	1.667
25	5B	3	3.0833	1.208
26	5C	4	5.5833	0.750
27	5R	5	6.8533	0.750

BOTTOM SLAB LEFT (Profile 5)

GT Joint	Brug Section	Brug Joint	Length	Height
31	6L	1	0.0000	1.458
32	6A	2	0.5833	1.458
33	6B	3	1.5833	0.458
34	6C	4	7.9167	0.458
35		5	14.2500	0.458
36		6	15.2500	1.458
37	6R	7	15.8333	1.458

LEFT WEB (Profile 6)

GT Joint	Brug Section	Brug Joint	Length	Height
5	8 TOP	1	0.0000	1.167
28	8A	2	0.8334	1.167
29	8B	3	3.7709	1.167
30	8C	4	6.7084	1.167
31	8 BOTTOM	5	7.9375	1.167

4.6.1/5

URS CORPORATION	Made by:	PT	Date: 20-Jan-09	Job Number: 25626272.00001	Job Number: 25626272.00001
	Checked by:	DJM	Date: 01/20/09	Sheet Number:	Sheet Number:
Brug Joints and Members	Backchecked by:		Date:		

Data measured from Microstation File
V:\Projects\Cline Avenue\Load Rating Analysis\Transverse Analysis\Spreadsheet\[Brug Input.xls]Model_Joints Brugh_IIIA

GTStrudl Joint	X ft	Y ft	Height ft	BRUG NODE
49	55.6883	0.2292	1.458	
50	56.6883	0.2292	1.167	
51	57.2717	0.2292	1.167	9
52	57.2717	1.4583	1.167	
53	57.2717	4.3958	1.167	
54	57.2717	7.3333	1.167	

GTStrudl MEMBER	BEGIN JOINT	END JOINT	Length ft
48	48	49	6.333
49	49	50	1.000
50	50	51	0.583
51	51	52	1.229
52	52	53	2.938
53	53	54	2.937
54	54	23	0.833

4.6.1/6

TRUCK LOCATION - NO TRAFFIC ON SHOULDERS

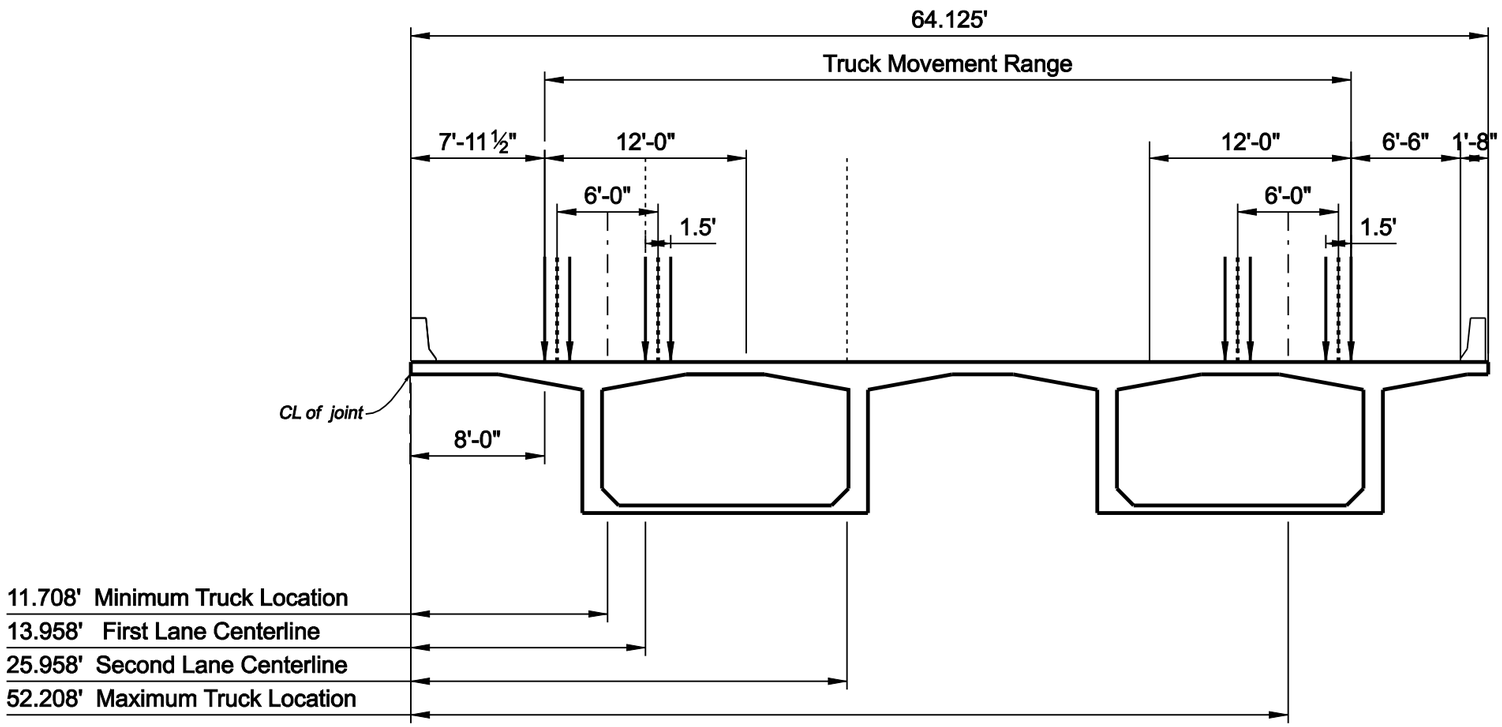

Design by: PT 9/09
Independent Check by: RJB 9/09

HALF SIZE PRINT - 11x17

No.	Date	App.	Revisions

Designed by .
Drawn by R.V.A.
Checked by .
DRAWING SCALE:

URS Corporation Southern
7650 Corporate Center Drive
Suite 400
Miami, FL 33126-1220
Tel: (305) 262-7498
C.A. No. EB 00000002

TYPICAL SECTION - Transverse Analysis

SECTION IIIA

DRAWING NO. . SHEET NO. .

4.6.1/7

4.6.2 Brug Input AASHTO Lanes

```
* start ; column 11-30 can be used to have your own text on the top of each page
*   5   10   15   20   25   30   35   40   45   50   55   60   65   70   75   80
*   V    V    V    V    V    V    V    V    V    V    V    V    V    V    V    V
00001  1 1     VEH: HL93- TRUCK - SINGLE TRUCK
* code 1001
Cline Avenue - Load Rating - Double Box - 4 Webs - 64.125' Wide - Single Vehicle
* code 1002
    2         1
* code 1003
*   5   10   15   20   25   30   35   40   45   50   55   60   65   70   75   80
*   V    V    V    V    V    V    V    V    V    V    V    V    V    V    V    V
250.0     182.0     64.1250   1.0       1.0       1.3
* code 1004
    1    0    2
* code 1005
   72    1
* code 1005a
* location traffic lanes
7.667
* maximum and minimum truck
6.667     57.458    10.000
* code 1007, linear loads
0.7350    0.441
63.39     0.441
* code 1201
   10    6    5    2    4
* code 1202 coordinates
0.0000    0.0
10.7917   0.0
10.7917   -7.9375
26.6250   0.0
26.6250   -7.9375
41.4383   0.0
41.4383   -7.9375
57.2717   0.0
57.2717   -7.9375
64.1250   0.0
* code 1203 - profile 1
    5    2    3    4
0.0000    0.750
5.2083    0.750
7.7083    1.208
10.2083   1.667
10.7917   1.667
* code 1203 - profile 2
    7    2    3    4
0.0000    1.667
0.5833    1.667
5.5833    0.750
7.9167    0.750
10.2500   0.750
15.2500   1.667
15.8333   1.667
* code 1203 - profile 3
    7    2    3    4
0.0000    1.667
0.5833    1.667
5.5833    0.750
7.4067    0.750
9.2300    0.750
14.2300   1.667
14.8133   1.667
* code 1203 - profile 4
    5    2    3    4
0.0000    1.667
0.5833    1.667
3.0833    1.208
5.5833    0.750
6.8533    0.750
* code 1203 - profile 5
    7    2    3    4
0.0000    1.458
0.5833    1.458
1.5833    0.458
7.9167    0.458
14.2500   0.458
15.2500   1.458
15.8333   1.458
* code 1203 - profile 6
    5    2    3    4
0.0000    1.167
```

```
0.8334    1.167
3.7709    1.167
6.7084    1.167
7.9375    1.167
* code 1204 - assembling boxgirder
    1    2    1
    2    4    2
    4    6    3
    6    8    2
    8   10    4
    3    5    5
    7    9    5
    2    3    6
    4    5    6
    6    7    6
    8    9    6
* code 1205 control code
    1    2   13    1    1    0    4    3     1.0       1.0
* code 1206 wheels/axle
       0.0
       1.5
       6.0
       7.5 0.833
* code 1207 definition axles
0.0       0.1
14.0      0.4
28.0      0.4
* code 1208 - accuracy
0.00001   0.00001   0.00001   .00001    .00001
* code 1209 number sections
   45
   1A   1B   1C   1R   2L   2A   2B   2C   2R   3L   3A   3B   3C   3R
   4L   4A   4B   4C   4R   5L   5A   5B   5C
   6A   6B   6C   7A   7B   7C   8L   8A   8B   8C   9L   9A   9B   9C
  10L  10A  10B  10C  11L  11A  11B  11C
* code 1210 - density conrete
0.156
* code 1211 - extra forces selfweight

* code 1212 - surcharge
1.603
* code 1213 - Prestressing Layout - NONE
•
```

```
* start ; column 11-30 can be used to have your own text on the top of each page
*   5   10   15   20   25   30   35   40   45   50   55   60   65   70   75   80
*   V    V    V    V    V    V    V    V    V    V    V    V    V    V    V    V
00001  1 1     VEH: HL93- TANDEM- SINGLE TRUCK
* code 1001
Cline Avenue - Load Rating - Double Box - 4 Webs - 64.125' Wide
* code 1002
    2         1
* code 1003
*   5   10   15   20   25   30   35   40   45   50   55   60   65   70   75   80
*   V    V    V    V    V    V    V    V    V    V    V    V    V    V    V    V
250.0     182.0     64.1250   1.0       1.0       1.3
* code 1004
    1    0    2
* code 1005
   50    1
* code 1005a
* location traffic lanes
7.667
* maximum and minimum truck
6.667     57.458    10.000
* code 1007, linear loads
0.7350    0.441
63.39     0.441
* code 1201
   10    6    5    2    4
* code 1202 coordinates
0.0000    0.0
10.7917   0.0
10.7917   -7.9375
26.6250   0.0
26.6250   -7.9375
41.4383   0.0
41.4383   -7.9375
57.2717   0.0
57.2717   -7.9375
64.1250   0.0
* code 1203 - profile 1
    5    2    3    4
0.0000    0.750
5.2083    0.750
7.7083    1.208
10.2083   1.667
10.7917   1.667
* code 1203 - profile 2
    7    2    3    4
0.0000    1.667
0.5833    1.667
5.5833    0.750
7.9167    0.750
10.2500   0.750
15.2500   1.667
15.8333   1.667
* code 1203 - profile 3
    7    2    3    4
0.0000    1.667
0.5833    1.667
5.5833    0.750
7.4067    0.750
9.2300    0.750
14.2300   1.667
14.8133   1.667
* code 1203 - profile 4
    5    2    3    4
0.0000    1.667
0.5833    1.667
3.0833    1.208
5.5833    0.750
6.8533    0.750
* code 1203 - profile 5
    7    2    3    4
0.0000    1.458
0.5833    1.458
1.5833    0.458
7.9167    0.458
14.2500   0.458
15.2500   1.458
15.8333   1.458
* code 1203 - profile 6
    5    2    3    4
0.0000    1.167
```

1_III_A_HL93_tandem_EL.txt 9/11/2009

```
0.8334    1.167
3.7709    1.167
6.7084    1.167
7.9375    1.167
* code 1204 - assembling boxgirder
    1    2    1
    2    4    2
    4    6    3
    6    8    2
    8   10    4
    3    5    5
    7    9    5
    2    3    6
    4    5    6
    6    7    6
    8    9    6
* code 1205 control code
    1    2   13    1    1    0    4    2     1.0       1.0
* code 1206 wheels/axle
       0.0
       1.5
       6.0
       7.5 0.833
* code 1207 definition axles
0.0       0.5
4.0       0.5
* code 1208 - accuracy
0.00001   0.00001   0.00001   .00001    .00001
* code 1209 number sections
   45
   1A   1B   1C   1R   2L   2A   2B   2C   2R   3L   3A   3B   3C   3R
   4L   4A   4B   4C   4R   5L   5A   5B   5C
   6A   6B   6C   7A   7B   7C   8L   8A   8B   8C   9L   9A   9B   9C
  10L  10A  10B  10C  11L  11A  11B  11C
* code 1210 - density conrete
0.156
* code 1211 - extra forces selfweight

* code 1212 - surcharge
1.603
* code 1213 - Prestressing Layout - NONE
```

```
* start ; column 11-30 can be used to have your own text on the top of each page
*   5   10   15   20   25   30   35   40   45   50   55   60   65   70   75   80
*   V    V    V    V    V    V    V    V    V    V    V    V    V    V    V    V
00001  1 1     VEH: R1 - TOLL ROAD LOADING No. 1- SINGLE TRUCK
* code 1001
Cline Avenue - Load Rating - Double Box - 4 Webs - 64.125' Wide
* code 1002
    2         1
* code 1003
*   5   10   15   20   25   30   35   40   45   50   55   60   65   70   75   80
*   V    V    V    V    V    V    V    V    V    V    V    V    V    V    V    V
250.0     182.0     64.1250   1.0       1.0       1.3
* code 1004
    1    0    2
* code 1005
   90    1
* code 1005a
* location traffic lanes
7.667
* maximum and minimum truck
6.667     57.458    10.000
* code 1007, linear loads
0.7350    0.441
63.39     0.441
* code 1201
   10    6    5    2    4
* code 1202 coordinates
0.0000    0.0
10.7917   0.0
10.7917   -7.9375
26.6250   0.0
26.6250   -7.9375
41.4383   0.0
41.4383   -7.9375
57.2717   0.0
57.2717   -7.9375
64.1250   0.0
* code 1203 - profile 1
    5    2    3    4
0.0000    0.750
5.2083    0.750
7.7083    1.208
10.2083   1.667
10.7917   1.667
* code 1203 - profile 2
    7    2    3    4
0.0000    1.667
0.5833    1.667
5.5833    0.750
7.9167    0.750
10.2500   0.750
15.2500   1.667
15.8333   1.667
* code 1203 - profile 3
    7    2    3    4
0.0000    1.667
0.5833    1.667
5.5833    0.750
7.4067    0.750
9.2300    0.750
14.2300   1.667
14.8133   1.667
* code 1203 - profile 4
    5    2    3    4
0.0000    1.667
0.5833    1.667
3.0833    1.208
5.5833    0.750
6.8533    0.750
* code 1203 - profile 5
    7    2    3    4
0.0000    1.458
0.5833    1.458
1.5833    0.458
7.9167    0.458
14.2500   0.458
15.2500   1.458
15.8333   1.458
* code 1203 - profile 6
    5    2    3    4
0.0000    1.167
```

```
0.8334    1.167
3.7709    1.167
6.7084    1.167
7.9375    1.167
* code 1204 - assembling boxgirder
    1    2    1
    2    4    2
    4    6    3
    6    8    2
    8   10    4
    3    5    5
    7    9    5
    2    3    6
    4    5    6
    6    7    6
    8    9    6
* code 1205 control code
    1    2   13    1    1    0    4    5     1.0       1.0
* code 1206 wheels/axle
       0.0
       1.5
       6.0
       7.5 0.833
* code 1207 definition axles
0.00      18.00
10.00     18.00
14.00     18.00
24.00     18.00
28.00     18.00
* code 1208 - accuracy
0.00001   0.00001   0.00001   .00001    .00001
* code 1209 number sections
   45
   1A   1B   1C   1R   2L   2A   2B   2C   2R   3L   3A   3B   3C   3R
   4L   4A   4B   4C   4R   5L   5A   5B   5C
   6A   6B   6C   7A   7B   7C   8L   8A   8B   8C   9L   9A   9B   9C
  10L  10A  10B  10C  11L  11A  11B  11C
* code 1210 - density conrete
0.156
* code 1211 - extra forces selfweight

* code 1212 - surcharge
1.603
* code 1213 - Prestressing Layout - NONE
•
```

```
* start ; column 11-30 can be used to have your own text on the top of each page
*   5   10   15   20   25   30   35   40   45   50   55   60   65   70   75   80
*   V    V    V    V    V    V    V    V    V    V    V    V    V    V    V    V
00001  1 1     VEH: R2 - TOLL ROAD LOADING No. 2- SINGLE TRUCK
* code 1001
Cline Avenue - Load Rating - Double Box - 4 Webs - 64.125' Wide
* code 1002
    2         1
* code 1003
*   5   10   15   20   25   30   35   40   45   50   55   60   65   70   75   80
*   V    V    V    V    V    V    V    V    V    V    V    V    V    V    V    V
250.0     182.0     64.1250   1.0       1.0       1.3
* code 1004
    1    0    2
* code 1005
   90    1
* code 1005a
* location traffic lanes
7.667
* maximum and minimum truck
6.667     57.458    10.000
* code 1007, linear loads
0.7350    0.441
63.39     0.441
* code 1201
   10    6    5    2    4
* code 1202 coordinates
0.0000    0.0
10.7917   0.0
10.7917   -7.9375
26.6250   0.0
26.6250   -7.9375
41.4383   0.0
41.4383   -7.9375
57.2717   0.0
57.2717   -7.9375
64.1250   0.0
* code 1203 - profile 1
    5    2    3    4
0.0000    0.750
5.2083    0.750
7.7083    1.208
10.2083   1.667
10.7917   1.667
* code 1203 - profile 2
    7    2    3    4
0.0000    1.667
0.5833    1.667
5.5833    0.750
7.9167    0.750
10.2500   0.750
15.2500   1.667
15.8333   1.667
* code 1203 - profile 3
    7    2    3    4
0.0000    1.667
0.5833    1.667
5.5833    0.750
7.4067    0.750
9.2300    0.750
14.2300   1.667
14.8133   1.667
* code 1203 - profile 4
    5    2    3    4
0.0000    1.667
0.5833    1.667
3.0833    1.208
5.5833    0.750
6.8533    0.750
* code 1203 - profile 5
    7    2    3    4
0.0000    1.458
0.5833    1.458
1.5833    0.458
7.9167    0.458
14.2500   0.458
15.2500   1.458
15.8333   1.458
* code 1203 - profile 6
    5    2    3    4
0.0000    1.167
```

1_III_A_R2_EL.txt 9/11/2009

```
0.8334    1.167
3.7709    1.167
6.7084    1.167
7.9375    1.167
* code 1204 - assembling boxgirder
    1    2    1
    2    4    2
    4    6    3
    6    8    2
    8   10    4
    3    5    5
    7    9    5
    2    3    6
    4    5    6
    6    7    6
    8    9    6
* code 1205 control code
    1    2   13    1    1    0    4    4     1.0       1.0
* code 1206 wheels/axle
       0.0
       1.5
       6.0
       7.5 0.833
* code 1207 definition axles
0.00      22.50
14.00     22.50
23.00     22.50
37.00     22.50
* code 1208 - accuracy
0.00001   0.00001   0.00001   .00001    .00001
* code 1209 number sections
   45
   1A   1B   1C   1R   2L   2A   2B   2C   2R   3L   3A   3B   3C   3R
   4L   4A   4B   4C   4R   5L   5A   5B   5C
   6A   6B   6C   7A   7B   7C   8L   8A   8B   8C   9L   9A   9B   9C
  10L  10A  10B  10C  11L  11A  11B  11C
* code 1210 - density conrete
0.156
* code 1211 - extra forces selfweight

* code 1212 - surcharge
1.603
* code 1213 - Prestressing Layout - NONE
```

```
* start ; column 11-30 can be used to have your own text on the top of each page
*   5   10   15   20   25   30   35   40   45   50   55   60   65   70   75   80
*   V    V    V    V    V    V    V    V    V    V    V    V    V    V    V    V
00001  1 1     VEH: R3 - TOLL ROAD LOADING No. 3 - SINGLE TRUCK
* code 1001
Cline Avenue - Load Rating - Double Box - 4 Webs - 64.125' Wide
* code 1002
    2         1
* code 1003
*   5   10   15   20   25   30   35   40   45   50   55   60   65   70   75   80
*   V    V    V    V    V    V    V    V    V    V    V    V    V    V    V    V
250.0     182.0     64.1250   1.0       1.0       1.3
* code 1004
    1    0    2
* code 1005
  126    1
* code 1005a
* location traffic lanes
7.667
* maximum and minimum truck
6.667     57.458    10.000
* code 1007, linear loads
0.7350    0.441
63.39     0.441
* code 1201
   10    6    5    2    4
* code 1202 coordinates
0.0000    0.0
10.7917   0.0
10.7917   -7.9375
26.6250   0.0
26.6250   -7.9375
41.4383   0.0
41.4383   -7.9375
57.2717   0.0
57.2717   -7.9375
64.1250   0.0
* code 1203 - profile 1
    5    2    3    4
0.0000    0.750
5.2083    0.750
7.7083    1.208
10.2083   1.667
10.7917   1.667
* code 1203 - profile 2
    7    2    3    4
0.0000    1.667
0.5833    1.667
5.5833    0.750
7.9167    0.750
10.2500   0.750
15.2500   1.667
15.8333   1.667
* code 1203 - profile 3
    7    2    3    4
0.0000    1.667
0.5833    1.667
5.5833    0.750
7.4067    0.750
9.2300    0.750
14.2300   1.667
14.8133   1.667
* code 1203 - profile 4
    5    2    3    4
0.0000    1.667
0.5833    1.667
3.0833    1.208
5.5833    0.750
6.8533    0.750
* code 1203 - profile 5
    7    2    3    4
0.0000    1.458
0.5833    1.458
1.5833    0.458
7.9167    0.458
14.2500   0.458
15.2500   1.458
15.8333   1.458
* code 1203 - profile 6
    5    2    3    4
0.0000    1.167
```

```
0.8334    1.167
3.7709    1.167
6.7084    1.167
7.9375    1.167
* code 1204 - assembling boxgirder
    1    2    1
    2    4    2
    4    6    3
    6    8    2
    8   10    4
    3    5    5
    7    9    5
    2    3    6
    4    5    6
    6    7    6
    8    9    6
* code 1205 control code
    1    2   13    1    1    0    4    7     1.0       1.0
* code 1206 wheels/axle
       0.0
       1.5
       6.0
       7.5 0.833
* code 1207 definition axles
0.00      18.00
10.00     18.00
14.00     18.00
40.00     18.00
44.00     18.00
56.00     18.00
76.00     18.00
* code 1208 - accuracy
0.00001   0.00001   0.00001   .00001    .00001
* code 1209 number sections
   45
   1A   1B   1C   1R   2L   2A   2B   2C   2R   3L   3A   3B   3C   3R
   4L   4A   4B   4C   4R   5L   5A   5B   5C
   6A   6B   6C   7A   7B   7C   8L   8A   8B   8C   9L   9A   9B   9C
  10L  10A  10B  10C  11L  11A  11B  11C
* code 1210 - density conrete
0.156
* code 1211 - extra forces selfweight

* code 1212 - surcharge
1.603
* code 1213 - Prestressing Layout - NONE
•
```

```
* start ; column 11-30 can be used to have your own text on the top of each page
*   5   10   15   20   25   30   35   40   45   50   55   60   65   70   75   80
*   V    V    V    V    V    V    V    V    V    V    V    V    V    V    V    V
00001  1 1     VEH: R4 - MICHIGAN TRUCK TRAIN No.5- SINGLE TRUCK
* code 1001
Cline Avenue - Load Rating - Double Box - 4 Webs - 64.125' Wide
* code 1002
    2         1
* code 1003
*   5   10   15   20   25   30   35   40   45   50   55   60   65   70   75   80
*   V    V    V    V    V    V    V    V    V    V    V    V    V    V    V    V
250.0     182.0     64.1250   1.0       1.0       1.3
* code 1004
    1    0    2
* code 1005
  134    1
* code 1005a
* location traffic lanes
7.667
* maximum and minimum truck
6.667     57.458    10.000
* code 1007, linear loads
0.7350    0.441
63.39     0.441
* code 1201
   10    6    5    2    4
* code 1202 coordinates
0.0000    0.0
10.7917   0.0
10.7917   -7.9375
26.6250   0.0
26.6250   -7.9375
41.4383   0.0
41.4383   -7.9375
57.2717   0.0
57.2717   -7.9375
64.1250   0.0
* code 1203 - profile 1
    5    2    3    4
0.0000    0.750
5.2083    0.750
7.7083    1.208
10.2083   1.667
10.7917   1.667
* code 1203 - profile 2
    7    2    3    4
0.0000    1.667
0.5833    1.667
5.5833    0.750
7.9167    0.750
10.2500   0.750
15.2500   1.667
15.8333   1.667
* code 1203 - profile 3
    7    2    3    4
0.0000    1.667
0.5833    1.667
5.5833    0.750
7.4067    0.750
9.2300    0.750
14.2300   1.667
14.8133   1.667
* code 1203 - profile 4
    5    2    3    4
0.0000    1.667
0.5833    1.667
3.0833    1.208
5.5833    0.750
6.8533    0.750
* code 1203 - profile 5
    7    2    3    4
0.0000    1.458
0.5833    1.458
1.5833    0.458
7.9167    0.458
14.2500   0.458
15.2500   1.458
15.8333   1.458
* code 1203 - profile 6
    5    2    3    4
0.0000    1.167
```

```
0.8334    1.167
3.7709    1.167
6.7084    1.167
7.9375    1.167
* code 1204 - assembling boxgirder
    1    2    1
    2    4    2
    4    6    3
    6    8    2
    8   10    4
    3    5    5
    7    9    5
    2    3    6
    4    5    6
    6    7    6
    8    9    6
* code 1205 control code
    1    2   13    1    1    0    4    8     1.0       1.0
* code 1206 wheels/axle
       0.0
       1.5
       6.0
       7.5 0.833
* code 1207 definition axles
0.00      12.00
9.00      16.00
12.50     16.00
21.50     18.00
30.50     18.00
39.50     18.00
48.50     18.00
57.50     18.00
* code 1208 - accuracy
0.00001   0.00001   0.00001   .00001    .00001
* code 1209 number sections
   45
   1A   1B   1C   1R   2L   2A   2B   2C   2R   3L   3A   3B   3C   3R
   4L   4A   4B   4C   4R   5L   5A   5B   5C
   6A   6B   6C   7A   7B   7C   8L   8A   8B   8C   9L   9A   9B   9C
  10L  10A  10B  10C  11L  11A  11B  11C
* code 1210 - density conrete
0.156
* code 1211 - extra forces selfweight

* code 1212 - surcharge
1.603
* code 1213 - Prestressing Layout - NONE
```

```
* start ; column 11-30 can be used to have your own text on the top of each page
*   5   10   15   20   25   30   35   40   45   50   55   60   65   70   75   80
*   V    V    V    V    V    V    V    V    V    V    V    V    V    V    V    V
00001  1 1     VEH: R5 - MICHIGAN TRUCK TRAIN No. 8- SINGLE TRUCK
* code 1001
Cline Avenue - Load Rating - Double Box - 4 Webs - 64.125' Wide
* code 1002
    2         1
* code 1003
*   5   10   15   20   25   30   35   40   45   50   55   60   65   70   75   80
*   V    V    V    V    V    V    V    V    V    V    V    V    V    V    V    V
250.0     182.0     64.1250   1.0       1.0       1.3
* code 1004
    1    0    2
* code 1005
* Vehicle weight is 134.2 Kips, rounded to 135
  135    1
* code 1005a
* location traffic lanes
7.667
* maximum and minimum truck
6.667     57.458    10.000
* code 1007, linear loads
0.7350    0.441
63.39     0.441
* code 1201
   10    6    5    2    4
* code 1202 coordinates
0.0000    0.0
10.7917   0.0
10.7917   -7.9375
26.6250   0.0
26.6250   -7.9375
41.4383   0.0
41.4383   -7.9375
57.2717   0.0
57.2717   -7.9375
64.1250   0.0
* code 1203 - profile 1
    5    2    3    4
0.0000    0.750
5.2083    0.750
7.7083    1.208
10.2083   1.667
10.7917   1.667
* code 1203 - profile 2
    7    2    3    4
0.0000    1.667
0.5833    1.667
5.5833    0.750
7.9167    0.750
10.2500   0.750
15.2500   1.667
15.8333   1.667
* code 1203 - profile 3
    7    2    3    4
0.0000    1.667
0.5833    1.667
5.5833    0.750
7.4067    0.750
9.2300    0.750
14.2300   1.667
14.8133   1.667
* code 1203 - profile 4
    5    2    3    4
0.0000    1.667
0.5833    1.667
3.0833    1.208
5.5833    0.750
6.8533    0.750
* code 1203 - profile 5
    7    2    3    4
0.0000    1.458
0.5833    1.458
1.5833    0.458
7.9167    0.458
14.2500   0.458
15.2500   1.458
15.8333   1.458
* code 1203 - profile 6
    5    2    3    4
```

1_III_A_R5_EL.txt 9/11/2009

```
0.0000    1.167
0.8334    1.167
3.7709    1.167
6.7084    1.167
7.9375    1.167
* code 1204 - assembling boxgirder
    1    2    1
    2    4    2
    4    6    3
    6    8    2
    8   10    4
    3    5    5
    7    9    5
    2    3    6
    4    5    6
    6    7    6
    8    9    6
* code 1205 control code
    1    2   13    1    1    0    4   11     1.0       1.0
* code 1206 wheels/axle
       0.0
       1.5
       6.0
       7.5 0.833
* code 1207 definition axles
0.00      12.00
9.00      13.40
12.50     13.40
21.50     10.90
25.00     10.90
28.50     10.90
32.00     10.90
35.50     10.90
39.00     10.90
48.00     15.00
57.00     15.00
* code 1208 - accuracy
0.00001   0.00001   0.00001   .00001    .00001
* code 1209 number sections
   45
   1A   1B   1C   1R   2L   2A   2B   2C   2R   3L   3A   3B   3C   3R
   4L   4A   4B   4C   4R   5L   5A   5B   5C
   6A   6B   6C   7A   7B   7C   8L   8A   8B   8C   9L   9A   9B   9C
  10L  10A  10B  10C  11L  11A  11B  11C
* code 1210 - density conrete
0.156
* code 1211 - extra forces selfweight

* code 1212 - surcharge
1.603
* code 1213 - Prestressing Layout - NONE
```

```
* start ; column 11-30 can be used to have your own text on the top of each page
*   5   10   15   20   25   30   35   40   45   50   55   60   65   70   75   80
*   V    V    V    V    V    V    V    V    V    V    V    V    V    V    V    V
00001  1 1     VEH: S1 - SPECIAL TRUCK 11 AXLE- SINGLE TRUCK
* code 1001
Cline Avenue - Load Rating - Double Box - 4 Webs - 64.125' Wide
* code 1002
    2         1
* code 1003
*   5   10   15   20   25   30   35   40   45   50   55   60   65   70   75   80
*   V    V    V    V    V    V    V    V    V    V    V    V    V    V    V    V
250.0     182.0     64.1250   1.0       1.0       1.3
* code 1004
    1    0    2
* code 1005
  258    1
* code 1005a
* location traffic lanes
7.667
* maximum and minimum truck
6.667     57.458    10.000
* code 1007, linear loads
0.7350    0.441
63.39     0.441
* code 1201
   10    6    5    2    4
* code 1202 coordinates
0.0000    0.0
10.7917   0.0
10.7917   -7.9375
26.6250   0.0
26.6250   -7.9375
41.4383   0.0
41.4383   -7.9375
57.2717   0.0
57.2717   -7.9375
64.1250   0.0
* code 1203 - profile 1
    5    2    3    4
0.0000    0.750
5.2083    0.750
7.7083    1.208
10.2083   1.667
10.7917   1.667
* code 1203 - profile 2
    7    2    3    4
0.0000    1.667
0.5833    1.667
5.5833    0.750
7.9167    0.750
10.2500   0.750
15.2500   1.667
15.8333   1.667
* code 1203 - profile 3
    7    2    3    4
0.0000    1.667
0.5833    1.667
5.5833    0.750
7.4067    0.750
9.2300    0.750
14.2300   1.667
14.8133   1.667
* code 1203 - profile 4
    5    2    3    4
0.0000    1.667
0.5833    1.667
3.0833    1.208
5.5833    0.750
6.8533    0.750
* code 1203 - profile 5
    7    2    3    4
0.0000    1.458
0.5833    1.458
1.5833    0.458
7.9167    0.458
14.2500   0.458
15.2500   1.458
15.8333   1.458
* code 1203 - profile 6
    5    2    3    4
0.0000    1.167
```

1_III_A_S1_EL.txt 9/11/2009

```
0.8334    1.167
3.7709    1.167
6.7084    1.167
7.9375    1.167
* code 1204 - assembling boxgirder
    1    2    1
    2    4    2
    4    6    3
    6    8    2
    8   10    4
    3    5    5
    7    9    5
    2    3    6
    4    5    6
    6    7    6
    8    9    6
* code 1205 control code
    1    2   13    1    1    0    4   11     1.0       1.0
* code 1206 wheels/axle
       0.0
       1.5
       6.0
       7.5 0.833
* code 1207 definition axles
0.00      12.00
11.50     24.60
16.67     24.60
21.67     24.60
34.83     24.60
39.33     24.60
89.92     24.60
94.42     24.60
98.92     24.60
112.50     24.60
117.00     24.60
* code 1208 - accuracy
0.00001   0.00001   0.00001   .00001    .00001
* code 1209 number sections
   45
   1A   1B   1C   1R   2L   2A   2B   2C   2R   3L   3A   3B   3C   3R
   4L   4A   4B   4C   4R   5L   5A   5B   5C
   6A   6B   6C   7A   7B   7C   8L   8A   8B   8C   9L   9A   9B   9C
  10L  10A  10B  10C  11L  11A  11B  11C
* code 1210 - density conrete
0.156
* code 1211 - extra forces selfweight

* code 1212 - surcharge
1.603
* code 1213 - Prestressing Layout - NONE
```

```
* start ; column 11-30 can be used to have your own text on the top of each page
*   5   10   15   20   25   30   35   40   45   50   55   60   65   70   75   80
*   V    V    V    V    V    V    V    V    V    V    V    V    V    V    V    V
00001  1 1     VEH: S2 - SPECIAL TRUCK - 13 AXLE- SINGLE TRUCK
* code 1001
Cline Avenue - Load Rating - Double Box - 4 Webs - 64.125' Wide
* code 1002
    2         1
* code 1003
*   5   10   15   20   25   30   35   40   45   50   55   60   65   70   75   80
*   V    V    V    V    V    V    V    V    V    V    V    V    V    V    V    V
250.0     182.0     64.1250   1.0       1.0       1.3
* code 1004
    1    0    2
* code 1005
  267    1
* code 1005a
* location traffic lanes
7.667
* maximum and minimum truck
6.667     57.458    10.000
* code 1007, linear loads
0.7350    0.441
63.39     0.441
* code 1201
   10    6    5    2    4
* code 1202 coordinates
0.0000    0.0
10.7917   0.0
10.7917   -7.9375
26.6250   0.0
26.6250   -7.9375
41.4383   0.0
41.4383   -7.9375
57.2717   0.0
57.2717   -7.9375
64.1250   0.0
* code 1203 - profile 1
    5    2    3    4
0.0000    0.750
5.2083    0.750
7.7083    1.208
10.2083   1.667
10.7917   1.667
* code 1203 - profile 2
    7    2    3    4
0.0000    1.667
0.5833    1.667
5.5833    0.750
7.9167    0.750
10.2500   0.750
15.2500   1.667
15.8333   1.667
* code 1203 - profile 3
    7    2    3    4
0.0000    1.667
0.5833    1.667
5.5833    0.750
7.4067    0.750
9.2300    0.750
14.2300   1.667
14.8133   1.667
* code 1203 - profile 4
    5    2    3    4
0.0000    1.667
0.5833    1.667
3.0833    1.208
5.5833    0.750
6.8533    0.750
* code 1203 - profile 5
    7    2    3    4
0.0000    1.458
0.5833    1.458
1.5833    0.458
7.9167    0.458
14.2500   0.458
15.2500   1.458
15.8333   1.458
* code 1203 - profile 6
    5    2    3    4
0.0000    1.167
```

1_III_A_S2_EL.txt 9/11/2009

```
0.8334    1.167
3.7709    1.167
6.7084    1.167
7.9375    1.167
* code 1204 - assembling boxgirder
    1    2    1
    2    4    2
    4    6    3
    6    8    2
    8   10    4
    3    5    5
    7    9    5
    2    3    6
    4    5    6
    6    7    6
    8    9    6
* code 1205 control code
    1    2   13    1    1    0    4   13     1.0       1.0
* code 1206 wheels/axle
       0.0
       1.5
       6.0
       7.5 0.833
* code 1207 definition axles
0.00      15.00
16.50     21.00
21.00     21.00
25.50     21.00
39.50     21.00
44.00     21.00
48.50     21.00
96.50     21.00
101.00    21.00
105.50    21.00
121.00    21.00
125.50    21.00
130.00    21.00
* code 1208 - accuracy
0.00001   0.00001   0.00001   .00001    .00001
* code 1209 number sections
   45
   1A   1B   1C   1R   2L   2A   2B   2C   2R   3L   3A   3B   3C   3R
   4L   4A   4B   4C   4R   5L   5A   5B   5C
   6A   6B   6C   7A   7B   7C   8L   8A   8B   8C   9L   9A   9B   9C
  10L  10A  10B  10C  11L  11A  11B  11C
* code 1210 - density conrete
0.156
* code 1211 - extra forces selfweight

* code 1212 - surcharge
1.603
* code 1213 - Prestressing Layout - NONE
```

```
* start ; column 11-30 can be used to have your own text on the top of each page
*   5   10   15   20   25   30   35   40   45   50   55   60   65   70   75   80
*   V    V    V    V    V    V    V    V    V    V    V    V    V    V    V    V
00001  1 1     VEH: S3 - SPECIAL TRUCK - 14 AXLE- SINGLE TRUCK
* code 1001
Cline Avenue - Load Rating - Double Box - 4 Webs - 64.125' Wide
* code 1002
    2         1
* code 1003
*   5   10   15   20   25   30   35   40   45   50   55   60   65   70   75   80
*   V    V    V    V    V    V    V    V    V    V    V    V    V    V    V    V
250.0     182.0     64.1250   1.0       1.0       1.3
* code 1004
    1    0    2
* code 1005
  350    1
* code 1005a
* location traffic lanes
7.667
* maximum and minimum truck
6.667     57.458    10.000
* code 1007, linear loads
0.7350    0.441
63.39     0.441
* code 1201
   10    6    5    2    4
* code 1202 coordinates
0.0000    0.0
10.7917   0.0
10.7917   -7.9375
26.6250   0.0
26.6250   -7.9375
41.4383   0.0
41.4383   -7.9375
57.2717   0.0
57.2717   -7.9375
64.1250   0.0
* code 1203 - profile 1
    5    2    3    4
0.0000    0.750
5.2083    0.750
7.7083    1.208
10.2083   1.667
10.7917   1.667
* code 1203 - profile 2
    7    2    3    4
0.0000    1.667
0.5833    1.667
5.5833    0.750
7.9167    0.750
10.2500   0.750
15.2500   1.667
15.8333   1.667
* code 1203 - profile 3
    7    2    3    4
0.0000    1.667
0.5833    1.667
5.5833    0.750
7.4067    0.750
9.2300    0.750
14.2300   1.667
14.8133   1.667
* code 1203 - profile 4
    5    2    3    4
0.0000    1.667
0.5833    1.667
3.0833    1.208
5.5833    0.750
6.8533    0.750
* code 1203 - profile 5
    7    2    3    4
0.0000    1.458
0.5833    1.458
1.5833    0.458
7.9167    0.458
14.2500   0.458
15.2500   1.458
15.8333   1.458
* code 1203 - profile 6
    5    2    3    4
0.0000    1.167
```

```
0.8334    1.167
3.7709    1.167
6.7084    1.167
7.9375    1.167
* code 1204 - assembling boxgirder
    1    2    1
    2    4    2
    4    6    3
    6    8    2
    8   10    4
    3    5    5
    7    9    5
    2    3    6
    4    5    6
    6    7    6
    8    9    6
* code 1205 control code
    1    2   13    1    1    0    4   14     1.0       1.0
* code 1206 wheels/axle
       0.0
       1.5
       6.0
       7.5 0.833
* code 1207 definition axles
0.00      13.00
14.50     25.00
19.00     25.00
23.50     25.00
50.50     23.50
54.67     23.50
58.83     23.50
102.83    23.50
107.33    28.00
111.83    28.00
116.33    28.00
132.17    28.00
136.67    28.00
141.17    28.00
* code 1208 - accuracy
0.00001   0.00001   0.00001   .00001    .00001
* code 1209 number sections
   45
   1A   1B   1C   1R   2L   2A   2B   2C   2R   3L   3A   3B   3C   3R
   4L   4A   4B   4C   4R   5L   5A   5B   5C
   6A   6B   6C   7A   7B   7C   8L   8A   8B   8C   9L   9A   9B   9C
  10L  10A  10B  10C  11L  11A  11B  11C
* code 1210 - density conrete
0.156
* code 1211 - extra forces selfweight

* code 1212 - surcharge
1.603
* code 1213 - Prestressing Layout - NONE
```

```
* start ; column 11-30 can be used to have your own text on the top of each page
*   5   10   15   20   25   30   35   40   45   50   55   60   65   70   75   80
*   V    V    V    V    V    V    V    V    V    V    V    V    V    V    V    V
00001  1 1     VEH: S4 - SUPER LOAD -19 AXLES- SINGLE TRUCK
* code 1001
Cline Avenue - Load Rating - Double Box - 4 Webs - 64.125' Wide
* code 1002
    2         1
* code 1003
*   5   10   15   20   25   30   35   40   45   50   55   60   65   70   75   80
*   V    V    V    V    V    V    V    V    V    V    V    V    V    V    V    V
250.0     182.0     64.1250   1.0       1.0       1.3
* code 1004
    1    0    2
* code 1005
  305    1
* code 1005a
* location traffic lanes
7.667
* maximum and minimum truck
6.667     57.458    10.000
* code 1007, linear loads
0.7350    0.441
63.39     0.441
* code 1201
   10    6    5    2    4
* code 1202 coordinates
0.0000    0.0
10.7917   0.0
10.7917   -7.9375
26.6250   0.0
26.6250   -7.9375
41.4383   0.0
41.4383   -7.9375
57.2717   0.0
57.2717   -7.9375
64.1250   0.0
* code 1203 - profile 1
    5    2    3    4
0.0000    0.750
5.2083    0.750
7.7083    1.208
10.2083   1.667
10.7917   1.667
* code 1203 - profile 2
    7    2    3    4
0.0000    1.667
0.5833    1.667
5.5833    0.750
7.9167    0.750
10.2500   0.750
15.2500   1.667
15.8333   1.667
* code 1203 - profile 3
    7    2    3    4
0.0000    1.667
0.5833    1.667
5.5833    0.750
7.4067    0.750
9.2300    0.750
14.2300   1.667
14.8133   1.667
* code 1203 - profile 4
    5    2    3    4
0.0000    1.667
0.5833    1.667
3.0833    1.208
5.5833    0.750
6.8533    0.750
* code 1203 - profile 5
    7    2    3    4
0.0000    1.458
0.5833    1.458
1.5833    0.458
7.9167    0.458
14.2500   0.458
15.2500   1.458
15.8333   1.458
* code 1203 - profile 6
    5    2    3    4
0.0000    1.167
```

1_III_A_S4_EL.txt 9/11/2009

```
0.8334    1.167
3.7709    1.167
6.7084    1.167
7.9375    1.167
* code 1204 - assembling boxgirder
    1    2    1
    2    4    2
    4    6    3
    6    8    2
    8   10    4
    3    5    5
    7    9    5
    2    3    6
    4    5    6
    6    7    6
    8    9    6
* code 1205 control code
    1    2   13    1    1    0    4   19     1.0       1.0
* code 1206 wheels/axle
       0.0
       1.5
       6.0
       7.5 0.833
* code 1207 definition axles
0.00      13.00
13.50     16.48
17.83     16.48
31.33     16.48
35.42     15.99
39.50     15.99
45.50     15.99
49.58     16.37
53.67     16.37
103.58    16.37
107.67    16.64
114.17    16.64
118.25    15.15
122.33    15.15
126.42    15.15
135.92    15.15
140.00    17.20
144.08    17.20
148.17    17.20
* code 1208 - accuracy
0.00001   0.00001   0.00001   .00001    .00001
* code 1209 number sections
   45
   1A   1B   1C   1R   2L   2A   2B   2C   2R   3L   3A   3B   3C   3R
   4L   4A   4B   4C   4R   5L   5A   5B   5C
   6A   6B   6C   7A   7B   7C   8L   8A   8B   8C   9L   9A   9B   9C
  10L  10A  10B  10C  11L  11A  11B  11C
* code 1210 - density conrete
0.156
* code 1211 - extra forces selfweight

* code 1212 - surcharge
1.603
* code 1213 - Prestressing Layout - NONE
```

```
* start ; column 11-30 can be used to have your own text on the top of each page
*   5   10   15   20   25   30   35   40   45   50   55   60   65   70   75   80
*   V    V    V    V    V    V    V    V    V    V    V    V    V    V    V    V
00001  1 1     VEH: S5 - SUPERLOAD - 19 AXLE- SINGLE TRUCK
* code 1001
Cline Avenue - Load Rating - Double Box - 4 Webs - 64.125' Wide
* code 1002
    2         1
* code 1003
*   5   10   15   20   25   30   35   40   45   50   55   60   65   70   75   80
*   V    V    V    V    V    V    V    V    V    V    V    V    V    V    V    V
250.0     182.0     64.1250   1.0       1.0       1.3
* code 1004
    1    0    2
* code 1005
  480    1
* code 1005a
* location traffic lanes
7.667
* maximum and minimum truck
6.667     57.458    10.000
* code 1007, linear loads
0.7350    0.441
63.39     0.441
* code 1201
   10    6    5    2    4
* code 1202 coordinates
0.0000    0.0
10.7917   0.0
10.7917   -7.9375
26.6250   0.0
26.6250   -7.9375
41.4383   0.0
41.4383   -7.9375
57.2717   0.0
57.2717   -7.9375
64.1250   0.0
* code 1203 - profile 1
    5    2    3    4
0.0000    0.750
5.2083    0.750
7.7083    1.208
10.2083   1.667
10.7917   1.667
* code 1203 - profile 2
    7    2    3    4
0.0000    1.667
0.5833    1.667
5.5833    0.750
7.9167    0.750
10.2500   0.750
15.2500   1.667
15.8333   1.667
* code 1203 - profile 3
    7    2    3    4
0.0000    1.667
0.5833    1.667
5.5833    0.750
7.4067    0.750
9.2300    0.750
14.2300   1.667
14.8133   1.667
* code 1203 - profile 4
    5    2    3    4
0.0000    1.667
0.5833    1.667
3.0833    1.208
5.5833    0.750
6.8533    0.750
* code 1203 - profile 5
    7    2    3    4
0.0000    1.458
0.5833    1.458
1.5833    0.458
7.9167    0.458
14.2500   0.458
15.2500   1.458
15.8333   1.458
* code 1203 - profile 6
    5    2    3    4
0.0000    1.167
```

1_III_A_S5_EL.txt 9/11/2009

```
0.8334    1.167
3.7709    1.167
6.7084    1.167
7.9375    1.167
* code 1204 - assembling boxgirder
    1    2    1
    2    4    2
    4    6    3
    6    8    2
    8   10    4
    3    5    5
    7    9    5
    2    3    6
    4    5    6
    6    7    6
    8    9    6
* code 1205 control code
    1    2   13    1    1    0    4   19     1.0       1.0
* code 1206 wheels/axle
       0.0
       1.5
       6.0
       7.5 0.833
* code 1207 definition axles
0.00      12.88
12.50     25.95
17.50     25.95
31.58     25.95
36.58     25.95
41.58     25.95
55.67     25.95
60.67     25.95
65.67     25.95
115.67    25.95
120.67    25.95
125.67    25.95
139.75    25.95
144.75    25.95
149.75    25.95
163.83    25.95
168.83    25.95
173.83    25.95
178.83    25.95
* code 1208 - accuracy
0.00001   0.00001   0.00001   .00001    .00001
* code 1209 number sections
   45
   1A   1B   1C   1R   2L   2A   2B   2C   2R   3L   3A   3B   3C   3R
   4L   4A   4B   4C   4R   5L   5A   5B   5C
   6A   6B   6C   7A   7B   7C   8L   8A   8B   8C   9L   9A   9B   9C
  10L  10A  10B  10C  11L  11A  11B  11C
* code 1210 - density conrete
0.156
* code 1211 - extra forces selfweight

* code 1212 - surcharge
1.603
* code 1213 - Prestressing Layout - NONE
```

```
* start ; column 11-30 can be used to have your own text on the top of each page
00001    0    0
* code 1001
Cline Avenue - Load Rating - Double Box - 4 Webs - 64.125' Wide
* code 1002
    2         1
* code 1003
*   5   10   15   20   25   30   35   40   45   50   55   60   65   70   75   80
*   V    V    V    V    V    V    V    V    V    V    V    V    V    V    V    V
250.0     182.0     64.1250   1.0       1.0       1.3
* code 1004
    2    0    2
* code 1005
   72
* code 1005a
* location traffic lanes
7.667     19.667
* maximum and minimum truck
6.667     57.458    10.000
* code 1007, linear loads
0.7350    0.441
63.39     0.441
* code 1201
   10    6    5    2    4
* code 1202 coordinates
0.0000    0.0
10.7917   0.0
10.7917   -7.9375
26.6250   0.0
26.6250   -7.9375
41.4383   0.0
41.4383   -7.9375
57.2717   0.0
57.2717   -7.9375
64.1250   0.0
* code 1203 - profile 1
    5    2    3    4
0.0000    0.750
5.2083    0.750
7.7083    1.208
10.2083   1.667
10.7917   1.667
* code 1203 - profile 2
    7    2    3    4
0.0000    1.667
0.5833    1.667
5.5833    0.750
7.9167    0.750
10.2500   0.750
15.2500   1.667
15.8333   1.667
* code 1203 - profile 3
    7    2    3    4
0.0000    1.667
0.5833    1.667
5.5833    0.750
7.4067    0.750
9.2300    0.750
14.2300   1.667
14.8133   1.667
* code 1203 - profile 4
    5    2    3    4
0.0000    1.667
0.5833    1.667
3.0833    1.208
5.5833    0.750
6.8533    0.750
* code 1203 - profile 5
    7    2    3    4
0.0000    1.458
0.5833    1.458
1.5833    0.458
7.9167    0.458
14.2500   0.458
15.2500   1.458
15.8333   1.458
* code 1203 - profile 6
    5    2    3    4
0.0000    1.167
0.8334    1.167
3.7709    1.167
```

```
6.7084    1.167
7.9375    1.167
* code 1204 - assembling boxgirder
    1    2    1
    2    4    2
    4    6    3
    6    8    2
    8   10    4
    3    5    5
    7    9    5
    2    3    6
    4    5    6
    6    7    6
    8    9    6
* code 1205 control code
    1    2   13    1    1    0    4    3     1.0       1.0
* code 1206 wheels/axle
       0.0
       1.5
       6.0
       7.5 0.833
* code 1207 definition axles
0.0       0.1
14.0      0.4
28.0      0.4
* code 1208 - accuracy
0.00001   0.00001   0.00001   .00001    .00001
* code 1209 number sections
   45
   1A   1B   1C   1R   2L   2A   2B   2C   2R   3L   3A   3B   3C   3R
   4L   4A   4B   4C   4R   5L   5A   5B   5C
   6A   6B   6C   7A   7B   7C   8L   8A   8B   8C   9L   9A   9B   9C
  10L  10A  10B  10C  11L  11A  11B  11C
* code 1210 - density conrete
0.156
* code 1211 - extra forces selfweight

* code 1212 - surcharge
1.603
* code 1213 - Prestressing Layout - NONE
•
```

```
* start ; column 11-30 can be used to have your own text on the top of each page
*   5   10   15   20   25   30   35   40   45   50   55   60   65   70   75   80
*   V    V    V    V    V    V    V    V    V    V    V    V    V    V    V    V
00001  1 1     VEH: HL93- TANDEM
* code 1001
Cline Avenue - Load Rating - Double Box - 4 Webs - 64.125' Wide
* code 1002
    2         1
* code 1003
*   5   10   15   20   25   30   35   40   45   50   55   60   65   70   75   80
*   V    V    V    V    V    V    V    V    V    V    V    V    V    V    V    V
250.0     182.0     64.1250   1.0       1.0       1.3
* code 1004
    2    0    2
* code 1005
   50
* code 1005a
* location traffic lanes
7.667     19.667
* maximum and minimum truck
6.667     57.458    10.000
* code 1007, linear loads
0.7350    0.441
63.39     0.441
* code 1201
   10    6    5    2    4
* code 1202 coordinates
0.0000    0.0
10.7917   0.0
10.7917   -7.9375
26.6250   0.0
26.6250   -7.9375
41.4383   0.0
41.4383   -7.9375
57.2717   0.0
57.2717   -7.9375
64.1250   0.0
* code 1203 - profile 1
    5    2    3    4
0.0000    0.750
5.2083    0.750
7.7083    1.208
10.2083   1.667
10.7917   1.667
* code 1203 - profile 2
    7    2    3    4
0.0000    1.667
0.5833    1.667
5.5833    0.750
7.9167    0.750
10.2500   0.750
15.2500   1.667
15.8333   1.667
* code 1203 - profile 3
    7    2    3    4
0.0000    1.667
0.5833    1.667
5.5833    0.750
7.4067    0.750
9.2300    0.750
14.2300   1.667
14.8133   1.667
* code 1203 - profile 4
    5    2    3    4
0.0000    1.667
0.5833    1.667
3.0833    1.208
5.5833    0.750
6.8533    0.750
* code 1203 - profile 5
    7    2    3    4
0.0000    1.458
0.5833    1.458
1.5833    0.458
7.9167    0.458
14.2500   0.458
15.2500   1.458
15.8333   1.458
* code 1203 - profile 6
    5    2    3    4
0.0000    1.167
```

```
0.8334    1.167
3.7709    1.167
6.7084    1.167
7.9375    1.167
* code 1204 - assembling boxgirder
    1    2    1
    2    4    2
    4    6    3
    6    8    2
    8   10    4
    3    5    5
    7    9    5
    2    3    6
    4    5    6
    6    7    6
    8    9    6
* code 1205 control code
    1    2   13    1    1    0    4    2     1.0       1.0
* code 1206 wheels/axle
       0.0
       1.5
       6.0
       7.5 0.833
* code 1207 definition axles
0.0       0.5
4.0       0.5
* code 1208 - accuracy
0.00001   0.00001   0.00001   .00001    .00001
* code 1209 number sections
   45
   1A   1B   1C   1R   2L   2A   2B   2C   2R   3L   3A   3B   3C   3R
   4L   4A   4B   4C   4R   5L   5A   5B   5C
   6A   6B   6C   7A   7B   7C   8L   8A   8B   8C   9L   9A   9B   9C
  10L  10A  10B  10C  11L  11A  11B  11C
* code 1210 - density conrete
0.156
* code 1211 - extra forces selfweight

* code 1212 - surcharge
1.603
* code 1213 - Prestressing Layout - NONE
```

```
* start ; column 11-30 can be used to have your own text on the top of each page
*   5   10   15   20   25   30   35   40   45   50   55   60   65   70   75   80
*   V    V    V    V    V    V    V    V    V    V    V    V    V    V    V    V
00001  1 1     VEH: R1 - TOLL ROAD LOADING No. 1
* code 1001
Cline Avenue - Load Rating - Double Box - 4 Webs - 64.125' Wide
* code 1002
    2         1
* code 1003
*   5   10   15   20   25   30   35   40   45   50   55   60   65   70   75   80
*   V    V    V    V    V    V    V    V    V    V    V    V    V    V    V    V
250.0     182.0     64.1250   1.0       1.0       1.3
* code 1004
    2    0    2
* code 1005
   90
* code 1005a
* location traffic lanes
7.667     19.667
* maximum and minimum truck
6.667     57.458    10.000
* code 1007, linear loads
0.7350    0.441
63.39     0.441
* code 1201
   10    6    5    2    4
* code 1202 coordinates
0.0000    0.0
10.7917   0.0
10.7917   -7.9375
26.6250   0.0
26.6250   -7.9375
41.4383   0.0
41.4383   -7.9375
57.2717   0.0
57.2717   -7.9375
64.1250   0.0
* code 1203 - profile 1
    5    2    3    4
0.0000    0.750
5.2083    0.750
7.7083    1.208
10.2083   1.667
10.7917   1.667
* code 1203 - profile 2
    7    2    3    4
0.0000    1.667
0.5833    1.667
5.5833    0.750
7.9167    0.750
10.2500   0.750
15.2500   1.667
15.8333   1.667
* code 1203 - profile 3
    7    2    3    4
0.0000    1.667
0.5833    1.667
5.5833    0.750
7.4067    0.750
9.2300    0.750
14.2300   1.667
14.8133   1.667
* code 1203 - profile 4
    5    2    3    4
0.0000    1.667
0.5833    1.667
3.0833    1.208
5.5833    0.750
6.8533    0.750
* code 1203 - profile 5
    7    2    3    4
0.0000    1.458
0.5833    1.458
1.5833    0.458
7.9167    0.458
14.2500   0.458
15.2500   1.458
15.8333   1.458
* code 1203 - profile 6
    5    2    3    4
0.0000    1.167
```

```
0.8334    1.167
3.7709    1.167
6.7084    1.167
7.9375    1.167
* code 1204 - assembling boxgirder
    1    2    1
    2    4    2
    4    6    3
    6    8    2
    8   10    4
    3    5    5
    7    9    5
    2    3    6
    4    5    6
    6    7    6
    8    9    6
* code 1205 control code
    1    2   13    1    1    0    4    5     1.0       1.0
* code 1206 wheels/axle
       0.0
       1.5
       6.0
       7.5 0.833
* code 1207 definition axles
0.00      18.00
10.00     18.00
14.00     18.00
24.00     18.00
28.00     18.00
* code 1208 - accuracy
0.00001   0.00001   0.00001   .00001    .00001
* code 1209 number sections
   45
   1A   1B   1C   1R   2L   2A   2B   2C   2R   3L   3A   3B   3C   3R
   4L   4A   4B   4C   4R   5L   5A   5B   5C
   6A   6B   6C   7A   7B   7C   8L   8A   8B   8C   9L   9A   9B   9C
  10L  10A  10B  10C  11L  11A  11B  11C
* code 1210 - density conrete
0.156
* code 1211 - extra forces selfweight

* code 1212 - surcharge
1.603
* code 1213 - Prestressing Layout - NONE
•
```

```
* start ; column 11-30 can be used to have your own text on the top of each page
*   5   10   15   20   25   30   35   40   45   50   55   60   65   70   75   80
*   V    V    V    V    V    V    V    V    V    V    V    V    V    V    V    V
00001  1 1     VEH: R2 - TOLL ROAD LOADING No. 2
* code 1001
Cline Avenue - Load Rating - Double Box - 4 Webs - 64.125' Wide
* code 1002
    2         1
* code 1003
*   5   10   15   20   25   30   35   40   45   50   55   60   65   70   75   80
*   V    V    V    V    V    V    V    V    V    V    V    V    V    V    V    V
250.0     182.0     64.1250   1.0       1.0       1.3
* code 1004
    2    0    2
* code 1005
   90
* code 1005a
* location traffic lanes
7.667     19.667
* maximum and minimum truck
6.667     57.458    10.000
* code 1007, linear loads
0.7350    0.441
63.39     0.441
* code 1201
   10    6    5    2    4
* code 1202 coordinates
0.0000    0.0
10.7917   0.0
10.7917   -7.9375
26.6250   0.0
26.6250   -7.9375
41.4383   0.0
41.4383   -7.9375
57.2717   0.0
57.2717   -7.9375
64.1250   0.0
* code 1203 - profile 1
    5    2    3    4
0.0000    0.750
5.2083    0.750
7.7083    1.208
10.2083   1.667
10.7917   1.667
* code 1203 - profile 2
    7    2    3    4
0.0000    1.667
0.5833    1.667
5.5833    0.750
7.9167    0.750
10.2500   0.750
15.2500   1.667
15.8333   1.667
* code 1203 - profile 3
    7    2    3    4
0.0000    1.667
0.5833    1.667
5.5833    0.750
7.4067    0.750
9.2300    0.750
14.2300   1.667
14.8133   1.667
* code 1203 - profile 4
    5    2    3    4
0.0000    1.667
0.5833    1.667
3.0833    1.208
5.5833    0.750
6.8533    0.750
* code 1203 - profile 5
    7    2    3    4
0.0000    1.458
0.5833    1.458
1.5833    0.458
7.9167    0.458
14.2500   0.458
15.2500   1.458
15.8333   1.458
* code 1203 - profile 6
    5    2    3    4
0.0000    1.167
```

```
0.8334    1.167
3.7709    1.167
6.7084    1.167
7.9375    1.167
* code 1204 - assembling boxgirder
    1    2    1
    2    4    2
    4    6    3
    6    8    2
    8   10    4
    3    5    5
    7    9    5
    2    3    6
    4    5    6
    6    7    6
    8    9    6
* code 1205 control code
    1    2   13    1    1    0    4    4     1.0       1.0
* code 1206 wheels/axle
       0.0
       1.5
       6.0
       7.5 0.833
* code 1207 definition axles
0.00      22.50
14.00     22.50
23.00     22.50
37.00     22.50
* code 1208 - accuracy
0.00001   0.00001   0.00001   .00001    .00001
* code 1209 number sections
   45
   1A   1B   1C   1R   2L   2A   2B   2C   2R   3L   3A   3B   3C   3R
   4L   4A   4B   4C   4R   5L   5A   5B   5C
   6A   6B   6C   7A   7B   7C   8L   8A   8B   8C   9L   9A   9B   9C
  10L  10A  10B  10C  11L  11A  11B  11C
* code 1210 - density conrete
0.156
* code 1211 - extra forces selfweight

* code 1212 - surcharge
1.603
* code 1213 - Prestressing Layout - NONE
```

```
* start ; column 11-30 can be used to have your own text on the top of each page
*   5   10   15   20   25   30   35   40   45   50   55   60   65   70   75   80
*   V    V    V    V    V    V    V    V    V    V    V    V    V    V    V    V
00001  1 1     VEH: R3 - TOLL ROAD LOADING No. 3
* code 1001
Cline Avenue - Load Rating - Double Box - 4 Webs - 64.125' Wide
* code 1002
    2         1
* code 1003
*   5   10   15   20   25   30   35   40   45   50   55   60   65   70   75   80
*   V    V    V    V    V    V    V    V    V    V    V    V    V    V    V    V
250.0     182.0     64.1250   1.0       1.0       1.3
* code 1004
    2    0    2
* code 1005
  126
* code 1005a
* location traffic lanes
7.667     19.667
* maximum and minimum truck
6.667     57.458    10.000
* code 1007, linear loads
0.7350    0.441
63.39     0.441
* code 1201
   10    6    5    2    4
* code 1202 coordinates
0.0000    0.0
10.7917   0.0
10.7917   -7.9375
26.6250   0.0
26.6250   -7.9375
41.4383   0.0
41.4383   -7.9375
57.2717   0.0
57.2717   -7.9375
64.1250   0.0
* code 1203 - profile 1
    5    2    3    4
0.0000    0.750
5.2083    0.750
7.7083    1.208
10.2083   1.667
10.7917   1.667
* code 1203 - profile 2
    7    2    3    4
0.0000    1.667
0.5833    1.667
5.5833    0.750
7.9167    0.750
10.2500   0.750
15.2500   1.667
15.8333   1.667
* code 1203 - profile 3
    7    2    3    4
0.0000    1.667
0.5833    1.667
5.5833    0.750
7.4067    0.750
9.2300    0.750
14.2300   1.667
14.8133   1.667
* code 1203 - profile 4
    5    2    3    4
0.0000    1.667
0.5833    1.667
3.0833    1.208
5.5833    0.750
6.8533    0.750
* code 1203 - profile 5
    7    2    3    4
0.0000    1.458
0.5833    1.458
1.5833    0.458
7.9167    0.458
14.2500   0.458
15.2500   1.458
15.8333   1.458
* code 1203 - profile 6
    5    2    3    4
0.0000    1.167
```

```
0.8334    1.167
3.7709    1.167
6.7084    1.167
7.9375    1.167
* code 1204 - assembling boxgirder
    1    2    1
    2    4    2
    4    6    3
    6    8    2
    8   10    4
    3    5    5
    7    9    5
    2    3    6
    4    5    6
    6    7    6
    8    9    6
* code 1205 control code
    1    2   13    1    1    0    4    7     1.0       1.0
* code 1206 wheels/axle
       0.0
       1.5
       6.0
       7.5 0.833
* code 1207 definition axles
0.00      18.00
10.00     18.00
14.00     18.00
40.00     18.00
44.00     18.00
56.00     18.00
76.00     18.00
* code 1208 - accuracy
0.00001   0.00001   0.00001   .00001    .00001
* code 1209 number sections
   45
   1A   1B   1C   1R   2L   2A   2B   2C   2R   3L   3A   3B   3C   3R
   4L   4A   4B   4C   4R   5L   5A   5B   5C
   6A   6B   6C   7A   7B   7C   8L   8A   8B   8C   9L   9A   9B   9C
  10L  10A  10B  10C  11L  11A  11B  11C
* code 1210 - density conrete
0.156
* code 1211 - extra forces selfweight

* code 1212 - surcharge
1.603
* code 1213 - Prestressing Layout - NONE
•
```

```
* start ; column 11-30 can be used to have your own text on the top of each page
*   5   10   15   20   25   30   35   40   45   50   55   60   65   70   75   80
*   V    V    V    V    V    V    V    V    V    V    V    V    V    V    V    V
00001  1 1     VEH: R4 - MICHIGAN TRUCK TRAIN No.5
* code 1001
Cline Avenue - Load Rating - Double Box - 4 Webs - 64.125' Wide
* code 1002
    2         1
* code 1003
*   5   10   15   20   25   30   35   40   45   50   55   60   65   70   75   80
*   V    V    V    V    V    V    V    V    V    V    V    V    V    V    V    V
250.0     182.0     64.1250   1.0       1.0       1.3
* code 1004
    2    0    2
* code 1005
  134
* code 1005a
* location traffic lanes
7.667     19.667
* maximum and minimum truck
6.667     57.458    10.000
* code 1007, linear loads
0.7350    0.441
63.39     0.441
* code 1201
   10    6    5    2    4
* code 1202 coordinates
0.0000    0.0
10.7917   0.0
10.7917   -7.9375
26.6250   0.0
26.6250   -7.9375
41.4383   0.0
41.4383   -7.9375
57.2717   0.0
57.2717   -7.9375
64.1250   0.0
* code 1203 - profile 1
    5    2    3    4
0.0000    0.750
5.2083    0.750
7.7083    1.208
10.2083   1.667
10.7917   1.667
* code 1203 - profile 2
    7    2    3    4
0.0000    1.667
0.5833    1.667
5.5833    0.750
7.9167    0.750
10.2500   0.750
15.2500   1.667
15.8333   1.667
* code 1203 - profile 3
    7    2    3    4
0.0000    1.667
0.5833    1.667
5.5833    0.750
7.4067    0.750
9.2300    0.750
14.2300   1.667
14.8133   1.667
* code 1203 - profile 4
    5    2    3    4
0.0000    1.667
0.5833    1.667
3.0833    1.208
5.5833    0.750
6.8533    0.750
* code 1203 - profile 5
    7    2    3    4
0.0000    1.458
0.5833    1.458
1.5833    0.458
7.9167    0.458
14.2500   0.458
15.2500   1.458
15.8333   1.458
* code 1203 - profile 6
    5    2    3    4
0.0000    1.167
```

```
0.8334    1.167
3.7709    1.167
6.7084    1.167
7.9375    1.167
* code 1204 - assembling boxgirder
    1    2    1
    2    4    2
    4    6    3
    6    8    2
    8   10    4
    3    5    5
    7    9    5
    2    3    6
    4    5    6
    6    7    6
    8    9    6
* code 1205 control code
    1    2   13    1    1    0    4    8     1.0       1.0
* code 1206 wheels/axle
       0.0
       1.5
       6.0
       7.5 0.833
* code 1207 definition axles
0.00      12.00
9.00      16.00
12.50     16.00
21.50     18.00
30.50     18.00
39.50     18.00
48.50     18.00
57.50     18.00
* code 1208 - accuracy
0.00001   0.00001   0.00001   .00001    .00001
* code 1209 number sections
   45
   1A   1B   1C   1R   2L   2A   2B   2C   2R   3L   3A   3B   3C   3R
   4L   4A   4B   4C   4R   5L   5A   5B   5C
   6A   6B   6C   7A   7B   7C   8L   8A   8B   8C   9L   9A   9B   9C
  10L  10A  10B  10C  11L  11A  11B  11C
* code 1210 - density conrete
0.156
* code 1211 - extra forces selfweight

* code 1212 - surcharge
1.603
* code 1213 - Prestressing Layout - NONE
```

```
* start ; column 11-30 can be used to have your own text on the top of each page
*   5   10   15   20   25   30   35   40   45   50   55   60   65   70   75   80
*   V    V    V    V    V    V    V    V    V    V    V    V    V    V    V    V
00001  1 1     VEH: R5 - MICHIGAN TRUCK TRAIN No. 8
* code 1001
Cline Avenue - Load Rating - Double Box - 4 Webs - 64.125' Wide
* code 1002
    2         1
* code 1003
*   5   10   15   20   25   30   35   40   45   50   55   60   65   70   75   80
*   V    V    V    V    V    V    V    V    V    V    V    V    V    V    V    V
250.0     182.0     64.1250   1.0       1.0       1.3
* code 1004
    2    0    2
* code 1005
* Vehicle weight is 134.2 Kips, rounded to 135
  135
* code 1005a
* location traffic lanes
7.667     19.667
* maximum and minimum truck
6.667     57.458    10.000
* code 1007, linear loads
0.7350    0.441
63.39     0.441
* code 1201
   10    6    5    2    4
* code 1202 coordinates
0.0000    0.0
10.7917   0.0
10.7917   -7.9375
26.6250   0.0
26.6250   -7.9375
41.4383   0.0
41.4383   -7.9375
57.2717   0.0
57.2717   -7.9375
64.1250   0.0
* code 1203 - profile 1
    5    2    3    4
0.0000    0.750
5.2083    0.750
7.7083    1.208
10.2083   1.667
10.7917   1.667
* code 1203 - profile 2
    7    2    3    4
0.0000    1.667
0.5833    1.667
5.5833    0.750
7.9167    0.750
10.2500   0.750
15.2500   1.667
15.8333   1.667
* code 1203 - profile 3
    7    2    3    4
0.0000    1.667
0.5833    1.667
5.5833    0.750
7.4067    0.750
9.2300    0.750
14.2300   1.667
14.8133   1.667
* code 1203 - profile 4
    5    2    3    4
0.0000    1.667
0.5833    1.667
3.0833    1.208
5.5833    0.750
6.8533    0.750
* code 1203 - profile 5
    7    2    3    4
0.0000    1.458
0.5833    1.458
1.5833    0.458
7.9167    0.458
14.2500   0.458
15.2500   1.458
15.8333   1.458
* code 1203 - profile 6
    5    2    3    4
```

```
0.0000    1.167
0.8334    1.167
3.7709    1.167
6.7084    1.167
7.9375    1.167
* code 1204 - assembling boxgirder
    1    2    1
    2    4    2
    4    6    3
    6    8    2
    8   10    4
    3    5    5
    7    9    5
    2    3    6
    4    5    6
    6    7    6
    8    9    6
* code 1205 control code
    1    2   13    1    1    0    4   11     1.0       1.0
* code 1206 wheels/axle
       0.0
       1.5
       6.0
       7.5 0.833
* code 1207 definition axles
0.00      12.00
9.00      13.40
12.50     13.40
21.50     10.90
25.00     10.90
28.50     10.90
32.00     10.90
35.50     10.90
39.00     10.90
48.00     15.00
57.00     15.00
* code 1208 - accuracy
0.00001   0.00001   0.00001   .00001    .00001
* code 1209 number sections
   45
   1A   1B   1C   1R   2L   2A   2B   2C   2R   3L   3A   3B   3C   3R
   4L   4A   4B   4C   4R   5L   5A   5B   5C
   6A   6B   6C   7A   7B   7C   8L   8A   8B   8C   9L   9A   9B   9C
  10L  10A  10B  10C  11L  11A  11B  11C
* code 1210 - density conrete
0.156
* code 1211 - extra forces selfweight

* code 1212 - surcharge
1.603
* code 1213 - Prestressing Layout - NONE
```

```
* start ; column 11-30 can be used to have your own text on the top of each page
*   5   10   15   20   25   30   35   40   45   50   55   60   65   70   75   80
*   V    V    V    V    V    V    V    V    V    V    V    V    V    V    V    V
00001  1 1     VEH: S1 - SPECIAL TRUCK 11 AXLE
* code 1001
Cline Avenue - Load Rating - Double Box - 4 Webs - 64.125' Wide
* code 1002
    2         1
* code 1003
*   5   10   15   20   25   30   35   40   45   50   55   60   65   70   75   80
*   V    V    V    V    V    V    V    V    V    V    V    V    V    V    V    V
250.0     182.0     64.1250   1.0       1.0       1.3
* code 1004
    2    0    2
* code 1005
  258
* code 1005a
* location traffic lanes
7.667     19.667
* maximum and minimum truck
6.667     57.458    10.000
* code 1007, linear loads
0.7350    0.441
63.39     0.441
* code 1201
   10    6    5    2    4
* code 1202 coordinates
0.0000    0.0
10.7917   0.0
10.7917   -7.9375
26.6250   0.0
26.6250   -7.9375
41.4383   0.0
41.4383   -7.9375
57.2717   0.0
57.2717   -7.9375
64.1250   0.0
* code 1203 - profile 1
    5    2    3    4
0.0000    0.750
5.2083    0.750
7.7083    1.208
10.2083   1.667
10.7917   1.667
* code 1203 - profile 2
    7    2    3    4
0.0000    1.667
0.5833    1.667
5.5833    0.750
7.9167    0.750
10.2500   0.750
15.2500   1.667
15.8333   1.667
* code 1203 - profile 3
    7    2    3    4
0.0000    1.667
0.5833    1.667
5.5833    0.750
7.4067    0.750
9.2300    0.750
14.2300   1.667
14.8133   1.667
* code 1203 - profile 4
    5    2    3    4
0.0000    1.667
0.5833    1.667
3.0833    1.208
5.5833    0.750
6.8533    0.750
* code 1203 - profile 5
    7    2    3    4
0.0000    1.458
0.5833    1.458
1.5833    0.458
7.9167    0.458
14.2500   0.458
15.2500   1.458
15.8333   1.458
* code 1203 - profile 6
    5    2    3    4
0.0000    1.167
```

```
0.8334    1.167
3.7709    1.167
6.7084    1.167
7.9375    1.167
* code 1204 - assembling boxgirder
    1    2    1
    2    4    2
    4    6    3
    6    8    2
    8   10    4
    3    5    5
    7    9    5
    2    3    6
    4    5    6
    6    7    6
    8    9    6
* code 1205 control code
    1    2   13    1    1    0    4   11     1.0       1.0
* code 1206 wheels/axle
       0.0
       1.5
       6.0
       7.5 0.833
* code 1207 definition axles
0.00      12.00
11.50     24.60
16.67     24.60
21.67     24.60
34.83     24.60
39.33     24.60
89.92     24.60
94.42     24.60
98.92     24.60
112.50     24.60
117.00     24.60
* code 1208 - accuracy
0.00001   0.00001   0.00001   .00001    .00001
* code 1209 number sections
   45
   1A   1B   1C   1R   2L   2A   2B   2C   2R   3L   3A   3B   3C   3R
   4L   4A   4B   4C   4R   5L   5A   5B   5C
   6A   6B   6C   7A   7B   7C   8L   8A   8B   8C   9L   9A   9B   9C
  10L  10A  10B  10C  11L  11A  11B  11C
* code 1210 - density conrete
0.156
* code 1211 - extra forces selfweight

* code 1212 - surcharge
1.603
* code 1213 - Prestressing Layout - NONE
```

```
* start ; column 11-30 can be used to have your own text on the top of each page
*   5   10   15   20   25   30   35   40   45   50   55   60   65   70   75   80
*   V    V    V    V    V    V    V    V    V    V    V    V    V    V    V    V
00001  1 1     VEH: S2 - SPECIAL TRUCK - 13 AXLE
* code 1001
Cline Avenue - Load Rating - Double Box - 4 Webs - 64.125' Wide
* code 1002
    2         1
* code 1003
*   5   10   15   20   25   30   35   40   45   50   55   60   65   70   75   80
*   V    V    V    V    V    V    V    V    V    V    V    V    V    V    V    V
250.0     182.0     64.1250   1.0       1.0       1.3
* code 1004
    2    0    2
* code 1005
  267
* code 1005a
* location traffic lanes
7.667     19.667
* maximum and minimum truck
6.667     57.458    10.000
* code 1007, linear loads
0.7350    0.441
63.39     0.441
* code 1201
   10    6    5    2    4
* code 1202 coordinates
0.0000    0.0
10.7917   0.0
10.7917   -7.9375
26.6250   0.0
26.6250   -7.9375
41.4383   0.0
41.4383   -7.9375
57.2717   0.0
57.2717   -7.9375
64.1250   0.0
* code 1203 - profile 1
    5    2    3    4
0.0000    0.750
5.2083    0.750
7.7083    1.208
10.2083   1.667
10.7917   1.667
* code 1203 - profile 2
    7    2    3    4
0.0000    1.667
0.5833    1.667
5.5833    0.750
7.9167    0.750
10.2500   0.750
15.2500   1.667
15.8333   1.667
* code 1203 - profile 3
    7    2    3    4
0.0000    1.667
0.5833    1.667
5.5833    0.750
7.4067    0.750
9.2300    0.750
14.2300   1.667
14.8133   1.667
* code 1203 - profile 4
    5    2    3    4
0.0000    1.667
0.5833    1.667
3.0833    1.208
5.5833    0.750
6.8533    0.750
* code 1203 - profile 5
    7    2    3    4
0.0000    1.458
0.5833    1.458
1.5833    0.458
7.9167    0.458
14.2500   0.458
15.2500   1.458
15.8333   1.458
* code 1203 - profile 6
    5    2    3    4
0.0000    1.167
```

```
0.8334    1.167
3.7709    1.167
6.7084    1.167
7.9375    1.167
* code 1204 - assembling boxgirder
    1    2    1
    2    4    2
    4    6    3
    6    8    2
    8   10    4
    3    5    5
    7    9    5
    2    3    6
    4    5    6
    6    7    6
    8    9    6
* code 1205 control code
    1    2   13    1    1    0    4   13     1.0       1.0
* code 1206 wheels/axle
       0.0
       1.5
       6.0
       7.5 0.833
* code 1207 definition axles
0.00      15.00
16.50     21.00
21.00     21.00
25.50     21.00
39.50     21.00
44.00     21.00
48.50     21.00
96.50     21.00
101.00    21.00
105.50    21.00
121.00    21.00
125.50    21.00
130.00    21.00
* code 1208 - accuracy
0.00001   0.00001   0.00001   .00001    .00001
* code 1209 number sections
   45
   1A   1B   1C   1R   2L   2A   2B   2C   2R   3L   3A   3B   3C   3R
   4L   4A   4B   4C   4R   5L   5A   5B   5C
   6A   6B   6C   7A   7B   7C   8L   8A   8B   8C   9L   9A   9B   9C
  10L  10A  10B  10C  11L  11A  11B  11C
* code 1210 - density conrete
0.156
* code 1211 - extra forces selfweight

* code 1212 - surcharge
1.603
* code 1213 - Prestressing Layout - NONE
```

```
* start ; column 11-30 can be used to have your own text on the top of each page
*   5   10   15   20   25   30   35   40   45   50   55   60   65   70   75   80
*   V    V    V    V    V    V    V    V    V    V    V    V    V    V    V    V
00001  1 1     VEH: S3 - SPECIAL TRUCK - 14 AXLE
* code 1001
Cline Avenue - Load Rating - Double Box - 4 Webs - 64.125' Wide
* code 1002
    2         1
* code 1003
*   5   10   15   20   25   30   35   40   45   50   55   60   65   70   75   80
*   V    V    V    V    V    V    V    V    V    V    V    V    V    V    V    V
250.0     182.0     64.1250   1.0       1.0       1.3
* code 1004
    2    0    2
* code 1005
  350
* code 1005a
* location traffic lanes
7.667     19.667
* maximum and minimum truck
6.667     57.458    10.000
* code 1007, linear loads
0.7350    0.441
63.39     0.441
* code 1201
   10    6    5    2    4
* code 1202 coordinates
0.0000    0.0
10.7917   0.0
10.7917   -7.9375
26.6250   0.0
26.6250   -7.9375
41.4383   0.0
41.4383   -7.9375
57.2717   0.0
57.2717   -7.9375
64.1250   0.0
* code 1203 - profile 1
    5    2    3    4
0.0000    0.750
5.2083    0.750
7.7083    1.208
10.2083   1.667
10.7917   1.667
* code 1203 - profile 2
    7    2    3    4
0.0000    1.667
0.5833    1.667
5.5833    0.750
7.9167    0.750
10.2500   0.750
15.2500   1.667
15.8333   1.667
* code 1203 - profile 3
    7    2    3    4
0.0000    1.667
0.5833    1.667
5.5833    0.750
7.4067    0.750
9.2300    0.750
14.2300   1.667
14.8133   1.667
* code 1203 - profile 4
    5    2    3    4
0.0000    1.667
0.5833    1.667
3.0833    1.208
5.5833    0.750
6.8533    0.750
* code 1203 - profile 5
    7    2    3    4
0.0000    1.458
0.5833    1.458
1.5833    0.458
7.9167    0.458
14.2500   0.458
15.2500   1.458
15.8333   1.458
* code 1203 - profile 6
    5    2    3    4
0.0000    1.167
```

```
0.8334    1.167
3.7709    1.167
6.7084    1.167
7.9375    1.167
* code 1204 - assembling boxgirder
    1    2    1
    2    4    2
    4    6    3
    6    8    2
    8   10    4
    3    5    5
    7    9    5
    2    3    6
    4    5    6
    6    7    6
    8    9    6
* code 1205 control code
    1    2   13    1    1    0    4   14     1.0       1.0
* code 1206 wheels/axle
       0.0
       1.5
       6.0
       7.5 0.833
* code 1207 definition axles
0.00      13.00
14.50     25.00
19.00     25.00
23.50     25.00
50.50     23.50
54.67     23.50
58.83     23.50
102.83    23.50
107.33    28.00
111.83    28.00
116.33    28.00
132.17    28.00
136.67    28.00
141.17    28.00
* code 1208 - accuracy
0.00001   0.00001   0.00001   .00001    .00001
* code 1209 number sections
   45
   1A   1B   1C   1R   2L   2A   2B   2C   2R   3L   3A   3B   3C   3R
   4L   4A   4B   4C   4R   5L   5A   5B   5C
   6A   6B   6C   7A   7B   7C   8L   8A   8B   8C   9L   9A   9B   9C
  10L  10A  10B  10C  11L  11A  11B  11C
* code 1210 - density conrete
0.156
* code 1211 - extra forces selfweight

* code 1212 - surcharge
1.603
* code 1213 - Prestressing Layout - NONE
•
```

```
* start ; column 11-30 can be used to have your own text on the top of each page
*   5   10   15   20   25   30   35   40   45   50   55   60   65   70   75   80
*   V    V    V    V    V    V    V    V    V    V    V    V    V    V    V    V
00001  1 1     VEH: S4 - SUPER LOAD -19 AXLES
* code 1001
Cline Avenue - Load Rating - Double Box - 4 Webs - 64.125' Wide
* code 1002
    2         1
* code 1003
*   5   10   15   20   25   30   35   40   45   50   55   60   65   70   75   80
*   V    V    V    V    V    V    V    V    V    V    V    V    V    V    V    V
250.0     182.0     64.1250   1.0       1.0       1.3
* code 1004
    2    0    2
* code 1005
  305
* code 1005a
* location traffic lanes
7.667     19.667
* maximum and minimum truck
6.667     57.458    10.000
* code 1007, linear loads
0.7350    0.441
63.39     0.441
* code 1201
   10    6    5    2    4
* code 1202 coordinates
0.0000    0.0
10.7917   0.0
10.7917   -7.9375
26.6250   0.0
26.6250   -7.9375
41.4383   0.0
41.4383   -7.9375
57.2717   0.0
57.2717   -7.9375
64.1250   0.0
* code 1203 - profile 1
    5    2    3    4
0.0000    0.750
5.2083    0.750
7.7083    1.208
10.2083   1.667
10.7917   1.667
* code 1203 - profile 2
    7    2    3    4
0.0000    1.667
0.5833    1.667
5.5833    0.750
7.9167    0.750
10.2500   0.750
15.2500   1.667
15.8333   1.667
* code 1203 - profile 3
    7    2    3    4
0.0000    1.667
0.5833    1.667
5.5833    0.750
7.4067    0.750
9.2300    0.750
14.2300   1.667
14.8133   1.667
* code 1203 - profile 4
    5    2    3    4
0.0000    1.667
0.5833    1.667
3.0833    1.208
5.5833    0.750
6.8533    0.750
* code 1203 - profile 5
    7    2    3    4
0.0000    1.458
0.5833    1.458
1.5833    0.458
7.9167    0.458
14.2500   0.458
15.2500   1.458
15.8333   1.458
* code 1203 - profile 6
    5    2    3    4
0.0000    1.167
```

```
0.8334    1.167
3.7709    1.167
6.7084    1.167
7.9375    1.167
* code 1204 - assembling boxgirder
    1    2    1
    2    4    2
    4    6    3
    6    8    2
    8   10    4
    3    5    5
    7    9    5
    2    3    6
    4    5    6
    6    7    6
    8    9    6
* code 1205 control code
    1    2   13    1    1    0    4   19     1.0       1.0
* code 1206 wheels/axle
       0.0
       1.5
       6.0
       7.5 0.833
* code 1207 definition axles
0.00      13.00
13.50     16.48
17.83     16.48
31.33     16.48
35.42     15.99
39.50     15.99
45.50     15.99
49.58     16.37
53.67     16.37
103.58    16.37
107.67    16.64
114.17    16.64
118.25    15.15
122.33    15.15
126.42    15.15
135.92    15.15
140.00    17.20
144.08    17.20
148.17    17.20
* code 1208 - accuracy
0.00001   0.00001   0.00001   .00001    .00001
* code 1209 number sections
   45
   1A   1B   1C   1R   2L   2A   2B   2C   2R   3L   3A   3B   3C   3R
   4L   4A   4B   4C   4R   5L   5A   5B   5C
   6A   6B   6C   7A   7B   7C   8L   8A   8B   8C   9L   9A   9B   9C
  10L  10A  10B  10C  11L  11A  11B  11C
* code 1210 - density conrete
0.156
* code 1211 - extra forces selfweight

* code 1212 - surcharge
1.603
* code 1213 - Prestressing Layout - NONE
```

```
* start ; column 11-30 can be used to have your own text on the top of each page
*   5   10   15   20   25   30   35   40   45   50   55   60   65   70   75   80
*   V    V    V    V    V    V    V    V    V    V    V    V    V    V    V    V
00001  1 1     VEH: S5 - SUPERLOAD - 19 AXLE
* code 1001
Cline Avenue - Load Rating - Double Box - 4 Webs - 64.125' Wide
* code 1002
    2         1
* code 1003
*   5   10   15   20   25   30   35   40   45   50   55   60   65   70   75   80
*   V    V    V    V    V    V    V    V    V    V    V    V    V    V    V    V
250.0     182.0     64.1250   1.0       1.0       1.3
* code 1004
    2    0    2
* code 1005
  480
* code 1005a
* location traffic lanes
7.667     19.667
* maximum and minimum truck
6.667     57.458    10.000
* code 1007, linear loads
0.7350    0.441
63.39     0.441
* code 1201
   10    6    5    2    4
* code 1202 coordinates
0.0000    0.0
10.7917   0.0
10.7917   -7.9375
26.6250   0.0
26.6250   -7.9375
41.4383   0.0
41.4383   -7.9375
57.2717   0.0
57.2717   -7.9375
64.1250   0.0
* code 1203 - profile 1
    5    2    3    4
0.0000    0.750
5.2083    0.750
7.7083    1.208
10.2083   1.667
10.7917   1.667
* code 1203 - profile 2
    7    2    3    4
0.0000    1.667
0.5833    1.667
5.5833    0.750
7.9167    0.750
10.2500   0.750
15.2500   1.667
15.8333   1.667
* code 1203 - profile 3
    7    2    3    4
0.0000    1.667
0.5833    1.667
5.5833    0.750
7.4067    0.750
9.2300    0.750
14.2300   1.667
14.8133   1.667
* code 1203 - profile 4
    5    2    3    4
0.0000    1.667
0.5833    1.667
3.0833    1.208
5.5833    0.750
6.8533    0.750
* code 1203 - profile 5
    7    2    3    4
0.0000    1.458
0.5833    1.458
1.5833    0.458
7.9167    0.458
14.2500   0.458
15.2500   1.458
15.8333   1.458
* code 1203 - profile 6
    5    2    3    4
0.0000    1.167
```

```
0.8334    1.167
3.7709    1.167
6.7084    1.167
7.9375    1.167
* code 1204 - assembling boxgirder
    1    2    1
    2    4    2
    4    6    3
    6    8    2
    8   10    4
    3    5    5
    7    9    5
    2    3    6
    4    5    6
    6    7    6
    8    9    6
* code 1205 control code
    1    2   13    1    1    0    4   19     1.0       1.0
* code 1206 wheels/axle
       0.0
       1.5
       6.0
       7.5 0.833
* code 1207 definition axles
0.00      12.88
12.50     25.95
17.50     25.95
31.58     25.95
36.58     25.95
41.58     25.95
55.67     25.95
60.67     25.95
65.67     25.95
115.67    25.95
120.67    25.95
125.67    25.95
139.75    25.95
144.75    25.95
149.75    25.95
163.83    25.95
168.83    25.95
173.83    25.95
178.83    25.95
* code 1208 - accuracy
0.00001   0.00001   0.00001   .00001    .00001
* code 1209 number sections
   45
   1A   1B   1C   1R   2L   2A   2B   2C   2R   3L   3A   3B   3C   3R
   4L   4A   4B   4C   4R   5L   5A   5B   5C
   6A   6B   6C   7A   7B   7C   8L   8A   8B   8C   9L   9A   9B   9C
  10L  10A  10B  10C  11L  11A  11B  11C
* code 1210 - density conrete
0.156
* code 1211 - extra forces selfweight

* code 1212 - surcharge
1.603
* code 1213 - Prestressing Layout - NONE
```

4.6.3 Brug Output AASHTO Lanes (Summary)

VEH: HL93- TRUCK - S BRUG(5.75.44) page 55
date 11/09/2009; time 13:25:12
Cline Avenue - Load Rating - Double Box - 4 Webs - 64.125' W

Summary of the results (Maximum)

Section	--- Deadload ---- Moment	Ax.Frc	----- P.T. ------ Moment	Ax.Frc	--- Live load --- Moment	Ax.Frc
1 a	-3.62	0.38	0.00	0.00	1.38	0.07
1 b	-7.10	0.87	0.00	0.00	1.02	0.20
1 c	-11.87	1.64	0.00	0.00	-0.01	0.03
1 right	-13.22	1.88	0.00	0.00	-0.02	0.04
2 left	-6.17	2.62	0.00	0.00	-0.12	0.00
2 a	-5.23	2.40	0.00	0.00	0.30	1.48
2 b	-0.39	1.21	0.00	0.00	3.70	-0.02
2 c	0.23	1.01	0.00	0.00	3.97	-0.42
2 right	-4.44	1.81	0.00	0.00	0.50	1.22
3 left	-4.19	2.08	0.00	0.00	2.84	0.22
3 a	-3.38	1.87	0.00	0.00	2.80	0.82
3 b	0.39	0.79	0.00	0.00	3.96	0.13
3 c	0.56	0.67	0.00	0.00	3.58	0.01
3 right	-4.71	1.53	0.00	0.00	2.60	0.08
4 left	-4.95	1.28	0.00	0.00	0.49	1.16
4 a	-4.08	1.08	0.00	0.00	1.53	0.74
4 b	0.29	0.02	0.00	0.00	3.87	-0.22
4 c	0.72	-0.10	0.00	0.00	3.98	-0.57
4 right	-4.68	1.12	0.00	0.00	-0.08	0.00
5 left	-6.87	1.02	0.00	0.00	-0.01	0.03
5 a	-5.84	0.83	0.00	0.00	-0.01	0.03
5 b	-2.43	0.26	0.00	0.00	0.91	0.07
5 c	-0.33	0.03	0.00	0.00	0.22	0.00
6 a	-0.73	-0.46	0.00	0.00	0.88	-1.15
6 b	-0.25	-0.06	0.00	0.00	0.72	-0.91
6 c	0.82	1.25	0.00	0.00	0.03	-0.04
7 a	-1.34	0.48	0.00	0.00	0.35	-0.49
7 b	-0.79	0.78	0.00	0.00	0.28	-0.38
7 c	0.79	1.51	0.00	0.00	0.02	-0.12
8 top	-7.05	-4.04	0.00	0.00	4.52	-1.87
8 a	-6.42	-3.51	0.00	0.00	3.87	-1.63
8 b	-4.22	-1.54	0.00	0.00	2.05	-0.81
8 c	-2.02	0.16	0.00	0.00	0.61	-0.29
9 top	-0.24	-2.88	0.00	0.00	4.62	-2.01
9 a	-0.01	-2.46	0.00	0.00	3.91	-1.75
9 b	0.81	-0.88	0.00	0.00	1.96	-0.89
9 c	1.63	0.44	0.00	0.00	0.26	-0.08
10 top	0.24	-3.08	0.00	0.00	7.16	-1.50
10 a	0.04	-2.64	0.00	0.00	6.18	-1.29
10 b	-0.70	-1.02	0.00	0.00	3.25	-0.58
10 c	-1.43	0.37	0.00	0.00	0.71	-0.18
11 top	2.19	-3.37	0.00	0.00	3.82	-6.83
11 a	2.11	-2.91	0.00	0.00	3.22	-5.79
11 b	1.81	-1.21	0.00	0.00	1.46	-2.62
11 c	1.50	0.28	0.00	0.00	0.13	0.03

VEH: HL93- TRUCK - S BRUG(5.75.44) page 56
date 11/09/2009; time 13:25:12
Cline Avenue - Load Rating - Double Box - 4 Webs - 64.125' W

Summary of the results (Minimum)

Section	--- Deadload ---- Moment	Ax.Frc	----- P.T. ------ Moment	Ax.Frc	--- Live load --- Moment	Ax.Frc
1 a	-3.62	0.38	0.00	0.00	-0.88	0.06
1 b	-7.10	0.87	0.00	0.00	-6.01	0.17
1 c	-11.87	1.64	0.00	0.00	-9.86	0.56
1 right	-13.22	1.88	0.00	0.00	-12.28	0.79
2 left	-6.17	2.62	0.00	0.00	-6.05	-0.11
2 a	-5.23	2.40	0.00	0.00	-5.33	-0.18
2 b	-0.39	1.21	0.00	0.00	-0.50	0.78
2 c	0.23	1.01	0.00	0.00	-0.48	0.47
2 right	-4.44	1.81	0.00	0.00	-6.02	-0.38
3 left	-4.19	2.08	0.00	0.00	-6.00	0.20
3 a	-3.38	1.87	0.00	0.00	-5.26	0.13
3 b	0.39	0.79	0.00	0.00	-1.08	-0.06
3 c	0.56	0.67	0.00	0.00	-0.40	-0.03
3 right	-4.71	1.53	0.00	0.00	-5.88	0.19
4 left	-4.95	1.28	0.00	0.00	-6.04	-0.54
4 a	-4.08	1.08	0.00	0.00	-5.11	-0.65
4 b	0.29	0.02	0.00	0.00	-0.75	-0.54
4 c	0.72	-0.10	0.00	0.00	-0.26	0.14
4 right	-4.68	1.12	0.00	0.00	-6.00	-0.25
5 left	-6.87	1.02	0.00	0.00	-6.80	0.74
5 a	-5.84	0.83	0.00	0.00	-5.21	0.48
5 b	-2.43	0.26	0.00	0.00	-0.01	0.07
5 c	-0.33	0.03	0.00	0.00	-0.02	0.01
6 a	-0.73	-0.46	0.00	0.00	-0.32	0.27
6 b	-0.25	-0.06	0.00	0.00	-0.27	0.29
6 c	0.82	1.25	0.00	0.00	-0.05	0.94
7 a	-1.34	0.48	0.00	0.00	-0.69	0.73
7 b	-0.79	0.78	0.00	0.00	-0.59	0.71
7 c	0.79	1.51	0.00	0.00	-0.05	0.95
8 top	-7.05	-4.04	0.00	0.00	-9.98	-6.69
8 a	-6.42	-3.51	0.00	0.00	-8.41	-5.70
8 b	-4.22	-1.54	0.00	0.00	-4.13	-2.66
8 c	-2.02	0.16	0.00	0.00	-0.47	-0.68
9 top	-0.24	-2.88	0.00	0.00	-7.02	-1.51
9 a	-0.01	-2.46	0.00	0.00	-6.06	-1.30
9 b	0.81	-0.88	0.00	0.00	-3.18	-0.59
9 c	1.63	0.44	0.00	0.00	-0.70	-0.18
10 top	0.24	-3.08	0.00	0.00	-4.51	-2.00
10 a	0.04	-2.64	0.00	0.00	-3.81	-1.74
10 b	-0.70	-1.02	0.00	0.00	-1.90	-0.88
10 c	-1.43	0.37	0.00	0.00	-0.30	-0.18
11 top	2.19	-3.37	0.00	0.00	-4.51	-1.87
11 a	2.11	-2.91	0.00	0.00	-3.86	-1.63
11 b	1.81	-1.21	0.00	0.00	-2.05	-0.81
11 c	1.50	0.28	0.00	0.00	-0.61	-0.29

1_III_A_HL93_tandem_EL.OUT 9/11/2009

VEH: HL93- TANDEM- S BRUG(5.75.44) page 55
date 11/09/2009; time 13:25:11
Cline Avenue - Load Rating - Double Box - 4 Webs - 64.125' W

Summary of the results (Maximum)

Section	--- Deadload ----		----- P.T. ------		--- Live load ---	
	Moment	Ax.Frc	Moment	Ax.Frc	Moment	Ax.Frc
1 a	-3.62	0.38	0.00	0.00	1.11	0.08
1 b	-7.10	0.87	0.00	0.00	0.66	0.28
1 c	-11.87	1.64	0.00	0.00	-0.01	0.02
1 right	-13.22	1.88	0.00	0.00	-0.01	0.02
2 left	-6.17	2.62	0.00	0.00	-0.09	0.00
2 a	-5.23	2.40	0.00	0.00	-0.09	0.00
2 b	-0.39	1.21	0.00	0.00	3.35	-0.01
2 c	0.23	1.01	0.00	0.00	3.69	-0.38
2 right	-4.44	1.81	0.00	0.00	-0.13	-0.24
3 left	-4.19	2.08	0.00	0.00	2.11	0.12
3 a	-3.38	1.87	0.00	0.00	1.91	0.11
3 b	0.39	0.79	0.00	0.00	3.53	0.09
3 c	0.56	0.67	0.00	0.00	3.38	-0.07
3 right	-4.71	1.53	0.00	0.00	1.59	0.04
4 left	-4.95	1.28	0.00	0.00	-0.34	0.27
4 a	-4.08	1.08	0.00	0.00	0.30	0.87
4 b	0.29	0.02	0.00	0.00	3.49	-0.15
4 c	0.72	-0.10	0.00	0.00	3.70	-0.51
4 right	-4.68	1.12	0.00	0.00	-0.05	0.00
5 left	-6.87	1.02	0.00	0.00	-0.01	0.02
5 a	-5.84	0.83	0.00	0.00	-0.01	0.02
5 b	-2.43	0.26	0.00	0.00	0.54	0.14
5 c	-0.33	0.03	0.00	0.00	0.17	0.01
6 a	-0.73	-0.46	0.00	0.00	0.74	-1.06
6 b	-0.25	-0.06	0.00	0.00	0.57	-0.80
6 c	0.82	1.25	0.00	0.00	0.02	0.00
7 a	-1.34	0.48	0.00	0.00	0.31	-0.24
7 b	-0.79	0.78	0.00	0.00	0.23	-0.08
7 c	0.79	1.51	0.00	0.00	0.01	-0.08
8 top	-7.05	-4.04	0.00	0.00	4.50	-2.10
8 a	-6.42	-3.51	0.00	0.00	3.80	-1.86
8 b	-4.22	-1.54	0.00	0.00	1.90	-0.96
8 c	-2.02	0.16	0.00	0.00	0.49	-0.33
9 top	-0.24	-2.88	0.00	0.00	4.53	-2.37
9 a	-0.01	-2.46	0.00	0.00	3.79	-2.10
9 b	0.81	-0.88	0.00	0.00	1.78	-1.04
9 c	1.63	0.44	0.00	0.00	0.17	-0.05
10 top	0.24	-3.08	0.00	0.00	6.45	-2.28
10 a	0.04	-2.64	0.00	0.00	5.33	-1.68
10 b	-0.70	-1.02	0.00	0.00	2.69	-0.84
10 c	-1.43	0.37	0.00	0.00	0.55	-0.26
11 top	2.19	-3.37	0.00	0.00	3.33	-6.19
11 a	2.11	-2.91	0.00	0.00	2.79	-5.44
11 b	1.81	-1.21	0.00	0.00	1.24	-2.78
11 c	1.50	0.28	0.00	0.00	0.09	0.02

1_III_A_HL93_tandem_EL.OUT 9/11/2009

VEH: HL93- TANDEM- S BRUG(5.75.44) page 56
date 11/09/2009; time 13:25:11
Cline Avenue - Load Rating - Double Box - 4 Webs - 64.125' W

Summary of the results (Minimum)

Section	--- Deadload ----		----- P.T. ------		--- Live load ---	
	Moment	Ax.Frc	Moment	Ax.Frc	Moment	Ax.Frc
1 a	-3.62	0.38	0.00	0.00	-1.30	0.06
1 b	-7.10	0.87	0.00	0.00	-6.37	0.21
1 c	-11.87	1.64	0.00	0.00	-10.87	0.65
1 right	-13.22	1.88	0.00	0.00	-13.06	0.84
2 left	-6.17	2.62	0.00	0.00	-6.86	0.08
2 a	-5.23	2.40	0.00	0.00	-6.04	-0.13
2 b	-0.39	1.21	0.00	0.00	-0.70	0.73
2 c	0.23	1.01	0.00	0.00	-0.46	0.44
2 right	-4.44	1.81	0.00	0.00	-6.89	-0.06
3 left	-4.19	2.08	0.00	0.00	-6.53	0.19
3 a	-3.38	1.87	0.00	0.00	-5.67	0.10
3 b	0.39	0.79	0.00	0.00	-0.72	-0.06
3 c	0.56	0.67	0.00	0.00	-0.35	-0.02
3 right	-4.71	1.53	0.00	0.00	-6.45	0.18
4 left	-4.95	1.28	0.00	0.00	-6.91	-0.18
4 a	-4.08	1.08	0.00	0.00	-6.11	-0.40
4 b	0.29	0.02	0.00	0.00	-0.71	-0.48
4 c	0.72	-0.10	0.00	0.00	-0.18	0.09
4 right	-4.68	1.12	0.00	0.00	-6.79	-0.09
5 left	-6.87	1.02	0.00	0.00	-7.24	0.79
5 a	-5.84	0.83	0.00	0.00	-5.68	0.59
5 b	-2.43	0.26	0.00	0.00	-0.38	0.13
5 c	-0.33	0.03	0.00	0.00	-0.05	0.01
6 a	-0.73	-0.46	0.00	0.00	-0.26	0.21
6 b	-0.25	-0.06	0.00	0.00	-0.22	0.23
6 c	0.82	1.25	0.00	0.00	-0.04	0.99
7 a	-1.34	0.48	0.00	0.00	-0.52	0.56
7 b	-0.79	0.78	0.00	0.00	-0.44	0.56
7 c	0.79	1.51	0.00	0.00	-0.04	0.99
8 top	-7.05	-4.04	0.00	0.00	-9.45	-6.35
8 a	-6.42	-3.51	0.00	0.00	-7.95	-5.59
8 b	-4.22	-1.54	0.00	0.00	-3.77	-2.91
8 c	-2.02	0.16	0.00	0.00	-0.40	-0.75
9 top	-0.24	-2.88	0.00	0.00	-6.35	-2.29
9 a	-0.01	-2.46	0.00	0.00	-5.24	-1.68
9 b	0.81	-0.88	0.00	0.00	-2.64	-0.84
9 c	1.63	0.44	0.00	0.00	-0.55	-0.26
10 top	0.24	-3.08	0.00	0.00	-4.45	-2.36
10 a	0.04	-2.64	0.00	0.00	-3.73	-2.09
10 b	-0.70	-1.02	0.00	0.00	-1.75	-1.04
10 c	-1.43	0.37	0.00	0.00	-0.23	-0.19
11 top	2.19	-3.37	0.00	0.00	-4.51	-2.09
11 a	2.11	-2.91	0.00	0.00	-3.81	-1.85
11 b	1.81	-1.21	0.00	0.00	-1.91	-0.96
11 c	1.50	0.28	0.00	0.00	-0.50	-0.33

VEH: R1 - TOLL ROAD BRUG(5.75.44) page 55
date 11/09/2009; time 13:25:12
Cline Avenue - Load Rating - Double Box - 4 Webs - 64.125' W

Summary of the results (Maximum)

Section	--- Deadload ----		----- P.T. ------		--- Live load ---	
	Moment	Ax.Frc	Moment	Ax.Frc	Moment	Ax.Frc
1 a	-3.62	0.38	0.00	0.00	0.57	0.11
1 b	-7.10	0.87	0.00	0.00	0.38	0.27
1 c	-11.87	1.64	0.00	0.00	-0.02	0.04
1 right	-13.22	1.88	0.00	0.00	-0.02	0.04
2 left	-6.17	2.62	0.00	0.00	-0.15	0.00
2 a	-5.23	2.40	0.00	0.00	0.44	1.56
2 b	-0.39	1.21	0.00	0.00	3.28	0.01
2 c	0.23	1.01	0.00	0.00	3.50	-0.48
2 right	-4.44	1.81	0.00	0.00	1.20	1.08
3 left	-4.19	2.08	0.00	0.00	3.48	0.27
3 a	-3.38	1.87	0.00	0.00	3.50	0.82
3 b	0.39	0.79	0.00	0.00	3.55	0.19
3 c	0.56	0.67	0.00	0.00	3.20	0.05
3 right	-4.71	1.53	0.00	0.00	3.44	0.82
4 left	-4.95	1.28	0.00	0.00	1.20	1.01
4 a	-4.08	1.08	0.00	0.00	1.76	0.70
4 b	0.29	0.02	0.00	0.00	3.49	-0.24
4 c	0.72	-0.10	0.00	0.00	3.51	-0.66
4 right	-4.68	1.12	0.00	0.00	-0.10	0.00
5 left	-6.87	1.02	0.00	0.00	-0.02	0.04
5 a	-5.84	0.83	0.00	0.00	-0.01	0.03
5 b	-2.43	0.26	0.00	0.00	0.32	0.09
5 c	-0.33	0.03	0.00	0.00	0.08	0.01
6 a	-0.73	-0.46	0.00	0.00	1.05	-1.38
6 b	-0.25	-0.06	0.00	0.00	0.88	-1.13
6 c	0.82	1.25	0.00	0.00	0.03	-0.07
7 a	-1.34	0.48	0.00	0.00	0.40	-0.57
7 b	-0.79	0.78	0.00	0.00	0.34	-0.46
7 c	0.79	1.51	0.00	0.00	0.02	-0.14
8 top	-7.05	-4.04	0.00	0.00	5.13	-1.57
8 a	-6.42	-3.51	0.00	0.00	4.50	-1.39
8 b	-4.22	-1.54	0.00	0.00	2.49	-0.73
8 c	-2.02	0.16	0.00	0.00	0.76	-0.26
9 top	-0.24	-2.88	0.00	0.00	5.19	-1.67
9 a	-0.01	-2.46	0.00	0.00	4.51	-1.48
9 b	0.81	-0.88	0.00	0.00	2.36	-0.80
9 c	1.63	0.44	0.00	0.00	0.32	-0.10
10 top	0.24	-3.08	0.00	0.00	8.33	-1.11
10 a	0.04	-2.64	0.00	0.00	7.31	-0.96
10 b	-0.70	-1.02	0.00	0.00	3.95	-0.45
10 c	-1.43	0.37	0.00	0.00	0.89	-0.13
11 top	2.19	-3.37	0.00	0.00	4.39	-4.36
11 a	2.11	-2.91	0.00	0.00	3.77	-3.81
11 b	1.81	-1.21	0.00	0.00	1.76	-1.95
11 c	1.50	0.28	0.00	0.00	0.16	0.04

VEH: R1 - TOLL ROAD BRUG(5.75.44) page 56
date 11/09/2009; time 13:25:12
Cline Avenue - Load Rating - Double Box - 4 Webs - 64.125' W

Summary of the results (Minimum)

Section	--- Deadload ----		----- P.T. ------		--- Live load ---	
	Moment	Ax.Frc	Moment	Ax.Frc	Moment	Ax.Frc
1 a	-3.62	0.38	0.00	0.00	-1.85	0.11
1 b	-7.10	0.87	0.00	0.00	-6.34	0.26
1 c	-11.87	1.64	0.00	0.00	-10.93	0.59
1 right	-13.22	1.88	0.00	0.00	-12.86	0.73
2 left	-6.17	2.62	0.00	0.00	-5.88	-0.23
2 a	-5.23	2.40	0.00	0.00	-5.19	-0.27
2 b	-0.39	1.21	0.00	0.00	-0.58	0.97
2 c	0.23	1.01	0.00	0.00	-0.59	0.59
2 right	-4.44	1.81	0.00	0.00	-5.89	-0.57
3 left	-4.19	2.08	0.00	0.00	-6.10	0.20
3 a	-3.38	1.87	0.00	0.00	-5.35	0.16
3 b	0.39	0.79	0.00	0.00	-1.34	-0.08
3 c	0.56	0.67	0.00	0.00	-0.49	-0.04
3 right	-4.71	1.53	0.00	0.00	-5.96	0.19
4 left	-4.95	1.28	0.00	0.00	-5.91	-0.77
4 a	-4.08	1.08	0.00	0.00	-5.23	-0.80
4 b	0.29	0.02	0.00	0.00	-0.60	-0.43
4 c	0.72	-0.10	0.00	0.00	-0.32	0.18
4 right	-4.68	1.12	0.00	0.00	-5.82	-0.39
5 left	-6.87	1.02	0.00	0.00	-5.89	0.52
5 a	-5.84	0.83	0.00	0.00	-4.69	0.39
5 b	-2.43	0.26	0.00	0.00	-0.47	0.09
5 c	-0.33	0.03	0.00	0.00	-0.02	0.01
6 a	-0.73	-0.46	0.00	0.00	-0.40	0.33
6 b	-0.25	-0.06	0.00	0.00	-0.34	0.35
6 c	0.82	1.25	0.00	0.00	-0.06	1.12
7 a	-1.34	0.48	0.00	0.00	-0.84	0.89
7 b	-0.79	0.78	0.00	0.00	-0.72	0.86
7 c	0.79	1.51	0.00	0.00	-0.06	1.13
8 top	-7.05	-4.04	0.00	0.00	-11.25	-4.62
8 a	-6.42	-3.51	0.00	0.00	-9.75	-4.05
8 b	-4.22	-1.54	0.00	0.00	-5.01	-2.12
8 c	-2.02	0.16	0.00	0.00	-0.61	-0.61
9 top	-0.24	-2.88	0.00	0.00	-8.16	-1.13
9 a	-0.01	-2.46	0.00	0.00	-7.16	-0.98
9 b	0.81	-0.88	0.00	0.00	-3.87	-0.46
9 c	1.63	0.44	0.00	0.00	-0.88	-0.14
10 top	0.24	-3.08	0.00	0.00	-5.05	-1.65
10 a	0.04	-2.64	0.00	0.00	-4.39	-1.46
10 b	-0.70	-1.02	0.00	0.00	-2.30	-0.79
10 c	-1.43	0.37	0.00	0.00	-0.38	-0.19
11 top	2.19	-3.37	0.00	0.00	-5.12	-1.57
11 a	2.11	-2.91	0.00	0.00	-4.48	-1.39
11 b	1.81	-1.21	0.00	0.00	-2.49	-0.73
11 c	1.50	0.28	0.00	0.00	-0.77	-0.27

VEH: R2 - TOLL ROAD BRUG(5.75.44) page 55
date 11/09/2009; time 13:25:13
Cline Avenue - Load Rating - Double Box - 4 Webs - 64.125' W

Summary of the results (Maximum)

Section	--- Deadload ----		----- P.T. ------		--- Live load ---	
	Moment	Ax.Frc	Moment	Ax.Frc	Moment	Ax.Frc
1 a	-3.62	0.38	0.00	0.00	0.90	0.08
1 b	-7.10	0.87	0.00	0.00	0.70	0.18
1 c	-11.87	1.64	0.00	0.00	-0.02	0.04
1 right	-13.22	1.88	0.00	0.00	-0.02	0.05
2 left	-6.17	2.62	0.00	0.00	-0.14	0.01
2 a	-5.23	2.40	0.00	0.00	0.98	1.31
2 b	-0.39	1.21	0.00	0.00	3.22	-0.01
2 c	0.23	1.01	0.00	0.00	3.40	-0.44
2 right	-4.44	1.81	0.00	0.00	1.33	0.98
3 left	-4.19	2.08	0.00	0.00	3.49	0.85
3 a	-3.38	1.87	0.00	0.00	3.73	0.67
3 b	0.39	0.79	0.00	0.00	3.50	0.15
3 c	0.56	0.67	0.00	0.00	3.09	0.05
3 right	-4.71	1.53	0.00	0.00	3.62	0.75
4 left	-4.95	1.28	0.00	0.00	1.33	0.91
4 a	-4.08	1.08	0.00	0.00	2.08	0.53
4 b	0.29	0.02	0.00	0.00	3.41	-0.26
4 c	0.72	-0.10	0.00	0.00	3.41	-0.59
4 right	-4.68	1.12	0.00	0.00	-0.10	0.01
5 left	-6.87	1.02	0.00	0.00	-0.02	0.04
5 a	-5.84	0.83	0.00	0.00	-0.01	0.34
5 b	-2.43	0.26	0.00	0.00	0.64	0.05
5 c	-0.33	0.03	0.00	0.00	0.14	0.00
6 a	-0.73	-0.46	0.00	0.00	0.95	-1.18
6 b	-0.25	-0.06	0.00	0.00	0.80	-0.97
6 c	0.82	1.25	0.00	0.00	0.03	-0.06
7 a	-1.34	0.48	0.00	0.00	0.36	-0.48
7 b	-0.79	0.78	0.00	0.00	0.30	-0.39
7 c	0.79	1.51	0.00	0.00	0.02	-0.14
8 top	-7.05	-4.04	0.00	0.00	4.33	-1.37
8 a	-6.42	-3.51	0.00	0.00	3.78	-1.20
8 b	-4.22	-1.54	0.00	0.00	2.11	-0.61
8 c	-2.02	0.16	0.00	0.00	0.67	-0.22
9 top	-0.24	-2.88	0.00	0.00	4.52	-1.47
9 a	-0.01	-2.46	0.00	0.00	3.91	-1.02
9 b	0.81	-0.88	0.00	0.00	2.07	-0.54
9 c	1.63	0.44	0.00	0.00	0.31	-0.10
10 top	0.24	-3.08	0.00	0.00	7.53	-0.88
10 a	0.04	-2.64	0.00	0.00	6.59	-0.75
10 b	-0.70	-1.02	0.00	0.00	3.57	-0.32
10 c	-1.43	0.37	0.00	0.00	0.79	-0.09
11 top	2.19	-3.37	0.00	0.00	3.91	-4.84
11 a	2.11	-2.91	0.00	0.00	3.35	-4.05
11 b	1.81	-1.21	0.00	0.00	1.56	-1.79
11 c	1.50	0.28	0.00	0.00	0.15	0.04

VEH: R2 - TOLL ROAD BRUG(5.75.44) page 56
date 11/09/2009; time 13:25:13
Cline Avenue - Load Rating - Double Box - 4 Webs - 64.125' W

Summary of the results (Minimum)

Section	--- Deadload ----		----- P.T. ------		--- Live load ---	
	Moment	Ax.Frc	Moment	Ax.Frc	Moment	Ax.Frc
1 a	-3.62	0.38	0.00	0.00	-1.10	0.07
1 b	-7.10	0.87	0.00	0.00	-5.34	0.17
1 c	-11.87	1.64	0.00	0.00	-8.82	0.45
1 right	-13.22	1.88	0.00	0.00	-10.79	0.62
2 left	-6.17	2.62	0.00	0.00	-4.91	-0.20
2 a	-5.23	2.40	0.00	0.00	-4.34	-0.24
2 b	-0.39	1.21	0.00	0.00	-0.36	0.79
2 c	0.23	1.01	0.00	0.00	-0.46	0.48
2 right	-4.44	1.81	0.00	0.00	-4.84	-0.56
3 left	-4.19	2.08	0.00	0.00	-5.18	0.17
3 a	-3.38	1.87	0.00	0.00	-4.63	0.09
3 b	0.39	0.79	0.00	0.00	-1.30	-0.06
3 c	0.56	0.67	0.00	0.00	-0.42	-0.03
3 right	-4.71	1.53	0.00	0.00	-5.04	0.16
4 left	-4.95	1.28	0.00	0.00	-4.86	-0.73
4 a	-4.08	1.08	0.00	0.00	-4.31	-0.75
4 b	0.29	0.02	0.00	0.00	-0.56	-0.39
4 c	0.72	-0.10	0.00	0.00	-0.31	0.18
4 right	-4.68	1.12	0.00	0.00	-4.86	-0.33
5 left	-6.87	1.02	0.00	0.00	-5.26	0.51
5 a	-5.84	0.83	0.00	0.00	-4.09	0.33
5 b	-2.43	0.26	0.00	0.00	-0.09	0.05
5 c	-0.33	0.03	0.00	0.00	-0.01	0.01
6 a	-0.73	-0.46	0.00	0.00	-0.35	0.30
6 b	-0.25	-0.06	0.00	0.00	-0.30	0.32
6 c	0.82	1.25	0.00	0.00	-0.06	0.93
7 a	-1.34	0.48	0.00	0.00	-0.78	0.83
7 b	-0.79	0.78	0.00	0.00	-0.67	0.79
7 c	0.79	1.51	0.00	0.00	-0.06	0.93
8 top	-7.05	-4.04	0.00	0.00	-9.75	-4.87
8 a	-6.42	-3.51	0.00	0.00	-8.33	-4.11
8 b	-4.22	-1.54	0.00	0.00	-4.27	-1.89
8 c	-2.02	0.16	0.00	0.00	-0.49	-0.53
9 top	-0.24	-2.88	0.00	0.00	-7.37	-0.90
9 a	-0.01	-2.46	0.00	0.00	-6.45	-0.77
9 b	0.81	-0.88	0.00	0.00	-3.49	-0.33
9 c	1.63	0.44	0.00	0.00	-0.78	-0.10
10 top	0.24	-3.08	0.00	0.00	-4.38	-1.45
10 a	0.04	-2.64	0.00	0.00	-3.79	-1.01
10 b	-0.70	-1.02	0.00	0.00	-2.01	-0.53
10 c	-1.43	0.37	0.00	0.00	-0.34	-0.15
11 top	2.19	-3.37	0.00	0.00	-4.31	-1.36
11 a	2.11	-2.91	0.00	0.00	-3.76	-1.19
11 b	1.81	-1.21	0.00	0.00	-2.11	-0.61
11 c	1.50	0.28	0.00	0.00	-0.67	-0.23

VEH: R3 - TOLL ROAD BRUG(5.75.44) page 55
date 11/09/2009; time 13:25:14
Cline Avenue - Load Rating - Double Box - 4 Webs - 64.125' W

Summary of the results (Maximum)

Section	Deadload Moment	Deadload Ax.Frc	P.T. Moment	P.T. Ax.Frc	Live load Moment	Live load Ax.Frc
1 a	-3.62	0.38	0.00	0.00	0.75	0.04
1 b	-7.10	0.87	0.00	0.00	0.50	0.15
1 c	-11.87	1.64	0.00	0.00	-0.02	0.08
1 right	-13.22	1.88	0.00	0.00	-0.03	0.09
2 left	-6.17	2.62	0.00	0.00	-0.17	0.04
2 a	-5.23	2.40	0.00	0.00	0.71	1.26
2 b	-0.39	1.21	0.00	0.00	3.14	-0.08
2 c	0.23	1.01	0.00	0.00	3.22	-0.56
2 right	-4.44	1.81	0.00	0.00	1.09	0.74
3 left	-4.19	2.08	0.00	0.00	4.08	0.65
3 a	-3.38	1.87	0.00	0.00	4.28	0.53
3 b	0.39	0.79	0.00	0.00	3.56	0.03
3 c	0.56	0.67	0.00	0.00	2.96	-0.03
3 right	-4.71	1.53	0.00	0.00	4.26	0.57
4 left	-4.95	1.28	0.00	0.00	1.09	0.67
4 a	-4.08	1.08	0.00	0.00	1.77	0.33
4 b	0.29	0.02	0.00	0.00	3.35	-0.44
4 c	0.72	-0.10	0.00	0.00	3.24	-0.67
4 right	-4.68	1.12	0.00	0.00	-0.13	0.01
5 left	-6.87	1.02	0.00	0.00	-0.02	0.05
5 a	-5.84	0.83	0.00	0.00	-0.02	0.04
5 b	-2.43	0.26	0.00	0.00	0.42	0.07
5 c	-0.33	0.03	0.00	0.00	0.12	0.00
6 a	-0.73	-0.46	0.00	0.00	1.02	-1.15
6 b	-0.25	-0.06	0.00	0.00	0.85	-0.92
6 c	0.82	1.25	0.00	0.00	0.02	-0.19
7 a	-1.34	0.48	0.00	0.00	0.38	-0.47
7 b	-0.79	0.78	0.00	0.00	0.31	-0.45
7 c	0.79	1.51	0.00	0.00	0.02	-0.18
8 top	-7.05	-4.04	0.00	0.00	4.20	-1.62
8 a	-6.42	-3.51	0.00	0.00	3.64	-1.43
8 b	-4.22	-1.54	0.00	0.00	1.98	-0.75
8 c	-2.02	0.16	0.00	0.00	0.63	-0.27
9 top	-0.24	-2.88	0.00	0.00	4.83	-1.36
9 a	-0.01	-2.46	0.00	0.00	4.19	-1.15
9 b	0.81	-0.88	0.00	0.00	2.23	-0.42
9 c	1.63	0.44	0.00	0.00	0.41	-0.13
10 top	0.24	-3.08	0.00	0.00	8.48	-0.95
10 a	0.04	-2.64	0.00	0.00	7.39	-0.82
10 b	-0.70	-1.02	0.00	0.00	3.92	-0.36
10 c	-1.43	0.37	0.00	0.00	0.81	-0.10
11 top	2.19	-3.37	0.00	0.00	4.05	-4.49
11 a	2.11	-2.91	0.00	0.00	3.45	-3.94
11 b	1.81	-1.21	0.00	0.00	1.56	-2.04
11 c	1.50	0.28	0.00	0.00	0.20	0.05

VEH: R3 - TOLL ROAD BRUG(5.75.44) page 56
date 11/09/2009; time 13:25:14
Cline Avenue - Load Rating - Double Box - 4 Webs - 64.125' W

Summary of the results (Minimum)

Section	Deadload Moment	Deadload Ax.Frc	P.T. Moment	P.T. Ax.Frc	Live load Moment	Live load Ax.Frc
1 a	-3.62	0.38	0.00	0.00	-1.22	0.03
1 b	-7.10	0.87	0.00	0.00	-5.20	0.11
1 c	-11.87	1.64	0.00	0.00	-8.91	0.37
1 right	-13.22	1.88	0.00	0.00	-10.67	0.49
2 left	-6.17	2.62	0.00	0.00	-5.21	-0.19
2 a	-5.23	2.40	0.00	0.00	-4.62	-0.25
2 b	-0.39	1.21	0.00	0.00	-0.35	0.18
2 c	0.23	1.01	0.00	0.00	-0.42	0.26
2 right	-4.44	1.81	0.00	0.00	-4.95	-0.70
3 left	-4.19	2.08	0.00	0.00	-5.66	0.11
3 a	-3.38	1.87	0.00	0.00	-5.11	0.08
3 b	0.39	0.79	0.00	0.00	-1.57	0.00
3 c	0.56	0.67	0.00	0.00	-0.42	0.10
3 right	-4.71	1.53	0.00	0.00	-5.48	0.09
4 left	-4.95	1.28	0.00	0.00	-4.96	-0.83
4 a	-4.08	1.08	0.00	0.00	-4.41	-0.85
4 b	0.29	0.02	0.00	0.00	-0.52	-0.41
4 c	0.72	-0.10	0.00	0.00	-0.41	0.24
4 right	-4.68	1.12	0.00	0.00	-5.16	-0.29
5 left	-6.87	1.02	0.00	0.00	-5.48	0.47
5 a	-5.84	0.83	0.00	0.00	-4.30	0.34
5 b	-2.43	0.26	0.00	0.00	-0.30	0.07
5 c	-0.33	0.03	0.00	0.00	-0.02	0.01
6 a	-0.73	-0.46	0.00	0.00	-0.33	0.29
6 b	-0.25	-0.06	0.00	0.00	-0.29	0.30
6 c	0.82	1.25	0.00	0.00	-0.06	0.92
7 a	-1.34	0.48	0.00	0.00	-0.85	0.94
7 b	-0.79	0.78	0.00	0.00	-0.73	0.89
7 c	0.79	1.51	0.00	0.00	-0.06	0.93
8 top	-7.05	-4.04	0.00	0.00	-9.58	-4.59
8 a	-6.42	-3.51	0.00	0.00	-8.19	-4.04
8 b	-4.22	-1.54	0.00	0.00	-4.04	-2.14
8 c	-2.02	0.16	0.00	0.00	-0.35	-0.62
9 top	-0.24	-2.88	0.00	0.00	-8.29	-0.97
9 a	-0.01	-2.46	0.00	0.00	-7.22	-0.84
9 b	0.81	-0.88	0.00	0.00	-3.83	-0.37
9 c	1.63	0.44	0.00	0.00	-0.80	-0.11
10 top	0.24	-3.08	0.00	0.00	-4.66	-1.34
10 a	0.04	-2.64	0.00	0.00	-4.04	-1.13
10 b	-0.70	-1.02	0.00	0.00	-2.14	-0.41
10 c	-1.43	0.37	0.00	0.00	-0.40	-0.12
11 top	2.19	-3.37	0.00	0.00	-4.18	-1.61
11 a	2.11	-2.91	0.00	0.00	-3.62	-1.42
11 b	1.81	-1.21	0.00	0.00	-1.97	-0.75
11 c	1.50	0.28	0.00	0.00	-0.64	-0.27

date 11/09/2009; time 13:25:14
Cline Avenue - Load Rating - Double Box - 4 Webs - 64.125' W

Summary of the results (Maximum)

Section	Deadload Moment	Deadload Ax.Frc	P.T. Moment	P.T. Ax.Frc	Live load Moment	Live load Ax.Frc
1 a	-3.62	0.38	0.00	0.00	0.59	0.08
1 b	-7.10	0.87	0.00	0.00	0.51	0.15
1 c	-11.87	1.64	0.00	0.00	0.24	0.39
1 right	-13.22	1.88	0.00	0.00	0.05	0.53
2 left	-6.17	2.62	0.00	0.00	1.05	1.70
2 a	-5.23	2.40	0.00	0.00	1.94	1.35
2 b	-0.39	1.21	0.00	0.00	3.30	-0.04
2 c	0.23	1.01	0.00	0.00	3.35	-0.57
2 right	-4.44	1.81	0.00	0.00	2.44	0.83
3 left	-4.19	2.08	0.00	0.00	5.79	0.67
3 a	-3.38	1.87	0.00	0.00	5.69	0.52
3 b	0.39	0.79	0.00	0.00	3.70	0.17
3 c	0.56	0.67	0.00	0.00	3.06	0.10
3 right	-4.71	1.53	0.00	0.00	5.99	0.54
4 left	-4.95	1.28	0.00	0.00	2.44	0.73
4 a	-4.08	1.08	0.00	0.00	3.04	0.33
4 b	0.29	0.02	0.00	0.00	3.55	-0.42
4 c	0.72	-0.10	0.00	0.00	3.37	-0.75
4 right	-4.68	1.12	0.00	0.00	0.13	1.10
5 left	-6.87	1.02	0.00	0.00	0.05	0.36
5 a	-5.84	0.83	0.00	0.00	0.24	0.22
5 b	-2.43	0.26	0.00	0.00	0.48	0.03
5 c	-0.33	0.03	0.00	0.00	0.09	0.00
6 a	-0.73	-0.46	0.00	0.00	1.21	-1.40
6 b	-0.25	-0.06	0.00	0.00	1.05	-1.19
6 c	0.82	1.25	0.00	0.00	0.03	-0.21
7 a	-1.34	0.48	0.00	0.00	0.44	-0.54
7 b	-0.79	0.78	0.00	0.00	0.38	-0.54
7 c	0.79	1.51	0.00	0.00	0.03	-0.20
8 top	-7.05	-4.04	0.00	0.00	4.64	-0.87
8 a	-6.42	-3.51	0.00	0.00	4.11	-0.77
8 b	-4.22	-1.54	0.00	0.00	2.47	-0.55
8 c	-2.02	0.16	0.00	0.00	0.84	-0.21
9 top	-0.24	-2.88	0.00	0.00	5.56	-1.03
9 a	-0.01	-2.46	0.00	0.00	4.91	-0.92
9 b	0.81	-0.88	0.00	0.00	2.68	-0.54
9 c	1.63	0.44	0.00	0.00	0.47	-0.16
10 top	0.24	-3.08	0.00	0.00	9.33	-0.10
10 a	0.04	-2.64	0.00	0.00	8.45	-0.34
10 b	-0.70	-1.02	0.00	0.00	4.64	-0.10
10 c	-1.43	0.37	0.00	0.00	1.03	-0.02
11 top	2.19	-3.37	0.00	0.00	4.80	-3.79
11 a	2.11	-2.91	0.00	0.00	4.14	-3.16
11 b	1.81	-1.21	0.00	0.00	1.95	-1.42
11 c	1.50	0.28	0.00	0.00	0.22	0.05

VEH: R4 - MICHIGAN T BRUG(5.75.44) page 56
date 11/09/2009; time 13:25:14
Cline Avenue - Load Rating - Double Box - 4 Webs - 64.125' W

Summary of the results (Minimum)

Section	Deadload Moment	Deadload Ax.Frc	P.T. Moment	P.T. Ax.Frc	Live load Moment	Live load Ax.Frc
1 a	-3.62	0.38	0.00	0.00	-1.45	0.08
1 b	-7.10	0.87	0.00	0.00	-5.38	0.16
1 c	-11.87	1.64	0.00	0.00	-9.02	0.37
1 right	-13.22	1.88	0.00	0.00	-10.83	0.49
2 left	-6.17	2.62	0.00	0.00	-4.70	-0.31
2 a	-5.23	2.40	0.00	0.00	-4.22	-0.34
2 b	-0.39	1.21	0.00	0.00	-0.40	0.17
2 c	0.23	1.01	0.00	0.00	-0.48	0.52
2 right	-4.44	1.81	0.00	0.00	-4.69	-0.84
3 left	-4.19	2.08	0.00	0.00	-6.18	0.06
3 a	-3.38	1.87	0.00	0.00	-5.71	0.05
3 b	0.39	0.79	0.00	0.00	-1.87	-0.05
3 c	0.56	0.67	0.00	0.00	-0.49	-0.02
3 right	-4.71	1.53	0.00	0.00	-5.98	0.09
4 left	-4.95	1.28	0.00	0.00	-4.70	-1.04
4 a	-4.08	1.08	0.00	0.00	-4.04	-1.08
4 b	0.29	0.02	0.00	0.00	-0.62	-0.49
4 c	0.72	-0.10	0.00	0.00	-0.48	0.28
4 right	-4.68	1.12	0.00	0.00	-4.65	-0.44
5 left	-6.87	1.02	0.00	0.00	-4.67	0.34
5 a	-5.84	0.83	0.00	0.00	-3.68	0.21
5 b	-2.43	0.26	0.00	0.00	-0.19	0.03
5 c	-0.33	0.03	0.00	0.00	-0.01	0.00
6 a	-0.73	-0.46	0.00	0.00	-0.45	0.40
6 b	-0.25	-0.06	0.00	0.00	-0.38	0.41
6 c	0.82	1.25	0.00	0.00	-0.07	1.02
7 a	-1.34	0.48	0.00	0.00	-1.06	1.12
7 b	-0.79	0.78	0.00	0.00	-0.91	1.05
7 c	0.79	1.51	0.00	0.00	-0.07	1.03
8 top	-7.05	-4.04	0.00	0.00	-11.10	-3.92
8 a	-6.42	-3.51	0.00	0.00	-9.65	-3.30
8 b	-4.22	-1.54	0.00	0.00	-5.05	-1.56
8 c	-2.02	0.16	0.00	0.00	-0.56	-0.51
9 top	-0.24	-2.88	0.00	0.00	-9.10	-0.13
9 a	-0.01	-2.46	0.00	0.00	-8.25	-0.37
9 b	0.81	-0.88	0.00	0.00	-4.54	-0.11
9 c	1.63	0.44	0.00	0.00	-1.01	-0.02
10 top	0.24	-3.08	0.00	0.00	-5.35	-1.00
10 a	0.04	-2.64	0.00	0.00	-4.73	-0.90
10 b	-0.70	-1.02	0.00	0.00	-2.58	-0.53
10 c	-1.43	0.37	0.00	0.00	-0.46	-0.16
11 top	2.19	-3.37	0.00	0.00	-4.60	-0.87
11 a	2.11	-2.91	0.00	0.00	-4.08	-0.77
11 b	1.81	-1.21	0.00	0.00	-2.46	-0.55
11 c	1.50	0.28	0.00	0.00	-0.85	-0.22

VEH: R5 - MICHIGAN T BRUG(5.75.44) page 55
date 11/09/2009; time 13:25:15
Cline Avenue - Load Rating - Double Box - 4 Webs - 64.125' W

Summary of the results (Maximum)

Section	--- Deadload ----		----- P.T. ------		--- Live load ---	
	Moment	Ax.Frc	Moment	Ax.Frc	Moment	Ax.Frc
1 a	-3.62	0.38	0.00	0.00	0.24	0.11
1 b	-7.10	0.87	0.00	0.00	0.11	0.28
1 c	-11.87	1.64	0.00	0.00	-0.02	0.07
1 right	-13.22	1.88	0.00	0.00	-0.03	0.08
2 left	-6.17	2.62	0.00	0.00	0.25	1.96
2 a	-5.23	2.40	0.00	0.00	1.03	1.66
2 b	-0.39	1.21	0.00	0.00	3.50	-0.25
2 c	0.23	1.01	0.00	0.00	3.57	-0.64
2 right	-4.44	1.81	0.00	0.00	2.02	0.97
3 left	-4.19	2.08	0.00	0.00	5.28	0.79
3 a	-3.38	1.87	0.00	0.00	5.19	0.73
3 b	0.39	0.79	0.00	0.00	3.85	0.19
3 c	0.56	0.67	0.00	0.00	3.30	0.07
3 right	-4.71	1.53	0.00	0.00	5.49	0.65
4 left	-4.95	1.28	0.00	0.00	2.02	0.86
4 a	-4.08	1.08	0.00	0.00	2.43	0.55
4 b	0.29	0.02	0.00	0.00	3.73	-0.40
4 c	0.72	-0.10	0.00	0.00	3.59	-0.84
4 right	-4.68	1.12	0.00	0.00	-0.15	0.01
5 left	-6.87	1.02	0.00	0.00	-0.02	0.06
5 a	-5.84	0.83	0.00	0.00	-0.02	0.05
5 b	-2.43	0.26	0.00	0.00	0.07	0.10
5 c	-0.33	0.03	0.00	0.00	0.03	0.01
6 a	-0.73	-0.46	0.00	0.00	1.33	-1.63
6 b	-0.25	-0.06	0.00	0.00	1.13	-1.35
6 c	0.82	1.25	0.00	0.00	0.03	-0.06
7 a	-1.34	0.48	0.00	0.00	0.50	-0.66
7 b	-0.79	0.78	0.00	0.00	0.42	-0.53
7 c	0.79	1.51	0.00	0.00	0.03	-0.20
8 top	-7.05	-4.04	0.00	0.00	5.80	-1.59
8 a	-6.42	-3.51	0.00	0.00	5.13	-1.42
8 b	-4.22	-1.54	0.00	0.00	2.89	-0.78
8 c	-2.02	0.16	0.00	0.00	0.92	-0.28
9 top	-0.24	-2.88	0.00	0.00	6.21	-1.41
9 a	-0.01	-2.46	0.00	0.00	5.46	-1.27
9 b	0.81	-0.88	0.00	0.00	2.92	-0.73
9 c	1.63	0.44	0.00	0.00	0.46	-0.15
10 top	0.24	-3.08	0.00	0.00	10.57	-0.86
10 a	0.04	-2.64	0.00	0.00	9.32	-0.75
10 b	-0.70	-1.02	0.00	0.00	5.07	-0.35
10 c	-1.43	0.37	0.00	0.00	1.11	-0.09
11 top	2.19	-3.37	0.00	0.00	5.35	-3.38
11 a	2.11	-2.91	0.00	0.00	4.63	-3.04
11 b	1.81	-1.21	0.00	0.00	2.17	-1.77
11 c	1.50	0.28	0.00	0.00	0.23	0.05

VEH: R5 - MICHIGAN T BRUG(5.75.44) page 56
date 11/09/2009; time 13:25:15
Cline Avenue - Load Rating - Double Box - 4 Webs - 64.125' W

Summary of the results (Minimum)

Section	--- Deadload ----		----- P.T. ------		--- Live load ---	
	Moment	Ax.Frc	Moment	Ax.Frc	Moment	Ax.Frc
1 a	-3.62	0.38	0.00	0.00	-2.36	0.11
1 b	-7.10	0.87	0.00	0.00	-6.77	0.26
1 c	-11.87	1.64	0.00	0.00	-11.94	0.54
1 right	-13.22	1.88	0.00	0.00	-13.75	0.63
2 left	-6.17	2.62	0.00	0.00	-6.41	-0.29
2 a	-5.23	2.40	0.00	0.00	-5.63	-0.34
2 b	-0.39	1.21	0.00	0.00	-0.42	1.07
2 c	0.23	1.01	0.00	0.00	-0.60	0.63
2 right	-4.44	1.81	0.00	0.00	-6.28	-0.84
3 left	-4.19	2.08	0.00	0.00	-7.05	0.15
3 a	-3.38	1.87	0.00	0.00	-6.33	0.12
3 b	0.39	0.79	0.00	0.00	-1.89	-0.07
3 c	0.56	0.67	0.00	0.00	-0.57	-0.03
3 right	-4.71	1.53	0.00	0.00	-6.84	0.14
4 left	-4.95	1.28	0.00	0.00	-6.30	-1.06
4 a	-4.08	1.08	0.00	0.00	-5.54	-1.07
4 b	0.29	0.02	0.00	0.00	-0.65	-0.54
4 c	0.72	-0.10	0.00	0.00	-0.46	0.27
4 right	-4.68	1.12	0.00	0.00	-6.35	-0.46
5 left	-6.87	1.02	0.00	0.00	-5.80	0.40
5 a	-5.84	0.83	0.00	0.00	-4.71	0.33
5 b	-2.43	0.26	0.00	0.00	-0.69	0.10
5 c	-0.33	0.03	0.00	0.00	-0.02	0.01
6 a	-0.73	-0.46	0.00	0.00	-0.49	0.43
6 b	-0.25	-0.06	0.00	0.00	-0.42	0.44
6 c	0.82	1.25	0.00	0.00	-0.08	1.28
7 a	-1.34	0.48	0.00	0.00	-1.11	1.18
7 b	-0.79	0.78	0.00	0.00	-0.96	1.13
7 c	0.79	1.51	0.00	0.00	-0.08	1.29
8 top	-7.05	-4.04	0.00	0.00	-12.95	-3.86
8 a	-6.42	-3.51	0.00	0.00	-11.32	-3.47
8 b	-4.22	-1.54	0.00	0.00	-5.87	-2.02
8 c	-2.02	0.16	0.00	0.00	-0.66	-0.65
9 top	-0.24	-2.88	0.00	0.00	-10.34	-0.88
9 a	-0.01	-2.46	0.00	0.00	-9.12	-0.77
9 b	0.81	-0.88	0.00	0.00	-4.96	-0.36
9 c	1.63	0.44	0.00	0.00	-1.10	-0.10
10 top	0.24	-3.08	0.00	0.00	-6.01	-1.39
10 a	0.04	-2.64	0.00	0.00	-5.28	-1.25
10 b	-0.70	-1.02	0.00	0.00	-2.83	-0.72
10 c	-1.43	0.37	0.00	0.00	-0.47	-0.21
11 top	2.19	-3.37	0.00	0.00	-5.77	-1.59
11 a	2.11	-2.91	0.00	0.00	-5.10	-1.42
11 b	1.81	-1.21	0.00	0.00	-2.89	-0.79
11 c	1.50	0.28	0.00	0.00	-0.93	-0.29

1_III_A_S1_EL.OUT 9/11/2009

VEH: S1 - SPECIAL TR BRUG(5.75.44) page 55
date 11/09/2009; time 13:25:16
Cline Avenue - Load Rating - Double Box - 4 Webs - 64.125' W

Summary of the results (Maximum)

Section	--- Deadload ----		----- P.T. ------		--- Live load ---	
	Moment	Ax.Frc	Moment	Ax.Frc	Moment	Ax.Frc
1 a	-3.62	0.38	0.00	0.00	0.91	0.05
1 b	-7.10	0.87	0.00	0.00	0.61	0.19
1 c	-11.87	1.64	0.00	0.00	-0.04	0.14
1 right	-13.22	1.88	0.00	0.00	-0.05	0.16
2 left	-6.17	2.62	0.00	0.00	-0.26	0.08
2 a	-5.23	2.40	0.00	0.00	1.02	1.65
2 b	-0.39	1.21	0.00	0.00	4.20	-0.16
2 c	0.23	1.01	0.00	0.00	4.31	-0.84
2 right	-4.44	1.81	0.00	0.00	1.59	0.87
3 left	-4.19	2.08	0.00	0.00	6.48	0.78
3 a	-3.38	1.87	0.00	0.00	6.62	0.63
3 b	0.39	0.79	0.00	0.00	4.90	0.02
3 c	0.56	0.67	0.00	0.00	4.00	-0.06
3 right	-4.71	1.53	0.00	0.00	6.76	0.70
4 left	-4.95	1.28	0.00	0.00	1.60	0.76
4 a	-4.08	1.08	0.00	0.00	2.46	0.31
4 b	0.29	0.02	0.00	0.00	4.49	-0.67
4 c	0.72	-0.10	0.00	0.00	4.34	-0.97
4 right	-4.68	1.12	0.00	0.00	-0.18	0.03
5 left	-6.87	1.02	0.00	0.00	-0.04	0.09
5 a	-5.84	0.83	0.00	0.00	-0.03	0.07
5 b	-2.43	0.26	0.00	0.00	0.50	0.09
5 c	-0.33	0.03	0.00	0.00	0.15	0.01
6 a	-0.73	-0.46	0.00	0.00	1.41	-1.56
6 b	-0.25	-0.06	0.00	0.00	1.19	-1.25
6 c	0.82	1.25	0.00	0.00	0.04	-0.29
7 a	-1.34	0.48	0.00	0.00	0.51	-0.75
7 b	-0.79	0.78	0.00	0.00	0.43	-0.69
7 c	0.79	1.51	0.00	0.00	0.04	-0.28
8 top	-7.05	-4.04	0.00	0.00	5.60	-2.11
8 a	-6.42	-3.51	0.00	0.00	4.86	-1.87
8 b	-4.22	-1.54	0.00	0.00	2.69	-0.99
8 c	-2.02	0.16	0.00	0.00	0.90	-0.37
9 top	-0.24	-2.88	0.00	0.00	6.96	-1.05
9 a	-0.01	-2.46	0.00	0.00	6.17	-0.94
9 b	0.81	-0.88	0.00	0.00	3.40	-0.56
9 c	1.63	0.44	0.00	0.00	0.64	-0.20
10 top	0.24	-3.08	0.00	0.00	12.31	-1.06
10 a	0.04	-2.64	0.00	0.00	10.76	-0.91
10 b	-0.70	-1.02	0.00	0.00	5.75	-0.38
10 c	-1.43	0.37	0.00	0.00	1.18	-0.10
11 top	2.19	-3.37	0.00	0.00	5.45	-5.71
11 a	2.11	-2.91	0.00	0.00	4.65	-5.02
11 b	1.81	-1.21	0.00	0.00	2.10	-2.64
11 c	1.50	0.28	0.00	0.00	0.31	0.07

1_III_A_S1_EL.OUT 9/11/2009

VEH: S1 - SPECIAL TR BRUG(5.75.44) page 56
date 11/09/2009; time 13:25:16
Cline Avenue - Load Rating - Double Box - 4 Webs - 64.125' W

Summary of the results (Minimum)

Section	--- Deadload ----		----- P.T. ------		--- Live load ---	
	Moment	Ax.Frc	Moment	Ax.Frc	Moment	Ax.Frc
1 a	-3.62	0.38	0.00	0.00	-1.72	0.04
1 b	-7.10	0.87	0.00	0.00	-6.92	0.14
1 c	-11.87	1.64	0.00	0.00	-11.91	0.47
1 right	-13.22	1.88	0.00	0.00	-14.19	0.62
2 left	-6.17	2.62	0.00	0.00	-6.85	-0.29
2 a	-5.23	2.40	0.00	0.00	-6.05	-0.36
2 b	-0.39	1.21	0.00	0.00	-0.55	0.33
2 c	0.23	1.01	0.00	0.00	-0.66	0.46
2 right	-4.44	1.81	0.00	0.00	-6.46	-1.12
3 left	-4.19	2.08	0.00	0.00	-8.01	0.14
3 a	-3.38	1.87	0.00	0.00	-7.44	0.12
3 b	0.39	0.79	0.00	0.00	-2.46	0.05
3 c	0.56	0.67	0.00	0.00	-0.68	0.13
3 right	-4.71	1.53	0.00	0.00	-7.70	0.15
4 left	-4.95	1.28	0.00	0.00	-6.45	-1.26
4 a	-4.08	1.08	0.00	0.00	-5.72	-1.28
4 b	0.29	0.02	0.00	0.00	-0.75	0.56
4 c	0.72	-0.10	0.00	0.00	-0.64	0.39
4 right	-4.68	1.12	0.00	0.00	-6.79	-0.41
5 left	-6.87	1.02	0.00	0.00	-7.15	0.59
5 a	-5.84	0.83	0.00	0.00	-5.63	0.42
5 b	-2.43	0.26	0.00	0.00	-0.43	0.09
5 c	-0.33	0.03	0.00	0.00	-0.03	0.01
6 a	-0.73	-0.46	0.00	0.00	-0.44	0.16
6 b	-0.25	-0.06	0.00	0.00	-0.38	0.14
6 c	0.82	1.25	0.00	0.00	-0.08	1.28
7 a	-1.34	0.48	0.00	0.00	-1.21	1.37
7 b	-0.79	0.78	0.00	0.00	-1.04	1.29
7 c	0.79	1.51	0.00	0.00	-0.08	1.29
8 top	-7.05	-4.04	0.00	0.00	-12.87	-5.88
8 a	-6.42	-3.51	0.00	0.00	-11.05	-5.19
8 b	-4.22	-1.54	0.00	0.00	-5.47	-2.78
8 c	-2.02	0.16	0.00	0.00	-0.46	-0.82
9 top	-0.24	-2.88	0.00	0.00	-12.03	-1.10
9 a	-0.01	-2.46	0.00	0.00	-10.51	-0.95
9 b	0.81	-0.88	0.00	0.00	-5.61	-0.40
9 c	1.63	0.44	0.00	0.00	-1.16	-0.11
10 top	0.24	-3.08	0.00	0.00	-6.67	-1.01
10 a	0.04	-2.64	0.00	0.00	-5.92	-0.91
10 b	-0.70	-1.02	0.00	0.00	-3.26	-0.54
10 c	-1.43	0.37	0.00	0.00	-0.62	-0.19
11 top	2.19	-3.37	0.00	0.00	-5.58	-2.10
11 a	2.11	-2.91	0.00	0.00	-4.84	-1.86
11 b	1.81	-1.21	0.00	0.00	-2.68	-0.99
11 c	1.50	0.28	0.00	0.00	-0.92	-0.37

1_III_A_S2_EL.OUT 9/11/2009

VEH: S2 - SPECIAL TR BRUG(5.75.44) page 55
date 11/09/2009; time 13:25:16
Cline Avenue - Load Rating - Double Box - 4 Webs - 64.125' W

Summary of the results (Maximum)

Section	--- Deadload ----		----- P.T. ------		--- Live load ---	
	Moment	Ax.Frc	Moment	Ax.Frc	Moment	Ax.Frc
1 a	-3.62	0.38	0.00	0.00	0.74	0.07
1 b	-7.10	0.87	0.00	0.00	0.47	0.21
1 c	-11.87	1.64	0.00	0.00	-0.04	0.14
1 right	-13.22	1.88	0.00	0.00	-0.05	0.16
2 left	-6.17	2.62	0.00	0.00	-0.15	1.96
2 a	-5.23	2.40	0.00	0.00	1.09	1.59
2 b	-0.39	1.21	0.00	0.00	3.95	-0.15
2 c	0.23	1.01	0.00	0.00	4.10	-0.84
2 right	-4.44	1.81	0.00	0.00	1.76	0.76
3 left	-4.19	2.08	0.00	0.00	6.65	0.72
3 a	-3.38	1.87	0.00	0.00	6.64	0.58
3 b	0.39	0.79	0.00	0.00	4.65	0.01
3 c	0.56	0.67	0.00	0.00	3.83	-0.07
3 right	-4.71	1.53	0.00	0.00	6.93	0.64
4 left	-4.95	1.28	0.00	0.00	1.76	0.66
4 a	-4.08	1.08	0.00	0.00	2.50	0.25
4 b	0.29	0.02	0.00	0.00	4.24	-0.66
4 c	0.72	-0.10	0.00	0.00	4.13	-0.97
4 right	-4.68	1.12	0.00	0.00	-0.18	0.03
5 left	-6.87	1.02	0.00	0.00	-0.04	0.09
5 a	-5.84	0.83	0.00	0.00	-0.03	0.07
5 b	-2.43	0.26	0.00	0.00	0.40	0.09
5 c	-0.33	0.03	0.00	0.00	0.11	0.01
6 a	-0.73	-0.46	0.00	0.00	1.39	-1.54
6 b	-0.25	-0.06	0.00	0.00	1.17	-1.25
6 c	0.82	1.25	0.00	0.00	0.04	-0.29
7 a	-1.34	0.48	0.00	0.00	0.50	-0.74
7 b	-0.79	0.78	0.00	0.00	0.42	-0.68
7 c	0.79	1.51	0.00	0.00	0.04	-0.28
8 top	-7.05	-4.04	0.00	0.00	5.47	-1.85
8 a	-6.42	-3.51	0.00	0.00	4.79	-1.64
8 b	-4.22	-1.54	0.00	0.00	2.68	-0.89
8 c	-2.02	0.16	0.00	0.00	0.91	-0.33
9 top	-0.24	-2.88	0.00	0.00	6.91	-1.03
9 a	-0.01	-2.46	0.00	0.00	6.13	-0.93
9 b	0.81	-0.88	0.00	0.00	3.38	-0.55
9 c	1.63	0.44	0.00	0.00	0.64	-0.20
10 top	0.24	-3.08	0.00	0.00	12.13	-0.82
10 a	0.04	-2.64	0.00	0.00	10.64	-0.70
10 b	-0.70	-1.02	0.00	0.00	5.73	-0.29
10 c	-1.43	0.37	0.00	0.00	1.19	-0.07
11 top	2.19	-3.37	0.00	0.00	5.28	-4.89
11 a	2.11	-2.91	0.00	0.00	4.53	-4.27
11 b	1.81	-1.21	0.00	0.00	2.07	-2.23
11 c	1.50	0.28	0.00	0.00	0.31	0.07

1_III_A_S2_EL.OUT 9/11/2009

VEH: S2 - SPECIAL TR BRUG(5.75.44) page 56
date 11/09/2009; time 13:25:16
Cline Avenue - Load Rating - Double Box - 4 Webs - 64.125' W

Summary of the results (Minimum)

Section	--- Deadload ----		----- P.T. ------		--- Live load ---	
	Moment	Ax.Frc	Moment	Ax.Frc	Moment	Ax.Frc
1 a	-3.62	0.38	0.00	0.00	-1.82	0.06
1 b	-7.10	0.87	0.00	0.00	-6.73	0.16
1 c	-11.87	1.64	0.00	0.00	-11.57	0.46
1 right	-13.22	1.88	0.00	0.00	-13.68	0.59
2 left	-6.17	2.62	0.00	0.00	-6.51	-0.30
2 a	-5.23	2.40	0.00	0.00	-5.74	-0.37
2 b	-0.39	1.21	0.00	0.00	-0.55	0.33
2 c	0.23	1.01	0.00	0.00	-0.66	0.47
2 right	-4.44	1.81	0.00	0.00	-6.15	-1.12
3 left	-4.19	2.08	0.00	0.00	-7.97	0.15
3 a	-3.38	1.87	0.00	0.00	-7.40	0.13
3 b	0.39	0.79	0.00	0.00	-2.44	0.06
3 c	0.56	0.67	0.00	0.00	-0.68	0.13
3 right	-4.71	1.53	0.00	0.00	-7.66	0.15
4 left	-4.95	1.28	0.00	0.00	-6.15	-1.26
4 a	-4.08	1.08	0.00	0.00	-5.43	-1.26
4 b	0.29	0.02	0.00	0.00	-0.75	0.56
4 c	0.72	-0.10	0.00	0.00	-0.63	0.39
4 right	-4.68	1.12	0.00	0.00	-6.45	-0.42
5 left	-6.87	1.02	0.00	0.00	-6.51	0.53
5 a	-5.84	0.83	0.00	0.00	-5.18	0.39
5 b	-2.43	0.26	0.00	0.00	-0.47	0.09
5 c	-0.33	0.03	0.00	0.00	-0.03	0.01
6 a	-0.73	-0.46	0.00	0.00	-0.43	0.16
6 b	-0.25	-0.06	0.00	0.00	-0.37	0.14
6 c	0.82	1.25	0.00	0.00	-0.08	1.30
7 a	-1.34	0.48	0.00	0.00	-1.19	1.35
7 b	-0.79	0.78	0.00	0.00	-1.03	1.27
7 c	0.79	1.51	0.00	0.00	-0.08	1.31
8 top	-7.05	-4.04	0.00	0.00	-12.60	-5.18
8 a	-6.42	-3.51	0.00	0.00	-10.86	-4.54
8 b	-4.22	-1.54	0.00	0.00	-5.44	-2.42
8 c	-2.02	0.16	0.00	0.00	-0.47	-0.74
9 top	-0.24	-2.88	0.00	0.00	-11.85	-0.85
9 a	-0.01	-2.46	0.00	0.00	-10.39	-0.74
9 b	0.81	-0.88	0.00	0.00	-5.59	-0.31
9 c	1.63	0.44	0.00	0.00	-1.17	-0.08
10 top	0.24	-3.08	0.00	0.00	-6.61	-0.99
10 a	0.04	-2.64	0.00	0.00	-5.87	-0.89
10 b	-0.70	-1.02	0.00	0.00	-3.24	-0.53
10 c	-1.43	0.37	0.00	0.00	-0.61	-0.19
11 top	2.19	-3.37	0.00	0.00	-5.45	-1.84
11 a	2.11	-2.91	0.00	0.00	-4.77	-1.63
11 b	1.81	-1.21	0.00	0.00	-2.67	-0.89
11 c	1.50	0.28	0.00	0.00	-0.92	-0.34

VEH: S3 - SPECIAL TR BRUG(5.75.44) page 55
date 11/09/2009; time 13:25:17
Cline Avenue - Load Rating - Double Box - 4 Webs - 64.125' W

Summary of the results (Maximum)

Section	--- Deadload ----		----- P.T. ------		--- Live load ---	
	Moment	Ax.Frc	Moment	Ax.Frc	Moment	Ax.Frc
1 a	-3.62	0.38	0.00	0.00	0.65	0.11
1 b	-7.10	0.87	0.00	0.00	0.41	0.30
1 c	-11.87	1.64	0.00	0.00	-0.05	0.17
1 right	-13.22	1.88	0.00	0.00	-0.06	0.19
2 left	-6.17	2.62	0.00	0.00	0.43	2.59
2 a	-5.23	2.40	0.00	0.00	1.74	2.12
2 b	-0.39	1.21	0.00	0.00	4.99	-0.15
2 c	0.23	1.01	0.00	0.00	5.15	-1.08
2 right	-4.44	1.81	0.00	0.00	2.80	1.04
3 left	-4.19	2.08	0.00	0.00	9.00	0.89
3 a	-3.38	1.87	0.00	0.00	8.82	0.75
3 b	0.39	0.79	0.00	0.00	5.83	0.08
3 c	0.56	0.67	0.00	0.00	4.80	-0.05
3 right	-4.71	1.53	0.00	0.00	9.36	0.76
4 left	-4.95	1.28	0.00	0.00	2.80	0.88
4 a	-4.08	1.08	0.00	0.00	3.58	0.36
4 b	0.29	0.02	0.00	0.00	5.38	-0.83
4 c	0.72	-0.10	0.00	0.00	5.18	-1.28
4 right	-4.68	1.12	0.00	0.00	-0.24	0.03
5 left	-6.87	1.02	0.00	0.00	-0.05	0.11
5 a	-5.84	0.83	0.00	0.00	-0.04	0.09
5 b	-2.43	0.26	0.00	0.00	0.34	0.12
5 c	-0.33	0.03	0.00	0.00	0.09	0.01
6 a	-0.73	-0.46	0.00	0.00	1.88	-2.13
6 b	-0.25	-0.06	0.00	0.00	1.59	-1.75
6 c	0.82	1.25	0.00	0.00	0.05	-0.37
7 a	-1.34	0.48	0.00	0.00	0.68	-1.00
7 b	-0.79	0.78	0.00	0.00	0.57	-0.84
7 c	0.79	1.51	0.00	0.00	0.05	-0.36
8 top	-7.05	-4.04	0.00	0.00	7.43	-2.20
8 a	-6.42	-3.51	0.00	0.00	6.55	-1.95
8 b	-4.22	-1.54	0.00	0.00	3.72	-1.07
8 c	-2.02	0.16	0.00	0.00	1.26	-0.41
9 top	-0.24	-2.88	0.00	0.00	9.04	-1.82
9 a	-0.01	-2.46	0.00	0.00	7.97	-1.36
9 b	0.81	-0.88	0.00	0.00	4.37	-0.76
9 c	1.63	0.44	0.00	0.00	0.82	-0.25
10 top	0.24	-3.08	0.00	0.00	15.96	-0.88
10 a	0.04	-2.64	0.00	0.00	14.05	-0.75
10 b	-0.70	-1.02	0.00	0.00	7.63	-0.29
10 c	-1.43	0.37	0.00	0.00	1.62	-0.07
11 top	2.19	-3.37	0.00	0.00	7.21	-5.43
11 a	2.11	-2.91	0.00	0.00	6.21	-4.77
11 b	1.81	-1.21	0.00	0.00	2.87	-2.56
11 c	1.50	0.28	0.00	0.00	0.39	0.09

VEH: S3 - SPECIAL TR BRUG(5.75.44) page 56
date 11/09/2009; time 13:25:17
Cline Avenue - Load Rating - Double Box - 4 Webs - 64.125' W

Summary of the results (Minimum)

Section	--- Deadload ----		----- P.T. ------		--- Live load ---	
	Moment	Ax.Frc	Moment	Ax.Frc	Moment	Ax.Frc
1 a	-3.62	0.38	0.00	0.00	-2.72	0.10
1 b	-7.10	0.87	0.00	0.00	-8.85	0.26
1 c	-11.87	1.64	0.00	0.00	-15.35	0.61
1 right	-13.22	1.88	0.00	0.00	-17.93	0.76
2 left	-6.17	2.62	0.00	0.00	-8.41	-0.42
2 a	-5.23	2.40	0.00	0.00	-7.39	-0.50
2 b	-0.39	1.21	0.00	0.00	-0.71	0.40
2 c	0.23	1.01	0.00	0.00	-0.84	0.57
2 right	-4.44	1.81	0.00	0.00	-7.99	-1.46
3 left	-4.19	2.08	0.00	0.00	-10.25	0.15
3 a	-3.38	1.87	0.00	0.00	-9.52	0.13
3 b	0.39	0.79	0.00	0.00	-3.16	0.05
3 c	0.56	0.67	0.00	0.00	-0.85	0.18
3 right	-4.71	1.53	0.00	0.00	-9.86	0.19
4 left	-4.95	1.28	0.00	0.00	-8.00	-1.67
4 a	-4.08	1.08	0.00	0.00	-7.03	-1.67
4 b	0.29	0.02	0.00	0.00	-0.96	0.71
4 c	0.72	-0.10	0.00	0.00	-0.82	0.49
4 right	-4.68	1.12	0.00	0.00	-8.32	-0.60
5 left	-6.87	1.02	0.00	0.00	-7.97	0.60
5 a	-5.84	0.83	0.00	0.00	-6.40	0.45
5 b	-2.43	0.26	0.00	0.00	-0.73	0.12
5 c	-0.33	0.03	0.00	0.00	-0.03	0.01
6 a	-0.73	-0.46	0.00	0.00	-0.60	0.29
6 b	-0.25	-0.06	0.00	0.00	-0.52	0.27
6 c	0.82	1.25	0.00	0.00	-0.11	1.75
7 a	-1.34	0.48	0.00	0.00	-1.61	1.80
7 b	-0.79	0.78	0.00	0.00	-1.40	1.70
7 c	0.79	1.51	0.00	0.00	-0.11	1.76
8 top	-7.05	-4.04	0.00	0.00	-17.07	-5.90
8 a	-6.42	-3.51	0.00	0.00	-14.83	-5.20
8 b	-4.22	-1.54	0.00	0.00	-7.56	-2.85
8 c	-2.02	0.16	0.00	0.00	-0.72	-0.90
9 top	-0.24	-2.88	0.00	0.00	-15.59	-0.92
9 a	-0.01	-2.46	0.00	0.00	-13.73	-0.79
9 b	0.81	-0.88	0.00	0.00	-7.45	-0.32
9 c	1.63	0.44	0.00	0.00	-1.59	-0.08
10 top	0.24	-3.08	0.00	0.00	-8.68	-1.77
10 a	0.04	-2.64	0.00	0.00	-7.65	-1.32
10 b	-0.70	-1.02	0.00	0.00	-4.20	-0.73
10 c	-1.43	0.37	0.00	0.00	-0.79	-0.24
11 top	2.19	-3.37	0.00	0.00	-7.40	-2.19
11 a	2.11	-2.91	0.00	0.00	-6.52	-1.95
11 b	1.81	-1.21	0.00	0.00	-3.71	-1.07
11 c	1.50	0.28	0.00	0.00	-1.28	-0.41

VEH: S4 - SUPER LOAD BRUG(5.75.44) page 55
date 11/09/2009; time 13:25:18
Cline Avenue - Load Rating - Double Box - 4 Webs - 64.125' W

Summary of the results (Maximum)

Section	Deadload Moment	Deadload Ax.Frc	P.T. Moment	P.T. Ax.Frc	Live load Moment	Live load Ax.Frc
1 a	-3.62	0.38	0.00	0.00	0.52	0.05
1 b	-7.10	0.87	0.00	0.00	0.38	0.14
1 c	-11.87	1.64	0.00	0.00	-0.04	0.15
1 right	-13.22	1.88	0.00	0.00	-0.05	0.17
2 left	-6.17	2.62	0.00	0.00	0.76	1.71
2 a	-5.23	2.40	0.00	0.00	1.67	1.39
2 b	-0.39	1.21	0.00	0.00	3.54	-0.16
2 c	0.23	1.01	0.00	0.00	3.57	-0.83
2 right	-4.44	1.81	0.00	0.00	2.25	0.57
3 left	-4.19	2.08	0.00	0.00	7.52	0.48
3 a	-3.38	1.87	0.00	0.00	7.32	0.38
3 b	0.39	0.79	0.00	0.00	4.27	0.00
3 c	0.56	0.67	0.00	0.00	3.33	-0.04
3 right	-4.71	1.53	0.00	0.00	7.82	0.41
4 left	-4.95	1.28	0.00	0.00	2.26	0.47
4 a	-4.08	1.08	0.00	0.00	2.86	0.06
4 b	0.29	0.02	0.00	0.00	3.83	-0.71
4 c	0.72	-0.10	0.00	0.00	3.59	-0.95
4 right	-4.68	1.12	0.00	0.00	-0.18	1.17
5 left	-6.87	1.02	0.00	0.00	-0.04	0.10
5 a	-5.84	0.83	0.00	0.00	-0.03	0.08
5 b	-2.43	0.26	0.00	0.00	0.32	0.05
5 c	-0.33	0.03	0.00	0.00	0.08	0.00
6 a	-0.73	-0.46	0.00	0.00	1.38	-1.46
6 b	-0.25	-0.06	0.00	0.00	1.18	-1.20
6 c	0.82	1.25	0.00	0.00	0.04	-0.31
7 a	-1.34	0.48	0.00	0.00	0.50	-0.79
7 b	-0.79	0.78	0.00	0.00	0.44	-0.76
7 c	0.79	1.51	0.00	0.00	0.04	-0.30
8 top	-7.05	-4.04	0.00	0.00	4.94	-1.52
8 a	-6.42	-3.51	0.00	0.00	4.36	-1.34
8 b	-4.22	-1.54	0.00	0.00	2.52	-0.72
8 c	-2.02	0.16	0.00	0.00	0.91	-0.28
9 top	-0.24	-2.88	0.00	0.00	7.36	-1.13
9 a	-0.01	-2.46	0.00	0.00	6.52	-1.01
9 b	0.81	-0.88	0.00	0.00	3.59	-0.60
9 c	1.63	0.44	0.00	0.00	0.67	-0.21
10 top	0.24	-3.08	0.00	0.00	12.01	-0.39
10 a	0.04	-2.64	0.00	0.00	10.58	-0.32
10 b	-0.70	-1.02	0.00	0.00	5.75	-0.07
10 c	-1.43	0.37	0.00	0.00	1.21	0.00
11 top	2.19	-3.37	0.00	0.00	5.16	-3.94
11 a	2.11	-2.91	0.00	0.00	4.43	-3.46
11 b	1.81	-1.21	0.00	0.00	2.03	-1.83
11 c	1.50	0.28	0.00	0.00	0.32	0.08

VEH: S4 - SUPER LOAD BRUG(5.75.44) page 56
date 11/09/2009; time 13:25:18
Cline Avenue - Load Rating - Double Box - 4 Webs - 64.125' W

Summary of the results (Minimum)

Section	Deadload Moment	Deadload Ax.Frc	P.T. Moment	P.T. Ax.Frc	Live load Moment	Live load Ax.Frc
1 a	-3.62	0.38	0.00	0.00	-1.67	0.04
1 b	-7.10	0.87	0.00	0.00	-5.73	0.12
1 c	-11.87	1.64	0.00	0.00	-9.90	0.33
1 right	-13.22	1.88	0.00	0.00	-11.68	0.43
2 left	-6.17	2.62	0.00	0.00	-5.48	-0.32
2 a	-5.23	2.40	0.00	0.00	-4.80	-0.38
2 b	-0.39	1.21	0.00	0.00	-0.58	0.36
2 c	0.23	1.01	0.00	0.00	-0.69	0.51
2 right	-4.44	1.81	0.00	0.00	-5.06	-1.20
3 left	-4.19	2.08	0.00	0.00	-8.48	0.16
3 a	-3.38	1.87	0.00	0.00	-7.87	0.14
3 b	0.39	0.79	0.00	0.00	-2.58	0.09
3 c	0.56	0.67	0.00	0.00	-0.72	0.15
3 right	-4.71	1.53	0.00	0.00	-8.17	0.14
4 left	-4.95	1.28	0.00	0.00	-5.05	-1.33
4 a	-4.08	1.08	0.00	0.00	-4.43	-1.32
4 b	0.29	0.02	0.00	0.00	-0.79	0.60
4 c	0.72	-0.10	0.00	0.00	-0.67	0.42
4 right	-4.68	1.12	0.00	0.00	-5.43	-0.42
5 left	-6.87	1.02	0.00	0.00	-5.34	0.36
5 a	-5.84	0.83	0.00	0.00	-4.23	0.26
5 b	-2.43	0.26	0.00	0.00	-0.40	0.05
5 c	-0.33	0.03	0.00	0.00	-0.01	0.00
6 a	-0.73	-0.46	0.00	0.00	-0.45	0.14
6 b	-0.25	-0.06	0.00	0.00	-0.38	0.11
6 c	0.82	1.25	0.00	0.00	-0.08	1.16
7 a	-1.34	0.48	0.00	0.00	-1.22	1.39
7 b	-0.79	0.78	0.00	0.00	-1.06	1.30
7 c	0.79	1.51	0.00	0.00	-0.08	1.17
8 top	-7.05	-4.04	0.00	0.00	-11.68	-4.12
8 a	-6.42	-3.51	0.00	0.00	-10.13	-3.63
8 b	-4.22	-1.54	0.00	0.00	-5.15	-1.96
8 c	-2.02	0.16	0.00	0.00	-0.44	-0.63
9 top	-0.24	-2.88	0.00	0.00	-11.72	-0.43
9 a	-0.01	-2.46	0.00	0.00	-10.32	-0.36
9 b	0.81	-0.88	0.00	0.00	-5.61	-0.09
9 c	1.63	0.44	0.00	0.00	-1.18	-0.01
10 top	0.24	-3.08	0.00	0.00	-7.05	-1.09
10 a	0.04	-2.64	0.00	0.00	-6.25	-0.98
10 b	-0.70	-1.02	0.00	0.00	-3.45	-0.58
10 c	-1.43	0.37	0.00	0.00	-0.65	-0.20
11 top	2.19	-3.37	0.00	0.00	-4.90	-1.51
11 a	2.11	-2.91	0.00	0.00	-4.33	-1.34
11 b	1.81	-1.21	0.00	0.00	-2.51	-0.73
11 c	1.50	0.28	0.00	0.00	-0.92	-0.29

1_III_A_S5_EL.OUT 9/11/2009

VEH: S5 - SUPERLOAD BRUG(5.75.44) page 55
date 11/09/2009; time 13:25:18
Cline Avenue - Load Rating - Double Box - 4 Webs - 64.125' W

Summary of the results (Maximum)

Section	--- Deadload ----		----- P.T. ------		--- Live load ---	
	Moment	Ax.Frc	Moment	Ax.Frc	Moment	Ax.Frc
1 a	-3.62	0.38	0.00	0.00	0.82	0.07
1 b	-7.10	0.87	0.00	0.00	0.53	0.22
1 c	-11.87	1.64	0.00	0.00	-0.06	0.21
1 right	-13.22	1.88	0.00	0.00	-0.07	0.24
2 left	-6.17	2.62	0.00	0.00	0.21	2.31
2 a	-5.23	2.40	0.00	0.00	1.61	1.88
2 b	-0.39	1.21	0.00	0.00	4.79	-0.23
2 c	0.23	1.01	0.00	0.00	4.94	-1.13
2 right	-4.44	1.81	0.00	0.00	2.40	0.75
3 left	-4.19	2.08	0.00	0.00	9.35	0.71
3 a	-3.38	1.87	0.00	0.00	9.18	0.56
3 b	0.39	0.79	0.00	0.00	5.79	-0.05
3 c	0.56	0.67	0.00	0.00	4.64	-0.13
3 right	-4.71	1.53	0.00	0.00	9.74	0.65
4 left	-4.95	1.28	0.00	0.00	2.42	0.64
4 a	-4.08	1.08	0.00	0.00	3.28	0.11
4 b	0.29	0.02	0.00	0.00	5.16	-0.94
4 c	0.72	-0.10	0.00	0.00	4.97	-1.26
4 right	-4.68	1.12	0.00	0.00	-0.25	0.04
5 left	-6.87	1.02	0.00	0.00	-0.06	0.13
5 a	-5.84	0.83	0.00	0.00	-0.04	0.10
5 b	-2.43	0.26	0.00	0.00	0.44	0.10
5 c	-0.33	0.03	0.00	0.00	0.12	0.01
6 a	-0.73	-0.46	0.00	0.00	1.77	-1.89
6 b	-0.25	-0.06	0.00	0.00	1.49	-1.53
6 c	0.82	1.25	0.00	0.00	0.05	-0.40
7 a	-1.34	0.48	0.00	0.00	0.64	-1.05
7 b	-0.79	0.78	0.00	0.00	0.56	-1.00
7 c	0.79	1.51	0.00	0.00	0.05	-0.39
8 top	-7.05	-4.04	0.00	0.00	6.54	-2.17
8 a	-6.42	-3.51	0.00	0.00	5.74	-1.92
8 b	-4.22	-1.54	0.00	0.00	3.25	-1.05
8 c	-2.02	0.16	0.00	0.00	1.15	-0.40
9 top	-0.24	-2.88	0.00	0.00	9.56	-1.44
9 a	-0.01	-2.46	0.00	0.00	8.48	-1.29
9 b	0.81	-0.88	0.00	0.00	4.68	-0.77
9 c	1.63	0.44	0.00	0.00	0.88	-0.27
10 top	0.24	-3.08	0.00	0.00	15.79	-0.72
10 a	0.04	-2.64	0.00	0.00	13.88	-0.61
10 b	-0.70	-1.02	0.00	0.00	7.50	-0.21
10 c	-1.43	0.37	0.00	0.00	1.55	-0.04
11 top	2.19	-3.37	0.00	0.00	6.55	-5.63
11 a	2.11	-2.91	0.00	0.00	5.62	-4.94
11 b	1.81	-1.21	0.00	0.00	2.55	-2.60
11 c	1.50	0.28	0.00	0.00	0.42	0.10

1_III_A_S5_EL.OUT 9/11/2009

VEH: S5 - SUPERLOAD BRUG(5.75.44) page 56
date 11/09/2009; time 13:25:18
Cline Avenue - Load Rating - Double Box - 4 Webs - 64.125' W

Summary of the results (Minimum)

Section	--- Deadload ----		----- P.T. ------		--- Live load ---	
	Moment	Ax.Frc	Moment	Ax.Frc	Moment	Ax.Frc
1 a	-3.62	0.38	0.00	0.00	-2.21	0.06
1 b	-7.10	0.87	0.00	0.00	-7.97	0.17
1 c	-11.87	1.64	0.00	0.00	-13.72	0.49
1 right	-13.22	1.88	0.00	0.00	-16.19	0.64
2 left	-6.17	2.62	0.00	0.00	-7.68	-0.40
2 a	-5.23	2.40	0.00	0.00	-6.76	-0.48
2 b	-0.39	1.21	0.00	0.00	-0.76	0.50
2 c	0.23	1.01	0.00	0.00	-0.91	0.69
2 right	-4.44	1.81	0.00	0.00	-7.14	-1.56
3 left	-4.19	2.08	0.00	0.00	-11.02	0.28
3 a	-3.38	1.87	0.00	0.00	-10.23	0.26
3 b	0.39	0.79	0.00	0.00	-3.37	0.15
3 c	0.56	0.67	0.00	0.00	-0.96	0.18
3 right	-4.71	1.53	0.00	0.00	-10.60	0.22
4 left	-4.95	1.28	0.00	0.00	-7.12	-1.69
4 a	-4.08	1.08	0.00	0.00	-6.27	-1.69
4 b	0.29	0.02	0.00	0.00	-1.04	0.79
4 c	0.72	-0.10	0.00	0.00	-0.88	0.56
4 right	-4.68	1.12	0.00	0.00	-7.60	-0.52
5 left	-6.87	1.02	0.00	0.00	-7.61	0.59
5 a	-5.84	0.83	0.00	0.00	-6.06	0.43
5 b	-2.43	0.26	0.00	0.00	-0.57	0.10
5 c	-0.33	0.03	0.00	0.00	-0.03	0.01
6 a	-0.73	-0.46	0.00	0.00	-0.57	0.11
6 b	-0.25	-0.06	0.00	0.00	-0.49	0.08
6 c	0.82	1.25	0.00	0.00	-0.10	1.59
7 a	-1.34	0.48	0.00	0.00	-1.54	1.78
7 b	-0.79	0.78	0.00	0.00	-1.34	1.67
7 c	0.79	1.51	0.00	0.00	-0.11	1.61
8 top	-7.05	-4.04	0.00	0.00	-15.30	-5.97
8 a	-6.42	-3.51	0.00	0.00	-13.22	-5.25
8 b	-4.22	-1.54	0.00	0.00	-6.62	-2.83
8 c	-2.02	0.16	0.00	0.00	-0.53	-0.88
9 top	-0.24	-2.88	0.00	0.00	-15.41	-0.78
9 a	-0.01	-2.46	0.00	0.00	-13.54	-0.66
9 b	0.81	-0.88	0.00	0.00	-7.32	-0.24
9 c	1.63	0.44	0.00	0.00	-1.52	-0.05
10 top	0.24	-3.08	0.00	0.00	-9.16	-1.39
10 a	0.04	-2.64	0.00	0.00	-8.13	-1.25
10 b	-0.70	-1.02	0.00	0.00	-4.49	-0.74
10 c	-1.43	0.37	0.00	0.00	-0.85	-0.26
11 top	2.19	-3.37	0.00	0.00	-6.51	-2.16
11 a	2.11	-2.91	0.00	0.00	-5.71	-1.92
11 b	1.81	-1.21	0.00	0.00	-3.25	-1.05
11 c	1.50	0.28	0.00	0.00	-1.17	-0.41

PtBridge, Inc. BRUG(5.75.44) page 55
date 11/09/2009; time 13:25:19
Cline Avenue - Load Rating - Double Box - 4 Webs - 64.125' W

Summary of the results (Maximum)

Section	--- Deadload ----		----- P.T. ------		--- Live load ---	
	Moment	Ax.Frc	Moment	Ax.Frc	Moment	Ax.Frc
1 a	-3.62	0.38	0.00	0.00	1.39	0.04
1 b	-7.10	0.87	0.00	0.00	1.15	0.11
1 c	-11.87	1.64	0.00	0.00	0.60	0.25
1 right	-13.22	1.88	0.00	0.00	0.31	0.38
2 left	-6.17	2.62	0.00	0.00	0.96	0.90
2 a	-5.23	2.40	0.00	0.00	1.57	0.43
2 b	-0.39	1.21	0.00	0.00	4.36	-0.31
2 c	0.23	1.01	0.00	0.00	4.73	-0.56
2 right	-4.44	1.81	0.00	0.00	1.72	0.58
3 left	-4.19	2.08	0.00	0.00	4.34	1.39
3 a	-3.38	1.87	0.00	0.00	5.39	1.02
3 b	0.39	0.79	0.00	0.00	4.62	0.22
3 c	0.56	0.67	0.00	0.00	4.34	0.06
3 right	-4.71	1.53	0.00	0.00	4.88	1.09
4 left	-4.95	1.28	0.00	0.00	1.40	0.62
4 a	-4.08	1.08	0.00	0.00	2.21	0.73
4 b	0.29	0.02	0.00	0.00	4.54	-0.35
4 c	0.72	-0.10	0.00	0.00	4.75	-0.86
4 right	-4.68	1.12	0.00	0.00	0.96	0.81
5 left	-6.87	1.02	0.00	0.00	0.30	0.30
5 a	-5.84	0.83	0.00	0.00	0.58	0.17
5 b	-2.43	0.26	0.00	0.00	1.01	0.02
5 c	-0.33	0.03	0.00	0.00	0.23	0.00
6 a	-0.73	-0.46	0.00	0.00	1.13	-0.85
6 b	-0.25	-0.06	0.00	0.00	0.95	-0.52
6 c	0.82	1.25	0.00	0.00	0.05	-0.27
7 a	-1.34	0.48	0.00	0.00	0.61	-0.67
7 b	-0.79	0.78	0.00	0.00	0.50	-0.47
7 c	0.79	1.51	0.00	0.00	0.03	-0.23
8 top	-7.05	-4.04	0.00	0.00	6.19	-4.96
8 a	-6.42	-3.51	0.00	0.00	5.22	-4.23
8 b	-4.22	-1.54	0.00	0.00	2.76	-1.53
8 c	-2.02	0.16	0.00	0.00	0.81	-0.52
9 top	-0.24	-2.88	0.00	0.00	7.62	-2.46
9 a	-0.01	-2.46	0.00	0.00	6.57	-2.16
9 b	0.81	-0.88	0.00	0.00	3.42	-1.14
9 c	1.63	0.44	0.00	0.00	0.57	-0.27
10 top	0.24	-3.08	0.00	0.00	11.66	-4.10
10 a	0.04	-2.64	0.00	0.00	10.02	-3.44
10 b	-0.70	-1.02	0.00	0.00	5.21	-1.42
10 c	-1.43	0.37	0.00	0.00	1.05	-0.47
11 top	2.19	-3.37	0.00	0.00	4.72	-3.54
11 a	2.11	-2.91	0.00	0.00	3.86	-3.02
11 b	1.81	-1.21	0.00	0.00	1.80	-1.40
11 c	1.50	0.28	0.00	0.00	0.32	-0.32

PtBridge, Inc. BRUG(5.75.44) page 56
date 11/09/2009; time 13:25:19
Cline Avenue - Load Rating - Double Box - 4 Webs - 64.125' W

Summary of the results (Minimum)

Section	--- Deadload ----		----- P.T. ------		--- Live load ---	
	Moment	Ax.Frc	Moment	Ax.Frc	Moment	Ax.Frc
1 a	-3.62	0.38	0.00	0.00	-1.24	0.09
1 b	-7.10	0.87	0.00	0.00	-6.73	0.28
1 c	-11.87	1.64	0.00	0.00	-11.33	0.87
1 right	-13.22	1.88	0.00	0.00	-13.83	1.41
2 left	-6.17	2.62	0.00	0.00	-8.90	1.50
2 a	-5.23	2.40	0.00	0.00	-6.95	-0.28
2 b	-0.39	1.21	0.00	0.00	-1.50	0.37
2 c	0.23	1.01	0.00	0.00	-0.86	0.68
2 right	-4.44	1.81	0.00	0.00	-8.05	-0.48
3 left	-4.19	2.08	0.00	0.00	-9.44	0.17
3 a	-3.38	1.87	0.00	0.00	-8.43	0.09
3 b	0.39	0.79	0.00	0.00	-2.08	-0.11
3 c	0.56	0.67	0.00	0.00	-0.79	0.04
3 right	-4.71	1.53	0.00	0.00	-9.20	0.20
4 left	-4.95	1.28	0.00	0.00	-8.08	-0.71
4 a	-4.08	1.08	0.00	0.00	-6.69	-0.79
4 b	0.29	0.02	0.00	0.00	-1.02	-0.77
4 c	0.72	-0.10	0.00	0.00	-0.60	0.30
4 right	-4.68	1.12	0.00	0.00	-8.79	1.08
5 left	-6.87	1.02	0.00	0.00	-8.06	1.09
5 a	-5.84	0.83	0.00	0.00	-6.06	0.75
5 b	-2.43	0.26	0.00	0.00	-0.70	0.13
5 c	-0.33	0.03	0.00	0.00	-0.03	0.01
6 a	-0.73	-0.46	0.00	0.00	-0.55	0.33
6 b	-0.25	-0.06	0.00	0.00	-0.47	0.33
6 c	0.82	1.25	0.00	0.00	-0.08	1.53
7 a	-1.34	0.48	0.00	0.00	-0.88	1.26
7 b	-0.79	0.78	0.00	0.00	-0.74	1.26
7 c	0.79	1.51	0.00	0.00	-0.08	1.54
8 top	-7.05	-4.04	0.00	0.00	-9.98	-6.69
8 a	-6.42	-3.51	0.00	0.00	-8.41	-5.70
8 b	-4.22	-1.54	0.00	0.00	-4.16	-2.62
8 c	-2.02	0.16	0.00	0.00	-0.69	-0.46
9 top	-0.24	-2.88	0.00	0.00	-11.39	-4.13
9 a	-0.01	-2.46	0.00	0.00	-9.78	-3.47
9 b	0.81	-0.88	0.00	0.00	-5.08	-1.44
9 c	1.63	0.44	0.00	0.00	-1.04	-0.47
10 top	0.24	-3.08	0.00	0.00	-7.39	-2.43
10 a	0.04	-2.64	0.00	0.00	-6.37	-2.13
10 b	-0.70	-1.02	0.00	0.00	-3.30	-1.12
10 c	-1.43	0.37	0.00	0.00	-0.55	-0.26
11 top	2.19	-3.37	0.00	0.00	-6.15	-3.73
11 a	2.11	-2.91	0.00	0.00	-5.20	-3.22
11 b	1.81	-1.21	0.00	0.00	-2.76	-1.54
11 c	1.50	0.28	0.00	0.00	-0.82	-0.61

VEH: HL93- TANDEM BRUG(5.75.44) page 55
date 11/09/2009; time 13:25:19
Cline Avenue - Load Rating - Double Box - 4 Webs - 64.125' W

Summary of the results (Maximum)

Section	--- Deadload ----		----- P.T. ------		--- Live load ---	
	Moment	Ax.Frc	Moment	Ax.Frc	Moment	Ax.Frc
1 a	-3.62	0.38	0.00	0.00	1.12	0.09
1 b	-7.10	0.87	0.00	0.00	0.68	0.31
1 c	-11.87	1.64	0.00	0.00	0.08	0.04
1 right	-13.22	1.88	0.00	0.00	0.11	0.05
2 left	-6.17	2.62	0.00	0.00	-0.09	0.00
2 a	-5.23	2.40	0.00	0.00	-0.09	0.00
2 b	-0.39	1.21	0.00	0.00	3.41	-0.10
2 c	0.23	1.01	0.00	0.00	4.46	-0.51
2 right	-4.44	1.81	0.00	0.00	-0.13	-0.24
3 left	-4.19	2.08	0.00	0.00	2.11	0.12
3 a	-3.38	1.87	0.00	0.00	2.06	1.20
3 b	0.39	0.79	0.00	0.00	3.93	0.12
3 c	0.56	0.67	0.00	0.00	4.12	-0.02
3 right	-4.71	1.53	0.00	0.00	2.08	1.10
4 left	-4.95	1.28	0.00	0.00	-0.34	0.27
4 a	-4.08	1.08	0.00	0.00	0.30	0.87
4 b	0.29	0.02	0.00	0.00	3.74	-0.56
4 c	0.72	-0.10	0.00	0.00	4.48	-0.77
4 right	-4.68	1.12	0.00	0.00	-0.05	0.00
5 left	-6.87	1.02	0.00	0.00	0.10	0.03
5 a	-5.84	0.83	0.00	0.00	0.08	0.02
5 b	-2.43	0.26	0.00	0.00	0.55	0.15
5 c	-0.33	0.03	0.00	0.00	0.17	0.01
6 a	-0.73	-0.46	0.00	0.00	0.87	-0.51
6 b	-0.25	-0.06	0.00	0.00	0.71	-0.11
6 c	0.82	1.25	0.00	0.00	0.04	-0.07
7 a	-1.34	0.48	0.00	0.00	0.52	-0.62
7 b	-0.79	0.78	0.00	0.00	0.40	-0.39
7 c	0.79	1.51	0.00	0.00	0.03	-0.15
8 top	-7.05	-4.04	0.00	0.00	6.06	-4.68
8 a	-6.42	-3.51	0.00	0.00	5.10	-4.11
8 b	-4.22	-1.54	0.00	0.00	2.55	-2.10
8 c	-2.02	0.16	0.00	0.00	0.64	-0.66
9 top	-0.24	-2.88	0.00	0.00	6.63	-3.32
9 a	-0.01	-2.46	0.00	0.00	5.63	-2.94
9 b	0.81	-0.88	0.00	0.00	2.75	-1.19
9 c	1.63	0.44	0.00	0.00	0.41	-0.24
10 top	0.24	-3.08	0.00	0.00	9.64	-3.88
10 a	0.04	-2.64	0.00	0.00	8.29	-3.61
10 b	-0.70	-1.02	0.00	0.00	4.18	-1.77
10 c	-1.43	0.37	0.00	0.00	0.81	-0.60
11 top	2.19	-3.37	0.00	0.00	3.33	-6.19
11 a	2.11	-2.91	0.00	0.00	2.79	-5.44
11 b	1.81	-1.21	0.00	0.00	1.24	-2.78
11 c	1.50	0.28	0.00	0.00	0.23	0.06

VEH: HL93- TANDEM BRUG(5.75.44) page 56
date 11/09/2009; time 13:25:19
Cline Avenue - Load Rating - Double Box - 4 Webs - 64.125' W

Summary of the results (Minimum)

Section	--- Deadload ----		----- P.T. ------		--- Live load ---	
	Moment	Ax.Frc	Moment	Ax.Frc	Moment	Ax.Frc
1 a	-3.62	0.38	0.00	0.00	-1.44	0.16
1 b	-7.10	0.87	0.00	0.00	-6.79	0.45
1 c	-11.87	1.64	0.00	0.00	-12.52	1.21
1 right	-13.22	1.88	0.00	0.00	-15.30	1.52
2 left	-6.17	2.62	0.00	0.00	-10.57	1.52
2 a	-5.23	2.40	0.00	0.00	-7.72	1.20
2 b	-0.39	1.21	0.00	0.00	-1.39	0.51
2 c	0.23	1.01	0.00	0.00	-0.76	0.61
2 right	-4.44	1.81	0.00	0.00	-9.13	0.84
3 left	-4.19	2.08	0.00	0.00	-8.85	0.25
3 a	-3.38	1.87	0.00	0.00	-7.73	0.02
3 b	0.39	0.79	0.00	0.00	-1.40	-0.11
3 c	0.56	0.67	0.00	0.00	-0.70	0.04
3 right	-4.71	1.53	0.00	0.00	-8.69	0.19
4 left	-4.95	1.28	0.00	0.00	-9.16	0.65
4 a	-4.08	1.08	0.00	0.00	-7.25	-0.02
4 b	0.29	0.02	0.00	0.00	-0.71	-0.48
4 c	0.72	-0.10	0.00	0.00	-0.47	0.22
4 right	-4.68	1.12	0.00	0.00	-10.41	1.10
5 left	-6.87	1.02	0.00	0.00	-9.14	1.20
5 a	-5.84	0.83	0.00	0.00	-7.05	0.91
5 b	-2.43	0.26	0.00	0.00	-0.67	0.23
5 c	-0.33	0.03	0.00	0.00	-0.06	0.02
6 a	-0.73	-0.46	0.00	0.00	-0.43	0.51
6 b	-0.25	-0.06	0.00	0.00	-0.36	0.26
6 c	0.82	1.25	0.00	0.00	-0.06	1.61
7 a	-1.34	0.48	0.00	0.00	-0.64	1.38
7 b	-0.79	0.78	0.00	0.00	-0.52	1.48
7 c	0.79	1.51	0.00	0.00	-0.06	1.62
8 top	-7.05	-4.04	0.00	0.00	-9.45	-6.35
8 a	-6.42	-3.51	0.00	0.00	-7.95	-5.59
8 b	-4.22	-1.54	0.00	0.00	-3.79	-2.89
8 c	-2.02	0.16	0.00	0.00	-0.54	-0.71
9 top	-0.24	-2.88	0.00	0.00	-9.27	-2.77
9 a	-0.01	-2.46	0.00	0.00	-8.12	-3.63
9 b	0.81	-0.88	0.00	0.00	-4.10	-1.78
9 c	1.63	0.44	0.00	0.00	-0.79	-0.61
10 top	0.24	-3.08	0.00	0.00	-6.48	-3.30
10 a	0.04	-2.64	0.00	0.00	-5.49	-2.92
10 b	-0.70	-1.02	0.00	0.00	-2.68	-1.18
10 c	-1.43	0.37	0.00	0.00	-0.40	-0.25
11 top	2.19	-3.37	0.00	0.00	-6.06	-4.65
11 a	2.11	-2.91	0.00	0.00	-5.10	-4.10
11 b	1.81	-1.21	0.00	0.00	-2.55	-2.10
11 c	1.50	0.28	0.00	0.00	-0.65	-0.66

VEH: R1 - TOLL ROAD BRUG(5.75.44) page 55
date 11/09/2009; time 13:25:20
Cline Avenue - Load Rating - Double Box - 4 Webs - 64.125' W

Summary of the results (Maximum)

Section	--- Deadload ----		----- P.T. ------		--- Live load ---	
	Moment	Ax.Frc	Moment	Ax.Frc	Moment	Ax.Frc
1 a	-3.62	0.38	0.00	0.00	0.57	0.13
1 b	-7.10	0.87	0.00	0.00	0.39	0.32
1 c	-11.87	1.64	0.00	0.00	0.03	0.09
1 right	-13.22	1.88	0.00	0.00	0.04	0.10
2 left	-6.17	2.62	0.00	0.00	-0.15	0.00
2 a	-5.23	2.40	0.00	0.00	0.44	1.56
2 b	-0.39	1.21	0.00	0.00	3.61	-0.09
2 c	0.23	1.01	0.00	0.00	4.40	-0.63
2 right	-4.44	1.81	0.00	0.00	1.20	1.08
3 left	-4.19	2.08	0.00	0.00	6.12	1.26
3 a	-3.38	1.87	0.00	0.00	6.67	1.07
3 b	0.39	0.79	0.00	0.00	4.20	0.28
3 c	0.56	0.67	0.00	0.00	4.03	0.19
3 right	-4.71	1.53	0.00	0.00	6.70	0.90
4 left	-4.95	1.28	0.00	0.00	1.20	1.01
4 a	-4.08	1.08	0.00	0.00	1.76	0.70
4 b	0.29	0.02	0.00	0.00	4.04	-0.79
4 c	0.72	-0.10	0.00	0.00	4.43	-1.00
4 right	-4.68	1.12	0.00	0.00	-0.10	0.00
5 left	-6.87	1.02	0.00	0.00	0.04	0.06
5 a	-5.84	0.83	0.00	0.00	0.03	0.05
5 b	-2.43	0.26	0.00	0.00	0.33	0.11
5 c	-0.33	0.03	0.00	0.00	0.08	0.01
6 a	-0.73	-0.46	0.00	0.00	1.35	-0.87
6 b	-0.25	-0.06	0.00	0.00	1.14	-0.49
6 c	0.82	1.25	0.00	0.00	0.06	-0.22
7 a	-1.34	0.48	0.00	0.00	0.73	-0.80
7 b	-0.79	0.78	0.00	0.00	0.61	-0.60
7 c	0.79	1.51	0.00	0.00	0.04	-0.28
8 top	-7.05	-4.04	0.00	0.00	6.85	-3.51
8 a	-6.42	-3.51	0.00	0.00	5.98	-3.08
8 b	-4.22	-1.54	0.00	0.00	3.33	-1.57
8 c	-2.02	0.16	0.00	0.00	1.01	-0.52
9 top	-0.24	-2.88	0.00	0.00	8.87	-2.23
9 a	-0.01	-2.46	0.00	0.00	7.77	-1.98
9 b	0.81	-0.88	0.00	0.00	4.15	-1.11
9 c	1.63	0.44	0.00	0.00	0.71	-0.30
10 top	0.24	-3.08	0.00	0.00	13.51	-2.27
10 a	0.04	-2.64	0.00	0.00	11.83	-1.95
10 b	-0.70	-1.02	0.00	0.00	6.33	-0.93
10 c	-1.43	0.37	0.00	0.00	1.31	-0.32
11 top	2.19	-3.37	0.00	0.00	4.39	-4.36
11 a	2.11	-2.91	0.00	0.00	3.77	-3.81
11 b	1.81	-1.21	0.00	0.00	1.76	-1.95
11 c	1.50	0.28	0.00	0.00	0.38	0.09

VEH: R1 - TOLL ROAD BRUG(5.75.44) page 56
date 11/09/2009; time 13:25:20
Cline Avenue - Load Rating - Double Box - 4 Webs - 64.125' W

Summary of the results (Minimum)

Section	--- Deadload ----		----- P.T. ------		--- Live load ---	
	Moment	Ax.Frc	Moment	Ax.Frc	Moment	Ax.Frc
1 a	-3.62	0.38	0.00	0.00	-1.93	0.20
1 b	-7.10	0.87	0.00	0.00	-6.52	0.49
1 c	-11.87	1.64	0.00	0.00	-11.58	1.06
1 right	-13.22	1.88	0.00	0.00	-13.75	1.28
2 left	-6.17	2.62	0.00	0.00	-7.88	0.01
2 a	-5.23	2.40	0.00	0.00	-6.64	-0.35
2 b	-0.39	1.21	0.00	0.00	-1.17	0.92
2 c	0.23	1.01	0.00	0.00	-1.01	0.84
2 right	-4.44	1.81	0.00	0.00	-7.44	-0.70
3 left	-4.19	2.08	0.00	0.00	-10.30	0.16
3 a	-3.38	1.87	0.00	0.00	-9.25	0.12
3 b	0.39	0.79	0.00	0.00	-2.57	-0.13
3 c	0.56	0.67	0.00	0.00	-0.97	0.04
3 right	-4.71	1.53	0.00	0.00	-10.01	0.20
4 left	-4.95	1.28	0.00	0.00	-7.49	-1.13
4 a	-4.08	1.08	0.00	0.00	-5.91	-1.18
4 b	0.29	0.02	0.00	0.00	-0.82	0.55
4 c	0.72	-0.10	0.00	0.00	-0.73	0.36
4 right	-4.68	1.12	0.00	0.00	-7.77	-0.30
5 left	-6.87	1.02	0.00	0.00	-6.64	0.82
5 a	-5.84	0.83	0.00	0.00	-5.23	0.62
5 b	-2.43	0.26	0.00	0.00	-0.59	0.16
5 c	-0.33	0.03	0.00	0.00	-0.03	0.01
6 a	-0.73	-0.46	0.00	0.00	-0.68	0.40
6 b	-0.25	-0.06	0.00	0.00	-0.58	0.40
6 c	0.82	1.25	0.00	0.00	-0.09	1.81
7 a	-1.34	0.48	0.00	0.00	-1.00	1.88
7 b	-0.79	0.78	0.00	0.00	-0.85	1.92
7 c	0.79	1.51	0.00	0.00	-0.09	1.82
8 top	-7.05	-4.04	0.00	0.00	-11.25	-4.62
8 a	-6.42	-3.51	0.00	0.00	-9.75	-4.05
8 b	-4.22	-1.54	0.00	0.00	-5.04	-2.08
8 c	-2.02	0.16	0.00	0.00	-0.83	-0.56
9 top	-0.24	-2.88	0.00	0.00	-13.17	-2.47
9 a	-0.01	-2.46	0.00	0.00	-11.54	-2.12
9 b	0.81	-0.88	0.00	0.00	-6.18	-0.95
9 c	1.63	0.44	0.00	0.00	-1.29	-0.33
10 top	0.24	-3.08	0.00	0.00	-8.59	-2.19
10 a	0.04	-2.64	0.00	0.00	-7.52	-1.95
10 b	-0.70	-1.02	0.00	0.00	-4.01	-1.09
10 c	-1.43	0.37	0.00	0.00	-0.68	-0.29
11 top	2.19	-3.37	0.00	0.00	-6.80	-3.50
11 a	2.11	-2.91	0.00	0.00	-5.94	-3.07
11 b	1.81	-1.21	0.00	0.00	-3.31	-1.58
11 c	1.50	0.28	0.00	0.00	-1.03	-0.53

VEH: R2 - TOLL ROAD BRUG(5.75.44) page 55
date 11/09/2009; time 13:25:21
Cline Avenue - Load Rating - Double Box - 4 Webs - 64.125' W

Summary of the results (Maximum)

Section	--- Deadload ----		----- P.T. ------		--- Live load ---	
	Moment	Ax.Frc	Moment	Ax.Frc	Moment	Ax.Frc
1 a	-3.62	0.38	0.00	0.00	0.90	0.10
1 b	-7.10	0.87	0.00	0.00	0.70	0.23
1 c	-11.87	1.64	0.00	0.00	0.01	0.09
1 right	-13.22	1.88	0.00	0.00	0.01	0.11
2 left	-6.17	2.62	0.00	0.00	-0.14	0.01
2 a	-5.23	2.40	0.00	0.00	0.98	1.31
2 b	-0.39	1.21	0.00	0.00	3.45	-0.12
2 c	0.23	1.01	0.00	0.00	4.16	-0.59
2 right	-4.44	1.81	0.00	0.00	1.33	0.98
3 left	-4.19	2.08	0.00	0.00	6.79	1.12
3 a	-3.38	1.87	0.00	0.00	6.75	0.91
3 b	0.39	0.79	0.00	0.00	4.10	0.25
3 c	0.56	0.67	0.00	0.00	3.80	0.16
3 right	-4.71	1.53	0.00	0.00	6.86	0.85
4 left	-4.95	1.28	0.00	0.00	1.33	0.91
4 a	-4.08	1.08	0.00	0.00	2.08	0.53
4 b	0.29	0.02	0.00	0.00	3.82	-0.76
4 c	0.72	-0.10	0.00	0.00	4.19	-0.90
4 right	-4.68	1.12	0.00	0.00	-0.10	0.01
5 left	-6.87	1.02	0.00	0.00	0.01	0.06
5 a	-5.84	0.83	0.00	0.00	0.01	0.05
5 b	-2.43	0.26	0.00	0.00	0.65	0.07
5 c	-0.33	0.03	0.00	0.00	0.14	0.00
6 a	-0.73	-0.46	0.00	0.00	1.24	-0.78
6 b	-0.25	-0.06	0.00	0.00	1.05	-0.46
6 c	0.82	1.25	0.00	0.00	0.05	-0.19
7 a	-1.34	0.48	0.00	0.00	0.65	-0.69
7 b	-0.79	0.78	0.00	0.00	0.55	-0.53
7 c	0.79	1.51	0.00	0.00	0.04	-0.27
8 top	-7.05	-4.04	0.00	0.00	5.88	-3.69
8 a	-6.42	-3.51	0.00	0.00	5.06	-1.35
8 b	-4.22	-1.54	0.00	0.00	2.82	-1.41
8 c	-2.02	0.16	0.00	0.00	0.89	-0.45
9 top	-0.24	-2.88	0.00	0.00	8.14	-2.03
9 a	-0.01	-2.46	0.00	0.00	7.11	-1.79
9 b	0.81	-0.88	0.00	0.00	3.80	-0.83
9 c	1.63	0.44	0.00	0.00	0.66	-0.27
10 top	0.24	-3.08	0.00	0.00	12.49	-2.42
10 a	0.04	-2.64	0.00	0.00	10.85	-1.98
10 b	-0.70	-1.02	0.00	0.00	5.81	-0.78
10 c	-1.43	0.37	0.00	0.00	1.19	-0.25
11 top	2.19	-3.37	0.00	0.00	3.91	-4.84
11 a	2.11	-2.91	0.00	0.00	3.35	-4.05
11 b	1.81	-1.21	0.00	0.00	1.56	-1.79
11 c	1.50	0.28	0.00	0.00	0.35	0.09

VEH: R2 - TOLL ROAD BRUG(5.75.44) page 56
date 11/09/2009; time 13:25:21
Cline Avenue - Load Rating - Double Box - 4 Webs - 64.125' W

Summary of the results (Minimum)

Section	--- Deadload ----		----- P.T. ------		--- Live load ---	
	Moment	Ax.Frc	Moment	Ax.Frc	Moment	Ax.Frc
1 a	-3.62	0.38	0.00	0.00	-1.15	0.15
1 b	-7.10	0.87	0.00	0.00	-5.46	0.35
1 c	-11.87	1.64	0.00	0.00	-9.33	0.84
1 right	-13.22	1.88	0.00	0.00	-11.54	1.10
2 left	-6.17	2.62	0.00	0.00	-6.75	0.03
2 a	-5.23	2.40	0.00	0.00	-5.73	-0.31
2 b	-0.39	1.21	0.00	0.00	-0.90	0.09
2 c	0.23	1.01	0.00	0.00	-0.84	0.72
2 right	-4.44	1.81	0.00	0.00	-6.28	-0.70
3 left	-4.19	2.08	0.00	0.00	-9.33	0.16
3 a	-3.38	1.87	0.00	0.00	-8.42	0.06
3 b	0.39	0.79	0.00	0.00	-2.48	-0.09
3 c	0.56	0.67	0.00	0.00	-0.83	0.04
3 right	-4.71	1.53	0.00	0.00	-9.05	0.18
4 left	-4.95	1.28	0.00	0.00	-6.33	-1.07
4 a	-4.08	1.08	0.00	0.00	-4.67	-1.14
4 b	0.29	0.02	0.00	0.00	-0.75	0.52
4 c	0.72	-0.10	0.00	0.00	-0.68	0.36
4 right	-4.68	1.12	0.00	0.00	-6.66	-0.22
5 left	-6.87	1.02	0.00	0.00	-5.86	0.76
5 a	-5.84	0.83	0.00	0.00	-4.50	0.52
5 b	-2.43	0.26	0.00	0.00	-0.17	0.11
5 c	-0.33	0.03	0.00	0.00	-0.02	0.01
6 a	-0.73	-0.46	0.00	0.00	-0.62	0.37
6 b	-0.25	-0.06	0.00	0.00	-0.53	0.37
6 c	0.82	1.25	0.00	0.00	-0.08	1.50
7 a	-1.34	0.48	0.00	0.00	-0.93	1.70
7 b	-0.79	0.78	0.00	0.00	-0.80	1.71
7 c	0.79	1.51	0.00	0.00	-0.08	1.51
8 top	-7.05	-4.04	0.00	0.00	-9.75	-4.87
8 a	-6.42	-3.51	0.00	0.00	-8.33	-4.11
8 b	-4.22	-1.54	0.00	0.00	-4.30	-1.85
8 c	-2.02	0.16	0.00	0.00	-0.69	-0.48
9 top	-0.24	-2.88	0.00	0.00	-12.17	-2.67
9 a	-0.01	-2.46	0.00	0.00	-10.57	-2.19
9 b	0.81	-0.88	0.00	0.00	-5.67	-0.80
9 c	1.63	0.44	0.00	0.00	-1.17	-0.26
10 top	0.24	-3.08	0.00	0.00	-7.86	-1.99
10 a	0.04	-2.64	0.00	0.00	-6.86	-1.76
10 b	-0.70	-1.02	0.00	0.00	-3.66	-0.81
10 c	-1.43	0.37	0.00	0.00	-0.64	-0.26
11 top	2.19	-3.37	0.00	0.00	-5.83	-3.69
11 a	2.11	-2.91	0.00	0.00	-5.03	-3.12
11 b	1.81	-1.21	0.00	0.00	-2.81	-1.42
11 c	1.50	0.28	0.00	0.00	-0.91	-0.47

VEH: R3 - TOLL ROAD BRUG(5.75.44) page 55
date 11/09/2009; time 13:25:21
Cline Avenue - Load Rating - Double Box - 4 Webs - 64.125' W

Summary of the results (Maximum)

Section	--- Deadload ----		----- P.T. ------		--- Live load ---	
	Moment	Ax.Frc	Moment	Ax.Frc	Moment	Ax.Frc
1 a	-3.62	0.38	0.00	0.00	0.75	0.04
1 b	-7.10	0.87	0.00	0.00	0.50	0.15
1 c	-11.87	1.64	0.00	0.00	0.00	0.12
1 right	-13.22	1.88	0.00	0.00	0.01	0.13
2 left	-6.17	2.62	0.00	0.00	-0.17	0.04
2 a	-5.23	2.40	0.00	0.00	0.71	1.26
2 b	-0.39	1.21	0.00	0.00	3.44	-0.28
2 c	0.23	1.01	0.00	0.00	4.08	-0.81
2 right	-4.44	1.81	0.00	0.00	1.09	0.74
3 left	-4.19	2.08	0.00	0.00	8.08	0.94
3 a	-3.38	1.87	0.00	0.00	7.97	0.79
3 b	0.39	0.79	0.00	0.00	4.35	0.15
3 c	0.56	0.67	0.00	0.00	3.78	-0.02
3 right	-4.71	1.53	0.00	0.00	8.42	0.75
4 left	-4.95	1.28	0.00	0.00	1.09	0.67
4 a	-4.08	1.08	0.00	0.00	1.77	0.33
4 b	0.29	0.02	0.00	0.00	3.84	-0.99
4 c	0.72	-0.10	0.00	0.00	4.11	-1.04
4 right	-4.68	1.12	0.00	0.00	-0.13	0.01
5 left	-6.87	1.02	0.00	0.00	0.01	0.07
5 a	-5.84	0.83	0.00	0.00	0.01	0.06
5 b	-2.43	0.26	0.00	0.00	0.42	0.07
5 c	-0.33	0.03	0.00	0.00	0.12	0.00
6 a	-0.73	-0.46	0.00	0.00	1.36	-0.76
6 b	-0.25	-0.06	0.00	0.00	1.16	-0.42
6 c	0.82	1.25	0.00	0.00	0.05	-0.37
7 a	-1.34	0.48	0.00	0.00	0.69	-1.02
7 b	-0.79	0.78	0.00	0.00	0.58	-0.94
7 c	0.79	1.51	0.00	0.00	0.05	-0.35
8 top	-7.05	-4.04	0.00	0.00	5.80	-1.81
8 a	-6.42	-3.51	0.00	0.00	5.02	-1.59
8 b	-4.22	-1.54	0.00	0.00	2.67	-1.62
8 c	-2.02	0.16	0.00	0.00	0.89	-0.54
9 top	-0.24	-2.88	0.00	0.00	9.35	-2.05
9 a	-0.01	-2.46	0.00	0.00	8.19	-1.77
9 b	0.81	-0.88	0.00	0.00	4.40	-0.98
9 c	1.63	0.44	0.00	0.00	0.81	-0.26
10 top	0.24	-3.08	0.00	0.00	14.28	-2.04
10 a	0.04	-2.64	0.00	0.00	12.46	-1.75
10 b	-0.70	-1.02	0.00	0.00	6.59	-0.81
10 c	-1.43	0.37	0.00	0.00	1.28	-0.28
11 top	2.19	-3.37	0.00	0.00	4.05	-4.49
11 a	2.11	-2.91	0.00	0.00	3.45	-3.94
11 b	1.81	-1.21	0.00	0.00	1.56	-2.04
11 c	1.50	0.28	0.00	0.00	0.40	0.10

VEH: R3 - TOLL ROAD BRUG(5.75.44) page 56
date 11/09/2009; time 13:25:21
Cline Avenue - Load Rating - Double Box - 4 Webs - 64.125' W

Summary of the results (Minimum)

Section	--- Deadload ----		----- P.T. ------		--- Live load ---	
	Moment	Ax.Frc	Moment	Ax.Frc	Moment	Ax.Frc
1 a	-3.62	0.38	0.00	0.00	-1.28	0.09
1 b	-7.10	0.87	0.00	0.00	-5.39	0.26
1 c	-11.87	1.64	0.00	0.00	-9.78	0.73
1 right	-13.22	1.88	0.00	0.00	-11.90	0.94
2 left	-6.17	2.62	0.00	0.00	-7.04	0.00
2 a	-5.23	2.40	0.00	0.00	-6.09	-0.34
2 b	-0.39	1.21	0.00	0.00	-0.96	-0.25
2 c	0.23	1.01	0.00	0.00	-0.85	0.53
2 right	-4.44	1.81	0.00	0.00	-6.34	-1.03
3 left	-4.19	2.08	0.00	0.00	-10.83	0.15
3 a	-3.38	1.87	0.00	0.00	-9.89	0.11
3 b	0.39	0.79	0.00	0.00	-3.00	0.01
3 c	0.56	0.67	0.00	0.00	-0.81	0.12
3 right	-4.71	1.53	0.00	0.00	-10.46	0.15
4 left	-4.95	1.28	0.00	0.00	-6.39	-1.30
4 a	-4.08	1.08	0.00	0.00	-4.96	-1.34
4 b	0.29	0.02	0.00	0.00	-1.00	-0.06
4 c	0.72	-0.10	0.00	0.00	-0.81	0.47
4 right	-4.68	1.12	0.00	0.00	-6.95	-0.19
5 left	-6.87	1.02	0.00	0.00	-6.52	0.74
5 a	-5.84	0.83	0.00	0.00	-5.03	0.55
5 b	-2.43	0.26	0.00	0.00	-0.44	0.13
5 c	-0.33	0.03	0.00	0.00	-0.02	0.01
6 a	-0.73	-0.46	0.00	0.00	-0.63	0.37
6 b	-0.25	-0.06	0.00	0.00	-0.54	0.36
6 c	0.82	1.25	0.00	0.00	-0.09	1.52
7 a	-1.34	0.48	0.00	0.00	-1.08	1.94
7 b	-0.79	0.78	0.00	0.00	-0.92	1.92
7 c	0.79	1.51	0.00	0.00	-0.09	1.53
8 top	-7.05	-4.04	0.00	0.00	-9.58	-4.59
8 a	-6.42	-3.51	0.00	0.00	-8.19	-4.04
8 b	-4.22	-1.54	0.00	0.00	-4.09	-2.09
8 c	-2.02	0.16	0.00	0.00	-0.56	-0.56
9 top	-0.24	-2.88	0.00	0.00	-13.89	-2.25
9 a	-0.01	-2.46	0.00	0.00	-12.11	-1.94
9 b	0.81	-0.88	0.00	0.00	-6.41	-0.83
9 c	1.63	0.44	0.00	0.00	-1.25	-0.29
10 top	0.24	-3.08	0.00	0.00	-8.99	-2.00
10 a	0.04	-2.64	0.00	0.00	-7.88	-1.73
10 b	-0.70	-1.02	0.00	0.00	-4.23	-0.95
10 c	-1.43	0.37	0.00	0.00	-0.78	-0.25
11 top	2.19	-3.37	0.00	0.00	-5.75	-1.80
11 a	2.11	-2.91	0.00	0.00	-4.98	-1.59
11 b	1.81	-1.21	0.00	0.00	-2.65	-1.62
11 c	1.50	0.28	0.00	0.00	-0.91	-0.55

VEH: R4 - MICHIGAN T BRUG(5.75.44) page 55
date 11/09/2009; time 13:25:22
Cline Avenue - Load Rating - Double Box - 4 Webs - 64.125' W

Summary of the results (Maximum)

Section	--- Deadload ----		----- P.T. ------		--- Live load ---	
	Moment	Ax.Frc	Moment	Ax.Frc	Moment	Ax.Frc
1 a	-3.62	0.38	0.00	0.00	0.59	0.08
1 b	-7.10	0.87	0.00	0.00	0.51	0.15
1 c	-11.87	1.64	0.00	0.00	0.24	0.39
1 right	-13.22	1.88	0.00	0.00	0.05	0.53
2 left	-6.17	2.62	0.00	0.00	1.05	1.70
2 a	-5.23	2.40	0.00	0.00	1.94	1.35
2 b	-0.39	1.21	0.00	0.00	3.73	-0.20
2 c	0.23	1.01	0.00	0.00	4.27	-0.79
2 right	-4.44	1.81	0.00	0.00	2.44	0.83
3 left	-4.19	2.08	0.00	0.00	10.42	1.03
3 a	-3.38	1.87	0.00	0.00	9.95	0.86
3 b	0.39	0.79	0.00	0.00	4.63	0.33
3 c	0.56	0.67	0.00	0.00	3.89	0.21
3 right	-4.71	1.53	0.00	0.00	10.84	0.72
4 left	-4.95	1.28	0.00	0.00	2.44	0.73
4 a	-4.08	1.08	0.00	0.00	3.04	0.33
4 b	0.29	0.02	0.00	0.00	4.19	-1.05
4 c	0.72	-0.10	0.00	0.00	4.30	-1.15
4 right	-4.68	1.12	0.00	0.00	0.13	1.10
5 left	-6.87	1.02	0.00	0.00	0.05	0.36
5 a	-5.84	0.83	0.00	0.00	0.24	0.22
5 b	-2.43	0.26	0.00	0.00	0.48	0.03
5 c	-0.33	0.03	0.00	0.00	0.09	0.00
6 a	-0.73	-0.46	0.00	0.00	1.66	-1.03
6 b	-0.25	-0.06	0.00	0.00	1.42	-0.70
6 c	0.82	1.25	0.00	0.00	0.06	-0.42
7 a	-1.34	0.48	0.00	0.00	0.83	-0.83
7 b	-0.79	0.78	0.00	0.00	0.71	-0.71
7 c	0.79	1.51	0.00	0.00	0.06	-0.40
8 top	-7.05	-4.04	0.00	0.00	7.00	-2.10
8 a	-6.42	-3.51	0.00	0.00	6.17	-1.81
8 b	-4.22	-1.54	0.00	0.00	3.31	-0.63
8 c	-2.02	0.16	0.00	0.00	1.15	-0.43
9 top	-0.24	-2.88	0.00	0.00	10.76	-1.93
9 a	-0.01	-2.46	0.00	0.00	9.51	-1.73
9 b	0.81	-0.88	0.00	0.00	5.19	-0.97
9 c	1.63	0.44	0.00	0.00	0.93	-0.31
10 top	0.24	-3.08	0.00	0.00	16.25	-1.38
10 a	0.04	-2.64	0.00	0.00	14.29	-1.06
10 b	-0.70	-1.02	0.00	0.00	7.74	-0.23
10 c	-1.43	0.37	0.00	0.00	1.58	-0.09
11 top	2.19	-3.37	0.00	0.00	4.80	-3.79
11 a	2.11	-2.91	0.00	0.00	4.14	-3.16
11 b	1.81	-1.21	0.00	0.00	1.95	-1.42
11 c	1.50	0.28	0.00	0.00	0.48	0.12

VEH: R4 - MICHIGAN T BRUG(5.75.44) page 56
date 11/09/2009; time 13:25:22
Cline Avenue - Load Rating - Double Box - 4 Webs - 64.125' W

Summary of the results (Minimum)

Section	--- Deadload ----		----- P.T. ------		--- Live load ---	
	Moment	Ax.Frc	Moment	Ax.Frc	Moment	Ax.Frc
1 a	-3.62	0.38	0.00	0.00	-1.46	0.14
1 b	-7.10	0.87	0.00	0.00	-5.40	0.30
1 c	-11.87	1.64	0.00	0.00	-9.11	0.73
1 right	-13.22	1.88	0.00	0.00	-11.00	0.96
2 left	-6.17	2.62	0.00	0.00	-7.22	-0.30
2 a	-5.23	2.40	0.00	0.00	-6.13	-0.36
2 b	-0.39	1.21	0.00	0.00	-1.18	0.15
2 c	0.23	1.01	0.00	0.00	-0.98	0.55
2 right	-4.44	1.81	0.00	0.00	-6.09	-1.36
3 left	-4.19	2.08	0.00	0.00	-12.12	0.11
3 a	-3.38	1.87	0.00	0.00	-11.15	0.00
3 b	0.39	0.79	0.00	0.00	-3.56	-0.06
3 c	0.56	0.67	0.00	0.00	-0.98	0.07
3 right	-4.71	1.53	0.00	0.00	-11.66	0.17
4 left	-4.95	1.28	0.00	0.00	-6.08	-1.64
4 a	-4.08	1.08	0.00	0.00	-4.56	-1.66
4 b	0.29	0.02	0.00	0.00	-1.08	0.73
4 c	0.72	-0.10	0.00	0.00	-0.94	0.52
4 right	-4.68	1.12	0.00	0.00	-7.13	-0.55
5 left	-6.87	1.02	0.00	0.00	-4.79	0.54
5 a	-5.84	0.83	0.00	0.00	-3.75	0.36
5 b	-2.43	0.26	0.00	0.00	-0.20	0.08
5 c	-0.33	0.03	0.00	0.00	-0.01	0.01
6 a	-0.73	-0.46	0.00	0.00	-0.81	0.50
6 b	-0.25	-0.06	0.00	0.00	-0.70	0.48
6 c	0.82	1.25	0.00	0.00	-0.11	1.66
7 a	-1.34	0.48	0.00	0.00	-1.27	2.18
7 b	-0.79	0.78	0.00	0.00	-1.10	2.14
7 c	0.79	1.51	0.00	0.00	-0.11	1.68
8 top	-7.05	-4.04	0.00	0.00	-11.10	-3.92
8 a	-6.42	-3.51	0.00	0.00	-9.65	-3.30
8 b	-4.22	-1.54	0.00	0.00	-5.11	-1.50
8 c	-2.02	0.16	0.00	0.00	-0.82	-0.44
9 top	-0.24	-2.88	0.00	0.00	-15.89	-0.54
9 a	-0.01	-2.46	0.00	0.00	-13.86	-1.24
9 b	0.81	-0.88	0.00	0.00	-7.53	-0.31
9 c	1.63	0.44	0.00	0.00	-1.55	-0.10
10 top	0.24	-3.08	0.00	0.00	-10.34	-1.88
10 a	0.04	-2.64	0.00	0.00	-9.14	-1.68
10 b	-0.70	-1.02	0.00	0.00	-4.99	-0.94
10 c	-1.43	0.37	0.00	0.00	-0.90	-0.30
11 top	2.19	-3.37	0.00	0.00	-6.92	-2.09
11 a	2.11	-2.91	0.00	0.00	-6.11	-1.81
11 b	1.81	-1.21	0.00	0.00	-3.29	-0.64
11 c	1.50	0.28	0.00	0.00	-1.17	-0.43

VEH: R5 - MICHIGAN T BRUG(5.75.44) page 55
date 11/09/2009; time 13:25:23
Cline Avenue - Load Rating - Double Box - 4 Webs - 64.125' W

Summary of the results (Maximum)

Section	--- Deadload ----		----- P.T. ------		--- Live load ---	
	Moment	Ax.Frc	Moment	Ax.Frc	Moment	Ax.Frc
1 a	-3.62	0.38	0.00	0.00	0.24	0.11
1 b	-7.10	0.87	0.00	0.00	0.12	0.35
1 c	-11.87	1.64	0.00	0.00	0.01	0.14
1 right	-13.22	1.88	0.00	0.00	0.01	0.16
2 left	-6.17	2.62	0.00	0.00	0.25	1.96
2 a	-5.23	2.40	0.00	0.00	1.03	1.66
2 b	-0.39	1.21	0.00	0.00	4.02	-0.19
2 c	0.23	1.01	0.00	0.00	4.68	-0.87
2 right	-4.44	1.81	0.00	0.00	2.02	0.97
3 left	-4.19	2.08	0.00	0.00	10.09	1.18
3 a	-3.38	1.87	0.00	0.00	9.59	1.08
3 b	0.39	0.79	0.00	0.00	4.72	0.33
3 c	0.56	0.67	0.00	0.00	4.31	0.19
3 right	-4.71	1.53	0.00	0.00	10.29	0.82
4 left	-4.95	1.28	0.00	0.00	2.02	0.86
4 a	-4.08	1.08	0.00	0.00	2.43	0.55
4 b	0.29	0.02	0.00	0.00	4.55	-1.10
4 c	0.72	-0.10	0.00	0.00	4.71	-1.28
4 right	-4.68	1.12	0.00	0.00	-0.15	0.01
5 left	-6.87	1.02	0.00	0.00	0.01	0.09
5 a	-5.84	0.83	0.00	0.00	0.01	0.08
5 b	-2.43	0.26	0.00	0.00	0.07	0.13
5 c	-0.33	0.03	0.00	0.00	0.03	0.01
6 a	-0.73	-0.46	0.00	0.00	1.76	-1.10
6 b	-0.25	-0.06	0.00	0.00	1.50	-0.67
6 c	0.82	1.25	0.00	0.00	0.07	-0.26
7 a	-1.34	0.48	0.00	0.00	0.92	-0.97
7 b	-0.79	0.78	0.00	0.00	0.77	-0.74
7 c	0.79	1.51	0.00	0.00	0.06	-0.38
8 top	-7.05	-4.04	0.00	0.00	7.92	-1.86
8 a	-6.42	-3.51	0.00	0.00	6.96	-1.65
8 b	-4.22	-1.54	0.00	0.00	3.88	-1.55
8 c	-2.02	0.16	0.00	0.00	1.25	-0.55
9 top	-0.24	-2.88	0.00	0.00	11.44	-2.21
9 a	-0.01	-2.46	0.00	0.00	10.09	-1.98
9 b	0.81	-0.88	0.00	0.00	5.47	-1.16
9 c	1.63	0.44	0.00	0.00	0.95	-0.36
10 top	0.24	-3.08	0.00	0.00	17.50	-1.40
10 a	0.04	-2.64	0.00	0.00	15.42	-1.23
10 b	-0.70	-1.02	0.00	0.00	8.32	-0.60
10 c	-1.43	0.37	0.00	0.00	1.68	-0.22
11 top	2.19	-3.37	0.00	0.00	5.35	-3.38
11 a	2.11	-2.91	0.00	0.00	4.63	-3.04
11 b	1.81	-1.21	0.00	0.00	2.17	-1.77
11 c	1.50	0.28	0.00	0.00	0.50	0.12

VEH: R5 - MICHIGAN T BRUG(5.75.44) page 56
date 11/09/2009; time 13:25:23
Cline Avenue - Load Rating - Double Box - 4 Webs - 64.125' W

Summary of the results (Minimum)

Section	--- Deadload ----		----- P.T. ------		--- Live load ---	
	Moment	Ax.Frc	Moment	Ax.Frc	Moment	Ax.Frc
1 a	-3.62	0.38	0.00	0.00	-2.42	0.21
1 b	-7.10	0.87	0.00	0.00	-6.93	0.49
1 c	-11.87	1.64	0.00	0.00	-12.47	0.99
1 right	-13.22	1.88	0.00	0.00	-14.43	1.15
2 left	-6.17	2.62	0.00	0.00	-8.55	-0.40
2 a	-5.23	2.40	0.00	0.00	-7.61	-0.44
2 b	-0.39	1.21	0.00	0.00	-1.22	0.21
2 c	0.23	1.01	0.00	0.00	-1.13	0.96
2 right	-4.44	1.81	0.00	0.00	-7.78	-1.20
3 left	-4.19	2.08	0.00	0.00	-13.05	0.12
3 a	-3.38	1.87	0.00	0.00	-11.90	0.09
3 b	0.39	0.79	0.00	0.00	-3.61	-0.10
3 c	0.56	0.67	0.00	0.00	-1.13	0.08
3 right	-4.71	1.53	0.00	0.00	-12.62	0.17
4 left	-4.95	1.28	0.00	0.00	-7.89	-1.67
4 a	-4.08	1.08	0.00	0.00	-6.41	-1.68
4 b	0.29	0.02	0.00	0.00	-1.20	-0.16
4 c	0.72	-0.10	0.00	0.00	-0.98	0.53
4 right	-4.68	1.12	0.00	0.00	-8.44	-0.67
5 left	-6.87	1.02	0.00	0.00	-6.39	0.69
5 a	-5.84	0.83	0.00	0.00	-5.17	0.56
5 b	-2.43	0.26	0.00	0.00	-0.80	0.17
5 c	-0.33	0.03	0.00	0.00	-0.02	0.01
6 a	-0.73	-0.46	0.00	0.00	-0.87	0.53
6 b	-0.25	-0.06	0.00	0.00	-0.74	0.52
6 c	0.82	1.25	0.00	0.00	-0.12	2.07
7 a	-1.34	0.48	0.00	0.00	-1.34	2.41
7 b	-0.79	0.78	0.00	0.00	-1.15	2.42
7 c	0.79	1.51	0.00	0.00	-0.12	2.09
8 top	-7.05	-4.04	0.00	0.00	-12.95	-3.86
8 a	-6.42	-3.51	0.00	0.00	-11.32	-3.47
8 b	-4.22	-1.54	0.00	0.00	-5.92	-1.96
8 c	-2.02	0.16	0.00	0.00	-0.93	-0.58
9 top	-0.24	-2.88	0.00	0.00	-17.00	-1.56
9 a	-0.01	-2.46	0.00	0.00	-14.99	-1.37
9 b	0.81	-0.88	0.00	0.00	-8.10	-0.63
9 c	1.63	0.44	0.00	0.00	-1.65	-0.23
10 top	0.24	-3.08	0.00	0.00	-11.02	-2.15
10 a	0.04	-2.64	0.00	0.00	-9.72	-1.94
10 b	-0.70	-1.02	0.00	0.00	-5.27	-1.14
10 c	-1.43	0.37	0.00	0.00	-0.92	-0.35
11 top	2.19	-3.37	0.00	0.00	-7.86	-1.84
11 a	2.11	-2.91	0.00	0.00	-6.91	-1.64
11 b	1.81	-1.21	0.00	0.00	-3.86	-1.56
11 c	1.50	0.28	0.00	0.00	-1.27	-0.55

VEH: S1 - SPECIAL TR BRUG(5.75.44) page 55
date 11/09/2009; time 13:25:23
Cline Avenue - Load Rating - Double Box - 4 Webs - 64.125' W

Summary of the results (Maximum)

Section	--- Deadload ----		----- P.T. ------		--- Live load ---	
	Moment	Ax.Frc	Moment	Ax.Frc	Moment	Ax.Frc
1 a	-3.62	0.38	0.00	0.00	0.91	0.05
1 b	-7.10	0.87	0.00	0.00	0.61	0.19
1 c	-11.87	1.64	0.00	0.00	0.00	0.15
1 right	-13.22	1.88	0.00	0.00	0.01	0.17
2 left	-6.17	2.62	0.00	0.00	-0.26	0.08
2 a	-5.23	2.40	0.00	0.00	1.02	1.65
2 b	-0.39	1.21	0.00	0.00	4.70	-0.49
2 c	0.23	1.01	0.00	0.00	5.54	-1.25
2 right	-4.44	1.81	0.00	0.00	1.59	0.87
3 left	-4.19	2.08	0.00	0.00	12.82	1.12
3 a	-3.38	1.87	0.00	0.00	12.46	0.94
3 b	0.39	0.79	0.00	0.00	6.21	0.16
3 c	0.56	0.67	0.00	0.00	5.17	-0.07
3 right	-4.71	1.53	0.00	0.00	13.37	0.94
4 left	-4.95	1.28	0.00	0.00	1.60	0.76
4 a	-4.08	1.08	0.00	0.00	2.46	0.31
4 b	0.29	0.02	0.00	0.00	5.26	-1.49
4 c	0.72	-0.10	0.00	0.00	5.59	-1.52
4 right	-4.68	1.12	0.00	0.00	-0.18	0.03
5 left	-6.87	1.02	0.00	0.00	0.01	0.09
5 a	-5.84	0.83	0.00	0.00	0.01	0.08
5 b	-2.43	0.26	0.00	0.00	0.50	0.09
5 c	-0.33	0.03	0.00	0.00	0.15	0.01
6 a	-0.73	-0.46	0.00	0.00	1.93	-1.05
6 b	-0.25	-0.06	0.00	0.00	1.65	-0.58
6 c	0.82	1.25	0.00	0.00	0.08	-0.58
7 a	-1.34	0.48	0.00	0.00	0.98	-1.58
7 b	-0.79	0.78	0.00	0.00	0.84	-1.44
7 c	0.79	1.51	0.00	0.00	0.07	-0.56
8 top	-7.05	-4.04	0.00	0.00	7.73	-2.37
8 a	-6.42	-3.51	0.00	0.00	6.72	-2.09
8 b	-4.22	-1.54	0.00	0.00	3.63	-2.12
8 c	-2.02	0.16	0.00	0.00	1.29	-0.73
9 top	-0.24	-2.88	0.00	0.00	13.86	-2.14
9 a	-0.01	-2.46	0.00	0.00	12.29	-1.92
9 b	0.81	-0.88	0.00	0.00	6.77	-1.14
9 c	1.63	0.44	0.00	0.00	1.26	-0.40
10 top	0.24	-3.08	0.00	0.00	20.93	-2.25
10 a	0.04	-2.64	0.00	0.00	18.31	-1.92
10 b	-0.70	-1.02	0.00	0.00	9.75	-0.86
10 c	-1.43	0.37	0.00	0.00	1.89	-0.30
11 top	2.19	-3.37	0.00	0.00	5.45	-5.71
11 a	2.11	-2.91	0.00	0.00	4.65	-5.02
11 b	1.81	-1.21	0.00	0.00	2.10	-2.64
11 c	1.50	0.28	0.00	0.00	0.62	0.15

VEH: S1 - SPECIAL TR BRUG(5.75.44) page 56
date 11/09/2009; time 13:25:23
Cline Avenue - Load Rating - Double Box - 4 Webs - 64.125' W

Summary of the results (Minimum)

Section	--- Deadload ----		----- P.T. ------		--- Live load ---	
	Moment	Ax.Frc	Moment	Ax.Frc	Moment	Ax.Frc
1 a	-3.62	0.38	0.00	0.00	-1.79	0.11
1 b	-7.10	0.87	0.00	0.00	-7.16	0.33
1 c	-11.87	1.64	0.00	0.00	-12.99	0.92
1 right	-13.22	1.88	0.00	0.00	-15.72	1.17
2 left	-6.17	2.62	0.00	0.00	-9.22	-0.07
2 a	-5.23	2.40	0.00	0.00	-8.02	-0.50
2 b	-0.39	1.21	0.00	0.00	-1.21	-0.02
2 c	0.23	1.01	0.00	0.00	-1.32	0.91
2 right	-4.44	1.81	0.00	0.00	-8.16	-1.73
3 left	-4.19	2.08	0.00	0.00	-15.93	0.25
3 a	-3.38	1.87	0.00	0.00	-14.77	0.22
3 b	0.39	0.79	0.00	0.00	-4.61	0.08
3 c	0.56	0.67	0.00	0.00	-1.29	0.19
3 right	-4.71	1.53	0.00	0.00	-15.39	0.26
4 left	-4.95	1.28	0.00	0.00	-8.21	-2.05
4 a	-4.08	1.08	0.00	0.00	-6.35	-2.07
4 b	0.29	0.02	0.00	0.00	-1.49	1.10
4 c	0.72	-0.10	0.00	0.00	-1.27	0.80
4 right	-4.68	1.12	0.00	0.00	-9.10	-0.29
5 left	-6.87	1.02	0.00	0.00	-8.44	0.92
5 a	-5.84	0.83	0.00	0.00	-6.54	0.68
5 b	-2.43	0.26	0.00	0.00	-0.60	0.16
5 c	-0.33	0.03	0.00	0.00	-0.03	0.01
6 a	-0.73	-0.46	0.00	0.00	-0.86	0.40
6 b	-0.25	-0.06	0.00	0.00	-0.74	0.37
6 c	0.82	1.25	0.00	0.00	-0.13	2.10
7 a	-1.34	0.48	0.00	0.00	-1.57	2.82
7 b	-0.79	0.78	0.00	0.00	-1.35	2.77
7 c	0.79	1.51	0.00	0.00	-0.13	2.13
8 top	-7.05	-4.04	0.00	0.00	-12.87	-5.88
8 a	-6.42	-3.51	0.00	0.00	-11.05	-5.19
8 b	-4.22	-1.54	0.00	0.00	-5.56	-2.70
8 c	-2.02	0.16	0.00	0.00	-0.78	-0.74
9 top	-0.24	-2.88	0.00	0.00	-20.34	-2.54
9 a	-0.01	-2.46	0.00	0.00	-17.78	-2.18
9 b	0.81	-0.88	0.00	0.00	-9.48	-0.90
9 c	1.63	0.44	0.00	0.00	-1.84	-0.31
10 top	0.24	-3.08	0.00	0.00	-13.28	-2.16
10 a	0.04	-2.64	0.00	0.00	-11.78	-1.86
10 b	-0.70	-1.02	0.00	0.00	-6.49	-1.10
10 c	-1.43	0.37	0.00	0.00	-1.23	-0.38
11 top	2.19	-3.37	0.00	0.00	-7.66	-2.36
11 a	2.11	-2.91	0.00	0.00	-6.66	-2.08
11 b	1.81	-1.21	0.00	0.00	-3.61	-2.13
11 c	1.50	0.28	0.00	0.00	-1.32	-0.74

VEH: S2 - SPECIAL TR BRUG(5.75.44) page 55
date 11/09/2009; time 13:25:24
Cline Avenue - Load Rating - Double Box - 4 Webs - 64.125' W

Summary of the results (Maximum)

Section	--- Deadload ---		----- P.T. ------		--- Live load ---	
	Moment	Ax.Frc	Moment	Ax.Frc	Moment	Ax.Frc
1 a	-3.62	0.38	0.00	0.00	0.74	0.07
1 b	-7.10	0.87	0.00	0.00	0.48	0.28
1 c	-11.87	1.64	0.00	0.00	0.02	0.14
1 right	-13.22	1.88	0.00	0.00	0.03	0.16
2 left	-6.17	2.62	0.00	0.00	-0.15	1.96
2 a	-5.23	2.40	0.00	0.00	1.09	1.59
2 b	-0.39	1.21	0.00	0.00	4.53	-0.48
2 c	0.23	1.01	0.00	0.00	5.32	-1.25
2 right	-4.44	1.81	0.00	0.00	1.76	0.76
3 left	-4.19	2.08	0.00	0.00	12.98	1.04
3 a	-3.38	1.87	0.00	0.00	12.46	0.87
3 b	0.39	0.79	0.00	0.00	5.93	0.16
3 c	0.56	0.67	0.00	0.00	4.97	-0.08
3 right	-4.71	1.53	0.00	0.00	13.52	0.87
4 left	-4.95	1.28	0.00	0.00	1.76	0.66
4 a	-4.08	1.08	0.00	0.00	2.50	0.25
4 b	0.29	0.02	0.00	0.00	5.08	-1.47
4 c	0.72	-0.10	0.00	0.00	5.37	-1.51
4 right	-4.68	1.12	0.00	0.00	-0.18	0.03
5 left	-6.87	1.02	0.00	0.00	0.03	0.09
5 a	-5.84	0.83	0.00	0.00	0.02	0.07
5 b	-2.43	0.26	0.00	0.00	0.40	0.12
5 c	-0.33	0.03	0.00	0.00	0.11	0.01
6 a	-0.73	-0.46	0.00	0.00	1.90	-1.04
6 b	-0.25	-0.06	0.00	0.00	1.62	-0.59
6 c	0.82	1.25	0.00	0.00	0.08	-0.58
7 a	-1.34	0.48	0.00	0.00	0.97	-1.57
7 b	-0.79	0.78	0.00	0.00	0.83	-1.42
7 c	0.79	1.51	0.00	0.00	0.07	-0.56
8 top	-7.05	-4.04	0.00	0.00	7.54	-2.10
8 a	-6.42	-3.51	0.00	0.00	6.59	-1.85
8 b	-4.22	-1.54	0.00	0.00	3.61	-1.86
8 c	-2.02	0.16	0.00	0.00	1.29	-0.65
9 top	-0.24	-2.88	0.00	0.00	13.76	-2.10
9 a	-0.01	-2.46	0.00	0.00	12.20	-1.89
9 b	0.81	-0.88	0.00	0.00	6.72	-1.12
9 c	1.63	0.44	0.00	0.00	1.26	-0.39
10 top	0.24	-3.08	0.00	0.00	20.64	-1.75
10 a	0.04	-2.64	0.00	0.00	18.11	-1.47
10 b	-0.70	-1.02	0.00	0.00	9.70	-0.61
10 c	-1.43	0.37	0.00	0.00	1.88	-0.21
11 top	2.19	-3.37	0.00	0.00	5.28	-4.89
11 a	2.11	-2.91	0.00	0.00	4.53	-4.27
11 b	1.81	-1.21	0.00	0.00	2.07	-2.23
11 c	1.50	0.28	0.00	0.00	0.62	0.15

VEH: S2 - SPECIAL TR BRUG(5.75.44) page 56
date 11/09/2009; time 13:25:24
Cline Avenue - Load Rating - Double Box - 4 Webs - 64.125' W

Summary of the results (Minimum)

Section	--- Deadload ---		----- P.T. ------		--- Live load ---	
	Moment	Ax.Frc	Moment	Ax.Frc	Moment	Ax.Frc
1 a	-3.62	0.38	0.00	0.00	-1.90	0.13
1 b	-7.10	0.87	0.00	0.00	-6.97	0.35
1 c	-11.87	1.64	0.00	0.00	-12.48	0.87
1 right	-13.22	1.88	0.00	0.00	-14.91	1.09
2 left	-6.17	2.62	0.00	0.00	-8.71	-0.10
2 a	-5.23	2.40	0.00	0.00	-7.63	-0.51
2 b	-0.39	1.21	0.00	0.00	-1.16	0.11
2 c	0.23	1.01	0.00	0.00	-1.31	0.91
2 right	-4.44	1.81	0.00	0.00	-7.70	-1.77
3 left	-4.19	2.08	0.00	0.00	-15.79	0.26
3 a	-3.38	1.87	0.00	0.00	-14.64	0.23
3 b	0.39	0.79	0.00	0.00	-4.58	0.10
3 c	0.56	0.67	0.00	0.00	-1.29	0.19
3 right	-4.71	1.53	0.00	0.00	-15.28	0.26
4 left	-4.95	1.28	0.00	0.00	-7.75	-2.06
4 a	-4.08	1.08	0.00	0.00	-6.01	-2.07
4 b	0.29	0.02	0.00	0.00	-1.48	1.10
4 c	0.72	-0.10	0.00	0.00	-1.26	0.80
4 right	-4.68	1.12	0.00	0.00	-8.60	-0.33
5 left	-6.87	1.02	0.00	0.00	-7.56	0.82
5 a	-5.84	0.83	0.00	0.00	-5.95	0.62
5 b	-2.43	0.26	0.00	0.00	-0.63	0.16
5 c	-0.33	0.03	0.00	0.00	-0.03	0.01
6 a	-0.73	-0.46	0.00	0.00	-0.85	0.23
6 b	-0.25	-0.06	0.00	0.00	-0.73	0.36
6 c	0.82	1.25	0.00	0.00	-0.13	2.13
7 a	-1.34	0.48	0.00	0.00	-1.55	2.79
7 b	-0.79	0.78	0.00	0.00	-1.33	2.74
7 c	0.79	1.51	0.00	0.00	-0.13	2.15
8 top	-7.05	-4.04	0.00	0.00	-12.60	-5.18
8 a	-6.42	-3.51	0.00	0.00	-10.86	-4.54
8 b	-4.22	-1.54	0.00	0.00	-5.53	-2.35
8 c	-2.02	0.16	0.00	0.00	-0.80	-0.66
9 top	-0.24	-2.88	0.00	0.00	-20.05	-2.02
9 a	-0.01	-2.46	0.00	0.00	-17.59	-1.70
9 b	0.81	-0.88	0.00	0.00	-9.43	-0.66
9 c	1.63	0.44	0.00	0.00	-1.84	-0.23
10 top	0.24	-3.08	0.00	0.00	-13.17	-2.02
10 a	0.04	-2.64	0.00	0.00	-11.68	-1.82
10 b	-0.70	-1.02	0.00	0.00	-6.44	-1.08
10 c	-1.43	0.37	0.00	0.00	-1.22	-0.37
11 top	2.19	-3.37	0.00	0.00	-7.47	-2.09
11 a	2.11	-2.91	0.00	0.00	-6.54	-1.85
11 b	1.81	-1.21	0.00	0.00	-3.60	-1.87
11 c	1.50	0.28	0.00	0.00	-1.32	-0.66

VEH: S3 - SPECIAL TR BRUG(5.75.44) page 55
date 11/09/2009; time 13:25:25
Cline Avenue - Load Rating - Double Box - 4 Webs - 64.125' W

Summary of the results (Maximum)

Section	--- Deadload ----		----- P.T. ------		--- Live load ---	
	Moment	Ax.Frc	Moment	Ax.Frc	Moment	Ax.Frc
1 a	-3.62	0.38	0.00	0.00	0.65	0.11
1 b	-7.10	0.87	0.00	0.00	0.42	0.40
1 c	-11.87	1.64	0.00	0.00	0.02	0.20
1 right	-13.22	1.88	0.00	0.00	0.03	0.23
2 left	-6.17	2.62	0.00	0.00	0.43	2.59
2 a	-5.23	2.40	0.00	0.00	1.74	2.12
2 b	-0.39	1.21	0.00	0.00	5.81	-0.55
2 c	0.23	1.01	0.00	0.00	6.75	-1.57
2 right	-4.44	1.81	0.00	0.00	2.80	1.04
3 left	-4.19	2.08	0.00	0.00	17.17	1.37
3 a	-3.38	1.87	0.00	0.00	16.33	1.19
3 b	0.39	0.79	0.00	0.00	7.45	0.29
3 c	0.56	0.67	0.00	0.00	6.29	-0.02
3 right	-4.71	1.53	0.00	0.00	17.88	1.08
4 left	-4.95	1.28	0.00	0.00	2.80	0.88
4 a	-4.08	1.08	0.00	0.00	3.58	0.36
4 b	0.29	0.02	0.00	0.00	6.55	-1.89
4 c	0.72	-0.10	0.00	0.00	6.81	-1.98
4 right	-4.68	1.12	0.00	0.00	-0.24	0.03
5 left	-6.87	1.02	0.00	0.00	0.03	0.13
5 a	-5.84	0.83	0.00	0.00	0.02	0.10
5 b	-2.43	0.26	0.00	0.00	0.34	0.15
5 c	-0.33	0.03	0.00	0.00	0.09	0.01
6 a	-0.73	-0.46	0.00	0.00	2.57	-1.47
6 b	-0.25	-0.06	0.00	0.00	2.20	-0.89
6 c	0.82	1.25	0.00	0.00	0.10	-0.74
7 a	-1.34	0.48	0.00	0.00	1.29	-2.08
7 b	-0.79	0.78	0.00	0.00	1.11	-1.81
7 c	0.79	1.51	0.00	0.00	0.10	-0.71
8 top	-7.05	-4.04	0.00	0.00	10.33	-2.56
8 a	-6.42	-3.51	0.00	0.00	9.08	-2.26
8 b	-4.22	-1.54	0.00	0.00	5.01	-2.20
8 c	-2.02	0.16	0.00	0.00	1.77	-0.79
9 top	-0.24	-2.88	0.00	0.00	17.97	-3.16
9 a	-0.01	-2.46	0.00	0.00	15.85	-2.57
9 b	0.81	-0.88	0.00	0.00	8.70	-1.48
9 c	1.63	0.44	0.00	0.00	1.62	-0.51
10 top	0.24	-3.08	0.00	0.00	27.07	-1.74
10 a	0.04	-2.64	0.00	0.00	23.82	-1.45
10 b	-0.70	-1.02	0.00	0.00	12.84	-0.58
10 c	-1.43	0.37	0.00	0.00	2.53	-0.21
11 top	2.19	-3.37	0.00	0.00	7.21	-5.43
11 a	2.11	-2.91	0.00	0.00	6.21	-4.77
11 b	1.81	-1.21	0.00	0.00	2.87	-2.56
11 c	1.50	0.28	0.00	0.00	0.80	0.19

VEH: S3 - SPECIAL TR BRUG(5.75.44) page 56
date 11/09/2009; time 13:25:25
Cline Avenue - Load Rating - Double Box - 4 Webs - 64.125' W

Summary of the results (Minimum)

Section	--- Deadload ----		----- P.T. ------		--- Live load ---	
	Moment	Ax.Frc	Moment	Ax.Frc	Moment	Ax.Frc
1 a	-3.62	0.38	0.00	0.00	-2.81	0.21
1 b	-7.10	0.87	0.00	0.00	-9.10	0.52
1 c	-11.87	1.64	0.00	0.00	-16.20	1.15
1 right	-13.22	1.88	0.00	0.00	-19.07	1.39
2 left	-6.17	2.62	0.00	0.00	-11.29	-0.61
2 a	-5.23	2.40	0.00	0.00	-10.06	-0.69
2 b	-0.39	1.21	0.00	0.00	-1.63	0.18
2 c	0.23	1.01	0.00	0.00	-1.69	1.12
2 right	-4.44	1.81	0.00	0.00	-9.93	-2.27
3 left	-4.19	2.08	0.00	0.00	-20.45	0.26
3 a	-3.38	1.87	0.00	0.00	-18.97	0.22
3 b	0.39	0.79	0.00	0.00	-5.99	0.08
3 c	0.56	0.67	0.00	0.00	-1.65	0.24
3 right	-4.71	1.53	0.00	0.00	-19.70	0.31
4 left	-4.95	1.28	0.00	0.00	-10.03	-2.72
4 a	-4.08	1.08	0.00	0.00	-7.90	-2.72
4 b	0.29	0.02	0.00	0.00	-1.91	1.39
4 c	0.72	-0.10	0.00	0.00	-1.62	0.97
4 right	-4.68	1.12	0.00	0.00	-11.14	-0.90
5 left	-6.87	1.02	0.00	0.00	-8.95	0.95
5 a	-5.84	0.83	0.00	0.00	-7.13	0.73
5 b	-2.43	0.26	0.00	0.00	-0.90	0.20
5 c	-0.33	0.03	0.00	0.00	-0.04	0.02
6 a	-0.73	-0.46	0.00	0.00	-1.17	0.67
6 b	-0.25	-0.06	0.00	0.00	-1.01	0.65
6 c	0.82	1.25	0.00	0.00	-0.17	2.86
7 a	-1.34	0.48	0.00	0.00	-2.06	3.67
7 b	-0.79	0.78	0.00	0.00	-1.78	3.62
7 c	0.79	1.51	0.00	0.00	-0.17	2.89
8 top	-7.05	-4.04	0.00	0.00	-17.07	-5.90
8 a	-6.42	-3.51	0.00	0.00	-14.83	-5.20
8 b	-4.22	-1.54	0.00	0.00	-7.68	-2.75
8 c	-2.02	0.16	0.00	0.00	-1.14	-0.80
9 top	-0.24	-2.88	0.00	0.00	-26.29	-2.04
9 a	-0.01	-2.46	0.00	0.00	-23.13	-1.72
9 b	0.81	-0.88	0.00	0.00	-12.49	-0.63
9 c	1.63	0.44	0.00	0.00	-2.47	-0.23
10 top	0.24	-3.08	0.00	0.00	-17.24	-3.07
10 a	0.04	-2.64	0.00	0.00	-15.19	-2.48
10 b	-0.70	-1.02	0.00	0.00	-8.35	-1.46
10 c	-1.43	0.37	0.00	0.00	-1.57	-0.48
11 top	2.19	-3.37	0.00	0.00	-10.24	-2.54
11 a	2.11	-2.91	0.00	0.00	-9.00	-2.25
11 b	1.81	-1.21	0.00	0.00	-4.98	-2.21
11 c	1.50	0.28	0.00	0.00	-1.80	-0.80

VEH: S4 - SUPER LOAD BRUG(5.75.44) page 55
date 11/09/2009; time 13:25:25
Cline Avenue - Load Rating - Double Box - 4 Webs - 64.125' W

Summary of the results (Maximum)

Section	--- Deadload ---- Moment	Ax.Frc	----- P.T. ------ Moment	Ax.Frc	--- Live load --- Moment	Ax.Frc
1 a	-3.62	0.38	0.00	0.00	0.52	0.05
1 b	-7.10	0.87	0.00	0.00	0.38	0.14
1 c	-11.87	1.64	0.00	0.00	-0.04	0.15
1 right	-13.22	1.88	0.00	0.00	-0.05	0.17
2 left	-6.17	2.62	0.00	0.00	0.76	1.71
2 a	-5.23	2.40	0.00	0.00	1.67	1.39
2 b	-0.39	1.21	0.00	0.00	4.14	-0.50
2 c	0.23	1.01	0.00	0.00	4.72	-1.25
2 right	-4.44	1.81	0.00	0.00	2.25	0.57
3 left	-4.19	2.08	0.00	0.00	14.31	0.82
3 a	-3.38	1.87	0.00	0.00	13.60	0.69
3 b	0.39	0.79	0.00	0.00	5.77	0.12
3 c	0.56	0.67	0.00	0.00	4.41	-0.05
3 right	-4.71	1.53	0.00	0.00	14.92	0.66
4 left	-4.95	1.28	0.00	0.00	2.26	0.47
4 a	-4.08	1.08	0.00	0.00	2.86	0.06
4 b	0.29	0.02	0.00	0.00	4.67	-1.51
4 c	0.72	-0.10	0.00	0.00	4.77	-1.49
4 right	-4.68	1.12	0.00	0.00	-0.18	1.17
5 left	-6.87	1.02	0.00	0.00	-0.01	0.10
5 a	-5.84	0.83	0.00	0.00	-0.03	0.08
5 b	-2.43	0.26	0.00	0.00	0.32	0.05
5 c	-0.33	0.03	0.00	0.00	0.08	0.00
6 a	-0.73	-0.46	0.00	0.00	1.94	-1.07
6 b	-0.25	-0.06	0.00	0.00	1.67	-0.68
6 c	0.82	1.25	0.00	0.00	0.08	-0.61
7 a	-1.34	0.48	0.00	0.00	0.99	-1.68
7 b	-0.79	0.78	0.00	0.00	0.86	-1.48
7 c	0.79	1.51	0.00	0.00	0.08	-0.59
8 top	-7.05	-4.04	0.00	0.00	7.12	-1.80
8 a	-6.42	-3.51	0.00	0.00	6.26	-1.59
8 b	-4.22	-1.54	0.00	0.00	3.45	-0.82
8 c	-2.02	0.16	0.00	0.00	1.30	-0.56
9 top	-0.24	-2.88	0.00	0.00	14.59	-2.26
9 a	-0.01	-2.46	0.00	0.00	12.93	-2.03
9 b	0.81	-0.88	0.00	0.00	7.12	-1.20
9 c	1.63	0.44	0.00	0.00	1.33	-0.42
10 top	0.24	-3.08	0.00	0.00	20.75	-0.91
10 a	0.04	-2.64	0.00	0.00	18.26	-0.74
10 b	-0.70	-1.02	0.00	0.00	9.86	-0.15
10 c	-1.43	0.37	0.00	0.00	1.93	-0.08
11 top	2.19	-3.37	0.00	0.00	5.16	-3.94
11 a	2.11	-2.91	0.00	0.00	4.43	-3.46
11 b	1.81	-1.21	0.00	0.00	2.03	-1.83
11 c	1.50	0.28	0.00	0.00	0.66	0.16

VEH: S4 - SUPER LOAD BRUG(5.75.44) page 56
date 11/09/2009; time 13:25:25
Cline Avenue - Load Rating - Double Box - 4 Webs - 64.125' W

Summary of the results (Minimum)

Section	--- Deadload ---- Moment	Ax.Frc	----- P.T. ------ Moment	Ax.Frc	--- Live load --- Moment	Ax.Frc
1 a	-3.62	0.38	0.00	0.00	-1.70	0.10
1 b	-7.10	0.87	0.00	0.00	-5.83	0.25
1 c	-11.87	1.64	0.00	0.00	-10.37	0.63
1 right	-13.22	1.88	0.00	0.00	-12.36	0.80
2 left	-6.17	2.62	0.00	0.00	-7.67	-0.46
2 a	-5.23	2.40	0.00	0.00	-6.83	-0.52
2 b	-0.39	1.21	0.00	0.00	-1.23	0.56
2 c	0.23	1.01	0.00	0.00	-1.38	0.99
2 right	-4.44	1.81	0.00	0.00	-6.48	-2.01
3 left	-4.19	2.08	0.00	0.00	-16.80	0.32
3 a	-3.38	1.87	0.00	0.00	-15.57	0.29
3 b	0.39	0.79	0.00	0.00	-4.84	0.13
3 c	0.56	0.67	0.00	0.00	-1.36	0.24
3 right	-4.71	1.53	0.00	0.00	-16.24	0.30
4 left	-4.95	1.28	0.00	0.00	-6.36	-2.21
4 a	-4.08	1.08	0.00	0.00	-4.91	-2.20
4 b	0.29	0.02	0.00	0.00	-1.57	1.19
4 c	0.72	-0.10	0.00	0.00	-1.33	0.86
4 right	-4.68	1.12	0.00	0.00	-7.58	-0.64
5 left	-6.87	1.02	0.00	0.00	-5.90	0.57
5 a	-5.84	0.83	0.00	0.00	-4.62	0.42
5 b	-2.43	0.26	0.00	0.00	-0.47	0.10
5 c	-0.33	0.03	0.00	0.00	-0.01	0.01
6 a	-0.73	-0.46	0.00	0.00	-0.88	0.21
6 b	-0.25	-0.06	0.00	0.00	-0.75	0.15
6 c	0.82	1.25	0.00	0.00	-0.13	1.91
7 a	-1.34	0.48	0.00	0.00	-1.59	2.77
7 b	-0.79	0.78	0.00	0.00	-1.38	2.68
7 c	0.79	1.51	0.00	0.00	-0.13	1.93
8 top	-7.05	-4.04	0.00	0.00	-11.68	-4.12
8 a	-6.42	-3.51	0.00	0.00	-10.13	-3.63
8 b	-4.22	-1.54	0.00	0.00	-5.25	-1.88
8 c	-2.02	0.16	0.00	0.00	-0.79	-0.55
9 top	-0.24	-2.88	0.00	0.00	-20.11	-1.13
9 a	-0.01	-2.46	0.00	0.00	-17.70	-0.93
9 b	0.81	-0.88	0.00	0.00	-9.57	-0.26
9 c	1.63	0.44	0.00	0.00	-1.89	-0.10
10 top	0.24	-3.08	0.00	0.00	-13.98	-2.18
10 a	0.04	-2.64	0.00	0.00	-12.39	-1.96
10 b	-0.70	-1.02	0.00	0.00	-6.82	-1.16
10 c	-1.43	0.37	0.00	0.00	-1.29	-0.40
11 top	2.19	-3.37	0.00	0.00	-7.04	-1.79
11 a	2.11	-2.91	0.00	0.00	-6.19	-1.58
11 b	1.81	-1.21	0.00	0.00	-3.43	-0.82
11 c	1.50	0.28	0.00	0.00	-1.33	-0.57

VEH: S5 - SUPERLOAD BRUG(5.75.44) page 55
date 11/09/2009; time 13:25:26
Cline Avenue - Load Rating - Double Box - 4 Webs - 64.125' W

Summary of the results (Maximum)

Section	--- Deadload ----		----- P.T. ------		--- Live load ---	
	Moment	Ax.Frc	Moment	Ax.Frc	Moment	Ax.Frc
1 a	-3.62	0.38	0.00	0.00	0.82	0.07
1 b	-7.10	0.87	0.00	0.00	0.53	0.31
1 c	-11.87	1.64	0.00	0.00	0.02	0.18
1 right	-13.22	1.88	0.00	0.00	0.03	0.20
2 left	-6.17	2.62	0.00	0.00	0.21	2.31
2 a	-5.23	2.40	0.00	0.00	1.61	1.88
2 b	-0.39	1.21	0.00	0.00	5.58	-0.72
2 c	0.23	1.01	0.00	0.00	6.49	-1.71
2 right	-4.44	1.81	0.00	0.00	2.40	0.75
3 left	-4.19	2.08	0.00	0.00	18.14	1.11
3 a	-3.38	1.87	0.00	0.00	17.27	0.93
3 b	0.39	0.79	0.00	0.00	7.67	0.10
3 c	0.56	0.67	0.00	0.00	6.10	-0.18
3 right	-4.71	1.53	0.00	0.00	18.92	0.96
4 left	-4.95	1.28	0.00	0.00	2.42	0.64
4 a	-4.08	1.08	0.00	0.00	3.28	0.11
4 b	0.29	0.02	0.00	0.00	6.28	-2.00
4 c	0.72	-0.10	0.00	0.00	6.55	-1.97
4 right	-4.68	1.12	0.00	0.00	-0.25	0.04
5 left	-6.87	1.02	0.00	0.00	0.03	0.11
5 a	-5.84	0.83	0.00	0.00	0.02	0.09
5 b	-2.43	0.26	0.00	0.00	0.44	0.13
5 c	-0.33	0.03	0.00	0.00	0.12	0.01
6 a	-0.73	-0.46	0.00	0.00	2.47	-1.31
6 b	-0.25	-0.06	0.00	0.00	2.11	-0.77
6 c	0.82	1.25	0.00	0.00	0.11	-0.79
7 a	-1.34	0.48	0.00	0.00	1.28	-2.16
7 b	-0.79	0.78	0.00	0.00	1.11	-2.01
7 c	0.79	1.51	0.00	0.00	0.10	-0.77
8 top	-7.05	-4.04	0.00	0.00	9.16	-2.49
8 a	-6.42	-3.51	0.00	0.00	8.03	-2.20
8 b	-4.22	-1.54	0.00	0.00	4.40	-2.19
8 c	-2.02	0.16	0.00	0.00	1.66	-0.79
9 top	-0.24	-2.88	0.00	0.00	18.95	-2.90
9 a	-0.01	-2.46	0.00	0.00	16.81	-2.61
9 b	0.81	-0.88	0.00	0.00	9.27	-1.55
9 c	1.63	0.44	0.00	0.00	1.74	-0.54
10 top	0.24	-3.08	0.00	0.00	27.15	-1.58
10 a	0.04	-2.64	0.00	0.00	23.87	-1.30
10 b	-0.70	-1.02	0.00	0.00	12.83	-0.38
10 c	-1.43	0.37	0.00	0.00	2.48	-0.17
11 top	2.19	-3.37	0.00	0.00	6.55	-5.63
11 a	2.11	-2.91	0.00	0.00	5.62	-4.94
11 b	1.81	-1.21	0.00	0.00	2.55	-2.60
11 c	1.50	0.28	0.00	0.00	0.86	0.20

VEH: S5 - SUPERLOAD BRUG(5.75.44) page 56
date 11/09/2009; time 13:25:26
Cline Avenue - Load Rating - Double Box - 4 Webs - 64.125' W

Summary of the results (Minimum)

Section	--- Deadload ----		----- P.T. ------		--- Live load ---	
	Moment	Ax.Frc	Moment	Ax.Frc	Moment	Ax.Frc
1 a	-3.62	0.38	0.00	0.00	-2.30	0.14
1 b	-7.10	0.87	0.00	0.00	-8.23	0.37
1 c	-11.87	1.64	0.00	0.00	-14.72	0.94
1 right	-13.22	1.88	0.00	0.00	-17.55	1.18
2 left	-6.17	2.62	0.00	0.00	-10.27	-0.60
2 a	-5.23	2.40	0.00	0.00	-9.15	-0.68
2 b	-0.39	1.21	0.00	0.00	-1.58	0.90
2 c	0.23	1.01	0.00	0.00	-1.80	1.34
2 right	-4.44	1.81	0.00	0.00	-8.86	-2.54
3 left	-4.19	2.08	0.00	0.00	-21.76	0.48
3 a	-3.38	1.87	0.00	0.00	-20.16	0.43
3 b	0.39	0.79	0.00	0.00	-6.24	0.21
3 c	0.56	0.67	0.00	0.00	-1.79	0.33
3 right	-4.71	1.53	0.00	0.00	-21.13	0.42
4 left	-4.95	1.28	0.00	0.00	-8.92	-2.82
4 a	-4.08	1.08	0.00	0.00	-6.89	-2.81
4 b	0.29	0.02	0.00	0.00	-2.05	1.57
4 c	0.72	-0.10	0.00	0.00	-1.75	1.14
4 right	-4.68	1.12	0.00	0.00	-10.14	-0.80
5 left	-6.87	1.02	0.00	0.00	-8.77	0.90
5 a	-5.84	0.83	0.00	0.00	-6.90	0.68
5 b	-2.43	0.26	0.00	0.00	-0.76	0.17
5 c	-0.33	0.03	0.00	0.00	-0.04	0.01
6 a	-0.73	-0.46	0.00	0.00	-1.13	0.24
6 b	-0.25	-0.06	0.00	0.00	-0.97	0.17
6 c	0.82	1.25	0.00	0.00	-0.16	2.63
7 a	-1.34	0.48	0.00	0.00	-2.05	3.64
7 b	-0.79	0.78	0.00	0.00	-1.77	3.55
7 c	0.79	1.51	0.00	0.00	-0.17	2.66
8 top	-7.05	-4.04	0.00	0.00	-15.30	-5.97
8 a	-6.42	-3.51	0.00	0.00	-13.22	-5.25
8 b	-4.22	-1.54	0.00	0.00	-6.75	-2.72
8 c	-2.02	0.16	0.00	0.00	-0.98	-0.77
9 top	-0.24	-2.88	0.00	0.00	-26.35	-1.90
9 a	-0.01	-2.46	0.00	0.00	-23.16	-1.59
9 b	0.81	-0.88	0.00	0.00	-12.47	-0.54
9 c	1.63	0.44	0.00	0.00	-2.42	-0.19
10 top	0.24	-3.08	0.00	0.00	-18.17	-2.78
10 a	0.04	-2.64	0.00	0.00	-16.12	-2.50
10 b	-0.70	-1.02	0.00	0.00	-8.89	-1.48
10 c	-1.43	0.37	0.00	0.00	-1.69	-0.52
11 top	2.19	-3.37	0.00	0.00	-9.08	-2.48
11 a	2.11	-2.91	0.00	0.00	-7.96	-2.19
11 b	1.81	-1.21	0.00	0.00	-4.38	-2.20
11 c	1.50	0.28	0.00	0.00	-1.70	-0.80

4.6.4 Brug Input Striped Lanes

1_III_A_SL_HL93_truck_EL.txt 9/11/2009

```
* start ; column 11-30 can be used to have your own text on the top of each page
*   5   10   15   20   25   30   35   40   45   50   55   60   65   70   75   80
*   V    V    V    V    V    V    V    V    V    V    V    V    V    V    V    V
00001  1 1     VEH: HL93- TRUCK - SINGLE TRUCK
* code 1001
Cline Avenue - STRIPED LANES - Double Box - 4 Webs - 64.125' Wide - Single Vehicle
* code 1002
    2         1
* code 1003
*   5   10   15   20   25   30   35   40   45   50   55   60   65   70   75   80
*   V    V    V    V    V    V    V    V    V    V    V    V    V    V    V    V
250.0     182.0     64.1250   1.0       1.0       1.3
* code 1004
    1    0    2
* code 1005
   72    1
* code 1005a
* location traffic lanes
13.958
* maximum and minimum truck
11.708    52.208    10.000
* code 1007, linear loads
0.7350    0.441
63.39     0.441
* code 1201
   10    6    5    2    4
* code 1202 coordinates
0.0000    0.0
10.7917   0.0
10.7917   -7.9375
26.6250   0.0
26.6250   -7.9375
41.4383   0.0
41.4383   -7.9375
57.2717   0.0
57.2717   -7.9375
64.1250   0.0
* code 1203 - profile 1
    5    2    3    4
0.0000    0.750
5.2083    0.750
7.7083    1.208
10.2083   1.667
10.7917   1.667
* code 1203 - profile 2
    7    2    3    4
0.0000    1.667
0.5833    1.667
5.5833    0.750
7.9167    0.750
10.2500   0.750
15.2500   1.667
15.8333   1.667
* code 1203 - profile 3
    7    2    3    4
0.0000    1.667
0.5833    1.667
5.5833    0.750
7.4067    0.750
9.2300    0.750
14.2300   1.667
14.8133   1.667
* code 1203 - profile 4
    5    2    3    4
0.0000    1.667
0.5833    1.667
3.0833    1.208
5.5833    0.750
6.8533    0.750
* code 1203 - profile 5
    7    2    3    4
0.0000    1.458
0.5833    1.458
1.5833    0.458
7.9167    0.458
14.2500   0.458
15.2500   1.458
15.8333   1.458
* code 1203 - profile 6
    5    2    3    4
0.0000    1.167
```

```
0.8334    1.167
3.7709    1.167
6.7084    1.167
7.9375    1.167
* code 1204 - assembling boxgirder
    1    2    1
    2    4    2
    4    6    3
    6    8    2
    8   10    4
    3    5    5
    7    9    5
    2    3    6
    4    5    6
    6    7    6
    8    9    6
* code 1205 control code
    1    2   13    1    1    0    4    3     1.0       1.0
* code 1206 wheels/axle
       0.0
       1.5
       6.0
       7.5 0.833
* code 1207 definition axles
0.0       0.1
14.0      0.4
28.0      0.4
* code 1208 - accuracy
0.00001   0.00001   0.00001   .00001    .00001
* code 1209 number sections
   45
   1A   1B   1C   1R   2L   2A   2B   2C   2R   3L   3A   3B   3C   3R
   4L   4A   4B   4C   4R   5L   5A   5B   5C
   6A   6B   6C   7A   7B   7C   8L   8A   8B   8C   9L   9A   9B   9C
  10L  10A  10B  10C  11L  11A  11B  11C
* code 1210 - density conrete
0.156
* code 1211 - extra forces selfweight

* code 1212 - surcharge
1.603
* code 1213 - Prestressing Layout - NONE
•
```

```
* start ; column 11-30 can be used to have your own text on the top of each page
*   5   10   15   20   25   30   35   40   45   50   55   60   65   70   75   80
*   V    V    V    V    V    V    V    V    V    V    V    V    V    V    V    V
00001  1 1     VEH: HL93- TANDEM- SINGLE TRUCK
* code 1001
Cline Avenue - STRIPED LANES - Double Box - 4 Webs - 64.125' Wide - Single Vehicle
* code 1002
    2         1
* code 1003
*   5   10   15   20   25   30   35   40   45   50   55   60   65   70   75   80
*   V    V    V    V    V    V    V    V    V    V    V    V    V    V    V    V
250.0     182.0     64.1250   1.0       1.0       1.3
* code 1004
    1    0    2
* code 1005
   50    1
* code 1005a
* location traffic lanes
13.958
* maximum and minimum truck
11.708    52.208    10.000
* code 1007, linear loads
0.7350    0.441
63.39     0.441
* code 1201
   10    6    5    2    4
* code 1202 coordinates
0.0000    0.0
10.7917   0.0
10.7917   -7.9375
26.6250   0.0
26.6250   -7.9375
41.4383   0.0
41.4383   -7.9375
57.2717   0.0
57.2717   -7.9375
64.1250   0.0
* code 1203 - profile 1
    5    2    3    4
0.0000    0.750
5.2083    0.750
7.7083    1.208
10.2083   1.667
10.7917   1.667
* code 1203 - profile 2
    7    2    3    4
0.0000    1.667
0.5833    1.667
5.5833    0.750
7.9167    0.750
10.2500   0.750
15.2500   1.667
15.8333   1.667
* code 1203 - profile 3
    7    2    3    4
0.0000    1.667
0.5833    1.667
5.5833    0.750
7.4067    0.750
9.2300    0.750
14.2300   1.667
14.8133   1.667
* code 1203 - profile 4
    5    2    3    4
0.0000    1.667
0.5833    1.667
3.0833    1.208
5.5833    0.750
6.8533    0.750
* code 1203 - profile 5
    7    2    3    4
0.0000    1.458
0.5833    1.458
1.5833    0.458
7.9167    0.458
14.2500   0.458
15.2500   1.458
15.8333   1.458
* code 1203 - profile 6
    5    2    3    4
0.0000    1.167
```

1_III_A_SL_HL93_tandem_EL.txt 9/11/2009

```
0.8334    1.167
3.7709    1.167
6.7084    1.167
7.9375    1.167
* code 1204 - assembling boxgirder
    1    2    1
    2    4    2
    4    6    3
    6    8    2
    8   10    4
    3    5    5
    7    9    5
    2    3    6
    4    5    6
    6    7    6
    8    9    6
* code 1205 control code
    1    2   13    1    1    0    4    2     1.0       1.0
* code 1206 wheels/axle
       0.0
       1.5
       6.0
       7.5 0.833
* code 1207 definition axles
0.0       0.5
4.0       0.5
* code 1208 - accuracy
0.00001   0.00001   0.00001   .00001    .00001
* code 1209 number sections
   45
   1A   1B   1C   1R   2L   2A   2B   2C   2R   3L   3A   3B   3C   3R
   4L   4A   4B   4C   4R   5L   5A   5B   5C
   6A   6B   6C   7A   7B   7C   8L   8A   8B   8C   9L   9A   9B   9C
  10L  10A  10B  10C  11L  11A  11B  11C
* code 1210 - density conrete
0.156
* code 1211 - extra forces selfweight

* code 1212 - surcharge
1.603
* code 1213 - Prestressing Layout - NONE
```

```
* start ; column 11-30 can be used to have your own text on the top of each page
00001    0    0
* code 1001
Cline Avenue - STRIPED LANES - Double Box - 4 Webs - 64.125' Wide
* code 1002
    2         1
* code 1003
*   5   10   15   20   25   30   35   40   45   50   55   60   65   70   75   80
*   V    V    V    V    V    V    V    V    V    V    V    V    V    V    V    V
250.0     182.0     64.1250   1.0       1.0       1.3
* code 1004
    2    0    2
* code 1005
   72
* code 1005a
* location traffic lanes
13.958    25.958
* maximum and minimum truck
11.708    52.208    10.000
* code 1007, linear loads
0.7350    0.441
63.39     0.441
* code 1201
   10    6    5    2    4
* code 1202 coordinates
0.0000    0.0
10.7917   0.0
10.7917   -7.9375
26.6250   0.0
26.6250   -7.9375
41.4383   0.0
41.4383   -7.9375
57.2717   0.0
57.2717   -7.9375
64.1250   0.0
* code 1203 - profile 1
    5    2    3    4
0.0000    0.750
5.2083    0.750
7.7083    1.208
10.2083   1.667
10.7917   1.667
* code 1203 - profile 2
    7    2    3    4
0.0000    1.667
0.5833    1.667
5.5833    0.750
7.9167    0.750
10.2500   0.750
15.2500   1.667
15.8333   1.667
* code 1203 - profile 3
    7    2    3    4
0.0000    1.667
0.5833    1.667
5.5833    0.750
7.4067    0.750
9.2300    0.750
14.2300   1.667
14.8133   1.667
* code 1203 - profile 4
    5    2    3    4
0.0000    1.667
0.5833    1.667
3.0833    1.208
5.5833    0.750
6.8533    0.750
* code 1203 - profile 5
    7    2    3    4
0.0000    1.458
0.5833    1.458
1.5833    0.458
7.9167    0.458
14.2500   0.458
15.2500   1.458
15.8333   1.458
* code 1203 - profile 6
    5    2    3    4
0.0000    1.167
0.8334    1.167
3.7709    1.167
```

```
6.7084    1.167
7.9375    1.167
* code 1204 - assembling boxgirder
    1    2    1
    2    4    2
    4    6    3
    6    8    2
    8   10    4
    3    5    5
    7    9    5
    2    3    6
    4    5    6
    6    7    6
    8    9    6
* code 1205 control code
    1    2   13    1    1    0    4    3     1.0       1.0
* code 1206 wheels/axle
       0.0
       1.5
       6.0
       7.5 0.833
* code 1207 definition axles
0.0       0.1
14.0      0.4
28.0      0.4
* code 1208 - accuracy
0.00001   0.00001   0.00001   .00001    .00001
* code 1209 number sections
   45
   1A   1B   1C   1R   2L   2A   2B   2C   2R   3L   3A   3B   3C   3R
   4L   4A   4B   4C   4R   5L   5A   5B   5C
   6A   6B   6C   7A   7B   7C   8L   8A   8B   8C   9L   9A   9B   9C
  10L  10A  10B  10C  11L  11A  11B  11C
* code 1210 - density conrete
0.156
* code 1211 - extra forces selfweight

* code 1212 - surcharge
1.603
* code 1213 - Prestressing Layout - NONE
•
```

```
* start ; column 11-30 can be used to have your own text on the top of each page
*   5   10   15   20   25   30   35   40   45   50   55   60   65   70   75   80
*   V    V    V    V    V    V    V    V    V    V    V    V    V    V    V    V
00001  1 1     VEH: HL93- TANDEM
* code 1001
Cline Avenue - STRIPED LANES - Double Box - 4 Webs - 64.125' Wide
* code 1002
    2         1
* code 1003
*   5   10   15   20   25   30   35   40   45   50   55   60   65   70   75   80
*   V    V    V    V    V    V    V    V    V    V    V    V    V    V    V    V
250.0     182.0     64.1250   1.0       1.0       1.3
* code 1004
    2    0    2
* code 1005
   50
* code 1005a
* location traffic lanes
13.958    25.958
* maximum and minimum truck
11.708    52.208    10.000
* code 1007, linear loads
0.7350    0.441
63.39     0.441
* code 1201
   10    6    5    2    4
* code 1202 coordinates
0.0000    0.0
10.7917   0.0
10.7917   -7.9375
26.6250   0.0
26.6250   -7.9375
41.4383   0.0
41.4383   -7.9375
57.2717   0.0
57.2717   -7.9375
64.1250   0.0
* code 1203 - profile 1
    5    2    3    4
0.0000    0.750
5.2083    0.750
7.7083    1.208
10.2083   1.667
10.7917   1.667
* code 1203 - profile 2
    7    2    3    4
0.0000    1.667
0.5833    1.667
5.5833    0.750
7.9167    0.750
10.2500   0.750
15.2500   1.667
15.8333   1.667
* code 1203 - profile 3
    7    2    3    4
0.0000    1.667
0.5833    1.667
5.5833    0.750
7.4067    0.750
9.2300    0.750
14.2300   1.667
14.8133   1.667
* code 1203 - profile 4
    5    2    3    4
0.0000    1.667
0.5833    1.667
3.0833    1.208
5.5833    0.750
6.8533    0.750
* code 1203 - profile 5
    7    2    3    4
0.0000    1.458
0.5833    1.458
1.5833    0.458
7.9167    0.458
14.2500   0.458
15.2500   1.458
15.8333   1.458
* code 1203 - profile 6
    5    2    3    4
0.0000    1.167
```

```
0.8334    1.167
3.7709    1.167
6.7084    1.167
7.9375    1.167
* code 1204 - assembling boxgirder
    1    2    1
    2    4    2
    4    6    3
    6    8    2
    8   10    4
    3    5    5
    7    9    5
    2    3    6
    4    5    6
    6    7    6
    8    9    6
* code 1205 control code
    1    2   13    1    1    0    4    2     1.0       1.0
* code 1206 wheels/axle
       0.0
       1.5
       6.0
       7.5 0.833
* code 1207 definition axles
0.0       0.5
4.0       0.5
* code 1208 - accuracy
0.00001   0.00001   0.00001   .00001    .00001
* code 1209 number sections
   45
   1A   1B   1C   1R   2L   2A   2B   2C   2R   3L   3A   3B   3C   3R
   4L   4A   4B   4C   4R   5L   5A   5B   5C
   6A   6B   6C   7A   7B   7C   8L   8A   8B   8C   9L   9A   9B   9C
  10L  10A  10B  10C  11L  11A  11B  11C
* code 1210 - density conrete
0.156
* code 1211 - extra forces selfweight

* code 1212 - surcharge
1.603
* code 1213 - Prestressing Layout - NONE
```

4.6.5 Brug Output Striped Lanes (Summary)

1_III_A_SL_HL93_truck_EL.OUT 9/11/2009

VEH: HL93- TRUCK - S BRUG(5.75.44) page 55
date 11/09/2009; time 14:42:35
Cline Avenue - STRIPED LANES - Double Box - 4 Webs - 64.125'

Summary of the results (Maximum)

Section	--- Deadload ----		----- P.T. ------		--- Live load ---	
	Moment	Ax.Frc	Moment	Ax.Frc	Moment	Ax.Frc
1 a	-3.62	0.38	0.00	0.00	0.09	0.07
1 b	-7.10	0.87	0.00	0.00	0.87	0.21
1 c	-11.87	1.64	0.00	0.00	-0.02	0.03
1 right	-13.22	1.88	0.00	0.00	-0.02	0.03
2 left	-6.17	2.62	0.00	0.00	-0.14	0.00
2 a	-5.23	2.40	0.00	0.00	-0.15	0.00
2 b	-0.39	1.21	0.00	0.00	3.70	-0.02
2 c	0.23	1.01	0.00	0.00	3.97	-0.42
2 right	-4.44	1.81	0.00	0.00	0.50	1.22
3 left	-4.19	2.08	0.00	0.00	2.33	0.26
3 a	-3.38	1.87	0.00	0.00	2.80	0.82
3 b	0.39	0.79	0.00	0.00	3.96	0.13
3 c	0.56	0.67	0.00	0.00	3.58	0.01
3 right	-4.71	1.53	0.00	0.00	2.29	1.01
4 left	-4.95	1.28	0.00	0.00	0.49	1.16
4 a	-4.08	1.08	0.00	0.00	1.53	0.74
4 b	0.29	0.02	0.00	0.00	3.87	-0.22
4 c	0.72	-0.10	0.00	0.00	3.98	-0.57
4 right	-4.68	1.12	0.00	0.00	-0.10	0.00
5 left	-6.87	1.02	0.00	0.00	0.04	0.05
5 a	-5.84	0.83	0.00	0.00	0.03	0.04
5 b	-2.43	0.26	0.00	0.00	0.01	0.01
5 c	-0.33	0.03	0.00	0.00	0.00	0.00
6 a	-0.73	-0.46	0.00	0.00	0.61	-0.20
6 b	-0.25	-0.06	0.00	0.00	0.51	-0.02
6 c	0.82	1.25	0.00	0.00	0.02	-0.12
7 a	-1.34	0.48	0.00	0.00	0.35	-0.49
7 b	-0.79	0.78	0.00	0.00	0.28	-0.38
7 c	0.79	1.51	0.00	0.00	0.02	-0.11
8 top	-7.05	-4.04	0.00	0.00	4.52	-1.87
8 a	-6.42	-3.51	0.00	0.00	3.87	-1.63
8 b	-4.22	-1.54	0.00	0.00	2.05	-0.81
8 c	-2.02	0.16	0.00	0.00	0.61	-0.29
9 top	-0.24	-2.88	0.00	0.00	4.62	-2.01
9 a	-0.01	-2.46	0.00	0.00	3.91	-1.75
9 b	0.81	-0.88	0.00	0.00	1.96	-0.89
9 c	1.63	0.44	0.00	0.00	0.31	-0.18
10 top	0.24	-3.08	0.00	0.00	7.16	-1.50
10 a	0.04	-2.64	0.00	0.00	6.18	-1.29
10 b	-0.70	-1.02	0.00	0.00	3.25	-0.58
10 c	-1.43	0.37	0.00	0.00	0.71	-0.18
11 top	2.19	-3.37	0.00	0.00	-0.09	0.02
11 a	2.11	-2.91	0.00	0.00	-0.06	0.02
11 b	1.81	-1.21	0.00	0.00	0.03	0.03
11 c	1.50	0.28	0.00	0.00	0.17	0.04

1_III_A_SL_HL93_truck_EL.OUT 9/11/2009

VEH: HL93- TRUCK - S BRUG(5.75.44) page 56
date 11/09/2009; time 14:42:35
Cline Avenue - STRIPED LANES - Double Box - 4 Webs - 64.125'

Summary of the results (Minimum)

Section	--- Deadload ----		----- P.T. ------		--- Live load ---	
	Moment	Ax.Frc	Moment	Ax.Frc	Moment	Ax.Frc
1 a	-3.62	0.38	0.00	0.00	-0.08	0.08
1 b	-7.10	0.87	0.00	0.00	-0.23	0.20
1 c	-11.87	1.64	0.00	0.00	-3.06	0.67
1 right	-13.22	1.88	0.00	0.00	-5.14	0.93
2 left	-6.17	2.62	0.00	0.00	-6.05	-0.11
2 a	-5.23	2.40	0.00	0.00	-5.33	-0.18
2 b	-0.39	1.21	0.00	0.00	-0.72	-0.24
2 c	0.23	1.01	0.00	0.00	-0.34	0.20
2 right	-4.44	1.81	0.00	0.00	-6.02	-0.38
3 left	-4.19	2.08	0.00	0.00	-6.00	0.20
3 a	-3.38	1.87	0.00	0.00	-5.26	0.13
3 b	0.39	0.79	0.00	0.00	-1.08	-0.06
3 c	0.56	0.67	0.00	0.00	-0.40	-0.03
3 right	-4.71	1.53	0.00	0.00	-5.88	0.19
4 left	-4.95	1.28	0.00	0.00	-6.04	-0.54
4 a	-4.08	1.08	0.00	0.00	-5.11	-0.65
4 b	0.29	0.02	0.00	0.00	-0.30	0.17
4 c	0.72	-0.10	0.00	0.00	-0.33	0.18
4 right	-4.68	1.12	0.00	0.00	-6.00	-0.25
5 left	-6.87	1.02	0.00	0.00	-1.52	0.47
5 a	-5.84	0.83	0.00	0.00	-1.02	0.34
5 b	-2.43	0.26	0.00	0.00	-0.18	0.08
5 c	-0.33	0.03	0.00	0.00	-0.02	0.01
6 a	-0.73	-0.46	0.00	0.00	-0.32	0.27
6 b	-0.25	-0.06	0.00	0.00	-0.27	0.29
6 c	0.82	1.25	0.00	0.00	-0.05	0.94
7 a	-1.34	0.48	0.00	0.00	-0.46	0.96
7 b	-0.79	0.78	0.00	0.00	-0.38	0.98
7 c	0.79	1.51	0.00	0.00	-0.05	0.95
8 top	-7.05	-4.04	0.00	0.00	-2.09	-6.60
8 a	-6.42	-3.51	0.00	0.00	-1.73	-5.59
8 b	-4.22	-1.54	0.00	0.00	-0.70	-2.51
8 c	-2.02	0.16	0.00	0.00	-0.13	0.03
9 top	-0.24	-2.88	0.00	0.00	-7.02	-1.51
9 a	-0.01	-2.46	0.00	0.00	-6.06	-1.30
9 b	0.81	-0.88	0.00	0.00	-3.18	-0.59
9 c	1.63	0.44	0.00	0.00	-0.70	-0.18
10 top	0.24	-3.08	0.00	0.00	-4.51	-2.00
10 a	0.04	-2.64	0.00	0.00	-3.81	-1.74
10 b	-0.70	-1.02	0.00	0.00	-1.90	-0.88
10 c	-1.43	0.37	0.00	0.00	-0.30	-0.18
11 top	2.19	-3.37	0.00	0.00	-4.51	-1.87
11 a	2.11	-2.91	0.00	0.00	-3.86	-1.63
11 b	1.81	-1.21	0.00	0.00	-2.05	-0.81
11 c	1.50	0.28	0.00	0.00	-0.61	-0.29

1_III_A_SL_HL93_tandem_EL.OUT 9/11/2009

VEH: HL93- TANDEM- S BRUG(5.75.44) page 55
date 11/09/2009; time 14:42:34
Cline Avenue - STRIPED LANES - Double Box - 4 Webs - 64.125'

Summary of the results (Maximum)

Section	--- Deadload ----		----- P.T. ------		--- Live load ---	
	Moment	Ax.Frc	Moment	Ax.Frc	Moment	Ax.Frc
1 a	-3.62	0.38	0.00	0.00	0.12	0.10
1 b	-7.10	0.87	0.00	0.00	0.54	0.29
1 c	-11.87	1.64	0.00	0.00	-0.01	0.01
1 right	-13.22	1.88	0.00	0.00	-0.02	0.02
2 left	-6.17	2.62	0.00	0.00	-0.11	-0.01
2 a	-5.23	2.40	0.00	0.00	-0.12	-0.01
2 b	-0.39	1.21	0.00	0.00	3.35	-0.01
2 c	0.23	1.01	0.00	0.00	3.69	-0.38
2 right	-4.44	1.81	0.00	0.00	-0.19	0.15
3 left	-4.19	2.08	0.00	0.00	1.26	0.21
3 a	-3.38	1.87	0.00	0.00	1.24	0.18
3 b	0.39	0.79	0.00	0.00	3.53	0.09
3 c	0.56	0.67	0.00	0.00	3.38	-0.07
3 right	-4.71	1.53	0.00	0.00	0.50	1.05
4 left	-4.95	1.28	0.00	0.00	-0.27	0.21
4 a	-4.08	1.08	0.00	0.00	0.30	0.87
4 b	0.29	0.02	0.00	0.00	3.49	-0.15
4 c	0.72	-0.10	0.00	0.00	3.70	-0.51
4 right	-4.68	1.12	0.00	0.00	-0.08	-0.01
5 left	-6.87	1.02	0.00	0.00	0.10	0.03
5 a	-5.84	0.83	0.00	0.00	0.08	0.02
5 b	-2.43	0.26	0.00	0.00	0.02	0.01
5 c	-0.33	0.03	0.00	0.00	0.00	0.00
6 a	-0.73	-0.46	0.00	0.00	0.45	-0.09
6 b	-0.25	-0.06	0.00	0.00	0.38	0.11
6 c	0.82	1.25	0.00	0.00	0.02	-0.07
7 a	-1.34	0.48	0.00	0.00	0.31	-0.24
7 b	-0.79	0.78	0.00	0.00	0.23	-0.08
7 c	0.79	1.51	0.00	0.00	0.02	-0.07
8 top	-7.05	-4.04	0.00	0.00	4.50	-2.10
8 a	-6.42	-3.51	0.00	0.00	3.80	-1.86
8 b	-4.22	-1.54	0.00	0.00	1.90	-0.96
8 c	-2.02	0.16	0.00	0.00	0.49	-0.33
9 top	-0.24	-2.88	0.00	0.00	4.53	-2.37
9 a	-0.01	-2.46	0.00	0.00	3.79	-2.10
9 b	0.81	-0.88	0.00	0.00	1.78	-1.04
9 c	1.63	0.44	0.00	0.00	0.24	-0.19
10 top	0.24	-3.08	0.00	0.00	6.45	-2.28
10 a	0.04	-2.64	0.00	0.00	5.33	-1.68
10 b	-0.70	-1.02	0.00	0.00	2.69	-0.84
10 c	-1.43	0.37	0.00	0.00	0.55	-0.26
11 top	2.19	-3.37	0.00	0.00	-0.06	0.01
11 a	2.11	-2.91	0.00	0.00	-0.05	0.01
11 b	1.81	-1.21	0.00	0.00	0.02	0.02
11 c	1.50	0.28	0.00	0.00	0.14	0.04

1_III_A_SL_HL93_tandem_EL.OUT 9/11/2009

VEH: HL93- TANDEM- S BRUG(5.75.44) page 56
date 11/09/2009; time 14:42:34
Cline Avenue - STRIPED LANES - Double Box - 4 Webs - 64.125'

Summary of the results (Minimum)

Section	--- Deadload ----		----- P.T. ------		--- Live load ---	
	Moment	Ax.Frc	Moment	Ax.Frc	Moment	Ax.Frc
1 a	-3.62	0.38	0.00	0.00	-0.15	0.10
1 b	-7.10	0.87	0.00	0.00	-0.43	0.24
1 c	-11.87	1.64	0.00	0.00	-3.57	0.78
1 right	-13.22	1.88	0.00	0.00	-5.47	0.99
2 left	-6.17	2.62	0.00	0.00	-6.86	0.08
2 a	-5.23	2.40	0.00	0.00	-6.04	-0.13
2 b	-0.39	1.21	0.00	0.00	-0.69	-0.22
2 c	0.23	1.01	0.00	0.00	-0.29	0.18
2 right	-4.44	1.81	0.00	0.00	-6.89	-0.06
3 left	-4.19	2.08	0.00	0.00	-6.53	0.19
3 a	-3.38	1.87	0.00	0.00	-5.67	0.10
3 b	0.39	0.79	0.00	0.00	-0.72	-0.06
3 c	0.56	0.67	0.00	0.00	-0.35	-0.02
3 right	-4.71	1.53	0.00	0.00	-6.45	0.18
4 left	-4.95	1.28	0.00	0.00	-6.91	-0.18
4 a	-4.08	1.08	0.00	0.00	-6.11	-0.40
4 b	0.29	0.02	0.00	0.00	-0.20	0.10
4 c	0.72	-0.10	0.00	0.00	-0.29	0.16
4 right	-4.68	1.12	0.00	0.00	-6.79	-0.09
5 left	-6.87	1.02	0.00	0.00	-2.18	0.53
5 a	-5.84	0.83	0.00	0.00	-1.58	0.41
5 b	-2.43	0.26	0.00	0.00	-0.33	0.11
5 c	-0.33	0.03	0.00	0.00	-0.05	0.01
6 a	-0.73	-0.46	0.00	0.00	-0.26	0.21
6 b	-0.25	-0.06	0.00	0.00	-0.22	0.23
6 c	0.82	1.25	0.00	0.00	-0.04	0.99
7 a	-1.34	0.48	0.00	0.00	-0.36	0.85
7 b	-0.79	0.78	0.00	0.00	-0.28	0.90
7 c	0.79	1.51	0.00	0.00	-0.04	0.99
8 top	-7.05	-4.04	0.00	0.00	-1.47	-5.95
8 a	-6.42	-3.51	0.00	0.00	-1.24	-5.22
8 b	-4.22	-1.54	0.00	0.00	-0.50	-2.66
8 c	-2.02	0.16	0.00	0.00	-0.09	0.02
9 top	-0.24	-2.88	0.00	0.00	-6.35	-2.29
9 a	-0.01	-2.46	0.00	0.00	-5.24	-1.68
9 b	0.81	-0.88	0.00	0.00	-2.64	-0.84
9 c	1.63	0.44	0.00	0.00	-0.55	-0.26
10 top	0.24	-3.08	0.00	0.00	-4.45	-2.36
10 a	0.04	-2.64	0.00	0.00	-3.73	-2.09
10 b	-0.70	-1.02	0.00	0.00	-1.75	-1.04
10 c	-1.43	0.37	0.00	0.00	-0.23	-0.19
11 top	2.19	-3.37	0.00	0.00	-4.51	-2.09
11 a	2.11	-2.91	0.00	0.00	-3.81	-1.85
11 b	1.81	-1.21	0.00	0.00	-1.91	-0.96
11 c	1.50	0.28	0.00	0.00	-0.50	-0.33

PtBridge, Inc. BRUG(5.75.44) page 55
date 11/09/2009; time 14:42:43
Cline Avenue - STRIPED LANES - Double Box - 4 Webs - 64.125'

Summary of the results (Maximum)

Section	--- Deadload ----		----- P.T. ------		--- Live load ---	
	Moment	Ax.Frc	Moment	Ax.Frc	Moment	Ax.Frc
1 a	-3.62	0.38	0.00	0.00	0.14	0.04
1 b	-7.10	0.87	0.00	0.00	1.01	0.12
1 c	-11.87	1.64	0.00	0.00	0.60	0.25
1 right	-13.22	1.88	0.00	0.00	0.31	0.38
2 left	-6.17	2.62	0.00	0.00	0.96	0.90
2 a	-5.23	2.40	0.00	0.00	1.57	0.43
2 b	-0.39	1.21	0.00	0.00	3.70	-0.02
2 c	0.23	1.01	0.00	0.00	4.73	-0.56
2 right	-4.44	1.81	0.00	0.00	1.40	0.66
3 left	-4.19	2.08	0.00	0.00	4.34	1.39
3 a	-3.38	1.87	0.00	0.00	4.99	1.05
3 b	0.39	0.79	0.00	0.00	4.62	0.22
3 c	0.56	0.67	0.00	0.00	4.34	0.06
3 right	-4.71	1.53	0.00	0.00	3.28	1.25
4 left	-4.95	1.28	0.00	0.00	1.40	0.62
4 a	-4.08	1.08	0.00	0.00	2.21	0.73
4 b	0.29	0.02	0.00	0.00	4.54	-0.35
4 c	0.72	-0.10	0.00	0.00	4.71	-0.84
4 right	-4.68	1.12	0.00	0.00	0.00	0.00
5 left	-6.87	1.02	0.00	0.00	0.04	0.05
5 a	-5.84	0.83	0.00	0.00	0.03	0.04
5 b	-2.43	0.26	0.00	0.00	0.01	0.01
5 c	-0.33	0.03	0.00	0.00	0.00	0.00
6 a	-0.73	-0.46	0.00	0.00	0.64	-0.02
6 b	-0.25	-0.06	0.00	0.00	0.55	0.38
6 c	0.82	1.25	0.00	0.00	0.04	-0.24
7 a	-1.34	0.48	0.00	0.00	0.61	-0.67
7 b	-0.79	0.78	0.00	0.00	0.50	-0.47
7 c	0.79	1.51	0.00	0.00	0.03	-0.23
8 top	-7.05	-4.04	0.00	0.00	6.19	-4.96
8 a	-6.42	-3.51	0.00	0.00	5.22	-4.23
8 b	-4.22	-1.54	0.00	0.00	2.76	-1.53
8 c	-2.02	0.16	0.00	0.00	0.81	-0.60
9 top	-0.24	-2.88	0.00	0.00	7.62	-2.46
9 a	-0.01	-2.46	0.00	0.00	6.57	-2.16
9 b	0.81	-0.88	0.00	0.00	3.42	-1.14
9 c	1.63	0.44	0.00	0.00	0.57	-0.27
10 top	0.24	-3.08	0.00	0.00	10.04	-3.91
10 a	0.04	-2.64	0.00	0.00	8.58	-3.32
10 b	-0.70	-1.02	0.00	0.00	4.50	-1.44
10 c	-1.43	0.37	0.00	0.00	1.04	-0.52
11 top	2.19	-3.37	0.00	0.00	0.01	-2.00
11 a	2.11	-2.91	0.00	0.00	0.08	-1.67
11 b	1.81	-1.21	0.00	0.00	0.05	0.06
11 c	1.50	0.28	0.00	0.00	0.31	0.08

PtBridge, Inc. BRUG(5.75.44) page 56
date 11/09/2009; time 14:42:43
Cline Avenue - STRIPED LANES - Double Box - 4 Webs - 64.125'

Summary of the results (Minimum)

Section	--- Deadload ----		----- P.T. ------		--- Live load ---	
	Moment	Ax.Frc	Moment	Ax.Frc	Moment	Ax.Frc
1 a	-3.62	0.38	0.00	0.00	-0.10	0.11
1 b	-7.10	0.87	0.00	0.00	-0.30	0.28
1 c	-11.87	1.64	0.00	0.00	-3.77	1.01
1 right	-13.22	1.88	0.00	0.00	-6.14	1.34
2 left	-6.17	2.62	0.00	0.00	-8.48	0.63
2 a	-5.23	2.40	0.00	0.00	-6.95	-0.28
2 b	-0.39	1.21	0.00	0.00	-1.09	-0.21
2 c	0.23	1.01	0.00	0.00	-0.62	0.31
2 right	-4.44	1.81	0.00	0.00	-8.05	-0.48
3 left	-4.19	2.08	0.00	0.00	-9.44	0.17
3 a	-3.38	1.87	0.00	0.00	-8.43	0.09
3 b	0.39	0.79	0.00	0.00	-1.97	-0.05
3 c	0.56	0.67	0.00	0.00	-0.79	0.04
3 right	-4.71	1.53	0.00	0.00	-9.20	0.20
4 left	-4.95	1.28	0.00	0.00	-7.77	-0.53
4 a	-4.08	1.08	0.00	0.00	-6.00	-0.66
4 b	0.29	0.02	0.00	0.00	-0.68	0.45
4 c	0.72	-0.10	0.00	0.00	-0.60	0.30
4 right	-4.68	1.12	0.00	0.00	-7.88	-0.32
5 left	-6.87	1.02	0.00	0.00	-1.77	0.80
5 a	-5.84	0.83	0.00	0.00	-1.20	0.57
5 b	-2.43	0.26	0.00	0.00	-0.21	0.12
5 c	-0.33	0.03	0.00	0.00	-0.03	0.01
6 a	-0.73	-0.46	0.00	0.00	-0.55	0.33
6 b	-0.25	-0.06	0.00	0.00	-0.47	0.33
6 c	0.82	1.25	0.00	0.00	-0.08	1.53
7 a	-1.34	0.48	0.00	0.00	-0.46	0.96
7 b	-0.79	0.78	0.00	0.00	-0.38	0.98
7 c	0.79	1.51	0.00	0.00	-0.07	1.51
8 top	-7.05	-4.04	0.00	0.00	-3.66	-3.82
8 a	-6.42	-3.51	0.00	0.00	-2.97	-3.23
8 b	-4.22	-1.54	0.00	0.00	-1.37	-1.42
8 c	-2.02	0.16	0.00	0.00	-0.32	0.08
9 top	-0.24	-2.88	0.00	0.00	-11.35	-4.80
9 a	-0.01	-2.46	0.00	0.00	-9.73	-4.02
9 b	0.81	-0.88	0.00	0.00	-5.07	-1.67
9 c	1.63	0.44	0.00	0.00	-1.04	-0.47
10 top	0.24	-3.08	0.00	0.00	-7.39	-2.43
10 a	0.04	-2.64	0.00	0.00	-6.37	-2.13
10 b	-0.70	-1.02	0.00	0.00	-3.30	-1.12
10 c	-1.43	0.37	0.00	0.00	-0.55	-0.26
11 top	2.19	-3.37	0.00	0.00	-6.15	-4.95
11 a	2.11	-2.91	0.00	0.00	-5.19	-4.22
11 b	1.81	-1.21	0.00	0.00	-2.74	-1.94
11 c	1.50	0.28	0.00	0.00	-0.79	-0.49

VEH: HL93- TANDEM BRUG(5.75.44) page 55
date 11/09/2009; time 14:42:42
Cline Avenue - STRIPED LANES - Double Box - 4 Webs - 64.125'

Summary of the results (Maximum)

Section	--- Deadload ---		----- P.T. ------		--- Live load ---	
	Moment	Ax.Frc	Moment	Ax.Frc	Moment	Ax.Frc
1 a	-3.62	0.38	0.00	0.00	0.13	0.11
1 b	-7.10	0.87	0.00	0.00	0.56	0.31
1 c	-11.87	1.64	0.00	0.00	0.08	0.04
1 right	-13.22	1.88	0.00	0.00	0.11	0.05
2 left	-6.17	2.62	0.00	0.00	-0.11	-0.01
2 a	-5.23	2.40	0.00	0.00	-0.12	-0.01
2 b	-0.39	1.21	0.00	0.00	3.35	-0.01
2 c	0.23	1.01	0.00	0.00	4.46	-0.51
2 right	-4.44	1.81	0.00	0.00	-0.19	0.15
3 left	-4.19	2.08	0.00	0.00	1.41	1.38
3 a	-3.38	1.87	0.00	0.00	2.06	1.20
3 b	0.39	0.79	0.00	0.00	3.87	0.08
3 c	0.56	0.67	0.00	0.00	4.12	-0.02
3 right	-4.71	1.53	0.00	0.00	0.50	1.05
4 left	-4.95	1.28	0.00	0.00	-0.27	0.21
4 a	-4.08	1.08	0.00	0.00	0.30	0.87
4 b	0.29	0.02	0.00	0.00	3.74	-0.56
4 c	0.72	-0.10	0.00	0.00	4.43	-0.73
4 right	-4.68	1.12	0.00	0.00	-0.08	-0.01
5 left	-6.87	1.02	0.00	0.00	0.10	0.03
5 a	-5.84	0.83	0.00	0.00	0.08	0.02
5 b	-2.43	0.26	0.00	0.00	0.02	0.01
5 c	-0.33	0.03	0.00	0.00	0.00	0.00
6 a	-0.73	-0.46	0.00	0.00	0.45	-0.09
6 b	-0.25	-0.06	0.00	0.00	0.38	0.11
6 c	0.82	1.25	0.00	0.00	0.03	-0.15
7 a	-1.34	0.48	0.00	0.00	0.52	-0.62
7 b	-0.79	0.78	0.00	0.00	0.40	-0.39
7 c	0.79	1.51	0.00	0.00	0.03	-0.15
8 top	-7.05	-4.04	0.00	0.00	6.06	-4.68
8 a	-6.42	-3.51	0.00	0.00	5.10	-4.11
8 b	-4.22	-1.54	0.00	0.00	2.55	-2.10
8 c	-2.02	0.16	0.00	0.00	0.64	-0.66
9 top	-0.24	-2.88	0.00	0.00	6.63	-3.32
9 a	-0.01	-2.46	0.00	0.00	5.63	-2.94
9 b	0.81	-0.88	0.00	0.00	2.75	-1.19
9 c	1.63	0.44	0.00	0.00	0.41	-0.24
10 top	0.24	-3.08	0.00	0.00	7.63	-6.99
10 a	0.04	-2.64	0.00	0.00	6.57	-6.12
10 b	-0.70	-1.02	0.00	0.00	3.46	-3.06
10 c	-1.43	0.37	0.00	0.00	0.79	-0.66
11 top	2.19	-3.37	0.00	0.00	-0.06	0.01
11 a	2.11	-2.91	0.00	0.00	-0.05	0.01
11 b	1.81	-1.21	0.00	0.00	0.03	0.06
11 c	1.50	0.28	0.00	0.00	0.23	0.06

VEH: HL93- TANDEM BRUG(5.75.44) page 56
date 11/09/2009; time 14:42:42
Cline Avenue - STRIPED LANES - Double Box - 4 Webs - 64.125'

Summary of the results (Minimum)

Section	--- Deadload ---		----- P.T. ------		--- Live load ---	
	Moment	Ax.Frc	Moment	Ax.Frc	Moment	Ax.Frc
1 a	-3.62	0.38	0.00	0.00	-0.16	0.16
1 b	-7.10	0.87	0.00	0.00	-0.47	0.42
1 c	-11.87	1.64	0.00	0.00	-4.75	1.15
1 right	-13.22	1.88	0.00	0.00	-7.07	1.43
2 left	-6.17	2.62	0.00	0.00	-9.81	1.12
2 a	-5.23	2.40	0.00	0.00	-7.80	0.84
2 b	-0.39	1.21	0.00	0.00	-0.90	-0.13
2 c	0.23	1.01	0.00	0.00	-0.48	0.23
2 right	-4.44	1.81	0.00	0.00	-9.13	0.84
3 left	-4.19	2.08	0.00	0.00	-8.85	0.25
3 a	-3.38	1.87	0.00	0.00	-7.69	0.04
3 b	0.39	0.79	0.00	0.00	-1.35	-0.08
3 c	0.56	0.67	0.00	0.00	-0.70	0.04
3 right	-4.71	1.53	0.00	0.00	-8.69	0.26
4 left	-4.95	1.28	0.00	0.00	-9.16	0.65
4 a	-4.08	1.08	0.00	0.00	-7.10	0.15
4 b	0.29	0.02	0.00	0.00	-0.61	0.36
4 c	0.72	-0.10	0.00	0.00	-0.47	0.22
4 right	-4.68	1.12	0.00	0.00	-8.49	0.03
5 left	-6.87	1.02	0.00	0.00	-2.51	0.84
5 a	-5.84	0.83	0.00	0.00	-1.82	0.65
5 b	-2.43	0.26	0.00	0.00	-0.39	0.17
5 c	-0.33	0.03	0.00	0.00	-0.06	0.02
6 a	-0.73	-0.46	0.00	0.00	-0.43	0.51
6 b	-0.25	-0.06	0.00	0.00	-0.36	0.26
6 c	0.82	1.25	0.00	0.00	-0.06	1.61
7 a	-1.34	0.48	0.00	0.00	-0.36	0.85
7 b	-0.79	0.78	0.00	0.00	-0.28	0.90
7 c	0.79	1.51	0.00	0.00	-0.06	1.58
8 top	-7.05	-4.04	0.00	0.00	-1.47	-5.95
8 a	-6.42	-3.51	0.00	0.00	-1.24	-5.22
8 b	-4.22	-1.54	0.00	0.00	-0.51	-2.64
8 c	-2.02	0.16	0.00	0.00	-0.24	0.06
9 top	-0.24	-2.88	0.00	0.00	-9.50	-4.67
9 a	-0.01	-2.46	0.00	0.00	-8.12	-4.09
9 b	0.81	-0.88	0.00	0.00	-4.10	-2.01
9 c	1.63	0.44	0.00	0.00	-0.79	-0.61
10 top	0.24	-3.08	0.00	0.00	-6.48	-3.30
10 a	0.04	-2.64	0.00	0.00	-5.49	-2.92
10 b	-0.70	-1.02	0.00	0.00	-2.68	-1.18
10 c	-1.43	0.37	0.00	0.00	-0.40	-0.24
11 top	2.19	-3.37	0.00	0.00	-6.06	-4.65
11 a	2.11	-2.91	0.00	0.00	-5.10	-4.10
11 b	1.81	-1.21	0.00	0.00	-2.55	-2.10
11 c	1.50	0.28	0.00	0.00	-0.61	-0.53

4.7 3D Analysis Section IIIB

URS

4.7/1

Page ____ of ____

Job CLINE AVENUE LOAD RATING | Project No. ____ | Sheet ____ of ____

Description TRANSVERSE ANALYSIS | Computed by PT | Date 1/21/09

Checked by [illegible] | Date 01/23/09

Reference

CASE III B . TWO ADJACENT BOXES (4 WEBS) (See cross section notes on case III A)

Worst case location.
sta 136+94.86

width = 71.105 ft ≈
Height = 10.063 ft.
bottom slab thickness = 5.50 in.
(Tango joint 36, RM segment 359)

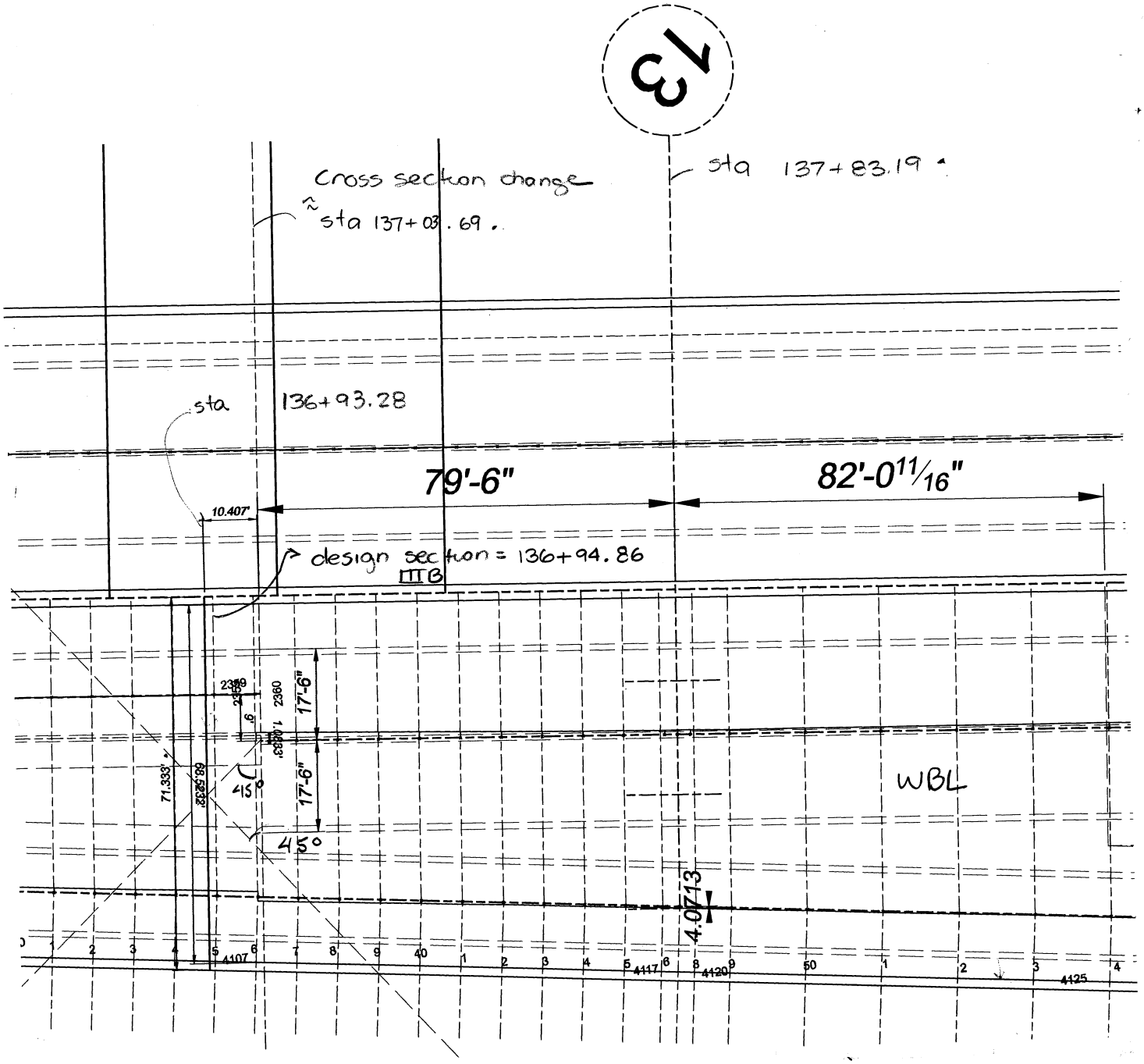

Continuation

CASE III B TWO ADJACENT BOXES (4 WEBS)

Two locations were investigated to determine the worst case. The cross section between Piers 12' and 13', WBL, segment 2 was chosen because it had the maximum width for a double box section, width ≅ 71.418'.

① Pier 12 - 13 — WBL Segment 3 - Maximum width with cross section = 71.418'.

Approximately, the cross section change is assumed to be at sta 137+03.69 joint (37 in Tango), (360 RM), in the span between piers 12' and 13'.

Bridge width @ Pier 12 = 64.125'.
Bridge width @ Pier 13 = 74.2'. controls

② Pier 16 - 17 - EBL Segment 4 - Maximum width with cross section = 70.29'

Approximately, the cross section change occurs at sta 148+08.49. in the spans between, Pier 16 and 17

Bridge width @ Pier 16 ≅ 66.82'
@ Pier 17 ≅ 71.12'

4.7.1 Brug Model

BRUG SECTIONS

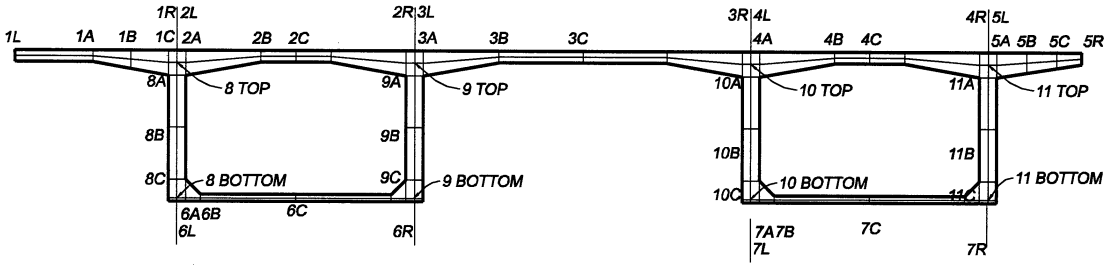

DEM
01/23/09

9.7.1/1

HALF SIZE PRINT - 11x17

Designed by
Drawn by R.V.A.
Checked by
Approved by

URS

URS Corporation Southern
7650 Corporate Center Drive
Suite 400
Miami, FL 33126-1220
Tel: (305) 262-7400
C.A. No. EB 00000002

TYPICAL SECTION - Transverse Analysis

SECTION IIIB

BRUG MODEL

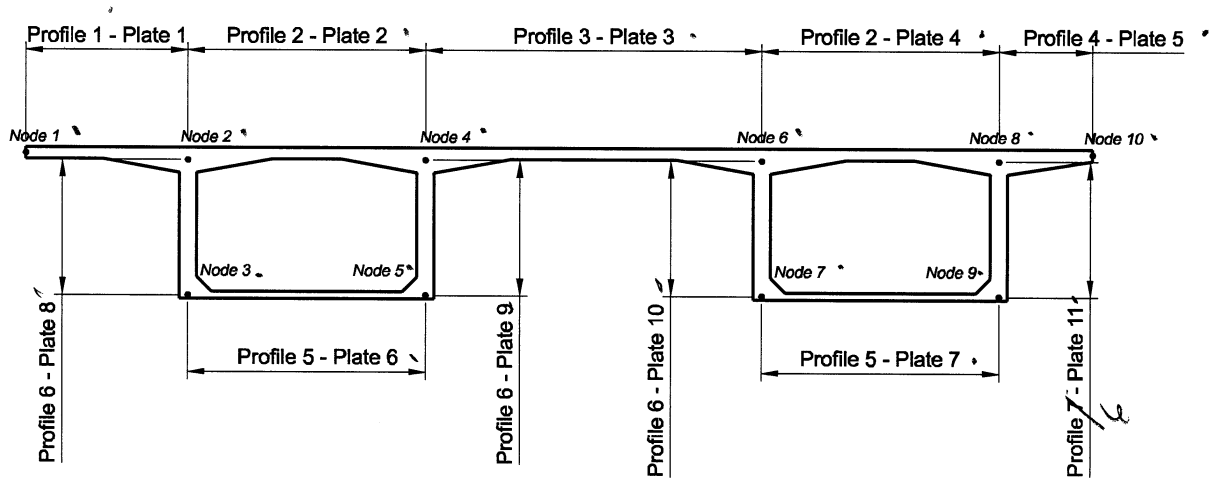

DRW
01/23/09

4.7.1/2

HALF SIZE PRINT - 11x17				
No. Date App. Revisions	Designed by			
	Drawn by R.V.A.			
	Checked by			
	DRAWING SCALE:			

URS Corporation Southern
7650 Corporate Center Drive
Suite 400
Miami, FL 33126-1220
Tel: (305) 262-7498
C.A. No. EB 00000002

TYPICAL SECTION - Transverse Analysis

SECTION IIIB

DRAWING NO.

SHEET NO.

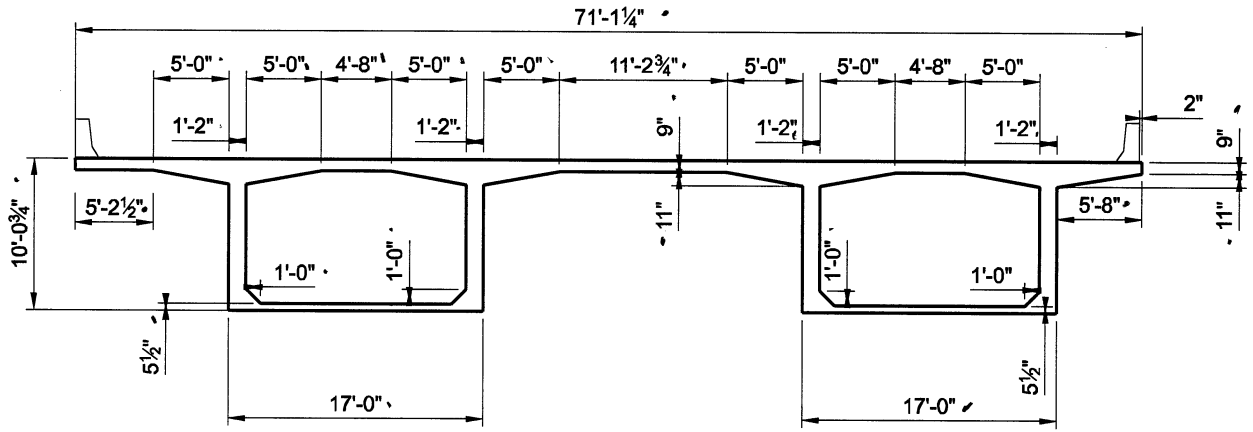

DIMENSIONS

DEM
01/23/09

4.7.1/3

HALF SIZE PRINT - 11x17

No.	Date	Appr.	Revisions

Designed by
Drawn by R.V.A.
Checked by
UNLESS SCALE

URS
URS Corporation Southern
7650 Corporate Center Drive
Suite 400
Miami, FL 33126-1220
Tel: (305) 262-7466
C.A. No. EB 00000002

TYPICAL SECTION - Transverse Analysis

SECTION IIIB

DRAWING NO.
SHEET NO.
NAME F.E. NO.
SPLICE

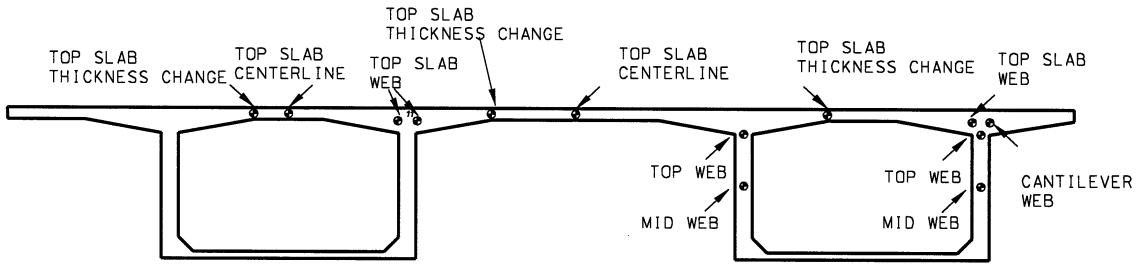

RATING POINTS

01/23/09

4.7.1/4

HALF SIZE PRINT - 11x17

Designed by
Drawn by R.V.A.
Checked by
DRAWING SCALE:

URS

URS Corporation Southern
7650 Corporate Center Drive
Suite 400
Miami, Fl. 33126-1220
Tel: (305) 262-7495
C.A. No. EB 00000002

TYPICAL SECTION - Transverse Analysis

SECTION IIIB

DRAWING NO.

SHEET NO.

URS CORPORATION	Made by:	PT	Date: 23-Jan-09	Job Number: 25626272.00001	Job Number: 25626272.00001
	Checked by:	DLM	Date: 01/23/09	Sheet Number:	Sheet Number:
Brug Joints and Members	Backchecked by:		Date:		

Data measured from Microstation File
V:\Projects\Cline Avenue\Load Rating Analysis\Transverse Analysis\Spreadsheet\[Brug Input.xls]Model_Joints Brugh_IIIB

GTStrudl Joint	X ft	Y ft	Height ft	BRUG NODE
1	0.0000	9.2297	0.750	1
2	5.2083	9.2297	0.750	
3	7.7083	9.2297	1.208	
4	10.2083	9.2297	1.667	
5	10.7917	9.2297	1.667	2
6	11.3750	9.2297	1.667	
7	16.3750	9.2297	0.750	
8	18.7083	9.2297	0.750	
9	21.0417	9.2297	0.750	
10	26.0417	9.2297	1.667	
11	26.6250	9.2297	1.667	4
12	27.2083	9.2297	1.667	
13	32.2083	9.2297	0.750	
14	37.8233	9.2297	0.750	
15	43.4383	9.2297	0.750	
16	48.4383	9.2297	1.667	
17	49.0217	9.2297	1.667	6
18	49.6050	9.2297	1.667	
19	54.6050	9.2297	0.750	
20	56.9383	9.2297	0.750	
21	59.2717	9.2297	0.750	
22	64.2717	9.2297	1.667	
23	64.8550	9.2297	1.667	8
24	65.4383	9.2297	1.667	
25	67.4383	9.2297	1.343	
26	69.4383	9.2297	1.020	
27	71.1050	9.2297	0.750	10
28	10.7917	8.3963	1.167	
29	10.7917	4.9273	1.167	
30	10.7917	1.4583	1.167	
31	10.7917	0.2292	1.167	3
32	11.3750	0.2292	1.458	
33	12.3750	0.2292	0.458	
34	18.7083	0.2292	0.458	
35	25.0417	0.2292	0.458	
36	26.0417	0.2292	1.458	
37	26.6250	0.2292	1.167	5
38	26.6250	1.4583	1.167	
39	26.6250	4.9273	1.167	
40	26.6250	8.3963	1.167	
42	49.0217	8.3963	1.167	
43	49.0217	4.9273	1.167	
44	49.0217	1.4583	1.167	
45	49.0217	0.2292	1.458	7
46	49.6050	0.2292	0.458	
47	50.6050	0.2292	0.458	
48	56.9383	0.2292	0.458	

GTStrudl MEMBER	BEGIN JOINT	END JOINT	Length ft
1	1	2	5.208
2	2	3	2.500
3	3	4	2.500
4	4	5	0.583
5	5	6	0.583
6	6	7	5.000
7	7	8	2.333
8	8	9	2.333
9	9	10	5.000
10	10	11	0.583
11	11	12	0.583
12	12	13	5.000
13	13	14	5.615
14	14	15	5.615
15	15	16	5.000
16	16	17	0.583
17	17	18	0.583
18	18	19	5.000
19	19	20	2.333
20	20	21	2.333
21	21	22	5.000
22	22	23	0.583
23	23	24	0.583
24	24	25	2.000
25	25	26	2.000
26	26	27	1.667
27	5	28	0.833
28	28	29	3.469
29	29	30	3.469
30	30	31	1.229
31	31	32	0.583
32	32	33	1.000
33	33	34	6.333
34	34	35	6.333
35	35	36	1.000
36	36	37	0.583
37	37	38	1.229
38	38	39	3.469
39	39	40	3.469
40	40	11	0.833
41	17	42	0.833
42	42	43	3.469
43	43	44	3.469
44	44	45	1.229
45	45	46	0.583
46	46	47	1.000
47	47	48	6.333

LEFT CANTILEVER (Profile 1)

GT Joint	Brug Section	Brug Joint	Length	Height
1	1L	1	0.0000	0.750
2	1A	2	5.2083	0.750
3	1B	3	7.7083	1.208
4	1C	4	10.2083	1.667
5	1R	5	10.7917	1.667

LEFT CELL (Profile 2)

GT Joint	Brug Section	Brug Joint	Length	Height
5	2L	1	0.0000	1.667
6	2A	2	0.5833	1.667
7	2B	3	5.5833	0.750
8	2C	4	7.9167	0.750
9		5	10.2500	0.750
10		6	15.2500	1.667
11	2R	7	15.8333	1.667

SPAN BETWEEN CELLS (Profile 3)

GT Joint	Brug Section	Brug Joint	Length	Height
11	3L	1	0.0000	1.667
12	3A	2	0.5833	1.667
13	3B	3	5.5833	0.750
14	3C	4	11.1983	0.750
15		5	16.8133	0.750
16		6	21.8133	1.667
17	3R	7	22.3967	1.667

RIGHT CANTILEVER (Profile 4)

GT Joint	Brug Section	Brug Joint	Length	Height
23	5L	1	0.0000	1.667
24	5A	2	0.5833	1.667
25	5B	3	2.5833	1.343
26	5C	4	4.5833	1.020
27	5R	5	6.2500	0.750

BOTTOM SLAB LEFT (Profile 5)

GT Joint	Brug Section	Brug Joint	Length	Height
31	6L	1	0.0000	1.458
32	6A	2	0.5833	1.458
33	6B	3	1.5833	0.458
34	6C	4	7.9167	0.458
35		5	14.2500	0.458
36		6	15.2500	1.458
37	6R	7	15.8333	1.458

LEFT WEB (Profile 6)

GT Joint	Brug Section	Brug Joint	Length	Height
5	8 TOP	1	0.0000	1.167
28	8A	2	0.8334	1.167
29	8B	3	4.3024	1.167
30	8C	4	7.7714	1.167
31	8 BOTTOM	5	9.0005	1.167

4.7.1/6

URS CORPORATION	Made by:	PT	Date: 23-Jan-09	Job Number: 25626272.00001	Job Number: 25626272.00001
	Checked by:	DCM	Date: 01/23/09	Sheet Number:	Sheet Number:
Brug Joints and Members	Backchecked by:		Date:		

Data measured from Microstation File
V:\Projects\Cline Avenue\Load Rating Analysis\Transverse Analysis\Spreadsheet\[Brug Input.xls]Model_Joints Brugh_IIIB

GTStrudl Joint	X ft	Y ft	Height ft	BRUG NODE
49	63.2717	0.2292	1.458	
50	64.2717	0.2292	1.167	
51	64.8550	0.2292	1.167	9
52	64.8550	1.4583	1.167	
53	64.8550	4.9273	1.167	
54	64.8550	8.3963	1.167	

GTStrudl MEMBER	BEGIN JOINT	END JOINT	Length ft
48	48	49	6.333
49	49	50	1.000
50	50	51	0.583
51	51	52	1.229
52	52	53	3.469
53	53	54	3.469
54	54	23	0.833

4.7.1/6

TRUCK LOCATION - NO TRAFFIC ON SHOULDERS

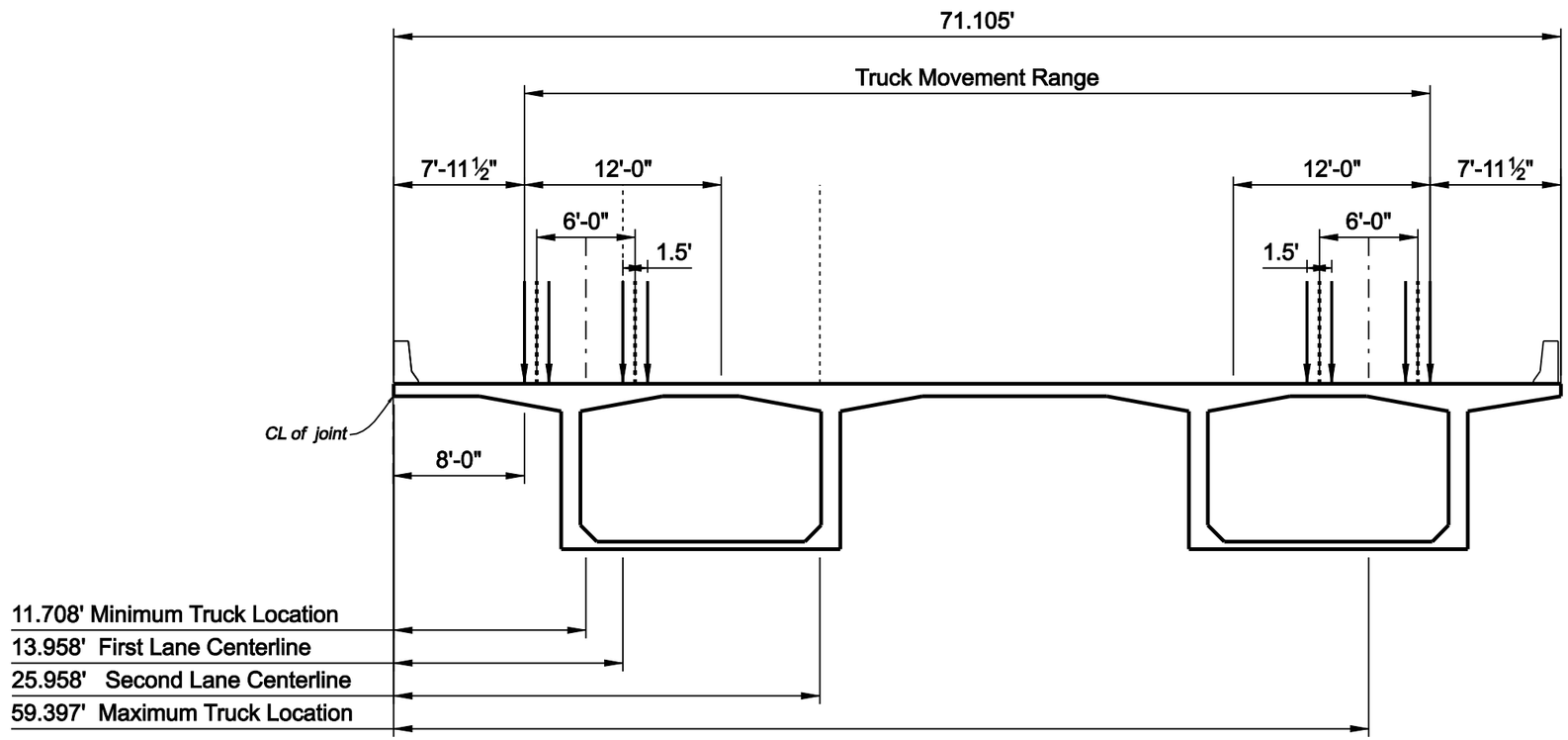

HALF SIZE PRINT - 11x17

No.	Date	App.	Revisions

Designed by
Drawn by R.V.A.
Checked by
DRAWING SCALE:

URS Corporation Southern
7650 Corporate Center Drive
Suite 400
Miami, FL 33126-1220
Tel: (305) 262-7466
C.A. No. EB 00000002

TYPICAL SECTION - Transverse Analysis

NAME FILE NO.

SECTION IIIB

DRAWING NO. SHEET NO.

patricia_theeler 7/22/2009 7:44:07 AM SPB_E3.5

Design by: PT 9/09
Independent Check by: RJB 9/09

4.7.1/ 7

4.7.2 Brug Input AASHTO Lanes

```
* start ; column 11-30 can be used to have your own text on the top of each page
*   5   10   15   20   25   30   35   40   45   50   55   60   65   70   75   80
*   V    V    V    V    V    V    V    V    V    V    V    V    V    V    V    V
00001  1 1     VEH: HL93- TRUCK - SINGLE TRUCK
* code 1001
Cline Avenue - Load Rating - Double Box - 4 Webs - 71.105' Wide - Single Vehicle
* code 1002
    2         1
* code 1003
*   5   10   15   20   25   30   35   40   45   50   55   60   65   70   75   80
*   V    V    V    V    V    V    V    V    V    V    V    V    V    V    V    V
250.0     170.0     71.1050   1.0       1.0       1.3
* code 1004
    1    0    2
* code 1005
   72    1
* code 1005a
* location traffic lanes
7.667
* maximum and minimum truck
6.667     64.438    10.000
* code 1007, linear loads
0.7350    0.441
70.37     0.441
* code 1201
   10    6    5    2    4
* code 1202 coordinates
0.0000    0.0
10.7917   0.0
10.7917   -9.0005
26.6250   0.0
26.6250   -9.0005
49.0217   0.0
49.0217   -9.0005
64.8550   0.0
64.8550   -9.0005
71.1050   0.0
* code 1203 - profile 1
    5    2    3    4
0.0000    0.750
5.2083    0.750
7.7083    1.208
10.2083   1.667
10.7917   1.667
* code 1203 - profile 2
    7    2    3    4
0.0000    1.667
0.5833    1.667
5.5833    0.750
7.9167    0.750
10.2500   0.750
15.2500   1.667
15.8333   1.667
* code 1203 - profile 3
    7    2    3    4
0.0000    1.667
0.5833    1.667
5.5833    0.750
11.1983   0.750
16.8133   0.750
21.8133   1.667
22.3967   1.667
* code 1203 - profile 4
    5    2    3    4
0.0000    1.667
0.5833    1.667
2.5833    1.343
4.5833    1.020
6.2500    0.750
* code 1203 - profile 5
    7    2    3    4
0.0000    1.458
0.5833    1.458
1.5833    0.458
7.9167    0.458
14.2500   0.458
15.2500   1.458
15.8333   1.458
* code 1203 - profile 6
    5    2    3    4
0.0000    1.167
```

```
0.8334    1.167
4.3204    1.167
7.7714    1.167
9.0005    1.167
* code 1204 - assembling boxgirder
    1    2    1
    2    4    2
    4    6    3
    6    8    2
    8   10    4
    3    5    5
    7    9    5
    2    3    6
    4    5    6
    6    7    6
    8    9    6
* code 1205 control code
    1    2   13    1    1    0    4    3     1.0       1.0
* code 1206 wheels/axle
       0.0
       1.5
       6.0
       7.5 0.833
* code 1207 definition axles
0.0       0.1
14.0      0.4
28.0      0.4
* code 1208 - accuracy
0.00001   0.00001   0.00001   .00001    .00001
* code 1209 number sections
   45
   1A   1B   1C   1R   2L   2A   2B   2C   2R   3L   3A   3B   3C   3R
   4L   4A   4B   4C   4R   5L   5A   5B   5C
   6A   6B   6C   7A   7B   7C   8L   8A   8B   8C   9L   9A   9B   9C
  10L  10A  10B  10C  11L  11A  11B  11C
* code 1210 - density conrete
0.156
* code 1211 - extra forces selfweight

* code 1212 - surcharge
1.777
* code 1213 - Prestressing Layout - NONE
•
```

```
* start ; column 11-30 can be used to have your own text on the top of each page
*   5   10   15   20   25   30   35   40   45   50   55   60   65   70   75   80
*   V    V    V    V    V    V    V    V    V    V    V    V    V    V    V    V
00001  1 1     VEH: HL93- TANDEM- SINGLE TRUCK
* code 1001
Cline Avenue - Load Rating - Double Box - 4 Webs - 71.105' Wide - Single Vehicle
* code 1002
    2         1
* code 1003
*   5   10   15   20   25   30   35   40   45   50   55   60   65   70   75   80
*   V    V    V    V    V    V    V    V    V    V    V    V    V    V    V    V
250.0     170.0     71.1050   1.0       1.0       1.3
* code 1004
    1    0    2
* code 1005
   50    1
* code 1005a
* location traffic lanes
7.667
* maximum and minimum truck
6.667     64.438    10.000
* code 1007, linear loads
0.7350    0.441
70.37     0.441
* code 1201
   10    6    5    2    4
* code 1202 coordinates
0.0000    0.0
10.7917   0.0
10.7917   -9.0005
26.6250   0.0
26.6250   -9.0005
49.0217   0.0
49.0217   -9.0005
64.8550   0.0
64.8550   -9.0005
71.1050   0.0
* code 1203 - profile 1
    5    2    3    4
0.0000    0.750
5.2083    0.750
7.7083    1.208
10.2083   1.667
10.7917   1.667
* code 1203 - profile 2
    7    2    3    4
0.0000    1.667
0.5833    1.667
5.5833    0.750
7.9167    0.750
10.2500   0.750
15.2500   1.667
15.8333   1.667
* code 1203 - profile 3
    7    2    3    4
0.0000    1.667
0.5833    1.667
5.5833    0.750
11.1983   0.750
16.8133   0.750
21.8133   1.667
22.3967   1.667
* code 1203 - profile 4
    5    2    3    4
0.0000    1.667
0.5833    1.667
2.5833    1.343
4.5833    1.020
6.2500    0.750
* code 1203 - profile 5
    7    2    3    4
0.0000    1.458
0.5833    1.458
1.5833    0.458
7.9167    0.458
14.2500   0.458
15.2500   1.458
15.8333   1.458
* code 1203 - profile 6
    5    2    3    4
0.0000    1.167
```

```
0.8334    1.167
4.3204    1.167
7.7714    1.167
9.0005    1.167
* code 1204 - assembling boxgirder
    1    2    1
    2    4    2
    4    6    3
    6    8    2
    8   10    4
    3    5    5
    7    9    5
    2    3    6
    4    5    6
    6    7    6
    8    9    6
* code 1205 control code
    1    2   13    1    1    0    4    2     1.0       1.0
* code 1206 wheels/axle
       0.0
       1.5
       6.0
       7.5 0.833
* code 1207 definition axles
0.0       0.5
4.0       0.5
* code 1208 - accuracy
0.00001   0.00001   0.00001   .00001    .00001
* code 1209 number sections
   45
   1A   1B   1C   1R   2L   2A   2B   2C   2R   3L   3A   3B   3C   3R
   4L   4A   4B   4C   4R   5L   5A   5B   5C
   6A   6B   6C   7A   7B   7C   8L   8A   8B   8C   9L   9A   9B   9C
  10L  10A  10B  10C  11L  11A  11B  11C
* code 1210 - density conrete
0.156
* code 1211 - extra forces selfweight

* code 1212 - surcharge
1.777
* code 1213 - Prestressing Layout - NONE
```

```
* start ; column 11-30 can be used to have your own text on the top of each page
*   5   10   15   20   25   30   35   40   45   50   55   60   65   70   75   80
*   V    V    V    V    V    V    V    V    V    V    V    V    V    V    V    V
00001  1 1     VEH: R1 - TOLL ROAD LOADING No. 1- SINGLE TRUCK
* code 1001
Cline Avenue - Load Rating - Double Box - 4 Webs - 71.105' Wide - Single Vehicle
* code 1002
    2         1
* code 1003
*   5   10   15   20   25   30   35   40   45   50   55   60   65   70   75   80
*   V    V    V    V    V    V    V    V    V    V    V    V    V    V    V    V
250.0     170.0     71.1050   1.0       1.0       1.3
* code 1004
    1    0    2
* code 1005
   90    1
* code 1005a
* location traffic lanes
7.667
* maximum and minimum truck
6.667     64.438    10.000
* code 1007, linear loads
0.7350    0.441
70.37     0.441
* code 1201
   10    6    5    2    4
* code 1202 coordinates
0.0000    0.0
10.7917   0.0
10.7917   -9.0005
26.6250   0.0
26.6250   -9.0005
49.0217   0.0
49.0217   -9.0005
64.8550   0.0
64.8550   -9.0005
71.1050   0.0
* code 1203 - profile 1
    5    2    3    4
0.0000    0.750
5.2083    0.750
7.7083    1.208
10.2083   1.667
10.7917   1.667
* code 1203 - profile 2
    7    2    3    4
0.0000    1.667
0.5833    1.667
5.5833    0.750
7.9167    0.750
10.2500   0.750
15.2500   1.667
15.8333   1.667
* code 1203 - profile 3
    7    2    3    4
0.0000    1.667
0.5833    1.667
5.5833    0.750
11.1983   0.750
16.8133   0.750
21.8133   1.667
22.3967   1.667
* code 1203 - profile 4
    5    2    3    4
0.0000    1.667
0.5833    1.667
2.5833    1.343
4.5833    1.020
6.2500    0.750
* code 1203 - profile 5
    7    2    3    4
0.0000    1.458
0.5833    1.458
1.5833    0.458
7.9167    0.458
14.2500   0.458
15.2500   1.458
15.8333   1.458
* code 1203 - profile 6
    5    2    3    4
0.0000    1.167
```

```
0.8334    1.167
4.3204    1.167
7.7714    1.167
9.0005    1.167
* code 1204 - assembling boxgirder
    1    2    1
    2    4    2
    4    6    3
    6    8    2
    8   10    4
    3    5    5
    7    9    5
    2    3    6
    4    5    6
    6    7    6
    8    9    6
* code 1205 control code
    1    2   13    1    1    0    4    5     1.0       1.0
* code 1206 wheels/axle
       0.0
       1.5
       6.0
       7.5 0.833
* code 1207 definition axles
0.00      18.00
10.00     18.00
14.00     18.00
24.00     18.00
28.00     18.00
* code 1208 - accuracy
0.00001   0.00001   0.00001   .00001    .00001
* code 1209 number sections
   45
   1A   1B   1C   1R   2L   2A   2B   2C   2R   3L   3A   3B   3C   3R
   4L   4A   4B   4C   4R   5L   5A   5B   5C
   6A   6B   6C   7A   7B   7C   8L   8A   8B   8C   9L   9A   9B   9C
  10L  10A  10B  10C  11L  11A  11B  11C
* code 1210 - density conrete
0.156
* code 1211 - extra forces selfweight

* code 1212 - surcharge
1.777
* code 1213 - Prestressing Layout - NONE
•
```

```
* start ; column 11-30 can be used to have your own text on the top of each page
*   5   10   15   20   25   30   35   40   45   50   55   60   65   70   75   80
*   V    V    V    V    V    V    V    V    V    V    V    V    V    V    V    V
00001  1 1     VEH: R2 - TOLL ROAD LOADING No. 2- SINGLE TRUCK
* code 1001
Cline Avenue - Load Rating - Double Box - 4 Webs - 71.105' Wide - Single Vehicle
* code 1002
    2         1
* code 1003
*   5   10   15   20   25   30   35   40   45   50   55   60   65   70   75   80
*   V    V    V    V    V    V    V    V    V    V    V    V    V    V    V    V
250.0     170.0     71.1050   1.0       1.0       1.3
* code 1004
    1    0    2
* code 1005
   90    1
* code 1005a
* location traffic lanes
7.667
* maximum and minimum truck
6.667     64.438    10.000
* code 1007, linear loads
0.7350    0.441
70.37     0.441
* code 1201
   10    6    5    2    4
* code 1202 coordinates
0.0000    0.0
10.7917   0.0
10.7917   -9.0005
26.6250   0.0
26.6250   -9.0005
49.0217   0.0
49.0217   -9.0005
64.8550   0.0
64.8550   -9.0005
71.1050   0.0
* code 1203 - profile 1
    5    2    3    4
0.0000    0.750
5.2083    0.750
7.7083    1.208
10.2083   1.667
10.7917   1.667
* code 1203 - profile 2
    7    2    3    4
0.0000    1.667
0.5833    1.667
5.5833    0.750
7.9167    0.750
10.2500   0.750
15.2500   1.667
15.8333   1.667
* code 1203 - profile 3
    7    2    3    4
0.0000    1.667
0.5833    1.667
5.5833    0.750
11.1983   0.750
16.8133   0.750
21.8133   1.667
22.3967   1.667
* code 1203 - profile 4
    5    2    3    4
0.0000    1.667
0.5833    1.667
2.5833    1.343
4.5833    1.020
6.2500    0.750
* code 1203 - profile 5
    7    2    3    4
0.0000    1.458
0.5833    1.458
1.5833    0.458
7.9167    0.458
14.2500   0.458
15.2500   1.458
15.8333   1.458
* code 1203 - profile 6
    5    2    3    4
0.0000    1.167
```

```
0.8334    1.167
4.3204    1.167
7.7714    1.167
9.0005    1.167
* code 1204 - assembling boxgirder
    1    2    1
    2    4    2
    4    6    3
    6    8    2
    8   10    4
    3    5    5
    7    9    5
    2    3    6
    4    5    6
    6    7    6
    8    9    6
* code 1205 control code
    1    2   13    1    1    0    4    4     1.0       1.0
* code 1206 wheels/axle
       0.0
       1.5
       6.0
       7.5 0.833
* code 1207 definition axles
0.00      22.50
14.00     22.50
23.00     22.50
37.00     22.50
* code 1208 - accuracy
0.00001   0.00001   0.00001   .00001    .00001
* code 1209 number sections
   45
   1A   1B   1C   1R   2L   2A   2B   2C   2R   3L   3A   3B   3C   3R
   4L   4A   4B   4C   4R   5L   5A   5B   5C
   6A   6B   6C   7A   7B   7C   8L   8A   8B   8C   9L   9A   9B   9C
  10L  10A  10B  10C  11L  11A  11B  11C
* code 1210 - density conrete
0.156
* code 1211 - extra forces selfweight

* code 1212 - surcharge
1.777
* code 1213 - Prestressing Layout - NONE
•
```

```
* start ; column 11-30 can be used to have your own text on the top of each page
*   5   10   15   20   25   30   35   40   45   50   55   60   65   70   75   80
*   V    V    V    V    V    V    V    V    V    V    V    V    V    V    V    V
00001  1 1     VEH: R3 - TOLL ROAD LOADING No. 3 - SINGLE TRUCK
* code 1001
Cline Avenue - Load Rating - Double Box - 4 Webs - 71.105' Wide - Single Vehicle
* code 1002
    2         1
* code 1003
*   5   10   15   20   25   30   35   40   45   50   55   60   65   70   75   80
*   V    V    V    V    V    V    V    V    V    V    V    V    V    V    V    V
250.0     170.0     71.1050   1.0       1.0       1.3
* code 1004
    1    0    2
* code 1005
  126    1
* code 1005a
* location traffic lanes
7.667
* maximum and minimum truck
6.667     64.438    10.000
* code 1007, linear loads
0.7350    0.441
70.37     0.441
* code 1201
   10    6    5    2    4
* code 1202 coordinates
0.0000    0.0
10.7917   0.0
10.7917   -9.0005
26.6250   0.0
26.6250   -9.0005
49.0217   0.0
49.0217   -9.0005
64.8550   0.0
64.8550   -9.0005
71.1050   0.0
* code 1203 - profile 1
    5    2    3    4
0.0000    0.750
5.2083    0.750
7.7083    1.208
10.2083   1.667
10.7917   1.667
* code 1203 - profile 2
    7    2    3    4
0.0000    1.667
0.5833    1.667
5.5833    0.750
7.9167    0.750
10.2500   0.750
15.2500   1.667
15.8333   1.667
* code 1203 - profile 3
    7    2    3    4
0.0000    1.667
0.5833    1.667
5.5833    0.750
11.1983   0.750
16.8133   0.750
21.8133   1.667
22.3967   1.667
* code 1203 - profile 4
    5    2    3    4
0.0000    1.667
0.5833    1.667
2.5833    1.343
4.5833    1.020
6.2500    0.750
* code 1203 - profile 5
    7    2    3    4
0.0000    1.458
0.5833    1.458
1.5833    0.458
7.9167    0.458
14.2500   0.458
15.2500   1.458
15.8333   1.458
* code 1203 - profile 6
    5    2    3    4
0.0000    1.167
```

```
0.8334    1.167
4.3204    1.167
7.7714    1.167
9.0005    1.167
* code 1204 - assembling boxgirder
    1    2    1
    2    4    2
    4    6    3
    6    8    2
    8   10    4
    3    5    5
    7    9    5
    2    3    6
    4    5    6
    6    7    6
    8    9    6
* code 1205 control code
    1    2   13    1    1    0    4    7     1.0       1.0
* code 1206 wheels/axle
       0.0
       1.5
       6.0
       7.5 0.833
* code 1207 definition axles
0.00      18.00
10.00     18.00
14.00     18.00
40.00     18.00
44.00     18.00
56.00     18.00
76.00     18.00
* code 1208 - accuracy
0.00001   0.00001   0.00001   .00001    .00001
* code 1209 number sections
   45
   1A   1B   1C   1R   2L   2A   2B   2C   2R   3L   3A   3B   3C   3R
   4L   4A   4B   4C   4R   5L   5A   5B   5C
   6A   6B   6C   7A   7B   7C   8L   8A   8B   8C   9L   9A   9B   9C
  10L  10A  10B  10C  11L  11A  11B  11C
* code 1210 - density conrete
0.156
* code 1211 - extra forces selfweight

* code 1212 - surcharge
1.777
* code 1213 - Prestressing Layout - NONE
•
```

```
* start ; column 11-30 can be used to have your own text on the top of each page
*   5   10   15   20   25   30   35   40   45   50   55   60   65   70   75   80
*   V    V    V    V    V    V    V    V    V    V    V    V    V    V    V    V
00001  1 1     VEH: R4 - MICHIGAN TRUCK TRAIN No.5- SINGLE TRUCK
* code 1001
Cline Avenue - Load Rating - Double Box - 4 Webs - 71.105' Wide - Single Vehicle
* code 1002
    2         1
* code 1003
*   5   10   15   20   25   30   35   40   45   50   55   60   65   70   75   80
*   V    V    V    V    V    V    V    V    V    V    V    V    V    V    V    V
250.0     170.0     71.1050   1.0       1.0       1.3
* code 1004
    1    0    2
* code 1005
  134    1
* code 1005a
* location traffic lanes
7.667
* maximum and minimum truck
6.667     64.438    10.000
* code 1007, linear loads
0.7350    0.441
70.37     0.441
* code 1201
   10    6    5    2    4
* code 1202 coordinates
0.0000    0.0
10.7917   0.0
10.7917   -9.0005
26.6250   0.0
26.6250   -9.0005
49.0217   0.0
49.0217   -9.0005
64.8550   0.0
64.8550   -9.0005
71.1050   0.0
* code 1203 - profile 1
    5    2    3    4
0.0000    0.750
5.2083    0.750
7.7083    1.208
10.2083   1.667
10.7917   1.667
* code 1203 - profile 2
    7    2    3    4
0.0000    1.667
0.5833    1.667
5.5833    0.750
7.9167    0.750
10.2500   0.750
15.2500   1.667
15.8333   1.667
* code 1203 - profile 3
    7    2    3    4
0.0000    1.667
0.5833    1.667
5.5833    0.750
11.1983   0.750
16.8133   0.750
21.8133   1.667
22.3967   1.667
* code 1203 - profile 4
    5    2    3    4
0.0000    1.667
0.5833    1.667
2.5833    1.343
4.5833    1.020
6.2500    0.750
* code 1203 - profile 5
    7    2    3    4
0.0000    1.458
0.5833    1.458
1.5833    0.458
7.9167    0.458
14.2500   0.458
15.2500   1.458
15.8333   1.458
* code 1203 - profile 6
    5    2    3    4
0.0000    1.167
```

```
0.8334    1.167
4.3204    1.167
7.7714    1.167
9.0005    1.167
* code 1204 - assembling boxgirder
    1    2    1
    2    4    2
    4    6    3
    6    8    2
    8   10    4
    3    5    5
    7    9    5
    2    3    6
    4    5    6
    6    7    6
    8    9    6
* code 1205 control code
    1    2   13    1    1    0    4    8     1.0       1.0
* code 1206 wheels/axle
       0.0
       1.5
       6.0
       7.5 0.833
* code 1207 definition axles
0.00      12.00
9.00      16.00
12.50     16.00
21.50     18.00
30.50     18.00
39.50     18.00
48.50     18.00
57.50     18.00
* code 1208 - accuracy
0.00001   0.00001   0.00001   .00001    .00001
* code 1209 number sections
   45
   1A   1B   1C   1R   2L   2A   2B   2C   2R   3L   3A   3B   3C   3R
   4L   4A   4B   4C   4R   5L   5A   5B   5C
   6A   6B   6C   7A   7B   7C   8L   8A   8B   8C   9L   9A   9B   9C
  10L  10A  10B  10C  11L  11A  11B  11C
* code 1210 - density conrete
0.156
* code 1211 - extra forces selfweight

* code 1212 - surcharge
1.777
* code 1213 - Prestressing Layout - NONE
```

```
* start ; column 11-30 can be used to have your own text on the top of each page
*   5   10   15   20   25   30   35   40   45   50   55   60   65   70   75   80
*   V    V    V    V    V    V    V    V    V    V    V    V    V    V    V    V
00001  1 1     VEH: R5 - MICHIGAN TRUCK TRAIN No. 8- SINGLE TRUCK
* code 1001
Cline Avenue - Load Rating - Double Box - 4 Webs - 71.105' Wide - Single Vehicle
* code 1002
    2         1
* code 1003
*   5   10   15   20   25   30   35   40   45   50   55   60   65   70   75   80
*   V    V    V    V    V    V    V    V    V    V    V    V    V    V    V    V
250.0     170.0     71.1050   1.0       1.0       1.3
* code 1004
    1    0    2
* code 1005
* Vehicle weight is 134.2 Kips, rounded to 135
  135    1
* code 1005a
* location traffic lanes
7.667
* maximum and minimum truck
6.667     64.438    10.000
* code 1007, linear loads
0.7350    0.441
70.37     0.441
* code 1201
   10    6    5    2    4
* code 1202 coordinates
0.0000    0.0
10.7917   0.0
10.7917   -9.0005
26.6250   0.0
26.6250   -9.0005
49.0217   0.0
49.0217   -9.0005
64.8550   0.0
64.8550   -9.0005
71.1050   0.0
* code 1203 - profile 1
    5    2    3    4
0.0000    0.750
5.2083    0.750
7.7083    1.208
10.2083   1.667
10.7917   1.667
* code 1203 - profile 2
    7    2    3    4
0.0000    1.667
0.5833    1.667
5.5833    0.750
7.9167    0.750
10.2500   0.750
15.2500   1.667
15.8333   1.667
* code 1203 - profile 3
    7    2    3    4
0.0000    1.667
0.5833    1.667
5.5833    0.750
11.1983   0.750
16.8133   0.750
21.8133   1.667
22.3967   1.667
* code 1203 - profile 4
    5    2    3    4
0.0000    1.667
0.5833    1.667
2.5833    1.343
4.5833    1.020
6.2500    0.750
* code 1203 - profile 5
    7    2    3    4
0.0000    1.458
0.5833    1.458
1.5833    0.458
7.9167    0.458
14.2500   0.458
15.2500   1.458
15.8333   1.458
* code 1203 - profile 6
    5    2    3    4
```

1_III_B_R5_EL.txt 9/11/2009

```
0.0000    1.167
0.8334    1.167
4.3204    1.167
7.7714    1.167
9.0005    1.167
* code 1204 - assembling boxgirder
    1    2    1
    2    4    2
    4    6    3
    6    8    2
    8   10    4
    3    5    5
    7    9    5
    2    3    6
    4    5    6
    6    7    6
    8    9    6
* code 1205 control code
    1    2   13    1    1    0    4   11     1.0       1.0
* code 1206 wheels/axle
       0.0
       1.5
       6.0
       7.5 0.833
* code 1207 definition axles
0.00      12.00
9.00      13.40
12.50     13.40
21.50     10.90
25.00     10.90
28.50     10.90
32.00     10.90
35.50     10.90
39.00     10.90
48.00     15.00
57.00     15.00
* code 1208 - accuracy
0.00001   0.00001   0.00001   .00001    .00001
* code 1209 number sections
   45
   1A   1B   1C   1R   2L   2A   2B   2C   2R   3L   3A   3B   3C   3R
   4L   4A   4B   4C   4R   5L   5A   5B   5C
   6A   6B   6C   7A   7B   7C   8L   8A   8B   8C   9L   9A   9B   9C
  10L  10A  10B  10C  11L  11A  11B  11C
* code 1210 - density conrete
0.156
* code 1211 - extra forces selfweight

* code 1212 - surcharge
1.777
* code 1213 - Prestressing Layout - NONE
```

```
* start ; column 11-30 can be used to have your own text on the top of each page
*   5   10   15   20   25   30   35   40   45   50   55   60   65   70   75   80
*   V    V    V    V    V    V    V    V    V    V    V    V    V    V    V    V
00001  1 1     VEH: S1 - SPECIAL TRUCK 11 AXLE- SINGLE TRUCK
* code 1001
Cline Avenue - Load Rating - Double Box - 4 Webs - 71.105' Wide - Single Vehicle
* code 1002
    2         1
* code 1003
*   5   10   15   20   25   30   35   40   45   50   55   60   65   70   75   80
*   V    V    V    V    V    V    V    V    V    V    V    V    V    V    V    V
250.0     170.0     71.1050   1.0       1.0       1.3
* code 1004
    1    0    2
* code 1005
  258    1
* code 1005a
* location traffic lanes
7.667
* maximum and minimum truck
6.667     64.438    10.000
* code 1007, linear loads
0.7350    0.441
70.37     0.441
* code 1201
   10    6    5    2    4
* code 1202 coordinates
0.0000    0.0
10.7917   0.0
10.7917   -9.0005
26.6250   0.0
26.6250   -9.0005
49.0217   0.0
49.0217   -9.0005
64.8550   0.0
64.8550   -9.0005
71.1050   0.0
* code 1203 - profile 1
    5    2    3    4
0.0000    0.750
5.2083    0.750
7.7083    1.208
10.2083   1.667
10.7917   1.667
* code 1203 - profile 2
    7    2    3    4
0.0000    1.667
0.5833    1.667
5.5833    0.750
7.9167    0.750
10.2500   0.750
15.2500   1.667
15.8333   1.667
* code 1203 - profile 3
    7    2    3    4
0.0000    1.667
0.5833    1.667
5.5833    0.750
11.1983   0.750
16.8133   0.750
21.8133   1.667
22.3967   1.667
* code 1203 - profile 4
    5    2    3    4
0.0000    1.667
0.5833    1.667
2.5833    1.343
4.5833    1.020
6.2500    0.750
* code 1203 - profile 5
    7    2    3    4
0.0000    1.458
0.5833    1.458
1.5833    0.458
7.9167    0.458
14.2500   0.458
15.2500   1.458
15.8333   1.458
* code 1203 - profile 6
    5    2    3    4
0.0000    1.167
```

```
0.8334    1.167
4.3204    1.167
7.7714    1.167
9.0005    1.167
* code 1204 - assembling boxgirder
    1    2    1
    2    4    2
    4    6    3
    6    8    2
    8   10    4
    3    5    5
    7    9    5
    2    3    6
    4    5    6
    6    7    6
    8    9    6
* code 1205 control code
    1    2   13    1    1    0    4   11     1.0       1.0
* code 1206 wheels/axle
       0.0
       1.5
       6.0
       7.5 0.833
* code 1207 definition axles
0.00      12.00
11.50     24.60
16.67     24.60
21.67     24.60
34.83     24.60
39.33     24.60
89.92     24.60
94.42     24.60
98.92     24.60
112.50     24.60
117.00     24.60
* code 1208 - accuracy
0.00001   0.00001   0.00001   .00001    .00001
* code 1209 number sections
   45
   1A   1B   1C   1R   2L   2A   2B   2C   2R   3L   3A   3B   3C   3R
   4L   4A   4B   4C   4R   5L   5A   5B   5C
   6A   6B   6C   7A   7B   7C   8L   8A   8B   8C   9L   9A   9B   9C
  10L  10A  10B  10C  11L  11A  11B  11C
* code 1210 - density conrete
0.156
* code 1211 - extra forces selfweight

* code 1212 - surcharge
1.777
* code 1213 - Prestressing Layout - NONE
•
```

```
* start ; column 11-30 can be used to have your own text on the top of each page
*   5   10   15   20   25   30   35   40   45   50   55   60   65   70   75   80
*   V    V    V    V    V    V    V    V    V    V    V    V    V    V    V    V
00001  1 1     VEH: S2 - SPECIAL TRUCK - 13 AXLE- SINGLE TRUCK
* code 1001
Cline Avenue - Load Rating - Double Box - 4 Webs - 71.105' Wide - Single Vehicle
* code 1002
    2         1
* code 1003
*   5   10   15   20   25   30   35   40   45   50   55   60   65   70   75   80
*   V    V    V    V    V    V    V    V    V    V    V    V    V    V    V    V
250.0     170.0     71.1050   1.0       1.0       1.3
* code 1004
    1    0    2
* code 1005
  267    1
* code 1005a
* location traffic lanes
7.667
* maximum and minimum truck
6.667     64.438    10.000
* code 1007, linear loads
0.7350    0.441
70.37     0.441
* code 1201
   10    6    5    2    4
* code 1202 coordinates
0.0000    0.0
10.7917   0.0
10.7917   -9.0005
26.6250   0.0
26.6250   -9.0005
49.0217   0.0
49.0217   -9.0005
64.8550   0.0
64.8550   -9.0005
71.1050   0.0
* code 1203 - profile 1
    5    2    3    4
0.0000    0.750
5.2083    0.750
7.7083    1.208
10.2083   1.667
10.7917   1.667
* code 1203 - profile 2
    7    2    3    4
0.0000    1.667
0.5833    1.667
5.5833    0.750
7.9167    0.750
10.2500   0.750
15.2500   1.667
15.8333   1.667
* code 1203 - profile 3
    7    2    3    4
0.0000    1.667
0.5833    1.667
5.5833    0.750
11.1983   0.750
16.8133   0.750
21.8133   1.667
22.3967   1.667
* code 1203 - profile 4
    5    2    3    4
0.0000    1.667
0.5833    1.667
2.5833    1.343
4.5833    1.020
6.2500    0.750
* code 1203 - profile 5
    7    2    3    4
0.0000    1.458
0.5833    1.458
1.5833    0.458
7.9167    0.458
14.2500   0.458
15.2500   1.458
15.8333   1.458
* code 1203 - profile 6
    5    2    3    4
0.0000    1.167
```

```
0.8334    1.167
4.3204    1.167
7.7714    1.167
9.0005    1.167
* code 1204 - assembling boxgirder
    1    2    1
    2    4    2
    4    6    3
    6    8    2
    8   10    4
    3    5    5
    7    9    5
    2    3    6
    4    5    6
    6    7    6
    8    9    6
* code 1205 control code
    1    2   13    1    1    0    4   13     1.0       1.0
* code 1206 wheels/axle
       0.0
       1.5
       6.0
       7.5 0.833
* code 1207 definition axles
0.00      15.00
16.50     21.00
21.00     21.00
25.50     21.00
39.50     21.00
44.00     21.00
48.50     21.00
96.50     21.00
101.00    21.00
105.50    21.00
121.00    21.00
125.50    21.00
130.00    21.00
* code 1208 - accuracy
0.00001   0.00001   0.00001   .00001    .00001
* code 1209 number sections
   45
   1A   1B   1C   1R   2L   2A   2B   2C   2R   3L   3A   3B   3C   3R
   4L   4A   4B   4C   4R   5L   5A   5B   5C
   6A   6B   6C   7A   7B   7C   8L   8A   8B   8C   9L   9A   9B   9C
  10L  10A  10B  10C  11L  11A  11B  11C
* code 1210 - density conrete
0.156
* code 1211 - extra forces selfweight

* code 1212 - surcharge
1.777
* code 1213 - Prestressing Layout - NONE
```

```
* start ; column 11-30 can be used to have your own text on the top of each page
*   5   10   15   20   25   30   35   40   45   50   55   60   65   70   75   80
*   V    V    V    V    V    V    V    V    V    V    V    V    V    V    V    V
00001  1 1     VEH: S3 - SPECIAL TRUCK - 14 AXLE- SINGLE TRUCK
* code 1001
Cline Avenue - Load Rating - Double Box - 4 Webs - 71.105' Wide - Single Vehicle
* code 1002
    2         1
* code 1003
*   5   10   15   20   25   30   35   40   45   50   55   60   65   70   75   80
*   V    V    V    V    V    V    V    V    V    V    V    V    V    V    V    V
250.0     170.0     71.1050   1.0       1.0       1.3
* code 1004
    1    0    2
* code 1005
  350    1
* code 1005a
* location traffic lanes
7.667
* maximum and minimum truck
6.667     64.438    10.000
* code 1007, linear loads
0.7350    0.441
70.37     0.441
* code 1201
   10    6    5    2    4
* code 1202 coordinates
0.0000    0.0
10.7917   0.0
10.7917   -9.0005
26.6250   0.0
26.6250   -9.0005
49.0217   0.0
49.0217   -9.0005
64.8550   0.0
64.8550   -9.0005
71.1050   0.0
* code 1203 - profile 1
    5    2    3    4
0.0000    0.750
5.2083    0.750
7.7083    1.208
10.2083   1.667
10.7917   1.667
* code 1203 - profile 2
    7    2    3    4
0.0000    1.667
0.5833    1.667
5.5833    0.750
7.9167    0.750
10.2500   0.750
15.2500   1.667
15.8333   1.667
* code 1203 - profile 3
    7    2    3    4
0.0000    1.667
0.5833    1.667
5.5833    0.750
11.1983   0.750
16.8133   0.750
21.8133   1.667
22.3967   1.667
* code 1203 - profile 4
    5    2    3    4
0.0000    1.667
0.5833    1.667
2.5833    1.343
4.5833    1.020
6.2500    0.750
* code 1203 - profile 5
    7    2    3    4
0.0000    1.458
0.5833    1.458
1.5833    0.458
7.9167    0.458
14.2500   0.458
15.2500   1.458
15.8333   1.458
* code 1203 - profile 6
    5    2    3    4
0.0000    1.167
```

```
0.8334    1.167
4.3204    1.167
7.7714    1.167
9.0005    1.167
* code 1204 - assembling boxgirder
    1    2    1
    2    4    2
    4    6    3
    6    8    2
    8   10    4
    3    5    5
    7    9    5
    2    3    6
    4    5    6
    6    7    6
    8    9    6
* code 1205 control code
    1    2   13    1    1    0    4   14     1.0       1.0
* code 1206 wheels/axle
       0.0
       1.5
       6.0
       7.5 0.833
* code 1207 definition axles
0.00      13.00
14.50     25.00
19.00     25.00
23.50     25.00
50.50     23.50
54.67     23.50
58.83     23.50
102.83    23.50
107.33    28.00
111.83    28.00
116.33    28.00
132.17    28.00
136.67    28.00
141.17    28.00
* code 1208 - accuracy
0.00001   0.00001   0.00001   .00001    .00001
* code 1209 number sections
   45
   1A   1B   1C   1R   2L   2A   2B   2C   2R   3L   3A   3B   3C   3R
   4L   4A   4B   4C   4R   5L   5A   5B   5C
   6A   6B   6C   7A   7B   7C   8L   8A   8B   8C   9L   9A   9B   9C
  10L  10A  10B  10C  11L  11A  11B  11C
* code 1210 - density conrete
0.156
* code 1211 - extra forces selfweight

* code 1212 - surcharge
1.777
* code 1213 - Prestressing Layout - NONE
```

```
* start ; column 11-30 can be used to have your own text on the top of each page
*   5   10   15   20   25   30   35   40   45   50   55   60   65   70   75   80
*   V    V    V    V    V    V    V    V    V    V    V    V    V    V    V    V
00001  1 1     VEH: S4 - SUPER LOAD -19 AXLES- SINGLE TRUCK
* code 1001
Cline Avenue - Load Rating - Double Box - 4 Webs - 71.105' Wide - Single Vehicle
* code 1002
    2         1
* code 1003
*   5   10   15   20   25   30   35   40   45   50   55   60   65   70   75   80
*   V    V    V    V    V    V    V    V    V    V    V    V    V    V    V    V
250.0     170.0     71.1050   1.0       1.0       1.3
* code 1004
    1    0    2
* code 1005
  305    1
* code 1005a
* location traffic lanes
7.667
* maximum and minimum truck
6.667     64.438    10.000
* code 1007, linear loads
0.7350    0.441
70.37     0.441
* code 1201
   10    6    5    2    4
* code 1202 coordinates
0.0000    0.0
10.7917   0.0
10.7917   -9.0005
26.6250   0.0
26.6250   -9.0005
49.0217   0.0
49.0217   -9.0005
64.8550   0.0
64.8550   -9.0005
71.1050   0.0
* code 1203 - profile 1
    5    2    3    4
0.0000    0.750
5.2083    0.750
7.7083    1.208
10.2083   1.667
10.7917   1.667
* code 1203 - profile 2
    7    2    3    4
0.0000    1.667
0.5833    1.667
5.5833    0.750
7.9167    0.750
10.2500   0.750
15.2500   1.667
15.8333   1.667
* code 1203 - profile 3
    7    2    3    4
0.0000    1.667
0.5833    1.667
5.5833    0.750
11.1983   0.750
16.8133   0.750
21.8133   1.667
22.3967   1.667
* code 1203 - profile 4
    5    2    3    4
0.0000    1.667
0.5833    1.667
2.5833    1.343
4.5833    1.020
6.2500    0.750
* code 1203 - profile 5
    7    2    3    4
0.0000    1.458
0.5833    1.458
1.5833    0.458
7.9167    0.458
14.2500   0.458
15.2500   1.458
15.8333   1.458
* code 1203 - profile 6
    5    2    3    4
0.0000    1.167
```

```
0.8334    1.167
4.3204    1.167
7.7714    1.167
9.0005    1.167
* code 1204 - assembling boxgirder
    1    2    1
    2    4    2
    4    6    3
    6    8    2
    8   10    4
    3    5    5
    7    9    5
    2    3    6
    4    5    6
    6    7    6
    8    9    6
* code 1205 control code
    1    2   13    1    1    0    4   19     1.0       1.0
* code 1206 wheels/axle
       0.0
       1.5
       6.0
       7.5 0.833
* code 1207 definition axles
0.00      13.00
13.50     16.48
17.83     16.48
31.33     16.48
35.42     15.99
39.50     15.99
45.50     15.99
49.58     16.37
53.67     16.37
103.58    16.37
107.67    16.64
114.17    16.64
118.25    15.15
122.33    15.15
126.42    15.15
135.92    15.15
140.00    17.20
144.08    17.20
148.17    17.20
* code 1208 - accuracy
0.00001   0.00001   0.00001   .00001    .00001
* code 1209 number sections
   45
   1A   1B   1C   1R   2L   2A   2B   2C   2R   3L   3A   3B   3C   3R
   4L   4A   4B   4C   4R   5L   5A   5B   5C
   6A   6B   6C   7A   7B   7C   8L   8A   8B   8C   9L   9A   9B   9C
  10L  10A  10B  10C  11L  11A  11B  11C
* code 1210 - density conrete
0.156
* code 1211 - extra forces selfweight

* code 1212 - surcharge
1.777
* code 1213 - Prestressing Layout - NONE
•
```

```
* start ; column 11-30 can be used to have your own text on the top of each page
*   5   10   15   20   25   30   35   40   45   50   55   60   65   70   75   80
*   V    V    V    V    V    V    V    V    V    V    V    V    V    V    V    V
00001  1 1     VEH: S5 - SUPERLOAD - 19 AXLE- SINGLE TRUCK
* code 1001
Cline Avenue - Load Rating - Double Box - 4 Webs - 71.105' Wide - Single Vehicle
* code 1002
    2         1
* code 1003
*   5   10   15   20   25   30   35   40   45   50   55   60   65   70   75   80
*   V    V    V    V    V    V    V    V    V    V    V    V    V    V    V    V
250.0     170.0     71.1050   1.0       1.0       1.3
* code 1004
    1    0    2
* code 1005
  480    1
* code 1005a
* location traffic lanes
7.667
* maximum and minimum truck
6.667     64.438    10.000
* code 1007, linear loads
0.7350    0.441
70.37     0.441
* code 1201
   10    6    5    2    4
* code 1202 coordinates
0.0000    0.0
10.7917   0.0
10.7917   -9.0005
26.6250   0.0
26.6250   -9.0005
49.0217   0.0
49.0217   -9.0005
64.8550   0.0
64.8550   -9.0005
71.1050   0.0
* code 1203 - profile 1
    5    2    3    4
0.0000    0.750
5.2083    0.750
7.7083    1.208
10.2083   1.667
10.7917   1.667
* code 1203 - profile 2
    7    2    3    4
0.0000    1.667
0.5833    1.667
5.5833    0.750
7.9167    0.750
10.2500   0.750
15.2500   1.667
15.8333   1.667
* code 1203 - profile 3
    7    2    3    4
0.0000    1.667
0.5833    1.667
5.5833    0.750
11.1983   0.750
16.8133   0.750
21.8133   1.667
22.3967   1.667
* code 1203 - profile 4
    5    2    3    4
0.0000    1.667
0.5833    1.667
2.5833    1.343
4.5833    1.020
6.2500    0.750
* code 1203 - profile 5
    7    2    3    4
0.0000    1.458
0.5833    1.458
1.5833    0.458
7.9167    0.458
14.2500   0.458
15.2500   1.458
15.8333   1.458
* code 1203 - profile 6
    5    2    3    4
0.0000    1.167
```

```
0.8334    1.167
4.3204    1.167
7.7714    1.167
9.0005    1.167
* code 1204 - assembling boxgirder
    1    2    1
    2    4    2
    4    6    3
    6    8    2
    8   10    4
    3    5    5
    7    9    5
    2    3    6
    4    5    6
    6    7    6
    8    9    6
* code 1205 control code
    1    2   13    1    1    0    4   19     1.0       1.0
* code 1206 wheels/axle
       0.0
       1.5
       6.0
       7.5 0.833
* code 1207 definition axles
0.00      12.88
12.50     25.95
17.50     25.95
31.58     25.95
36.58     25.95
41.58     25.95
55.67     25.95
60.67     25.95
65.67     25.95
115.67    25.95
120.67    25.95
125.67    25.95
139.75    25.95
144.75    25.95
149.75    25.95
163.83    25.95
168.83    25.95
173.83    25.95
178.83    25.95
* code 1208 - accuracy
0.00001   0.00001   0.00001   .00001    .00001
* code 1209 number sections
   45
   1A   1B   1C   1R   2L   2A   2B   2C   2R   3L   3A   3B   3C   3R
   4L   4A   4B   4C   4R   5L   5A   5B   5C
   6A   6B   6C   7A   7B   7C   8L   8A   8B   8C   9L   9A   9B   9C
  10L  10A  10B  10C  11L  11A  11B  11C
* code 1210 - density conrete
0.156
* code 1211 - extra forces selfweight

* code 1212 - surcharge
1.777
* code 1213 - Prestressing Layout - NONE
•
```

```
* start ; column 11-30 can be used to have your own text on the top of each page
00001    0    0
* code 1001
Cline Avenue - Load Rating - Double Box - 4 Webs - 71.105' Wide - Single Vehicle
* code 1002
    2         1
* code 1003
*   5   10   15   20   25   30   35   40   45   50   55   60   65   70   75   80
*   V    V    V    V    V    V    V    V    V    V    V    V    V    V    V    V
250.0     170.0     71.1050   1.0       1.0       1.3
* code 1004
    2    0    2
* code 1005
   72
* code 1005a
* location traffic lanes
7.667     19.667
* maximum and minimum truck
6.667     64.438    10.000
* code 1007, linear loads
0.7350    0.441
70.37     0.441
* code 1201
   10    6    5    2    4
* code 1202 coordinates
0.0000    0.0
10.7917   0.0
10.7917   -9.0005
26.6250   0.0
26.6250   -9.0005
49.0217   0.0
49.0217   -9.0005
64.8550   0.0
64.8550   -9.0005
71.1050   0.0
* code 1203 - profile 1
    5    2    3    4
0.0000    0.750
5.2083    0.750
7.7083    1.208
10.2083   1.667
10.7917   1.667
* code 1203 - profile 2
    7    2    3    4
0.0000    1.667
0.5833    1.667
5.5833    0.750
7.9167    0.750
10.2500   0.750
15.2500   1.667
15.8333   1.667
* code 1203 - profile 3
    7    2    3    4
0.0000    1.667
0.5833    1.667
5.5833    0.750
11.1983   0.750
16.8133   0.750
21.8133   1.667
22.3967   1.667
* code 1203 - profile 4
    5    2    3    4
0.0000    1.667
0.5833    1.667
2.5833    1.343
4.5833    1.020
6.2500    0.750
* code 1203 - profile 5
    7    2    3    4
0.0000    1.458
0.5833    1.458
1.5833    0.458
7.9167    0.458
14.2500   0.458
15.2500   1.458
15.8333   1.458
* code 1203 - profile 6
    5    2    3    4
0.0000    1.167
0.8334    1.167
4.3204    1.167
```

```
7.7714    1.167
9.0005    1.167
* code 1204 - assembling boxgirder
    1    2    1
    2    4    2
    4    6    3
    6    8    2
    8   10    4
    3    5    5
    7    9    5
    2    3    6
    4    5    6
    6    7    6
    8    9    6
* code 1205 control code
    1    2   13    1    1    0    4    3     1.0       1.0
* code 1206 wheels/axle
       0.0
       1.5
       6.0
       7.5 0.833
* code 1207 definition axles
0.0       0.1
14.0      0.4
28.0      0.4
* code 1208 - accuracy
0.00001   0.00001   0.00001   .00001    .00001
* code 1209 number sections
   45
   1A   1B   1C   1R   2L   2A   2B   2C   2R   3L   3A   3B   3C   3R
   4L   4A   4B   4C   4R   5L   5A   5B   5C
   6A   6B   6C   7A   7B   7C   8L   8A   8B   8C   9L   9A   9B   9C
  10L  10A  10B  10C  11L  11A  11B  11C
* code 1210 - density conrete
0.156
* code 1211 - extra forces selfweight

* code 1212 - surcharge
1.777
* code 1213 - Prestressing Layout - NONE
•
```

```
* start ; column 11-30 can be used to have your own text on the top of each page
*   5   10   15   20   25   30   35   40   45   50   55   60   65   70   75   80
*   V    V    V    V    V    V    V    V    V    V    V    V    V    V    V    V
00001  1 1     VEH: HL93- TANDEM
* code 1001
Cline Avenue - Load Rating - Double Box - 4 Webs - 71.105' Wide - Single Vehicle
* code 1002
    2         1
* code 1003
*   5   10   15   20   25   30   35   40   45   50   55   60   65   70   75   80
*   V    V    V    V    V    V    V    V    V    V    V    V    V    V    V    V
250.0     170.0     71.1050   1.0       1.0       1.3
* code 1004
    2    0    2
* code 1005
   50
* code 1005a
* location traffic lanes
7.667     19.667
* maximum and minimum truck
6.667     64.438    10.000
* code 1007, linear loads
0.7350    0.441
70.37     0.441
* code 1201
   10    6    5    2    4
* code 1202 coordinates
0.0000    0.0
10.7917   0.0
10.7917   -9.0005
26.6250   0.0
26.6250   -9.0005
49.0217   0.0
49.0217   -9.0005
64.8550   0.0
64.8550   -9.0005
71.1050   0.0
* code 1203 - profile 1
    5    2    3    4
0.0000    0.750
5.2083    0.750
7.7083    1.208
10.2083   1.667
10.7917   1.667
* code 1203 - profile 2
    7    2    3    4
0.0000    1.667
0.5833    1.667
5.5833    0.750
7.9167    0.750
10.2500   0.750
15.2500   1.667
15.8333   1.667
* code 1203 - profile 3
    7    2    3    4
0.0000    1.667
0.5833    1.667
5.5833    0.750
11.1983   0.750
16.8133   0.750
21.8133   1.667
22.3967   1.667
* code 1203 - profile 4
    5    2    3    4
0.0000    1.667
0.5833    1.667
2.5833    1.343
4.5833    1.020
6.2500    0.750
* code 1203 - profile 5
    7    2    3    4
0.0000    1.458
0.5833    1.458
1.5833    0.458
7.9167    0.458
14.2500   0.458
15.2500   1.458
15.8333   1.458
* code 1203 - profile 6
    5    2    3    4
0.0000    1.167
```

```
0.8334    1.167
4.3204    1.167
7.7714    1.167
9.0005    1.167
* code 1204 - assembling boxgirder
    1    2    1
    2    4    2
    4    6    3
    6    8    2
    8   10    4
    3    5    5
    7    9    5
    2    3    6
    4    5    6
    6    7    6
    8    9    6
* code 1205 control code
    1    2   13    1    1    0    4    2     1.0       1.0
* code 1206 wheels/axle
       0.0
       1.5
       6.0
       7.5 0.833
* code 1207 definition axles
0.0       0.5
4.0       0.5
* code 1208 - accuracy
0.00001   0.00001   0.00001   .00001    .00001
* code 1209 number sections
   45
   1A   1B   1C   1R   2L   2A   2B   2C   2R   3L   3A   3B   3C   3R
   4L   4A   4B   4C   4R   5L   5A   5B   5C
   6A   6B   6C   7A   7B   7C   8L   8A   8B   8C   9L   9A   9B   9C
  10L  10A  10B  10C  11L  11A  11B  11C
* code 1210 - density conrete
0.156
* code 1211 - extra forces selfweight

* code 1212 - surcharge
1.777
* code 1213 - Prestressing Layout - NONE
```

```
* start ; column 11-30 can be used to have your own text on the top of each page
*   5   10   15   20   25   30   35   40   45   50   55   60   65   70   75   80
*   V    V    V    V    V    V    V    V    V    V    V    V    V    V    V    V
00001  1 1     VEH: R1 - TOLL ROAD LOADING No. 1
* code 1001
Cline Avenue - Load Rating - Double Box - 4 Webs - 71.105' Wide - Single Vehicle
* code 1002
    2         1
* code 1003
*   5   10   15   20   25   30   35   40   45   50   55   60   65   70   75   80
*   V    V    V    V    V    V    V    V    V    V    V    V    V    V    V    V
250.0     170.0     71.1050   1.0       1.0       1.3
* code 1004
    2    0    2
* code 1005
   90
* code 1005a
* location traffic lanes
7.667     19.667
* maximum and minimum truck
6.667     64.438    10.000
* code 1007, linear loads
0.7350    0.441
70.37     0.441
* code 1201
   10    6    5    2    4
* code 1202 coordinates
0.0000    0.0
10.7917   0.0
10.7917   -9.0005
26.6250   0.0
26.6250   -9.0005
49.0217   0.0
49.0217   -9.0005
64.8550   0.0
64.8550   -9.0005
71.1050   0.0
* code 1203 - profile 1
    5    2    3    4
0.0000    0.750
5.2083    0.750
7.7083    1.208
10.2083   1.667
10.7917   1.667
* code 1203 - profile 2
    7    2    3    4
0.0000    1.667
0.5833    1.667
5.5833    0.750
7.9167    0.750
10.2500   0.750
15.2500   1.667
15.8333   1.667
* code 1203 - profile 3
    7    2    3    4
0.0000    1.667
0.5833    1.667
5.5833    0.750
11.1983   0.750
16.8133   0.750
21.8133   1.667
22.3967   1.667
* code 1203 - profile 4
    5    2    3    4
0.0000    1.667
0.5833    1.667
2.5833    1.343
4.5833    1.020
6.2500    0.750
* code 1203 - profile 5
    7    2    3    4
0.0000    1.458
0.5833    1.458
1.5833    0.458
7.9167    0.458
14.2500   0.458
15.2500   1.458
15.8333   1.458
* code 1203 - profile 6
    5    2    3    4
0.0000    1.167
```

```
0.8334    1.167
4.3204    1.167
7.7714    1.167
9.0005    1.167
* code 1204 - assembling boxgirder
    1    2    1
    2    4    2
    4    6    3
    6    8    2
    8   10    4
    3    5    5
    7    9    5
    2    3    6
    4    5    6
    6    7    6
    8    9    6
* code 1205 control code
    1    2   13    1    1    0    4    5     1.0       1.0
* code 1206 wheels/axle
       0.0
       1.5
       6.0
       7.5 0.833
* code 1207 definition axles
0.00      18.00
10.00     18.00
14.00     18.00
24.00     18.00
28.00     18.00
* code 1208 - accuracy
0.00001   0.00001   0.00001   .00001    .00001
* code 1209 number sections
   45
   1A   1B   1C   1R   2L   2A   2B   2C   2R   3L   3A   3B   3C   3R
   4L   4A   4B   4C   4R   5L   5A   5B   5C
   6A   6B   6C   7A   7B   7C   8L   8A   8B   8C   9L   9A   9B   9C
  10L  10A  10B  10C  11L  11A  11B  11C
* code 1210 - density conrete
0.156
* code 1211 - extra forces selfweight

* code 1212 - surcharge
1.777
* code 1213 - Prestressing Layout - NONE
•
```

```
* start ; column 11-30 can be used to have your own text on the top of each page
*   5   10   15   20   25   30   35   40   45   50   55   60   65   70   75   80
*   V    V    V    V    V    V    V    V    V    V    V    V    V    V    V    V
00001  1 1     VEH: R2 - TOLL ROAD LOADING No. 2
* code 1001
Cline Avenue - Load Rating - Double Box - 4 Webs - 71.105' Wide - Single Vehicle
* code 1002
    2         1
* code 1003
*   5   10   15   20   25   30   35   40   45   50   55   60   65   70   75   80
*   V    V    V    V    V    V    V    V    V    V    V    V    V    V    V    V
250.0     170.0     71.1050   1.0       1.0       1.3
* code 1004
    2    0    2
* code 1005
   90
* code 1005a
* location traffic lanes
7.667     19.667
* maximum and minimum truck
6.667     64.438    10.000
* code 1007, linear loads
0.7350    0.441
70.37     0.441
* code 1201
   10    6    5    2    4
* code 1202 coordinates
0.0000    0.0
10.7917   0.0
10.7917   -9.0005
26.6250   0.0
26.6250   -9.0005
49.0217   0.0
49.0217   -9.0005
64.8550   0.0
64.8550   -9.0005
71.1050   0.0
* code 1203 - profile 1
    5    2    3    4
0.0000    0.750
5.2083    0.750
7.7083    1.208
10.2083   1.667
10.7917   1.667
* code 1203 - profile 2
    7    2    3    4
0.0000    1.667
0.5833    1.667
5.5833    0.750
7.9167    0.750
10.2500   0.750
15.2500   1.667
15.8333   1.667
* code 1203 - profile 3
    7    2    3    4
0.0000    1.667
0.5833    1.667
5.5833    0.750
11.1983   0.750
16.8133   0.750
21.8133   1.667
22.3967   1.667
* code 1203 - profile 4
    5    2    3    4
0.0000    1.667
0.5833    1.667
2.5833    1.343
4.5833    1.020
6.2500    0.750
* code 1203 - profile 5
    7    2    3    4
0.0000    1.458
0.5833    1.458
1.5833    0.458
7.9167    0.458
14.2500   0.458
15.2500   1.458
15.8333   1.458
* code 1203 - profile 6
    5    2    3    4
0.0000    1.167
```

```
0.8334    1.167
4.3204    1.167
7.7714    1.167
9.0005    1.167
* code 1204 - assembling boxgirder
    1    2    1
    2    4    2
    4    6    3
    6    8    2
    8   10    4
    3    5    5
    7    9    5
    2    3    6
    4    5    6
    6    7    6
    8    9    6
* code 1205 control code
    1    2   13    1    1    0    4    4     1.0       1.0
* code 1206 wheels/axle
       0.0
       1.5
       6.0
       7.5 0.833
* code 1207 definition axles
0.00      22.50
14.00     22.50
23.00     22.50
37.00     22.50
* code 1208 - accuracy
0.00001   0.00001   0.00001   .00001    .00001
* code 1209 number sections
   45
   1A   1B   1C   1R   2L   2A   2B   2C   2R   3L   3A   3B   3C   3R
   4L   4A   4B   4C   4R   5L   5A   5B   5C
   6A   6B   6C   7A   7B   7C   8L   8A   8B   8C   9L   9A   9B   9C
  10L  10A  10B  10C  11L  11A  11B  11C
* code 1210 - density conrete
0.156
* code 1211 - extra forces selfweight

* code 1212 - surcharge
1.777
* code 1213 - Prestressing Layout - NONE
•
```

```
* start ; column 11-30 can be used to have your own text on the top of each page
*   5   10   15   20   25   30   35   40   45   50   55   60   65   70   75   80
*   V    V    V    V    V    V    V    V    V    V    V    V    V    V    V    V
00001  1 1     VEH: R3 - TOLL ROAD LOADING No. 3
* code 1001
Cline Avenue - Load Rating - Double Box - 4 Webs - 71.105' Wide - Single Vehicle
* code 1002
    2         1
* code 1003
*   5   10   15   20   25   30   35   40   45   50   55   60   65   70   75   80
*   V    V    V    V    V    V    V    V    V    V    V    V    V    V    V    V
250.0     170.0     71.1050   1.0       1.0       1.3
* code 1004
    2    0    2
* code 1005
  126
* code 1005a
* location traffic lanes
7.667     19.667
* maximum and minimum truck
6.667     64.438    10.000
* code 1007, linear loads
0.7350    0.441
70.37     0.441
* code 1201
   10    6    5    2    4
* code 1202 coordinates
0.0000    0.0
10.7917   0.0
10.7917   -9.0005
26.6250   0.0
26.6250   -9.0005
49.0217   0.0
49.0217   -9.0005
64.8550   0.0
64.8550   -9.0005
71.1050   0.0
* code 1203 - profile 1
    5    2    3    4
0.0000    0.750
5.2083    0.750
7.7083    1.208
10.2083   1.667
10.7917   1.667
* code 1203 - profile 2
    7    2    3    4
0.0000    1.667
0.5833    1.667
5.5833    0.750
7.9167    0.750
10.2500   0.750
15.2500   1.667
15.8333   1.667
* code 1203 - profile 3
    7    2    3    4
0.0000    1.667
0.5833    1.667
5.5833    0.750
11.1983   0.750
16.8133   0.750
21.8133   1.667
22.3967   1.667
* code 1203 - profile 4
    5    2    3    4
0.0000    1.667
0.5833    1.667
2.5833    1.343
4.5833    1.020
6.2500    0.750
* code 1203 - profile 5
    7    2    3    4
0.0000    1.458
0.5833    1.458
1.5833    0.458
7.9167    0.458
14.2500   0.458
15.2500   1.458
15.8333   1.458
* code 1203 - profile 6
    5    2    3    4
0.0000    1.167
```

```
0.8334    1.167
4.3204    1.167
7.7714    1.167
9.0005    1.167
* code 1204 - assembling boxgirder
    1    2    1
    2    4    2
    4    6    3
    6    8    2
    8   10    4
    3    5    5
    7    9    5
    2    3    6
    4    5    6
    6    7    6
    8    9    6
* code 1205 control code
    1    2   13    1    1    0    4    7     1.0       1.0
* code 1206 wheels/axle
       0.0
       1.5
       6.0
       7.5 0.833
* code 1207 definition axles
0.00      18.00
10.00     18.00
14.00     18.00
40.00     18.00
44.00     18.00
56.00     18.00
76.00     18.00
* code 1208 - accuracy
0.00001   0.00001   0.00001   .00001    .00001
* code 1209 number sections
   45
   1A   1B   1C   1R   2L   2A   2B   2C   2R   3L   3A   3B   3C   3R
   4L   4A   4B   4C   4R   5L   5A   5B   5C
   6A   6B   6C   7A   7B   7C   8L   8A   8B   8C   9L   9A   9B   9C
  10L  10A  10B  10C  11L  11A  11B  11C
* code 1210 - density conrete
0.156
* code 1211 - extra forces selfweight

* code 1212 - surcharge
1.777
* code 1213 - Prestressing Layout - NONE
•
```

```
* start ; column 11-30 can be used to have your own text on the top of each page
*   5   10   15   20   25   30   35   40   45   50   55   60   65   70   75   80
*   V    V    V    V    V    V    V    V    V    V    V    V    V    V    V    V
00001  1 1     VEH: R4 - MICHIGAN TRUCK TRAIN No.5
* code 1001
Cline Avenue - Load Rating - Double Box - 4 Webs - 71.105' Wide - Single Vehicle
* code 1002
    2         1
* code 1003
*   5   10   15   20   25   30   35   40   45   50   55   60   65   70   75   80
*   V    V    V    V    V    V    V    V    V    V    V    V    V    V    V    V
250.0     170.0     71.1050   1.0       1.0       1.3
* code 1004
    2    0    2
* code 1005
  134
* code 1005a
* location traffic lanes
7.667     19.667
* maximum and minimum truck
6.667     64.438    10.000
* code 1007, linear loads
0.7350    0.441
70.37     0.441
* code 1201
   10    6    5    2    4
* code 1202 coordinates
0.0000    0.0
10.7917   0.0
10.7917   -9.0005
26.6250   0.0
26.6250   -9.0005
49.0217   0.0
49.0217   -9.0005
64.8550   0.0
64.8550   -9.0005
71.1050   0.0
* code 1203 - profile 1
    5    2    3    4
0.0000    0.750
5.2083    0.750
7.7083    1.208
10.2083   1.667
10.7917   1.667
* code 1203 - profile 2
    7    2    3    4
0.0000    1.667
0.5833    1.667
5.5833    0.750
7.9167    0.750
10.2500   0.750
15.2500   1.667
15.8333   1.667
* code 1203 - profile 3
    7    2    3    4
0.0000    1.667
0.5833    1.667
5.5833    0.750
11.1983   0.750
16.8133   0.750
21.8133   1.667
22.3967   1.667
* code 1203 - profile 4
    5    2    3    4
0.0000    1.667
0.5833    1.667
2.5833    1.343
4.5833    1.020
6.2500    0.750
* code 1203 - profile 5
    7    2    3    4
0.0000    1.458
0.5833    1.458
1.5833    0.458
7.9167    0.458
14.2500   0.458
15.2500   1.458
15.8333   1.458
* code 1203 - profile 6
    5    2    3    4
0.0000    1.167
```

```
0.8334    1.167
4.3204    1.167
7.7714    1.167
9.0005    1.167
* code 1204 - assembling boxgirder
    1    2    1
    2    4    2
    4    6    3
    6    8    2
    8   10    4
    3    5    5
    7    9    5
    2    3    6
    4    5    6
    6    7    6
    8    9    6
* code 1205 control code
    1    2   13    1    1    0    4    8     1.0       1.0
* code 1206 wheels/axle
       0.0
       1.5
       6.0
       7.5 0.833
* code 1207 definition axles
0.00      12.00
9.00      16.00
12.50     16.00
21.50     18.00
30.50     18.00
39.50     18.00
48.50     18.00
57.50     18.00
* code 1208 - accuracy
0.00001   0.00001   0.00001   .00001    .00001
* code 1209 number sections
   45
   1A   1B   1C   1R   2L   2A   2B   2C   2R   3L   3A   3B   3C   3R
   4L   4A   4B   4C   4R   5L   5A   5B   5C
   6A   6B   6C   7A   7B   7C   8L   8A   8B   8C   9L   9A   9B   9C
  10L  10A  10B  10C  11L  11A  11B  11C
* code 1210 - density conrete
0.156
* code 1211 - extra forces selfweight

* code 1212 - surcharge
1.777
* code 1213 - Prestressing Layout - NONE
```

```
* start ; column 11-30 can be used to have your own text on the top of each page
*   5   10   15   20   25   30   35   40   45   50   55   60   65   70   75   80
*   V    V    V    V    V    V    V    V    V    V    V    V    V    V    V    V
00001  1 1     VEH: R5 - MICHIGAN TRUCK TRAIN No. 8
* code 1001
Cline Avenue - Load Rating - Double Box - 4 Webs - 71.105' Wide - Single Vehicle
* code 1002
    2         1
* code 1003
*   5   10   15   20   25   30   35   40   45   50   55   60   65   70   75   80
*   V    V    V    V    V    V    V    V    V    V    V    V    V    V    V    V
250.0     170.0     71.1050   1.0       1.0       1.3
* code 1004
    2    0    2
* code 1005
* Vehicle weight is 134.2 Kips, rounded to 135
  135
* code 1005a
* location traffic lanes
7.667     19.667
* maximum and minimum truck
6.667     64.438    10.000
* code 1007, linear loads
0.7350    0.441
70.37     0.441
* code 1201
   10    6    5    2    4
* code 1202 coordinates
0.0000    0.0
10.7917   0.0
10.7917   -9.0005
26.6250   0.0
26.6250   -9.0005
49.0217   0.0
49.0217   -9.0005
64.8550   0.0
64.8550   -9.0005
71.1050   0.0
* code 1203 - profile 1
    5    2    3    4
0.0000    0.750
5.2083    0.750
7.7083    1.208
10.2083   1.667
10.7917   1.667
* code 1203 - profile 2
    7    2    3    4
0.0000    1.667
0.5833    1.667
5.5833    0.750
7.9167    0.750
10.2500   0.750
15.2500   1.667
15.8333   1.667
* code 1203 - profile 3
    7    2    3    4
0.0000    1.667
0.5833    1.667
5.5833    0.750
11.1983   0.750
16.8133   0.750
21.8133   1.667
22.3967   1.667
* code 1203 - profile 4
    5    2    3    4
0.0000    1.667
0.5833    1.667
2.5833    1.343
4.5833    1.020
6.2500    0.750
* code 1203 - profile 5
    7    2    3    4
0.0000    1.458
0.5833    1.458
1.5833    0.458
7.9167    0.458
14.2500   0.458
15.2500   1.458
15.8333   1.458
* code 1203 - profile 6
    5    2    3    4
```

```
0.0000    1.167
0.8334    1.167
4.3204    1.167
7.7714    1.167
9.0005    1.167
* code 1204 - assembling boxgirder
    1    2    1
    2    4    2
    4    6    3
    6    8    2
    8   10    4
    3    5    5
    7    9    5
    2    3    6
    4    5    6
    6    7    6
    8    9    6
* code 1205 control code
    1    2   13    1    1    0    4   11     1.0       1.0
* code 1206 wheels/axle
       0.0
       1.5
       6.0
       7.5 0.833
* code 1207 definition axles
0.00      12.00
9.00      13.40
12.50     13.40
21.50     10.90
25.00     10.90
28.50     10.90
32.00     10.90
35.50     10.90
39.00     10.90
48.00     15.00
57.00     15.00
* code 1208 - accuracy
0.00001   0.00001   0.00001   .00001    .00001
* code 1209 number sections
   45
   1A   1B   1C   1R   2L   2A   2B   2C   2R   3L   3A   3B   3C   3R
   4L   4A   4B   4C   4R   5L   5A   5B   5C
   6A   6B   6C   7A   7B   7C   8L   8A   8B   8C   9L   9A   9B   9C
  10L  10A  10B  10C  11L  11A  11B  11C
* code 1210 - density conrete
0.156
* code 1211 - extra forces selfweight

* code 1212 - surcharge
1.777
* code 1213 - Prestressing Layout - NONE
```

```
* start ; column 11-30 can be used to have your own text on the top of each page
*   5   10   15   20   25   30   35   40   45   50   55   60   65   70   75   80
*   V    V    V    V    V    V    V    V    V    V    V    V    V    V    V    V
00001  1 1     VEH: S1 - SPECIAL TRUCK 11 AXLE
* code 1001
Cline Avenue - Load Rating - Double Box - 4 Webs - 71.105' Wide - Single Vehicle
* code 1002
    2         1
* code 1003
*   5   10   15   20   25   30   35   40   45   50   55   60   65   70   75   80
*   V    V    V    V    V    V    V    V    V    V    V    V    V    V    V    V
250.0     170.0     71.1050   1.0       1.0       1.3
* code 1004
    2    0    2
* code 1005
  258
* code 1005a
* location traffic lanes
7.667     19.667
* maximum and minimum truck
6.667     64.438    10.000
* code 1007, linear loads
0.7350    0.441
70.37     0.441
* code 1201
   10    6    5    2    4
* code 1202 coordinates
0.0000    0.0
10.7917   0.0
10.7917   -9.0005
26.6250   0.0
26.6250   -9.0005
49.0217   0.0
49.0217   -9.0005
64.8550   0.0
64.8550   -9.0005
71.1050   0.0
* code 1203 - profile 1
    5    2    3    4
0.0000    0.750
5.2083    0.750
7.7083    1.208
10.2083   1.667
10.7917   1.667
* code 1203 - profile 2
    7    2    3    4
0.0000    1.667
0.5833    1.667
5.5833    0.750
7.9167    0.750
10.2500   0.750
15.2500   1.667
15.8333   1.667
* code 1203 - profile 3
    7    2    3    4
0.0000    1.667
0.5833    1.667
5.5833    0.750
11.1983   0.750
16.8133   0.750
21.8133   1.667
22.3967   1.667
* code 1203 - profile 4
    5    2    3    4
0.0000    1.667
0.5833    1.667
2.5833    1.343
4.5833    1.020
6.2500    0.750
* code 1203 - profile 5
    7    2    3    4
0.0000    1.458
0.5833    1.458
1.5833    0.458
7.9167    0.458
14.2500   0.458
15.2500   1.458
15.8333   1.458
* code 1203 - profile 6
    5    2    3    4
0.0000    1.167
```

```
0.8334    1.167
4.3204    1.167
7.7714    1.167
9.0005    1.167
* code 1204 - assembling boxgirder
    1    2    1
    2    4    2
    4    6    3
    6    8    2
    8   10    4
    3    5    5
    7    9    5
    2    3    6
    4    5    6
    6    7    6
    8    9    6
* code 1205 control code
    1    2   13    1    1    0    4   11     1.0       1.0
* code 1206 wheels/axle
       0.0
       1.5
       6.0
       7.5 0.833
* code 1207 definition axles
0.00      12.00
11.50     24.60
16.67     24.60
21.67     24.60
34.83     24.60
39.33     24.60
89.92     24.60
94.42     24.60
98.92     24.60
112.50     24.60
117.00     24.60
* code 1208 - accuracy
0.00001   0.00001   0.00001   .00001    .00001
* code 1209 number sections
   45
   1A   1B   1C   1R   2L   2A   2B   2C   2R   3L   3A   3B   3C   3R
   4L   4A   4B   4C   4R   5L   5A   5B   5C
   6A   6B   6C   7A   7B   7C   8L   8A   8B   8C   9L   9A   9B   9C
  10L  10A  10B  10C  11L  11A  11B  11C
* code 1210 - density conrete
0.156
* code 1211 - extra forces selfweight

* code 1212 - surcharge
1.777
* code 1213 - Prestressing Layout - NONE
```

```
* start ; column 11-30 can be used to have your own text on the top of each page
*   5   10   15   20   25   30   35   40   45   50   55   60   65   70   75   80
*   V    V    V    V    V    V    V    V    V    V    V    V    V    V    V    V
00001  1 1     VEH: S2 - SPECIAL TRUCK - 13 AXLE
* code 1001
Cline Avenue - Load Rating - Double Box - 4 Webs - 71.105' Wide - Single Vehicle
* code 1002
    2         1
* code 1003
*   5   10   15   20   25   30   35   40   45   50   55   60   65   70   75   80
*   V    V    V    V    V    V    V    V    V    V    V    V    V    V    V    V
250.0     170.0     71.1050   1.0       1.0       1.3
* code 1004
    2    0    2
* code 1005
  267
* code 1005a
* location traffic lanes
7.667     19.667
* maximum and minimum truck
6.667     64.438    10.000
* code 1007, linear loads
0.7350    0.441
70.37     0.441
* code 1201
   10    6    5    2    4
* code 1202 coordinates
0.0000    0.0
10.7917   0.0
10.7917   -9.0005
26.6250   0.0
26.6250   -9.0005
49.0217   0.0
49.0217   -9.0005
64.8550   0.0
64.8550   -9.0005
71.1050   0.0
* code 1203 - profile 1
    5    2    3    4
0.0000    0.750
5.2083    0.750
7.7083    1.208
10.2083   1.667
10.7917   1.667
* code 1203 - profile 2
    7    2    3    4
0.0000    1.667
0.5833    1.667
5.5833    0.750
7.9167    0.750
10.2500   0.750
15.2500   1.667
15.8333   1.667
* code 1203 - profile 3
    7    2    3    4
0.0000    1.667
0.5833    1.667
5.5833    0.750
11.1983   0.750
16.8133   0.750
21.8133   1.667
22.3967   1.667
* code 1203 - profile 4
    5    2    3    4
0.0000    1.667
0.5833    1.667
2.5833    1.343
4.5833    1.020
6.2500    0.750
* code 1203 - profile 5
    7    2    3    4
0.0000    1.458
0.5833    1.458
1.5833    0.458
7.9167    0.458
14.2500   0.458
15.2500   1.458
15.8333   1.458
* code 1203 - profile 6
    5    2    3    4
0.0000    1.167
```

```
0.8334    1.167
4.3204    1.167
7.7714    1.167
9.0005    1.167
* code 1204 - assembling boxgirder
    1    2    1
    2    4    2
    4    6    3
    6    8    2
    8   10    4
    3    5    5
    7    9    5
    2    3    6
    4    5    6
    6    7    6
    8    9    6
* code 1205 control code
    1    2   13    1    1    0    4   13     1.0       1.0
* code 1206 wheels/axle
       0.0
       1.5
       6.0
       7.5 0.833
* code 1207 definition axles
0.00      15.00
16.50     21.00
21.00     21.00
25.50     21.00
39.50     21.00
44.00     21.00
48.50     21.00
96.50     21.00
101.00    21.00
105.50    21.00
121.00    21.00
125.50    21.00
130.00    21.00
* code 1208 - accuracy
0.00001   0.00001   0.00001   .00001    .00001
* code 1209 number sections
   45
   1A   1B   1C   1R   2L   2A   2B   2C   2R   3L   3A   3B   3C   3R
   4L   4A   4B   4C   4R   5L   5A   5B   5C
   6A   6B   6C   7A   7B   7C   8L   8A   8B   8C   9L   9A   9B   9C
  10L  10A  10B  10C  11L  11A  11B  11C
* code 1210 - density conrete
0.156
* code 1211 - extra forces selfweight

* code 1212 - surcharge
1.777
* code 1213 - Prestressing Layout - NONE
```

```
* start ; column 11-30 can be used to have your own text on the top of each page
*   5   10   15   20   25   30   35   40   45   50   55   60   65   70   75   80
*   V    V    V    V    V    V    V    V    V    V    V    V    V    V    V    V
00001  1 1     VEH: S3 - SPECIAL TRUCK - 14 AXLE
* code 1001
Cline Avenue - Load Rating - Double Box - 4 Webs - 71.105' Wide - Single Vehicle
* code 1002
    2         1
* code 1003
*   5   10   15   20   25   30   35   40   45   50   55   60   65   70   75   80
*   V    V    V    V    V    V    V    V    V    V    V    V    V    V    V    V
250.0     170.0     71.1050   1.0       1.0       1.3
* code 1004
    2    0    2
* code 1005
  350
* code 1005a
* location traffic lanes
7.667     19.667
* maximum and minimum truck
6.667     64.438    10.000
* code 1007, linear loads
0.7350    0.441
70.37     0.441
* code 1201
   10    6    5    2    4
* code 1202 coordinates
0.0000    0.0
10.7917   0.0
10.7917   -9.0005
26.6250   0.0
26.6250   -9.0005
49.0217   0.0
49.0217   -9.0005
64.8550   0.0
64.8550   -9.0005
71.1050   0.0
* code 1203 - profile 1
    5    2    3    4
0.0000    0.750
5.2083    0.750
7.7083    1.208
10.2083   1.667
10.7917   1.667
* code 1203 - profile 2
    7    2    3    4
0.0000    1.667
0.5833    1.667
5.5833    0.750
7.9167    0.750
10.2500   0.750
15.2500   1.667
15.8333   1.667
* code 1203 - profile 3
    7    2    3    4
0.0000    1.667
0.5833    1.667
5.5833    0.750
11.1983   0.750
16.8133   0.750
21.8133   1.667
22.3967   1.667
* code 1203 - profile 4
    5    2    3    4
0.0000    1.667
0.5833    1.667
2.5833    1.343
4.5833    1.020
6.2500    0.750
* code 1203 - profile 5
    7    2    3    4
0.0000    1.458
0.5833    1.458
1.5833    0.458
7.9167    0.458
14.2500   0.458
15.2500   1.458
15.8333   1.458
* code 1203 - profile 6
    5    2    3    4
0.0000    1.167
```

```
0.8334    1.167
4.3204    1.167
7.7714    1.167
9.0005    1.167
* code 1204 - assembling boxgirder
    1    2    1
    2    4    2
    4    6    3
    6    8    2
    8   10    4
    3    5    5
    7    9    5
    2    3    6
    4    5    6
    6    7    6
    8    9    6
* code 1205 control code
    1    2   13    1    1    0    4   14     1.0       1.0
* code 1206 wheels/axle
       0.0
       1.5
       6.0
       7.5 0.833
* code 1207 definition axles
0.00      13.00
14.50     25.00
19.00     25.00
23.50     25.00
50.50     23.50
54.67     23.50
58.83     23.50
102.83    23.50
107.33    28.00
111.83    28.00
116.33    28.00
132.17    28.00
136.67    28.00
141.17    28.00
* code 1208 - accuracy
0.00001   0.00001   0.00001   .00001    .00001
* code 1209 number sections
   45
   1A   1B   1C   1R   2L   2A   2B   2C   2R   3L   3A   3B   3C   3R
   4L   4A   4B   4C   4R   5L   5A   5B   5C
   6A   6B   6C   7A   7B   7C   8L   8A   8B   8C   9L   9A   9B   9C
  10L  10A  10B  10C  11L  11A  11B  11C
* code 1210 - density conrete
0.156
* code 1211 - extra forces selfweight

* code 1212 - surcharge
1.777
* code 1213 - Prestressing Layout - NONE
•
```

```
* start ; column 11-30 can be used to have your own text on the top of each page
*   5   10   15   20   25   30   35   40   45   50   55   60   65   70   75   80
*   V    V    V    V    V    V    V    V    V    V    V    V    V    V    V    V
00001  1 1     VEH: S4 - SUPER LOAD -19 AXLES
* code 1001
Cline Avenue - Load Rating - Double Box - 4 Webs - 71.105' Wide - Single Vehicle
* code 1002
    2         1
* code 1003
*   5   10   15   20   25   30   35   40   45   50   55   60   65   70   75   80
*   V    V    V    V    V    V    V    V    V    V    V    V    V    V    V    V
250.0     170.0     71.1050   1.0       1.0       1.3
* code 1004
    2    0    2
* code 1005
  305
* code 1005a
* location traffic lanes
7.667     19.667
* maximum and minimum truck
6.667     64.438    10.000
* code 1007, linear loads
0.7350    0.441
70.37     0.441
* code 1201
   10    6    5    2    4
* code 1202 coordinates
0.0000    0.0
10.7917   0.0
10.7917   -9.0005
26.6250   0.0
26.6250   -9.0005
49.0217   0.0
49.0217   -9.0005
64.8550   0.0
64.8550   -9.0005
71.1050   0.0
* code 1203 - profile 1
    5    2    3    4
0.0000    0.750
5.2083    0.750
7.7083    1.208
10.2083   1.667
10.7917   1.667
* code 1203 - profile 2
    7    2    3    4
0.0000    1.667
0.5833    1.667
5.5833    0.750
7.9167    0.750
10.2500   0.750
15.2500   1.667
15.8333   1.667
* code 1203 - profile 3
    7    2    3    4
0.0000    1.667
0.5833    1.667
5.5833    0.750
11.1983   0.750
16.8133   0.750
21.8133   1.667
22.3967   1.667
* code 1203 - profile 4
    5    2    3    4
0.0000    1.667
0.5833    1.667
2.5833    1.343
4.5833    1.020
6.2500    0.750
* code 1203 - profile 5
    7    2    3    4
0.0000    1.458
0.5833    1.458
1.5833    0.458
7.9167    0.458
14.2500   0.458
15.2500   1.458
15.8333   1.458
* code 1203 - profile 6
    5    2    3    4
0.0000    1.167
```

```
0.8334    1.167
4.3204    1.167
7.7714    1.167
9.0005    1.167
* code 1204 - assembling boxgirder
    1    2    1
    2    4    2
    4    6    3
    6    8    2
    8   10    4
    3    5    5
    7    9    5
    2    3    6
    4    5    6
    6    7    6
    8    9    6
* code 1205 control code
    1    2   13    1    1    0    4   19     1.0       1.0
* code 1206 wheels/axle
       0.0
       1.5
       6.0
       7.5 0.833
* code 1207 definition axles
0.00      13.00
13.50     16.48
17.83     16.48
31.33     16.48
35.42     15.99
39.50     15.99
45.50     15.99
49.58     16.37
53.67     16.37
103.58    16.37
107.67    16.64
114.17    16.64
118.25    15.15
122.33    15.15
126.42    15.15
135.92    15.15
140.00    17.20
144.08    17.20
148.17    17.20
* code 1208 - accuracy
0.00001   0.00001   0.00001   .00001    .00001
* code 1209 number sections
   45
   1A   1B   1C   1R   2L   2A   2B   2C   2R   3L   3A   3B   3C   3R
   4L   4A   4B   4C   4R   5L   5A   5B   5C
   6A   6B   6C   7A   7B   7C   8L   8A   8B   8C   9L   9A   9B   9C
  10L  10A  10B  10C  11L  11A  11B  11C
* code 1210 - density conrete
0.156
* code 1211 - extra forces selfweight

* code 1212 - surcharge
1.777
* code 1213 - Prestressing Layout - NONE
•
```

```
* start ; column 11-30 can be used to have your own text on the top of each page
*   5   10   15   20   25   30   35   40   45   50   55   60   65   70   75   80
*   V    V    V    V    V    V    V    V    V    V    V    V    V    V    V    V
00001  1 1     VEH: S5 - SUPERLOAD - 19 AXLE
* code 1001
Cline Avenue - Load Rating - Double Box - 4 Webs - 71.105' Wide - Single Vehicle
* code 1002
    2         1
* code 1003
*   5   10   15   20   25   30   35   40   45   50   55   60   65   70   75   80
*   V    V    V    V    V    V    V    V    V    V    V    V    V    V    V    V
250.0     170.0     71.1050   1.0       1.0       1.3
* code 1004
    2    0    2
* code 1005
  480
* code 1005a
* location traffic lanes
7.667     19.667
* maximum and minimum truck
6.667     64.438    10.000
* code 1007, linear loads
0.7350    0.441
70.37     0.441
* code 1201
   10    6    5    2    4
* code 1202 coordinates
0.0000    0.0
10.7917   0.0
10.7917   -9.0005
26.6250   0.0
26.6250   -9.0005
49.0217   0.0
49.0217   -9.0005
64.8550   0.0
64.8550   -9.0005
71.1050   0.0
* code 1203 - profile 1
    5    2    3    4
0.0000    0.750
5.2083    0.750
7.7083    1.208
10.2083   1.667
10.7917   1.667
* code 1203 - profile 2
    7    2    3    4
0.0000    1.667
0.5833    1.667
5.5833    0.750
7.9167    0.750
10.2500   0.750
15.2500   1.667
15.8333   1.667
* code 1203 - profile 3
    7    2    3    4
0.0000    1.667
0.5833    1.667
5.5833    0.750
11.1983   0.750
16.8133   0.750
21.8133   1.667
22.3967   1.667
* code 1203 - profile 4
    5    2    3    4
0.0000    1.667
0.5833    1.667
2.5833    1.343
4.5833    1.020
6.2500    0.750
* code 1203 - profile 5
    7    2    3    4
0.0000    1.458
0.5833    1.458
1.5833    0.458
7.9167    0.458
14.2500   0.458
15.2500   1.458
15.8333   1.458
* code 1203 - profile 6
    5    2    3    4
0.0000    1.167
```

```
0.8334    1.167
4.3204    1.167
7.7714    1.167
9.0005    1.167
* code 1204 - assembling boxgirder
    1    2    1
    2    4    2
    4    6    3
    6    8    2
    8   10    4
    3    5    5
    7    9    5
    2    3    6
    4    5    6
    6    7    6
    8    9    6
* code 1205 control code
    1    2   13    1    1    0    4   19     1.0       1.0
* code 1206 wheels/axle
       0.0
       1.5
       6.0
       7.5 0.833
* code 1207 definition axles
0.00      12.88
12.50     25.95
17.50     25.95
31.58     25.95
36.58     25.95
41.58     25.95
55.67     25.95
60.67     25.95
65.67     25.95
115.67    25.95
120.67    25.95
125.67    25.95
139.75    25.95
144.75    25.95
149.75    25.95
163.83    25.95
168.83    25.95
173.83    25.95
178.83    25.95
* code 1208 - accuracy
0.00001   0.00001   0.00001   .00001    .00001
* code 1209 number sections
   45
   1A   1B   1C   1R   2L   2A   2B   2C   2R   3L   3A   3B   3C   3R
   4L   4A   4B   4C   4R   5L   5A   5B   5C
   6A   6B   6C   7A   7B   7C   8L   8A   8B   8C   9L   9A   9B   9C
  10L  10A  10B  10C  11L  11A  11B  11C
* code 1210 - density conrete
0.156
* code 1211 - extra forces selfweight

* code 1212 - surcharge
1.777
* code 1213 - Prestressing Layout - NONE
•
```

4.7.3 Brug Output AASHTO Lanes (Summary)

1_III_B_HL93_truck_EL.OUT 9/11/2009

VEH: HL93- TRUCK - S BRUG(5.75.44) page 55
date 11/09/2009; time 13:25:58
Cline Avenue - Load Rating - Double Box - 4 Webs - 71.105' W

Summary of the results (Maximum)

Section	--- Deadload ---- Moment	Ax.Frc	----- P.T. ------ Moment	Ax.Frc	--- Live load --- Moment	Ax.Frc
1 a	-3.62	0.35	0.00	0.00	1.52	0.07
1 b	-7.11	0.78	0.00	0.00	1.13	0.20
1 c	-11.91	1.48	0.00	0.00	-0.01	0.00
1 right	-13.26	1.69	0.00	0.00	-0.01	0.00
2 left	-6.63	2.28	0.00	0.00	0.04	-0.01
2 a	-5.69	2.07	0.00	0.00	0.02	-0.01
2 b	-0.81	0.90	0.00	0.00	3.77	-0.02
2 c	-0.16	0.67	0.00	0.00	4.20	-0.34
2 right	-4.78	1.22	0.00	0.00	-0.03	1.29
3 left	-7.52	1.10	0.00	0.00	3.01	0.18
3 a	-6.39	0.85	0.00	0.00	2.85	0.85
3 b	0.13	-0.62	0.00	0.00	4.50	0.13
3 c	2.24	-1.25	0.00	0.00	5.69	-0.15
3 right	-7.99	0.35	0.00	0.00	2.68	0.02
4 left	-5.30	0.49	0.00	0.00	-0.02	1.19
4 a	-4.42	0.32	0.00	0.00	1.39	0.83
4 b	0.00	-0.48	0.00	0.00	4.06	-0.16
4 c	0.45	-0.52	0.00	0.00	4.22	-0.50
4 right	-4.89	0.79	0.00	0.00	0.07	0.00
5 left	-6.22	0.83	0.00	0.00	0.00	0.01
5 a	-5.21	0.66	0.00	0.00	0.00	0.01
5 b	-2.44	0.25	0.00	0.00	1.01	0.08
5 c	-0.60	0.05	0.00	0.00	0.33	0.01
6 a	-0.90	-0.35	0.00	0.00	0.87	-0.95
6 b	-0.40	-0.01	0.00	0.00	0.71	-0.75
6 c	0.84	1.01	0.00	0.00	0.03	-0.02
7 a	-1.06	0.09	0.00	0.00	0.45	-0.60
7 b	-0.55	0.39	0.00	0.00	0.36	-0.48
7 c	0.81	1.26	0.00	0.00	0.03	-0.18
8 top	-6.63	-4.06	0.00	0.00	4.54	-1.91
8 a	-6.14	-3.58	0.00	0.00	3.93	-1.68
8 b	-4.06	-1.46	0.00	0.00	2.00	-0.78
8 c	-2.01	0.29	0.00	0.00	0.52	-0.23
9 top	2.74	-3.43	0.00	0.00	6.35	-3.15
9 a	2.65	-3.00	0.00	0.00	5.43	-2.76
9 b	2.26	-1.11	0.00	0.00	2.56	-1.29
9 c	1.87	0.43	0.00	0.00	0.26	0.15
10 top	-2.69	-3.61	0.00	0.00	6.86	-1.59
10 a	-2.57	-3.18	0.00	0.00	6.01	-1.39
10 b	-2.09	-1.25	0.00	0.00	3.04	-0.59
10 c	-1.62	0.35	0.00	0.00	0.58	-0.33
11 top	1.33	-3.33	0.00	0.00	2.55	-7.07
11 a	1.35	-2.92	0.00	0.00	2.15	-5.98
11 b	1.47	-1.10	0.00	0.00	0.85	-2.40
11 c	1.59	0.41	0.00	0.00	0.26	0.06

1_III_B_HL93_truck_EL.OUT 9/11/2009

VEH: HL93- TRUCK - S BRUG(5.75.44) page 56
date 11/09/2009; time 13:25:58
Cline Avenue - Load Rating - Double Box - 4 Webs - 71.105' W

Summary of the results (Minimum)

Section	--- Deadload ---- Moment	Ax.Frc	----- P.T. ------ Moment	Ax.Frc	--- Live load --- Moment	Ax.Frc
1 a	-3.62	0.35	0.00	0.00	-0.74	0.06
1 b	-7.11	0.78	0.00	0.00	-6.05	0.17
1 c	-11.91	1.48	0.00	0.00	-9.77	0.54
1 right	-13.26	1.69	0.00	0.00	-12.31	0.79
2 left	-6.63	2.28	0.00	0.00	-6.16	-0.08
2 a	-5.69	2.07	0.00	0.00	-5.43	-0.15
2 b	-0.81	0.90	0.00	0.00	-0.67	0.67
2 c	-0.16	0.67	0.00	0.00	-0.50	0.40
2 right	-4.78	1.22	0.00	0.00	-5.61	-0.29
3 left	-7.52	1.10	0.00	0.00	-9.01	0.29
3 a	-6.39	0.85	0.00	0.00	-7.93	0.23
3 b	0.13	-0.62	0.00	0.00	-2.87	-0.16
3 c	2.24	-1.25	0.00	0.00	-0.19	-0.17
3 right	-7.99	0.35	0.00	0.00	-8.90	0.25
4 left	-5.30	0.49	0.00	0.00	-5.62	-0.47
4 a	-4.42	0.32	0.00	0.00	-4.95	-0.52
4 b	0.00	-0.48	0.00	0.00	-0.78	0.33
4 c	0.45	-0.52	0.00	0.00	-0.54	0.23
4 right	-4.89	0.79	0.00	0.00	-6.14	-0.23
5 left	-6.22	0.83	0.00	0.00	-6.08	0.72
5 a	-5.21	0.66	0.00	0.00	-4.21	0.45
5 b	-2.44	0.25	0.00	0.00	0.00	0.00
5 c	-0.60	0.05	0.00	0.00	-0.06	0.02
6 a	-0.90	-0.35	0.00	0.00	-0.37	0.23
6 b	-0.40	-0.01	0.00	0.00	-0.32	0.23
6 c	0.84	1.01	0.00	0.00	-0.06	0.82
7 a	-1.06	0.09	0.00	0.00	-0.64	0.64
7 b	-0.55	0.39	0.00	0.00	-0.55	0.63
7 c	0.81	1.26	0.00	0.00	-0.06	0.83
8 top	-6.63	-4.06	0.00	0.00	-9.33	-7.08
8 a	-6.14	-3.58	0.00	0.00	-7.97	-6.03
8 b	-4.06	-1.46	0.00	0.00	-3.73	-2.52
8 c	-2.01	0.29	0.00	0.00	-0.21	-0.56
9 top	2.74	-3.43	0.00	0.00	-6.74	-1.60
9 a	2.65	-3.00	0.00	0.00	-5.90	-1.39
9 b	2.26	-1.11	0.00	0.00	-2.98	-0.59
9 c	1.87	0.43	0.00	0.00	-0.58	-0.34
10 top	-2.69	-3.61	0.00	0.00	-6.25	-3.14
10 a	-2.57	-3.18	0.00	0.00	-5.34	-2.75
10 b	-2.09	-1.25	0.00	0.00	-2.51	-1.28
10 c	-1.62	0.35	0.00	0.00	-0.30	-0.19
11 top	1.33	-3.33	0.00	0.00	-4.53	-1.91
11 a	1.35	-2.92	0.00	0.00	-3.92	-1.68
11 b	1.47	-1.10	0.00	0.00	-2.00	-0.78
11 c	1.59	0.41	0.00	0.00	-0.52	-0.24

VEH: HL93- TANDEM- S BRUG(5.75.44) page 55
date 11/09/2009; time 13:25:58
Cline Avenue - Load Rating - Double Box - 4 Webs - 71.105' W

Summary of the results (Maximum)

Section	--- Deadload ---- Moment	Ax.Frc	----- P.T. ------ Moment	Ax.Frc	--- Live load --- Moment	Ax.Frc
1 a	-3.62	0.35	0.00	0.00	1.12	0.08
1 b	-7.11	0.78	0.00	0.00	0.66	0.26
1 c	-11.91	1.48	0.00	0.00	0.00	0.00
1 right	-13.26	1.69	0.00	0.00	0.00	0.00
2 left	-6.63	2.28	0.00	0.00	0.03	-0.01
2 a	-5.69	2.07	0.00	0.00	0.01	-0.01
2 b	-0.81	0.90	0.00	0.00	3.30	-0.02
2 c	-0.16	0.67	0.00	0.00	3.77	-0.32
2 right	-4.78	1.22	0.00	0.00	0.20	-0.20
3 left	-7.52	1.10	0.00	0.00	2.21	0.09
3 a	-6.39	0.85	0.00	0.00	2.05	0.08
3 b	0.13	-0.62	0.00	0.00	3.63	0.10
3 c	2.24	-1.25	0.00	0.00	5.29	-0.19
3 right	-7.99	0.35	0.00	0.00	1.58	0.00
4 left	-5.30	0.49	0.00	0.00	-0.45	0.14
4 a	-4.42	0.32	0.00	0.00	-0.15	0.95
4 b	0.00	-0.48	0.00	0.00	3.52	-0.11
4 c	0.45	-0.52	0.00	0.00	3.78	-0.45
4 right	-4.89	0.79	0.00	0.00	0.05	0.00
5 left	-6.22	0.83	0.00	0.00	0.00	0.01
5 a	-5.21	0.66	0.00	0.00	0.00	0.01
5 b	-2.44	0.25	0.00	0.00	0.46	0.16
5 c	-0.60	0.05	0.00	0.00	0.22	0.02
6 a	-0.90	-0.35	0.00	0.00	0.72	-0.88
6 b	-0.40	-0.01	0.00	0.00	0.56	-0.65
6 c	0.84	1.01	0.00	0.00	0.03	0.01
7 a	-1.06	0.09	0.00	0.00	0.42	-0.63
7 b	-0.55	0.39	0.00	0.00	0.31	-0.48
7 c	0.81	1.26	0.00	0.00	0.03	-0.10
8 top	-6.63	-4.06	0.00	0.00	4.45	-2.13
8 a	-6.14	-3.58	0.00	0.00	3.80	-1.90
8 b	-4.06	-1.46	0.00	0.00	1.80	-0.94
8 c	-2.01	0.29	0.00	0.00	0.39	-0.27
9 top	2.74	-3.43	0.00	0.00	6.67	-3.51
9 a	2.65	-3.00	0.00	0.00	5.63	-3.14
9 b	2.26	-1.11	0.00	0.00	2.48	-1.64
9 c	1.87	0.43	0.00	0.00	0.22	0.11
10 top	-2.69	-3.61	0.00	0.00	6.26	-2.31
10 a	-2.57	-3.18	0.00	0.00	5.21	-1.72
10 b	-2.09	-1.25	0.00	0.00	2.50	-0.82
10 c	-1.62	0.35	0.00	0.00	0.43	-0.40
11 top	1.33	-3.33	0.00	0.00	2.05	-6.14
11 a	1.35	-2.92	0.00	0.00	1.74	-5.45
11 b	1.47	-1.10	0.00	0.00	0.69	-2.63
11 c	1.59	0.41	0.00	0.00	0.21	0.05

VEH: HL93- TANDEM- S BRUG(5.75.44) page 56
date 11/09/2009; time 13:25:58
Cline Avenue - Load Rating - Double Box - 4 Webs - 71.105' W

Summary of the results (Minimum)

Section	--- Deadload ---- Moment	Ax.Frc	----- P.T. ------ Moment	Ax.Frc	--- Live load --- Moment	Ax.Frc
1 a	-3.62	0.35	0.00	0.00	-1.28	0.06
1 b	-7.11	0.78	0.00	0.00	-6.36	0.20
1 c	-11.91	1.48	0.00	0.00	-10.82	0.61
1 right	-13.26	1.69	0.00	0.00	-13.00	0.79
2 left	-6.63	2.28	0.00	0.00	-6.93	0.08
2 a	-5.69	2.07	0.00	0.00	-6.08	-0.10
2 b	-0.81	0.90	0.00	0.00	-0.85	0.63
2 c	-0.16	0.67	0.00	0.00	-0.49	0.37
2 right	-4.78	1.22	0.00	0.00	-6.55	-0.03
3 left	-7.52	1.10	0.00	0.00	-10.51	0.32
3 a	-6.39	0.85	0.00	0.00	-9.52	0.23
3 b	0.13	-0.62	0.00	0.00	-3.01	-0.18
3 c	2.24	-1.25	0.00	0.00	-0.15	-0.13
3 right	-7.99	0.35	0.00	0.00	-10.44	0.29
4 left	-5.30	0.49	0.00	0.00	-6.55	-0.16
4 a	-4.42	0.32	0.00	0.00	-5.76	-0.36
4 b	0.00	-0.48	0.00	0.00	-0.84	0.41
4 c	0.45	-0.52	0.00	0.00	-0.48	0.27
4 right	-4.89	0.79	0.00	0.00	-6.92	-0.08
5 left	-6.22	0.83	0.00	0.00	-6.36	0.71
5 a	-5.21	0.66	0.00	0.00	-4.61	0.53
5 b	-2.44	0.25	0.00	0.00	-0.28	0.16
5 c	-0.60	0.05	0.00	0.00	-0.12	0.02
6 a	-0.90	-0.35	0.00	0.00	-0.29	0.16
6 b	-0.40	-0.01	0.00	0.00	-0.25	0.18
6 c	0.84	1.01	0.00	0.00	-0.05	0.85
7 a	-1.06	0.09	0.00	0.00	-0.48	0.49
7 b	-0.55	0.39	0.00	0.00	-0.40	0.50
7 c	0.81	1.26	0.00	0.00	-0.05	0.85
8 top	-6.63	-4.06	0.00	0.00	-8.90	-6.43
8 a	-6.14	-3.58	0.00	0.00	-7.56	-5.73
8 b	-4.06	-1.46	0.00	0.00	-3.36	-2.82
8 c	-2.01	0.29	0.00	0.00	-0.16	-0.63
9 top	2.74	-3.43	0.00	0.00	-6.17	-2.31
9 a	2.65	-3.00	0.00	0.00	-5.13	-1.73
9 b	2.26	-1.11	0.00	0.00	-2.46	-0.82
9 c	1.87	0.43	0.00	0.00	-0.43	-0.40
10 top	-2.69	-3.61	0.00	0.00	-6.60	-3.50
10 a	-2.57	-3.18	0.00	0.00	-5.57	-3.14
10 b	-2.09	-1.25	0.00	0.00	-2.44	-1.64
10 c	-1.62	0.35	0.00	0.00	-0.23	-0.22
11 top	1.33	-3.33	0.00	0.00	-4.43	-2.12
11 a	1.35	-2.92	0.00	0.00	-3.79	-1.89
11 b	1.47	-1.10	0.00	0.00	-1.80	-0.94
11 c	1.59	0.41	0.00	0.00	-0.39	-0.27

1_III_B_R1_EL.OUT 9/11/2009

VEH: R1 - TOLL ROAD BRUG(5.75.44) page 55
date 11/09/2009; time 13:25:59
Cline Avenue - Load Rating - Double Box - 4 Webs - 71.105' W

Summary of the results (Maximum)

Section	--- Deadload ----		----- P.T. ------		--- Live load ---	
	Moment	Ax.Frc	Moment	Ax.Frc	Moment	Ax.Frc
1 a	-3.62	0.35	0.00	0.00	0.60	0.11
1 b	-7.11	0.78	0.00	0.00	0.40	0.26
1 c	-11.91	1.48	0.00	0.00	-0.01	0.00
1 right	-13.26	1.69	0.00	0.00	-0.01	0.00
2 left	-6.63	2.28	0.00	0.00	0.05	-0.01
2 a	-5.69	2.07	0.00	0.00	0.02	-0.01
2 b	-0.81	0.90	0.00	0.00	3.23	0.00
2 c	-0.16	0.67	0.00	0.00	3.64	-0.39
2 right	-4.78	1.22	0.00	0.00	0.70	1.26
3 left	-7.52	1.10	0.00	0.00	3.67	0.22
3 a	-6.39	0.85	0.00	0.00	3.50	0.80
3 b	0.13	-0.62	0.00	0.00	4.23	0.19
3 c	2.24	-1.25	0.00	0.00	4.81	-0.18
3 right	-7.99	0.35	0.00	0.00	3.37	0.01
4 left	-5.30	0.49	0.00	0.00	0.71	1.15
4 a	-4.42	0.32	0.00	0.00	1.51	0.81
4 b	0.00	-0.48	0.00	0.00	3.58	-0.17
4 c	0.45	-0.52	0.00	0.00	3.65	-0.59
4 right	-4.89	0.79	0.00	0.00	0.08	0.01
5 left	-6.22	0.83	0.00	0.00	0.00	0.01
5 a	-5.21	0.66	0.00	0.00	0.00	0.01
5 b	-2.44	0.25	0.00	0.00	0.32	0.10
5 c	-0.60	0.05	0.00	0.00	0.12	0.02
6 a	-0.90	-0.35	0.00	0.00	1.04	-1.14
6 b	-0.40	-0.01	0.00	0.00	0.87	-0.93
6 c	0.84	1.01	0.00	0.00	0.04	-0.04
7 a	-1.06	0.09	0.00	0.00	0.54	-0.71
7 b	-0.55	0.39	0.00	0.00	0.44	-0.58
7 c	0.81	1.26	0.00	0.00	0.04	-0.22
8 top	-6.63	-4.06	0.00	0.00	5.17	-1.61
8 a	-6.14	-3.58	0.00	0.00	4.58	-1.44
8 b	-4.06	-1.46	0.00	0.00	2.44	-0.72
8 c	-2.01	0.29	0.00	0.00	0.65	-0.22
9 top	2.74	-3.43	0.00	0.00	7.12	-2.56
9 a	2.65	-3.00	0.00	0.00	6.25	-2.29
9 b	2.26	-1.11	0.00	0.00	3.12	-1.17
9 c	1.87	0.43	0.00	0.00	0.32	0.18
10 top	-2.69	-3.61	0.00	0.00	7.99	-1.22
10 a	-2.57	-3.18	0.00	0.00	7.10	-1.07
10 b	-2.09	-1.25	0.00	0.00	3.71	-0.48
10 c	-1.62	0.35	0.00	0.00	0.73	-0.26
11 top	1.33	-3.33	0.00	0.00	2.90	-4.41
11 a	1.35	-2.92	0.00	0.00	2.51	-3.88
11 b	1.47	-1.10	0.00	0.00	1.03	-1.84
11 c	1.59	0.41	0.00	0.00	0.32	0.07

1_III_B_R1_EL.OUT 9/11/2009

VEH: R1 - TOLL ROAD BRUG(5.75.44) page 56
date 11/09/2009; time 13:25:59
Cline Avenue - Load Rating - Double Box - 4 Webs - 71.105' W

Summary of the results (Minimum)

Section	--- Deadload ----		----- P.T. ------		--- Live load ---	
	Moment	Ax.Frc	Moment	Ax.Frc	Moment	Ax.Frc
1 a	-3.62	0.35	0.00	0.00	-1.81	0.10
1 b	-7.11	0.78	0.00	0.00	-6.34	0.25
1 c	-11.91	1.48	0.00	0.00	-10.89	0.57
1 right	-13.26	1.69	0.00	0.00	-12.85	0.70
2 left	-6.63	2.28	0.00	0.00	-5.97	-0.19
2 a	-5.69	2.07	0.00	0.00	-5.27	-0.23
2 b	-0.81	0.90	0.00	0.00	-0.80	0.83
2 c	-0.16	0.67	0.00	0.00	-0.62	0.51
2 right	-4.78	1.22	0.00	0.00	-5.36	-0.45
3 left	-7.52	1.10	0.00	0.00	-9.21	0.35
3 a	-6.39	0.85	0.00	0.00	-8.14	0.27
3 b	0.13	-0.62	0.00	0.00	-2.68	-0.20
3 c	2.24	-1.25	0.00	0.00	-0.24	-0.20
3 right	-7.99	0.35	0.00	0.00	-9.07	0.29
4 left	-5.30	0.49	0.00	0.00	-5.37	-0.68
4 a	-4.42	0.32	0.00	0.00	-4.73	-0.71
4 b	0.00	-0.48	0.00	0.00	-0.95	0.40
4 c	0.45	-0.52	0.00	0.00	-0.66	0.28
4 right	-4.89	0.79	0.00	0.00	-5.94	-0.36
5 left	-6.22	0.83	0.00	0.00	-5.01	0.48
5 a	-5.21	0.66	0.00	0.00	-3.70	0.34
5 b	-2.44	0.25	0.00	0.00	-0.35	0.10
5 c	-0.60	0.05	0.00	0.00	-0.05	0.01
6 a	-0.90	-0.35	0.00	0.00	-0.46	0.28
6 b	-0.40	-0.01	0.00	0.00	-0.39	0.29
6 c	0.84	1.01	0.00	0.00	-0.07	0.98
7 a	-1.06	0.09	0.00	0.00	-0.79	0.77
7 b	-0.55	0.39	0.00	0.00	-0.67	0.76
7 c	0.81	1.26	0.00	0.00	-0.07	0.99
8 top	-6.63	-4.06	0.00	0.00	-10.56	-4.79
8 a	-6.14	-3.58	0.00	0.00	-9.26	-4.23
8 b	-4.06	-1.46	0.00	0.00	-4.54	-2.07
8 c	-2.01	0.29	0.00	0.00	-0.30	-0.54
9 top	2.74	-3.43	0.00	0.00	-7.84	-1.23
9 a	2.65	-3.00	0.00	0.00	-6.96	-1.08
9 b	2.26	-1.11	0.00	0.00	-3.64	-0.49
9 c	1.87	0.43	0.00	0.00	-0.72	-0.27
10 top	-2.69	-3.61	0.00	0.00	-7.00	-2.55
10 a	-2.57	-3.18	0.00	0.00	-6.14	-2.27
10 b	-2.09	-1.25	0.00	0.00	-3.06	-1.16
10 c	-1.62	0.35	0.00	0.00	-0.39	-0.21
11 top	1.33	-3.33	0.00	0.00	-5.15	-1.60
11 a	1.35	-2.92	0.00	0.00	-4.57	-1.44
11 b	1.47	-1.10	0.00	0.00	-2.44	-0.73
11 c	1.59	0.41	0.00	0.00	-0.66	-0.23

VEH: R2 - TOLL ROAD BRUG(5.75.44) page 55
date 11/09/2009; time 13:26:00
Cline Avenue - Load Rating - Double Box - 4 Webs - 71.105' W

Summary of the results (Maximum)

Section	Deadload Moment	Deadload Ax.Frc	P.T. Moment	P.T. Ax.Frc	Live load Moment	Live load Ax.Frc
1 a	-3.62	0.35	0.00	0.00	0.93	0.08
1 b	-7.11	0.78	0.00	0.00	0.72	0.18
1 c	-11.91	1.48	0.00	0.00	-0.01	0.01
1 right	-13.26	1.69	0.00	0.00	-0.01	0.01
2 left	-6.63	2.28	0.00	0.00	0.06	0.00
2 a	-5.69	2.07	0.00	0.00	0.55	1.15
2 b	-0.81	0.90	0.00	0.00	3.18	-0.01
2 c	-0.16	0.67	0.00	0.00	3.53	-0.35
2 right	-4.78	1.22	0.00	0.00	1.03	1.12
3 left	-7.52	1.10	0.00	0.00	3.51	0.23
3 a	-6.39	0.85	0.00	0.00	3.75	0.67
3 b	0.13	-0.62	0.00	0.00	4.21	0.14
3 c	2.24	-1.25	0.00	0.00	4.62	-0.14
3 right	-7.99	0.35	0.00	0.00	3.56	0.72
4 left	-5.30	0.49	0.00	0.00	1.04	1.01
4 a	-4.42	0.32	0.00	0.00	1.98	0.62
4 b	0.00	-0.48	0.00	0.00	3.51	-0.20
4 c	0.45	-0.52	0.00	0.00	3.54	-0.52
4 right	-4.89	0.79	0.00	0.00	0.08	0.01
5 left	-6.22	0.83	0.00	0.00	-0.01	0.01
5 a	-5.21	0.66	0.00	0.00	0.00	0.01
5 b	-2.44	0.25	0.00	0.00	0.66	0.05
5 c	-0.60	0.05	0.00	0.00	0.20	0.01
6 a	-0.90	-0.35	0.00	0.00	0.94	-0.98
6 b	-0.40	-0.01	0.00	0.00	0.79	-0.80
6 c	0.84	1.01	0.00	0.00	0.03	-0.02
7 a	-1.06	0.09	0.00	0.00	0.47	-0.58
7 b	-0.55	0.39	0.00	0.00	0.39	-0.48
7 c	0.81	1.26	0.00	0.00	0.03	-0.19
8 top	-6.63	-4.06	0.00	0.00	4.39	-1.40
8 a	-6.14	-3.58	0.00	0.00	3.89	-1.24
8 b	-4.06	-1.46	0.00	0.00	2.09	-0.60
8 c	-2.01	0.29	0.00	0.00	0.58	-0.19
9 top	2.74	-3.43	0.00	0.00	5.87	-2.20
9 a	2.65	-3.00	0.00	0.00	5.14	-1.94
9 b	2.26	-1.11	0.00	0.00	2.61	-0.63
9 c	1.87	0.43	0.00	0.00	0.27	0.17
10 top	-2.69	-3.61	0.00	0.00	7.19	-1.00
10 a	-2.57	-3.18	0.00	0.00	6.39	-0.87
10 b	-2.09	-1.25	0.00	0.00	3.35	-0.36
10 c	-1.62	0.35	0.00	0.00	0.66	-0.22
11 top	1.33	-3.33	0.00	0.00	2.67	-4.85
11 a	1.35	-2.92	0.00	0.00	2.29	-4.08
11 b	1.47	-1.10	0.00	0.00	0.93	-1.64
11 c	1.59	0.41	0.00	0.00	0.28	0.06

VEH: R2 - TOLL ROAD BRUG(5.75.44) page 56
date 11/09/2009; time 13:26:00
Cline Avenue - Load Rating - Double Box - 4 Webs - 71.105' W

Summary of the results (Minimum)

Section	Deadload Moment	Deadload Ax.Frc	P.T. Moment	P.T. Ax.Frc	Live load Moment	Live load Ax.Frc
1 a	-3.62	0.35	0.00	0.00	-1.07	0.08
1 b	-7.11	0.78	0.00	0.00	-5.35	0.17
1 c	-11.91	1.48	0.00	0.00	-8.80	0.44
1 right	-13.26	1.69	0.00	0.00	-10.79	0.61
2 left	-6.63	2.28	0.00	0.00	-5.02	-0.17
2 a	-5.69	2.07	0.00	0.00	-4.44	-0.20
2 b	-0.81	0.90	0.00	0.00	-0.55	0.68
2 c	-0.16	0.67	0.00	0.00	-0.49	0.41
2 right	-4.78	1.22	0.00	0.00	-4.37	-0.44
3 left	-7.52	1.10	0.00	0.00	-7.35	0.27
3 a	-6.39	0.85	0.00	0.00	-6.76	0.02
3 b	0.13	-0.62	0.00	0.00	-2.46	-0.17
3 c	2.24	-1.25	0.00	0.00	-0.21	-0.18
3 right	-7.99	0.35	0.00	0.00	-7.22	0.22
4 left	-5.30	0.49	0.00	0.00	-4.37	-0.64
4 a	-4.42	0.32	0.00	0.00	-3.85	-0.66
4 b	0.00	-0.48	0.00	0.00	-0.77	0.32
4 c	0.45	-0.52	0.00	0.00	-0.57	0.24
4 right	-4.89	0.79	0.00	0.00	-5.00	-0.31
5 left	-6.22	0.83	0.00	0.00	-4.54	0.48
5 a	-5.21	0.66	0.00	0.00	-3.22	0.29
5 b	-2.44	0.25	0.00	0.00	0.00	0.00
5 c	-0.60	0.05	0.00	0.00	-0.04	0.01
6 a	-0.90	-0.35	0.00	0.00	-0.41	0.26
6 b	-0.40	-0.01	0.00	0.00	-0.35	0.27
6 c	0.84	1.01	0.00	0.00	-0.06	0.81
7 a	-1.06	0.09	0.00	0.00	-0.74	0.72
7 b	-0.55	0.39	0.00	0.00	-0.63	0.70
7 c	0.81	1.26	0.00	0.00	-0.06	0.82
8 top	-6.63	-4.06	0.00	0.00	-9.10	-5.01
8 a	-6.14	-3.58	0.00	0.00	-7.92	-4.26
8 b	-4.06	-1.46	0.00	0.00	-3.88	-1.81
8 c	-2.01	0.29	0.00	0.00	-0.23	-0.46
9 top	2.74	-3.43	0.00	0.00	-7.05	-1.01
9 a	2.65	-3.00	0.00	0.00	-6.26	-0.88
9 b	2.26	-1.11	0.00	0.00	-3.29	-0.36
9 c	1.87	0.43	0.00	0.00	-0.65	-0.22
10 top	-2.69	-3.61	0.00	0.00	-5.75	-2.19
10 a	-2.57	-3.18	0.00	0.00	-5.03	-1.93
10 b	-2.09	-1.25	0.00	0.00	-2.55	-0.62
10 c	-1.62	0.35	0.00	0.00	-0.34	-0.16
11 top	1.33	-3.33	0.00	0.00	-4.38	-1.40
11 a	1.35	-2.92	0.00	0.00	-3.88	-1.24
11 b	1.47	-1.10	0.00	0.00	-2.09	-0.60
11 c	1.59	0.41	0.00	0.00	-0.59	-0.19

VEH: R3 - TOLL ROAD BRUG(5.75.44) page 55
date 11/09/2009; time 13:26:00
Cline Avenue - Load Rating - Double Box - 4 Webs - 71.105' W

Summary of the results (Maximum)

Section	Deadload Moment	Deadload Ax.Frc	P.T. Moment	P.T. Ax.Frc	Live load Moment	Live load Ax.Frc
1 a	-3.62	0.35	0.00	0.00	0.73	0.04
1 b	-7.11	0.78	0.00	0.00	0.48	0.15
1 c	-11.91	1.48	0.00	0.00	-0.01	0.02
1 right	-13.26	1.69	0.00	0.00	-0.01	0.03
2 left	-6.63	2.28	0.00	0.00	0.09	0.02
2 a	-5.69	2.07	0.00	0.00	0.26	1.11
2 b	-0.81	0.90	0.00	0.00	3.06	-0.06
2 c	-0.16	0.67	0.00	0.00	3.30	-0.45
2 right	-4.78	1.22	0.00	0.00	1.00	0.82
3 left	-7.52	1.10	0.00	0.00	4.38	0.29
3 a	-6.39	0.85	0.00	0.00	4.47	0.53
3 b	0.13	-0.62	0.00	0.00	4.48	0.02
3 c	2.24	-1.25	0.00	0.00	4.25	-0.15
3 right	-7.99	0.35	0.00	0.00	4.38	0.15
4 left	-5.30	0.49	0.00	0.00	1.01	0.70
4 a	-4.42	0.32	0.00	0.00	1.86	0.38
4 b	0.00	-0.48	0.00	0.00	3.49	-0.38
4 c	0.45	-0.52	0.00	0.00	3.32	-0.60
4 right	-4.89	0.79	0.00	0.00	0.10	0.01
5 left	-6.22	0.83	0.00	0.00	-0.01	0.02
5 a	-5.21	0.66	0.00	0.00	-0.01	0.02
5 b	-2.44	0.25	0.00	0.00	0.36	0.09
5 c	-0.60	0.05	0.00	0.00	0.16	0.01
6 a	-0.90	-0.35	0.00	0.00	1.02	-0.96
6 b	-0.40	-0.01	0.00	0.00	0.85	-0.76
6 c	0.84	1.01	0.00	0.00	0.03	-0.18
7 a	-1.06	0.09	0.00	0.00	0.47	-0.52
7 b	-0.55	0.39	0.00	0.00	0.38	-0.47
7 c	0.81	1.26	0.00	0.00	0.03	-0.19
8 top	-6.63	-4.06	0.00	0.00	4.39	-1.66
8 a	-6.14	-3.58	0.00	0.00	3.84	-1.49
8 b	-4.06	-1.46	0.00	0.00	2.00	-0.74
8 c	-2.01	0.29	0.00	0.00	0.57	-0.39
9 top	2.74	-3.43	0.00	0.00	5.78	-1.49
9 a	2.65	-3.00	0.00	0.00	5.09	-1.34
9 b	2.26	-1.11	0.00	0.00	2.56	-0.62
9 c	1.87	0.43	0.00	0.00	0.28	-0.09
10 top	-2.69	-3.61	0.00	0.00	8.12	-1.10
10 a	-2.57	-3.18	0.00	0.00	7.17	-0.97
10 b	-2.09	-1.25	0.00	0.00	3.68	-0.41
10 c	-1.62	0.35	0.00	0.00	0.68	-0.25
11 top	1.33	-3.33	0.00	0.00	2.79	-4.43
11 a	1.35	-2.92	0.00	0.00	2.41	-3.93
11 b	1.47	-1.10	0.00	0.00	0.96	-1.94
11 c	1.59	0.41	0.00	0.00	0.27	0.06

VEH: R3 - TOLL ROAD BRUG(5.75.44) page 56
date 11/09/2009; time 13:26:00
Cline Avenue - Load Rating - Double Box - 4 Webs - 71.105' W

Summary of the results (Minimum)

Section	Deadload Moment	Deadload Ax.Frc	P.T. Moment	P.T. Ax.Frc	Live load Moment	Live load Ax.Frc
1 a	-3.62	0.35	0.00	0.00	-1.24	0.03
1 b	-7.11	0.78	0.00	0.00	-5.20	0.11
1 c	-11.91	1.48	0.00	0.00	-8.92	0.36
1 right	-13.26	1.69	0.00	0.00	-10.66	0.48
2 left	-6.63	2.28	0.00	0.00	-5.43	-0.16
2 a	-5.69	2.07	0.00	0.00	-4.81	-0.21
2 b	-0.81	0.90	0.00	0.00	-0.29	0.58
2 c	-0.16	0.67	0.00	0.00	-0.44	0.13
2 right	-4.78	1.22	0.00	0.00	-4.42	-0.53
3 left	-7.52	1.10	0.00	0.00	-7.45	0.03
3 a	-6.39	0.85	0.00	0.00	-6.93	-0.01
3 b	0.13	-0.62	0.00	0.00	-2.93	-0.17
3 c	2.24	-1.25	0.00	0.00	-0.19	-0.15
3 right	-7.99	0.35	0.00	0.00	-7.28	0.01
4 left	-5.30	0.49	0.00	0.00	-4.40	-0.70
4 a	-4.42	0.32	0.00	0.00	-3.89	-0.72
4 b	0.00	-0.48	0.00	0.00	-0.70	0.31
4 c	0.45	-0.52	0.00	0.00	-0.55	0.21
4 right	-4.89	0.79	0.00	0.00	-5.41	-0.28
5 left	-6.22	0.83	0.00	0.00	-4.74	0.44
5 a	-5.21	0.66	0.00	0.00	-3.44	0.31
5 b	-2.44	0.25	0.00	0.00	-0.23	0.08
5 c	-0.60	0.05	0.00	0.00	-0.06	0.01
6 a	-0.90	-0.35	0.00	0.00	-0.40	0.29
6 b	-0.40	-0.01	0.00	0.00	-0.35	0.29
6 c	0.84	1.01	0.00	0.00	-0.06	0.82
7 a	-1.06	0.09	0.00	0.00	-0.82	0.83
7 b	-0.55	0.39	0.00	0.00	-0.71	0.79
7 c	0.81	1.26	0.00	0.00	-0.06	0.82
8 top	-6.63	-4.06	0.00	0.00	-9.05	-4.63
8 a	-6.14	-3.58	0.00	0.00	-7.83	-4.13
8 b	-4.06	-1.46	0.00	0.00	-3.66	-2.08
8 c	-2.01	0.29	0.00	0.00	-0.21	0.05
9 top	2.74	-3.43	0.00	0.00	-7.95	-1.12
9 a	2.65	-3.00	0.00	0.00	-7.02	-0.99
9 b	2.26	-1.11	0.00	0.00	-3.60	-0.42
9 c	1.87	0.43	0.00	0.00	-0.67	-0.26
10 top	-2.69	-3.61	0.00	0.00	-5.63	-1.47
10 a	-2.57	-3.18	0.00	0.00	-4.95	-1.33
10 b	-2.09	-1.25	0.00	0.00	-2.49	-0.61
10 c	-1.62	0.35	0.00	0.00	-0.32	-0.13
11 top	1.33	-3.33	0.00	0.00	-4.36	-1.66
11 a	1.35	-2.92	0.00	0.00	-3.82	-1.48
11 b	1.47	-1.10	0.00	0.00	-2.00	-0.74
11 c	1.59	0.41	0.00	0.00	-0.58	-0.40

VEH: R4 - MICHIGAN T BRUG(5.75.44) page 55
date 11/09/2009; time 13:26:01
Cline Avenue - Load Rating - Double Box - 4 Webs - 71.105' W

Summary of the results (Maximum)

Section	--- Deadload ----		----- P.T. ------		--- Live load ---	
	Moment	Ax.Frc	Moment	Ax.Frc	Moment	Ax.Frc
1 a	-3.62	0.35	0.00	0.00	0.57	0.08
1 b	-7.11	0.78	0.00	0.00	0.49	0.16
1 c	-11.91	1.48	0.00	0.00	0.21	0.39
1 right	-13.26	1.69	0.00	0.00	0.02	0.53
2 left	-6.63	2.28	0.00	0.00	0.42	1.50
2 a	-5.69	2.07	0.00	0.00	1.37	1.19
2 b	-0.81	0.90	0.00	0.00	3.21	-0.03
2 c	-0.16	0.67	0.00	0.00	3.47	-0.45
2 right	-4.78	1.22	0.00	0.00	2.46	0.94
3 left	-7.52	1.10	0.00	0.00	5.72	0.70
3 a	-6.39	0.85	0.00	0.00	5.75	0.56
3 b	0.13	-0.62	0.00	0.00	4.89	0.15
3 c	2.24	-1.25	0.00	0.00	4.30	-0.13
3 right	-7.99	0.35	0.00	0.00	5.93	0.52
4 left	-5.30	0.49	0.00	0.00	2.48	0.79
4 a	-4.42	0.32	0.00	0.00	3.13	0.42
4 b	0.00	-0.48	0.00	0.00	3.68	-0.33
4 c	0.45	-0.52	0.00	0.00	3.49	-0.66
4 right	-4.89	0.79	0.00	0.00	0.11	0.01
5 left	-6.22	0.83	0.00	0.00	0.02	0.34
5 a	-5.21	0.66	0.00	0.00	0.21	0.21
5 b	-2.44	0.25	0.00	0.00	0.48	0.03
5 c	-0.60	0.05	0.00	0.00	0.13	0.00
6 a	-0.90	-0.35	0.00	0.00	1.22	-1.16
6 b	-0.40	-0.01	0.00	0.00	1.05	-0.98
6 c	0.84	1.01	0.00	0.00	0.03	-0.20
7 a	-1.06	0.09	0.00	0.00	0.56	-0.61
7 b	-0.55	0.39	0.00	0.00	0.49	-0.51
7 c	0.81	1.26	0.00	0.00	0.04	-0.25
8 top	-6.63	-4.06	0.00	0.00	4.79	-0.91
8 a	-6.14	-3.58	0.00	0.00	4.30	-0.81
8 b	-4.06	-1.46	0.00	0.00	2.51	-0.55
8 c	-2.01	0.29	0.00	0.00	0.75	-0.18
9 top	2.74	-3.43	0.00	0.00	6.69	-1.20
9 a	2.65	-3.00	0.00	0.00	6.00	-1.09
9 b	2.26	-1.11	0.00	0.00	3.19	-0.61
9 c	1.87	0.43	0.00	0.00	0.32	-0.10
10 top	-2.69	-3.61	0.00	0.00	9.11	-0.62
10 a	-2.57	-3.18	0.00	0.00	8.16	-0.53
10 b	-2.09	-1.25	0.00	0.00	4.37	-0.18
10 c	-1.62	0.35	0.00	0.00	0.87	-0.15
11 top	1.33	-3.33	0.00	0.00	3.39	-3.74
11 a	1.35	-2.92	0.00	0.00	2.93	-3.15
11 b	1.47	-1.10	0.00	0.00	1.21	-1.32
11 c	1.59	0.41	0.00	0.00	0.36	0.08

VEH: R4 - MICHIGAN T BRUG(5.75.44) page 56
date 11/09/2009; time 13:26:01
Cline Avenue - Load Rating - Double Box - 4 Webs - 71.105' W

Summary of the results (Minimum)

Section	--- Deadload ----		----- P.T. ------		--- Live load ---	
	Moment	Ax.Frc	Moment	Ax.Frc	Moment	Ax.Frc
1 a	-3.62	0.35	0.00	0.00	-1.46	0.08
1 b	-7.11	0.78	0.00	0.00	-5.38	0.17
1 c	-11.91	1.48	0.00	0.00	-9.05	0.37
1 right	-13.26	1.69	0.00	0.00	-10.85	0.50
2 left	-6.63	2.28	0.00	0.00	-5.10	-0.23
2 a	-5.69	2.07	0.00	0.00	-4.37	-0.28
2 b	-0.81	0.90	0.00	0.00	-0.37	0.77
2 c	-0.16	0.67	0.00	0.00	-0.50	0.10
2 right	-4.78	1.22	0.00	0.00	-4.09	-0.64
3 left	-7.52	1.10	0.00	0.00	-8.02	-0.01
3 a	-6.39	0.85	0.00	0.00	-7.46	-0.04
3 b	0.13	-0.62	0.00	0.00	-3.26	-0.19
3 c	2.24	-1.25	0.00	0.00	-0.26	-0.22
3 right	-7.99	0.35	0.00	0.00	-7.82	-0.02
4 left	-5.30	0.49	0.00	0.00	-4.08	-0.89
4 a	-4.42	0.32	0.00	0.00	-3.41	-0.95
4 b	0.00	-0.48	0.00	0.00	-0.87	0.40
4 c	0.45	-0.52	0.00	0.00	-0.70	0.28
4 right	-4.89	0.79	0.00	0.00	-5.06	-0.39
5 left	-6.22	0.83	0.00	0.00	-3.91	0.32
5 a	-5.21	0.66	0.00	0.00	-2.83	0.19
5 b	-2.44	0.25	0.00	0.00	-0.11	0.03
5 c	-0.60	0.05	0.00	0.00	0.00	0.00
6 a	-0.90	-0.35	0.00	0.00	-0.53	0.36
6 b	-0.40	-0.01	0.00	0.00	-0.46	0.36
6 c	0.84	1.01	0.00	0.00	-0.08	0.91
7 a	-1.06	0.09	0.00	0.00	-1.01	0.98
7 b	-0.55	0.39	0.00	0.00	-0.87	0.93
7 c	0.81	1.26	0.00	0.00	-0.08	0.92
8 top	-6.63	-4.06	0.00	0.00	-10.43	-3.99
8 a	-6.14	-3.58	0.00	0.00	-9.20	-3.40
8 b	-4.06	-1.46	0.00	0.00	-4.63	-1.51
8 c	-2.01	0.29	0.00	0.00	-0.24	-0.45
9 top	2.74	-3.43	0.00	0.00	-8.90	-0.64
9 a	2.65	-3.00	0.00	0.00	-7.98	-0.54
9 b	2.26	-1.11	0.00	0.00	-4.28	-0.19
9 c	1.87	0.43	0.00	0.00	-0.87	-0.16
10 top	-2.69	-3.61	0.00	0.00	-6.51	-1.18
10 a	-2.57	-3.18	0.00	0.00	-5.85	-1.07
10 b	-2.09	-1.25	0.00	0.00	-3.10	-0.60
10 c	-1.62	0.35	0.00	0.00	-0.43	-0.17
11 top	1.33	-3.33	0.00	0.00	-4.76	-0.90
11 a	1.35	-2.92	0.00	0.00	-4.28	-0.81
11 b	1.47	-1.10	0.00	0.00	-2.50	-0.56
11 c	1.59	0.41	0.00	0.00	-0.76	-0.19

VEH: R5 - MICHIGAN T BRUG(5.75.44) page 55
date 11/09/2009; time 13:26:02
Cline Avenue - Load Rating - Double Box - 4 Webs - 71.105' W

Summary of the results (Maximum)

Section	--- Deadload ----		----- P.T. ------		--- Live load ---	
	Moment	Ax.Frc	Moment	Ax.Frc	Moment	Ax.Frc
1 a	-3.62	0.35	0.00	0.00	0.27	0.11
1 b	-7.11	0.78	0.00	0.00	0.13	0.27
1 c	-11.91	1.48	0.00	0.00	-0.01	0.01
1 right	-13.26	1.69	0.00	0.00	-0.01	0.02
2 left	-6.63	2.28	0.00	0.00	0.09	0.00
2 a	-5.69	2.07	0.00	0.00	0.43	1.45
2 b	-0.81	0.90	0.00	0.00	3.46	-0.21
2 c	-0.16	0.67	0.00	0.00	3.74	-0.51
2 right	-4.78	1.22	0.00	0.00	1.80	0.99
3 left	-7.52	1.10	0.00	0.00	5.23	0.80
3 a	-6.39	0.85	0.00	0.00	5.27	0.73
3 b	0.13	-0.62	0.00	0.00	5.00	0.18
3 c	2.24	-1.25	0.00	0.00	4.78	-0.19
3 right	-7.99	0.35	0.00	0.00	5.43	0.61
4 left	-5.30	0.49	0.00	0.00	1.82	0.83
4 a	-4.42	0.32	0.00	0.00	2.36	0.65
4 b	0.00	-0.48	0.00	0.00	3.89	-0.31
4 c	0.45	-0.52	0.00	0.00	3.76	-0.74
4 right	-4.89	0.79	0.00	0.00	0.12	0.01
5 left	-6.22	0.83	0.00	0.00	-0.01	0.02
5 a	-5.21	0.66	0.00	0.00	-0.01	0.02
5 b	-2.44	0.25	0.00	0.00	0.07	0.11
5 c	-0.60	0.05	0.00	0.00	0.05	0.02
6 a	-0.90	-0.35	0.00	0.00	1.33	-1.35
6 b	-0.40	-0.01	0.00	0.00	1.12	-1.11
6 c	0.84	1.01	0.00	0.00	0.04	-0.02
7 a	-1.06	0.09	0.00	0.00	0.65	-0.78
7 b	-0.55	0.39	0.00	0.00	0.54	-0.64
7 c	0.81	1.26	0.00	0.00	0.05	-0.26
8 top	-6.63	-4.06	0.00	0.00	5.94	-1.64
8 a	-6.14	-3.58	0.00	0.00	5.31	-1.49
8 b	-4.06	-1.46	0.00	0.00	2.89	-0.79
8 c	-2.01	0.29	0.00	0.00	0.81	-0.25
9 top	2.74	-3.43	0.00	0.00	7.84	-1.71
9 a	2.65	-3.00	0.00	0.00	6.98	-1.55
9 b	2.26	-1.11	0.00	0.00	3.61	-0.86
9 c	1.87	0.43	0.00	0.00	0.35	0.24
10 top	-2.69	-3.61	0.00	0.00	10.11	-1.04
10 a	-2.57	-3.18	0.00	0.00	9.03	-0.93
10 b	-2.09	-1.25	0.00	0.00	4.76	-0.43
10 c	-1.62	0.35	0.00	0.00	0.93	-0.24
11 top	1.33	-3.33	0.00	0.00	3.62	-3.47
11 a	1.35	-2.92	0.00	0.00	3.16	-3.15
11 b	1.47	-1.10	0.00	0.00	1.32	-1.75
11 c	1.59	0.41	0.00	0.00	0.38	0.09

VEH: R5 - MICHIGAN T BRUG(5.75.44) page 56
date 11/09/2009; time 13:26:02
Cline Avenue - Load Rating - Double Box - 4 Webs - 71.105' W

Summary of the results (Minimum)

Section	--- Deadload ----		----- P.T. ------		--- Live load ---	
	Moment	Ax.Frc	Moment	Ax.Frc	Moment	Ax.Frc
1 a	-3.62	0.35	0.00	0.00	-2.33	0.11
1 b	-7.11	0.78	0.00	0.00	-6.78	0.26
1 c	-11.91	1.48	0.00	0.00	-11.92	0.53
1 right	-13.26	1.69	0.00	0.00	-13.76	0.62
2 left	-6.63	2.28	0.00	0.00	-6.60	-0.24
2 a	-5.69	2.07	0.00	0.00	-5.80	-0.29
2 b	-0.81	0.90	0.00	0.00	-0.67	0.92
2 c	-0.16	0.67	0.00	0.00	-0.63	0.55
2 right	-4.78	1.22	0.00	0.00	-5.61	-0.65
3 left	-7.52	1.10	0.00	0.00	-9.97	0.06
3 a	-6.39	0.85	0.00	0.00	-9.22	0.02
3 b	0.13	-0.62	0.00	0.00	-3.50	-0.23
3 c	2.24	-1.25	0.00	0.00	-0.28	-0.24
3 right	-7.99	0.35	0.00	0.00	-9.77	0.04
4 left	-5.30	0.49	0.00	0.00	-5.61	-0.92
4 a	-4.42	0.32	0.00	0.00	-4.90	-0.94
4 b	0.00	-0.48	0.00	0.00	-1.05	0.44
4 c	0.45	-0.52	0.00	0.00	-0.78	0.33
4 right	-4.89	0.79	0.00	0.00	-6.56	-0.43
5 left	-6.22	0.83	0.00	0.00	-4.84	0.36
5 a	-5.21	0.66	0.00	0.00	-3.70	0.29
5 b	-2.44	0.25	0.00	0.00	-0.59	0.11
5 c	-0.60	0.05	0.00	0.00	-0.05	0.02
6 a	-0.90	-0.35	0.00	0.00	-0.58	0.37
6 b	-0.40	-0.01	0.00	0.00	-0.49	0.38
6 c	0.84	1.01	0.00	0.00	-0.09	1.13
7 a	-1.06	0.09	0.00	0.00	-1.05	1.04
7 b	-0.55	0.39	0.00	0.00	-0.90	1.00
7 c	0.81	1.26	0.00	0.00	-0.09	1.14
8 top	-6.63	-4.06	0.00	0.00	-12.16	-4.04
8 a	-6.14	-3.58	0.00	0.00	-10.77	-3.66
8 b	-4.06	-1.46	0.00	0.00	-5.34	-2.04
8 c	-2.01	0.29	0.00	0.00	-0.28	-0.59
9 top	2.74	-3.43	0.00	0.00	-9.90	-1.06
9 a	2.65	-3.00	0.00	0.00	-8.85	-0.94
9 b	2.26	-1.11	0.00	0.00	-4.66	-0.44
9 c	1.87	0.43	0.00	0.00	-0.92	-0.24
10 top	-2.69	-3.61	0.00	0.00	-7.66	-1.69
10 a	-2.57	-3.18	0.00	0.00	-6.82	-1.53
10 b	-2.09	-1.25	0.00	0.00	-3.53	-0.85
10 c	-1.62	0.35	0.00	0.00	-0.46	-0.22
11 top	1.33	-3.33	0.00	0.00	-5.91	-1.64
11 a	1.35	-2.92	0.00	0.00	-5.29	-1.48
11 b	1.47	-1.10	0.00	0.00	-2.88	-0.79
11 c	1.59	0.41	0.00	0.00	-0.82	-0.25

VEH: S1 - SPECIAL TR BRUG(5.75.44) page 55
date 11/09/2009; time 13:26:02
Cline Avenue - Load Rating - Double Box - 4 Webs - 71.105' W

Summary of the results (Maximum)

Section	--- Deadload ----		----- P.T. ------		--- Live load ---	
	Moment	Ax.Frc	Moment	Ax.Frc	Moment	Ax.Frc
1 a	-3.62	0.35	0.00	0.00	0.90	0.06
1 b	-7.11	0.78	0.00	0.00	0.58	0.20
1 c	-11.91	1.48	0.00	0.00	-0.01	0.05
1 right	-13.26	1.69	0.00	0.00	-0.02	0.06
2 left	-6.63	2.28	0.00	0.00	0.15	0.04
2 a	-5.69	2.07	0.00	0.00	0.44	1.48
2 b	-0.81	0.90	0.00	0.00	4.10	-0.10
2 c	-0.16	0.67	0.00	0.00	4.45	-0.68
2 right	-4.78	1.22	0.00	0.00	1.65	0.93
3 left	-7.52	1.10	0.00	0.00	6.75	0.41
3 a	-6.39	0.85	0.00	0.00	6.99	0.63
3 b	0.13	-0.62	0.00	0.00	6.40	-0.03
3 c	2.24	-1.25	0.00	0.00	5.62	-0.25
3 right	-7.99	0.35	0.00	0.00	6.95	0.61
4 left	-5.30	0.49	0.00	0.00	1.68	0.78
4 a	-4.42	0.32	0.00	0.00	2.76	0.35
4 b	0.00	-0.48	0.00	0.00	4.75	-0.60
4 c	0.45	-0.52	0.00	0.00	4.48	-0.87
4 right	-4.89	0.79	0.00	0.00	0.17	0.03
5 left	-6.22	0.83	0.00	0.00	-0.02	0.04
5 a	-5.21	0.66	0.00	0.00	-0.01	0.03
5 b	-2.44	0.25	0.00	0.00	0.44	0.12
5 c	-0.60	0.05	0.00	0.00	0.19	0.02
6 a	-0.90	-0.35	0.00	0.00	1.43	-1.30
6 b	-0.40	-0.01	0.00	0.00	1.20	-1.03
6 c	0.84	1.01	0.00	0.00	0.04	-0.27
7 a	-1.06	0.09	0.00	0.00	0.63	-0.76
7 b	-0.55	0.39	0.00	0.00	0.51	-0.60
7 c	0.81	1.26	0.00	0.00	0.05	-0.29
8 top	-6.63	-4.06	0.00	0.00	5.95	-2.19
8 a	-6.14	-3.58	0.00	0.00	5.23	-1.96
8 b	-4.06	-1.46	0.00	0.00	2.76	-0.99
8 c	-2.01	0.29	0.00	0.00	0.82	-0.53
9 top	2.74	-3.43	0.00	0.00	8.01	-1.99
9 a	2.65	-3.00	0.00	0.00	7.07	-1.54
9 b	2.26	-1.11	0.00	0.00	3.63	-0.85
9 c	1.87	0.43	0.00	0.00	0.44	-0.14
10 top	-2.69	-3.61	0.00	0.00	11.74	-1.31
10 a	-2.57	-3.18	0.00	0.00	10.39	-1.15
10 b	-2.09	-1.25	0.00	0.00	5.36	-0.48
10 c	-1.62	0.35	0.00	0.00	0.99	-0.31
11 top	1.33	-3.33	0.00	0.00	3.77	-5.65
11 a	1.35	-2.92	0.00	0.00	3.25	-5.03
11 b	1.47	-1.10	0.00	0.00	1.29	-2.52
11 c	1.59	0.41	0.00	0.00	0.38	0.09

VEH: S1 - SPECIAL TR BRUG(5.75.44) page 56
date 11/09/2009; time 13:26:02
Cline Avenue - Load Rating - Double Box - 4 Webs - 71.105' W

Summary of the results (Minimum)

Section	--- Deadload ----		----- P.T. ------		--- Live load ---	
	Moment	Ax.Frc	Moment	Ax.Frc	Moment	Ax.Frc
1 a	-3.62	0.35	0.00	0.00	-1.74	0.05
1 b	-7.11	0.78	0.00	0.00	-6.93	0.15
1 c	-11.91	1.48	0.00	0.00	-11.92	0.48
1 right	-13.26	1.69	0.00	0.00	-14.20	0.62
2 left	-6.63	2.28	0.00	0.00	-7.25	-0.24
2 a	-5.69	2.07	0.00	0.00	-6.42	-0.31
2 b	-0.81	0.90	0.00	0.00	-0.44	0.17
2 c	-0.16	0.67	0.00	0.00	-0.68	0.25
2 right	-4.78	1.22	0.00	0.00	-5.66	-0.83
3 left	-7.52	1.10	0.00	0.00	-10.24	0.01
3 a	-6.39	0.85	0.00	0.00	-9.56	-0.07
3 b	0.13	-0.62	0.00	0.00	-4.33	-0.26
3 c	2.24	-1.25	0.00	0.00	-0.27	-0.18
3 right	-7.99	0.35	0.00	0.00	-9.97	-0.02
4 left	-5.30	0.49	0.00	0.00	-5.63	-1.05
4 a	-4.42	0.32	0.00	0.00	-4.95	-1.07
4 b	0.00	-0.48	0.00	0.00	-1.03	0.39
4 c	0.45	-0.52	0.00	0.00	-0.77	0.29
4 right	-4.89	0.79	0.00	0.00	-7.23	-0.39
5 left	-6.22	0.83	0.00	0.00	-6.17	0.55
5 a	-5.21	0.66	0.00	0.00	-4.51	0.40
5 b	-2.44	0.25	0.00	0.00	-0.33	0.11
5 c	-0.60	0.05	0.00	0.00	-0.07	0.02
6 a	-0.90	-0.35	0.00	0.00	-0.53	0.21
6 b	-0.40	-0.01	0.00	0.00	-0.46	0.19
6 c	0.84	1.01	0.00	0.00	-0.09	1.13
7 a	-1.06	0.09	0.00	0.00	-1.17	1.20
7 b	-0.55	0.39	0.00	0.00	-1.01	1.15
7 c	0.81	1.26	0.00	0.00	-0.09	1.14
8 top	-6.63	-4.06	0.00	0.00	-12.19	-5.95
8 a	-6.14	-3.58	0.00	0.00	-10.58	-5.32
8 b	-4.06	-1.46	0.00	0.00	-4.98	-2.72
8 c	-2.01	0.29	0.00	0.00	-0.32	0.07
9 top	2.74	-3.43	0.00	0.00	-11.48	-1.34
9 a	2.65	-3.00	0.00	0.00	-10.16	-1.18
9 b	2.26	-1.11	0.00	0.00	-5.24	-0.49
9 c	1.87	0.43	0.00	0.00	-0.97	-0.31
10 top	-2.69	-3.61	0.00	0.00	-7.77	-1.96
10 a	-2.57	-3.18	0.00	0.00	-6.86	-1.52
10 b	-2.09	-1.25	0.00	0.00	-3.52	-0.83
10 c	-1.62	0.35	0.00	0.00	-0.48	-0.17
11 top	1.33	-3.33	0.00	0.00	-5.92	-2.18
11 a	1.35	-2.92	0.00	0.00	-5.20	-1.96
11 b	1.47	-1.10	0.00	0.00	-2.76	-0.99
11 c	1.59	0.41	0.00	0.00	-0.83	-0.53

VEH: S2 - SPECIAL TR BRUG(5.75.44) page 55
date 11/09/2009; time 13:26:03
Cline Avenue - Load Rating - Double Box - 4 Webs - 71.105' W

Summary of the results (Maximum)

Section	--- Deadload ----		----- P.T. ------		--- Live load ---	
	Moment	Ax.Frc	Moment	Ax.Frc	Moment	Ax.Frc
1 a	-3.62	0.35	0.00	0.00	0.74	0.07
1 b	-7.11	0.78	0.00	0.00	0.47	0.21
1 c	-11.91	1.48	0.00	0.00	-0.01	0.05
1 right	-13.26	1.69	0.00	0.00	-0.02	0.06
2 left	-6.63	2.28	0.00	0.00	0.15	0.04
2 a	-5.69	2.07	0.00	0.00	0.55	1.42
2 b	-0.81	0.90	0.00	0.00	3.88	-0.08
2 c	-0.16	0.67	0.00	0.00	4.26	-0.68
2 right	-4.78	1.22	0.00	0.00	1.83	0.86
3 left	-7.52	1.10	0.00	0.00	6.85	0.72
3 a	-6.39	0.85	0.00	0.00	7.02	0.57
3 b	0.13	-0.62	0.00	0.00	6.19	-0.03
3 c	2.24	-1.25	0.00	0.00	5.37	-0.27
3 right	-7.99	0.35	0.00	0.00	7.13	0.56
4 left	-5.30	0.49	0.00	0.00	1.86	0.70
4 a	-4.42	0.32	0.00	0.00	2.82	0.30
4 b	0.00	-0.48	0.00	0.00	4.52	-0.59
4 c	0.45	-0.52	0.00	0.00	4.29	-0.86
4 right	-4.89	0.79	0.00	0.00	0.16	0.03
5 left	-6.22	0.83	0.00	0.00	-0.02	0.04
5 a	-5.21	0.66	0.00	0.00	-0.01	0.03
5 b	-2.44	0.25	0.00	0.00	0.35	0.11
5 c	-0.60	0.05	0.00	0.00	0.15	0.02
6 a	-0.90	-0.35	0.00	0.00	1.41	-1.29
6 b	-0.40	-0.01	0.00	0.00	1.18	-1.03
6 c	0.84	1.01	0.00	0.00	0.04	-0.27
7 a	-1.06	0.09	0.00	0.00	0.62	-0.76
7 b	-0.55	0.39	0.00	0.00	0.51	-0.60
7 c	0.81	1.26	0.00	0.00	0.05	-0.29
8 top	-6.63	-4.06	0.00	0.00	5.81	-1.93
8 a	-6.14	-3.58	0.00	0.00	5.15	-1.73
8 b	-4.06	-1.46	0.00	0.00	2.76	-0.90
8 c	-2.01	0.29	0.00	0.00	0.81	-0.47
9 top	2.74	-3.43	0.00	0.00	7.95	-1.88
9 a	2.65	-3.00	0.00	0.00	7.04	-1.50
9 b	2.26	-1.11	0.00	0.00	3.62	-0.83
9 c	1.87	0.43	0.00	0.00	0.49	-0.18
10 top	-2.69	-3.61	0.00	0.00	11.54	-1.06
10 a	-2.57	-3.18	0.00	0.00	10.26	-0.94
10 b	-2.09	-1.25	0.00	0.00	5.33	-0.39
10 c	-1.62	0.35	0.00	0.00	0.98	-0.26
11 top	1.33	-3.33	0.00	0.00	3.65	-4.89
11 a	1.35	-2.92	0.00	0.00	3.16	-4.32
11 b	1.47	-1.10	0.00	0.00	1.27	-2.15
11 c	1.59	0.41	0.00	0.00	0.38	0.09

VEH: S2 - SPECIAL TR BRUG(5.75.44) page 56
date 11/09/2009; time 13:26:03
Cline Avenue - Load Rating - Double Box - 4 Webs - 71.105' W

Summary of the results (Minimum)

Section	--- Deadload ----		----- P.T. ------		--- Live load ---	
	Moment	Ax.Frc	Moment	Ax.Frc	Moment	Ax.Frc
1 a	-3.62	0.35	0.00	0.00	-1.81	0.06
1 b	-7.11	0.78	0.00	0.00	-6.74	0.17
1 c	-11.91	1.48	0.00	0.00	-11.57	0.46
1 right	-13.26	1.69	0.00	0.00	-13.69	0.60
2 left	-6.63	2.28	0.00	0.00	-6.91	-0.25
2 a	-5.69	2.07	0.00	0.00	-6.11	-0.31
2 b	-0.81	0.90	0.00	0.00	-0.44	0.18
2 c	-0.16	0.67	0.00	0.00	-0.68	0.25
2 right	-4.78	1.22	0.00	0.00	-5.35	-0.83
3 left	-7.52	1.10	0.00	0.00	-10.17	-0.04
3 a	-6.39	0.85	0.00	0.00	-9.53	-0.07
3 b	0.13	-0.62	0.00	0.00	-4.28	-0.26
3 c	2.24	-1.25	0.00	0.00	-0.26	-0.17
3 right	-7.99	0.35	0.00	0.00	-9.90	-0.05
4 left	-5.30	0.49	0.00	0.00	-5.32	-1.04
4 a	-4.42	0.32	0.00	0.00	-4.66	-1.06
4 b	0.00	-0.48	0.00	0.00	-1.02	0.38
4 c	0.45	-0.52	0.00	0.00	-0.76	0.28
4 right	-4.89	0.79	0.00	0.00	-6.89	-0.40
5 left	-6.22	0.83	0.00	0.00	-5.58	0.49
5 a	-5.21	0.66	0.00	0.00	-4.13	0.35
5 b	-2.44	0.25	0.00	0.00	-0.37	0.11
5 c	-0.60	0.05	0.00	0.00	-0.07	0.02
6 a	-0.90	-0.35	0.00	0.00	-0.52	0.20
6 b	-0.40	-0.01	0.00	0.00	-0.45	0.19
6 c	0.84	1.01	0.00	0.00	-0.09	1.15
7 a	-1.06	0.09	0.00	0.00	-1.15	1.19
7 b	-0.55	0.39	0.00	0.00	-0.99	1.14
7 c	0.81	1.26	0.00	0.00	-0.09	1.16
8 top	-6.63	-4.06	0.00	0.00	-11.91	-5.30
8 a	-6.14	-3.58	0.00	0.00	-10.40	-4.70
8 b	-4.06	-1.46	0.00	0.00	-4.95	-2.40
8 c	-2.01	0.29	0.00	0.00	-0.32	0.07
9 top	2.74	-3.43	0.00	0.00	-11.29	-1.09
9 a	2.65	-3.00	0.00	0.00	-10.03	-0.96
9 b	2.26	-1.11	0.00	0.00	-5.22	-0.40
9 c	1.87	0.43	0.00	0.00	-0.97	-0.26
10 top	-2.69	-3.61	0.00	0.00	-7.72	-1.85
10 a	-2.57	-3.18	0.00	0.00	-6.83	-1.47
10 b	-2.09	-1.25	0.00	0.00	-3.50	-0.82
10 c	-1.62	0.35	0.00	0.00	-0.47	-0.17
11 top	1.33	-3.33	0.00	0.00	-5.79	-1.92
11 a	1.35	-2.92	0.00	0.00	-5.13	-1.73
11 b	1.47	-1.10	0.00	0.00	-2.75	-0.90
11 c	1.59	0.41	0.00	0.00	-0.83	-0.48

VEH: S3 - SPECIAL TR BRUG(5.75.44) page 55
date 11/09/2009; time 13:26:04
Cline Avenue - Load Rating - Double Box - 4 Webs - 71.105' W

Summary of the results (Maximum)

Section	--- Deadload ----		----- P.T. ------		--- Live load ---	
	Moment	Ax.Frc	Moment	Ax.Frc	Moment	Ax.Frc
1 a	-3.62	0.35	0.00	0.00	0.68	0.12
1 b	-7.11	0.78	0.00	0.00	0.42	0.30
1 c	-11.91	1.48	0.00	0.00	-0.02	0.06
1 right	-13.26	1.69	0.00	0.00	-0.02	0.07
2 left	-6.63	2.28	0.00	0.00	0.18	0.04
2 a	-5.69	2.07	0.00	0.00	0.96	1.88
2 b	-0.81	0.90	0.00	0.00	4.89	-0.08
2 c	-0.16	0.67	0.00	0.00	5.36	-0.85
2 right	-4.78	1.22	0.00	0.00	2.88	0.97
3 left	-7.52	1.10	0.00	0.00	9.00	0.93
3 a	-6.39	0.85	0.00	0.00	9.07	0.77
3 b	0.13	-0.62	0.00	0.00	7.80	0.04
3 c	2.24	-1.25	0.00	0.00	6.71	-0.33
3 right	-7.99	0.35	0.00	0.00	9.35	0.69
4 left	-5.30	0.49	0.00	0.00	2.91	0.74
4 a	-4.42	0.32	0.00	0.00	3.88	0.47
4 b	0.00	-0.48	0.00	0.00	5.70	-0.70
4 c	0.45	-0.52	0.00	0.00	5.39	-1.12
4 right	-4.89	0.79	0.00	0.00	0.20	0.03
5 left	-6.22	0.83	0.00	0.00	-0.02	0.05
5 a	-5.21	0.66	0.00	0.00	-0.02	0.04
5 b	-2.44	0.25	0.00	0.00	0.31	0.13
5 c	-0.60	0.05	0.00	0.00	0.13	0.02
6 a	-0.90	-0.35	0.00	0.00	1.89	-1.77
6 b	-0.40	-0.01	0.00	0.00	1.60	-1.44
6 c	0.84	1.01	0.00	0.00	0.05	-0.34
7 a	-1.06	0.09	0.00	0.00	0.85	-1.05
7 b	-0.55	0.39	0.00	0.00	0.71	-0.86
7 c	0.81	1.26	0.00	0.00	0.06	-0.37
8 top	-6.63	-4.06	0.00	0.00	7.82	-2.30
8 a	-6.14	-3.58	0.00	0.00	6.97	-2.07
8 b	-4.06	-1.46	0.00	0.00	3.80	-1.08
8 c	-2.01	0.29	0.00	0.00	1.11	-0.57
9 top	2.74	-3.43	0.00	0.00	10.69	-2.32
9 a	2.65	-3.00	0.00	0.00	9.50	-2.11
9 b	2.26	-1.11	0.00	0.00	4.90	-1.06
9 c	1.87	0.43	0.00	0.00	0.55	-0.18
10 top	-2.69	-3.61	0.00	0.00	15.04	-1.22
10 a	-2.57	-3.18	0.00	0.00	13.42	-1.07
10 b	-2.09	-1.25	0.00	0.00	7.05	-0.44
10 c	-1.62	0.35	0.00	0.00	1.33	-0.30
11 top	1.33	-3.33	0.00	0.00	4.97	-5.48
11 a	1.35	-2.92	0.00	0.00	4.32	-4.86
11 b	1.47	-1.10	0.00	0.00	1.76	-2.48
11 c	1.59	0.41	0.00	0.00	0.51	0.12

VEH: S3 - SPECIAL TR BRUG(5.75.44) page 56
date 11/09/2009; time 13:26:04
Cline Avenue - Load Rating - Double Box - 4 Webs - 71.105' W

Summary of the results (Minimum)

Section	--- Deadload ----		----- P.T. ------		--- Live load ---	
	Moment	Ax.Frc	Moment	Ax.Frc	Moment	Ax.Frc
1 a	-3.62	0.35	0.00	0.00	-2.70	0.11
1 b	-7.11	0.78	0.00	0.00	-8.86	0.27
1 c	-11.91	1.48	0.00	0.00	-15.34	0.62
1 right	-13.26	1.69	0.00	0.00	-17.95	0.77
2 left	-6.63	2.28	0.00	0.00	-8.87	-0.35
2 a	-5.69	2.07	0.00	0.00	-7.82	-0.42
2 b	-0.81	0.90	0.00	0.00	-0.57	1.10
2 c	-0.16	0.67	0.00	0.00	-0.86	0.28
2 right	-4.78	1.22	0.00	0.00	-6.98	-1.07
3 left	-7.52	1.10	0.00	0.00	-13.47	-0.04
3 a	-6.39	0.85	0.00	0.00	-12.60	-0.09
3 b	0.13	-0.62	0.00	0.00	-5.51	-0.34
3 c	2.24	-1.25	0.00	0.00	-0.37	-0.26
3 right	-7.99	0.35	0.00	0.00	-13.13	-0.06
4 left	-5.30	0.49	0.00	0.00	-6.94	-1.38
4 a	-4.42	0.32	0.00	0.00	-6.06	-1.39
4 b	0.00	-0.48	0.00	0.00	-1.37	0.58
4 c	0.45	-0.52	0.00	0.00	-1.05	0.40
4 right	-4.89	0.79	0.00	0.00	-8.84	-0.57
5 left	-6.22	0.83	0.00	0.00	-6.75	0.55
5 a	-5.21	0.66	0.00	0.00	-5.06	0.40
5 b	-2.44	0.25	0.00	0.00	-0.59	0.13
5 c	-0.60	0.05	0.00	0.00	-0.08	0.02
6 a	-0.90	-0.35	0.00	0.00	-0.74	0.52
6 b	-0.40	-0.01	0.00	0.00	-0.64	0.54
6 c	0.84	1.01	0.00	0.00	-0.12	1.54
7 a	-1.06	0.09	0.00	0.00	-1.54	1.56
7 b	-0.55	0.39	0.00	0.00	-1.33	1.50
7 c	0.81	1.26	0.00	0.00	-0.12	1.56
8 top	-6.63	-4.06	0.00	0.00	-16.08	-6.09
8 a	-6.14	-3.58	0.00	0.00	-14.15	-5.43
8 b	-4.06	-1.46	0.00	0.00	-6.89	-2.84
8 c	-2.01	0.29	0.00	0.00	-0.40	0.09
9 top	2.74	-3.43	0.00	0.00	-14.71	-1.25
9 a	2.65	-3.00	0.00	0.00	-13.13	-1.10
9 b	2.26	-1.11	0.00	0.00	-6.89	-0.46
9 c	1.87	0.43	0.00	0.00	-1.31	-0.30
10 top	-2.69	-3.61	0.00	0.00	-10.39	-2.29
10 a	-2.57	-3.18	0.00	0.00	-9.23	-2.08
10 b	-2.09	-1.25	0.00	0.00	-4.76	-1.04
10 c	-1.62	0.35	0.00	0.00	-0.62	-0.24
11 top	1.33	-3.33	0.00	0.00	-7.78	-2.29
11 a	1.35	-2.92	0.00	0.00	-6.94	-2.06
11 b	1.47	-1.10	0.00	0.00	-3.79	-1.09
11 c	1.59	0.41	0.00	0.00	-1.13	-0.58

VEH: S4 - SUPER LOAD BRUG(5.75.44) page 55
date 11/09/2009; time 13:26:04
Cline Avenue - Load Rating - Double Box - 4 Webs - 71.105' W

Summary of the results (Maximum)

Section	Deadload Moment	Deadload Ax.Frc	P.T. Moment	P.T. Ax.Frc	Live load Moment	Live load Ax.Frc
1 a	-3.62	0.35	0.00	0.00	0.45	0.06
1 b	-7.11	0.78	0.00	0.00	0.31	0.15
1 c	-11.91	1.48	0.00	0.00	-0.01	0.06
1 right	-13.26	1.69	0.00	0.00	-0.02	0.07
2 left	-6.63	2.28	0.00	0.00	0.15	0.05
2 a	-5.69	2.07	0.00	0.00	1.05	1.25
2 b	-0.81	0.90	0.00	0.00	3.39	-0.09
2 c	-0.16	0.67	0.00	0.00	3.63	-0.66
2 right	-4.78	1.22	0.00	0.00	2.62	0.45
3 left	-7.52	1.10	0.00	0.00	7.58	0.50
3 a	-6.39	0.85	0.00	0.00	7.57	0.40
3 b	0.13	-0.62	0.00	0.00	5.88	-0.05
3 c	2.24	-1.25	0.00	0.00	4.38	-0.23
3 right	-7.99	0.35	0.00	0.00	7.87	0.34
4 left	-5.30	0.49	0.00	0.00	2.65	0.29
4 a	-4.42	0.32	0.00	0.00	3.26	0.10
4 b	0.00	-0.48	0.00	0.00	4.04	-0.62
4 c	0.45	-0.52	0.00	0.00	3.66	-0.84
4 right	-4.89	0.79	0.00	0.00	0.17	0.03
5 left	-6.22	0.83	0.00	0.00	-0.02	0.04
5 a	-5.21	0.66	0.00	0.00	-0.01	0.03
5 b	-2.44	0.25	0.00	0.00	0.25	0.07
5 c	-0.60	0.05	0.00	0.00	0.10	0.01
6 a	-0.90	-0.35	0.00	0.00	1.40	-1.22
6 b	-0.40	-0.01	0.00	0.00	1.19	-1.00
6 c	0.84	1.01	0.00	0.00	0.04	-0.28
7 a	-1.06	0.09	0.00	0.00	0.59	-0.65
7 b	-0.55	0.39	0.00	0.00	0.50	-0.54
7 c	0.81	1.26	0.00	0.00	0.05	-0.30
8 top	-6.63	-4.06	0.00	0.00	5.33	-1.59
8 a	-6.14	-3.58	0.00	0.00	4.61	-1.00
8 b	-4.06	-1.46	0.00	0.00	2.63	-0.73
8 c	-2.01	0.29	0.00	0.00	0.82	-0.41
9 top	2.74	-3.43	0.00	0.00	7.59	-1.36
9 a	2.65	-3.00	0.00	0.00	6.79	-1.23
9 b	2.26	-1.11	0.00	0.00	3.53	-0.71
9 c	1.87	0.43	0.00	0.00	0.51	-0.18
10 top	-2.69	-3.61	0.00	0.00	11.29	-0.68
10 a	-2.57	-3.18	0.00	0.00	10.08	-0.59
10 b	-2.09	-1.25	0.00	0.00	5.32	-0.20
10 c	-1.62	0.35	0.00	0.00	1.00	-0.18
11 top	1.33	-3.33	0.00	0.00	3.64	-3.78
11 a	1.35	-2.92	0.00	0.00	3.16	-3.39
11 b	1.47	-1.10	0.00	0.00	1.27	-1.74
11 c	1.59	0.41	0.00	0.00	0.38	0.09

VEH: S4 - SUPER LOAD BRUG(5.75.44) page 56
date 11/09/2009; time 13:26:04
Cline Avenue - Load Rating - Double Box - 4 Webs - 71.105' W

Summary of the results (Minimum)

Section	Deadload Moment	Deadload Ax.Frc	P.T. Moment	P.T. Ax.Frc	Live load Moment	Live load Ax.Frc
1 a	-3.62	0.35	0.00	0.00	-1.74	0.05
1 b	-7.11	0.78	0.00	0.00	-5.73	0.13
1 c	-11.91	1.48	0.00	0.00	-9.96	0.35
1 right	-13.26	1.69	0.00	0.00	-11.69	0.44
2 left	-6.63	2.28	0.00	0.00	-5.91	-0.26
2 a	-5.69	2.07	0.00	0.00	-5.19	-0.32
2 b	-0.81	0.90	0.00	0.00	-0.45	0.19
2 c	-0.16	0.67	0.00	0.00	-0.70	0.27
2 right	-4.78	1.22	0.00	0.00	-4.28	-0.87
3 left	-7.52	1.10	0.00	0.00	-9.24	-0.04
3 a	-6.39	0.85	0.00	0.00	-8.61	-0.07
3 b	0.13	-0.62	0.00	0.00	-4.34	-0.24
3 c	2.24	-1.25	0.00	0.00	-0.26	-0.16
3 right	-7.99	0.35	0.00	0.00	-8.96	-0.06
4 left	-5.30	0.49	0.00	0.00	-4.25	-1.08
4 a	-4.42	0.32	0.00	0.00	-3.68	-1.08
4 b	0.00	-0.48	0.00	0.00	-1.03	0.39
4 c	0.45	-0.52	0.00	0.00	-0.78	0.28
4 right	-4.89	0.79	0.00	0.00	-5.89	-0.40
5 left	-6.22	0.83	0.00	0.00	-4.48	0.33
5 a	-5.21	0.66	0.00	0.00	-3.32	0.24
5 b	-2.44	0.25	0.00	0.00	-0.35	0.07
5 c	-0.60	0.05	0.00	0.00	-0.03	0.01
6 a	-0.90	-0.35	0.00	0.00	-0.53	0.22
6 b	-0.40	-0.01	0.00	0.00	-0.45	0.20
6 c	0.84	1.01	0.00	0.00	-0.09	1.03
7 a	-1.06	0.09	0.00	0.00	-1.18	1.20
7 b	-0.55	0.39	0.00	0.00	-1.02	1.14
7 c	0.81	1.26	0.00	0.00	-0.09	1.04
8 top	-6.63	-4.06	0.00	0.00	-11.01	-4.06
8 a	-6.14	-3.58	0.00	0.00	-9.69	-3.65
8 b	-4.06	-1.46	0.00	0.00	-4.71	-1.92
8 c	-2.01	0.29	0.00	0.00	-0.33	0.07
9 top	2.74	-3.43	0.00	0.00	-11.03	-0.71
9 a	2.65	-3.00	0.00	0.00	-9.85	-0.61
9 b	2.26	-1.11	0.00	0.00	-5.19	-0.21
9 c	1.87	0.43	0.00	0.00	-0.99	-0.19
10 top	-2.69	-3.61	0.00	0.00	-7.35	-1.33
10 a	-2.57	-3.18	0.00	0.00	-6.56	-1.21
10 b	-2.09	-1.25	0.00	0.00	-3.42	-0.69
10 c	-1.62	0.35	0.00	0.00	-0.49	-0.17
11 top	1.33	-3.33	0.00	0.00	-5.30	-1.59
11 a	1.35	-2.92	0.00	0.00	-4.59	-1.01
11 b	1.47	-1.10	0.00	0.00	-2.63	-0.73
11 c	1.59	0.41	0.00	0.00	-0.84	-0.41

VEH: S5 - SUPERLOAD BRUG(5.75.44) page 55
date 11/09/2009; time 13:26:05
Cline Avenue - Load Rating - Double Box - 4 Webs - 71.105' W

Summary of the results (Maximum)

Section	--- Deadload ---- Moment	Ax.Frc	----- P.T. ------ Moment	Ax.Frc	--- Live load --- Moment	Ax.Frc
1 a	-3.62	0.35	0.00	0.00	0.81	0.08
1 b	-7.11	0.78	0.00	0.00	0.51	0.24
1 c	-11.91	1.48	0.00	0.00	-0.02	0.08
1 right	-13.26	1.69	0.00	0.00	-0.02	0.09
2 left	-6.63	2.28	0.00	0.00	0.20	0.07
2 a	-5.69	2.07	0.00	0.00	0.86	1.68
2 b	-0.81	0.90	0.00	0.00	4.65	-0.12
2 c	-0.16	0.67	0.00	0.00	5.09	-0.88
2 right	-4.78	1.22	0.00	0.00	2.65	0.63
3 left	-7.52	1.10	0.00	0.00	9.26	0.76
3 a	-6.39	0.85	0.00	0.00	9.38	0.60
3 b	0.13	-0.62	0.00	0.00	7.78	-0.10
3 c	2.24	-1.25	0.00	0.00	6.30	-0.35
3 right	-7.99	0.35	0.00	0.00	9.62	0.56
4 left	-5.30	0.49	0.00	0.00	2.69	0.44
4 a	-4.42	0.32	0.00	0.00	3.74	0.20
4 b	0.00	-0.48	0.00	0.00	5.49	-0.81
4 c	0.45	-0.52	0.00	0.00	5.12	-1.10
4 right	-4.89	0.79	0.00	0.00	0.22	0.04
5 left	-6.22	0.83	0.00	0.00	-0.02	0.05
5 a	-5.21	0.66	0.00	0.00	-0.02	0.04
5 b	-2.44	0.25	0.00	0.00	0.38	0.12
5 c	-0.60	0.05	0.00	0.00	0.16	0.02
6 a	-0.90	-0.35	0.00	0.00	1.76	-1.57
6 b	-0.40	-0.01	0.00	0.00	1.49	-1.26
6 c	0.84	1.01	0.00	0.00	0.05	-0.36
7 a	-1.06	0.09	0.00	0.00	0.75	-0.87
7 b	-0.55	0.39	0.00	0.00	0.62	-0.71
7 c	0.81	1.26	0.00	0.00	0.06	-0.38
8 top	-6.63	-4.06	0.00	0.00	7.02	-2.27
8 a	-6.14	-3.58	0.00	0.00	6.23	-2.04
8 b	-4.06	-1.46	0.00	0.00	3.37	-1.06
8 c	-2.01	0.29	0.00	0.00	1.02	-0.56
9 top	2.74	-3.43	0.00	0.00	9.87	-1.97
9 a	2.65	-3.00	0.00	0.00	8.78	-1.79
9 b	2.26	-1.11	0.00	0.00	4.50	-1.03
9 c	1.87	0.43	0.00	0.00	0.63	-0.23
10 top	-2.69	-3.61	0.00	0.00	14.62	-1.12
10 a	-2.57	-3.18	0.00	0.00	13.02	-0.98
10 b	-2.09	-1.25	0.00	0.00	6.80	-0.38
10 c	-1.62	0.35	0.00	0.00	1.25	-0.28
11 top	1.33	-3.33	0.00	0.00	4.52	-5.62
11 a	1.35	-2.92	0.00	0.00	3.91	-4.98
11 b	1.47	-1.10	0.00	0.00	1.56	-2.50
11 c	1.59	0.41	0.00	0.00	0.47	0.11

VEH: S5 - SUPERLOAD BRUG(5.75.44) page 56
date 11/09/2009; time 13:26:05
Cline Avenue - Load Rating - Double Box - 4 Webs - 71.105' W

Summary of the results (Minimum)

Section	--- Deadload ---- Moment	Ax.Frc	----- P.T. ------ Moment	Ax.Frc	--- Live load --- Moment	Ax.Frc
1 a	-3.62	0.35	0.00	0.00	-2.22	0.07
1 b	-7.11	0.78	0.00	0.00	-7.97	0.20
1 c	-11.91	1.48	0.00	0.00	-13.74	0.52
1 right	-13.26	1.69	0.00	0.00	-16.20	0.67
2 left	-6.63	2.28	0.00	0.00	-8.24	-0.33
2 a	-5.69	2.07	0.00	0.00	-7.28	-0.40
2 b	-0.81	0.90	0.00	0.00	-0.58	0.26
2 c	-0.16	0.67	0.00	0.00	-0.90	0.36
2 right	-4.78	1.22	0.00	0.00	-6.15	-1.10
3 left	-7.52	1.10	0.00	0.00	-12.52	-0.06
3 a	-6.39	0.85	0.00	0.00	-11.72	-0.10
3 b	0.13	-0.62	0.00	0.00	-5.53	-0.33
3 c	2.24	-1.25	0.00	0.00	-0.33	-0.17
3 right	-7.99	0.35	0.00	0.00	-12.16	-0.09
4 left	-5.30	0.49	0.00	0.00	-6.10	-1.35
4 a	-4.42	0.32	0.00	0.00	-5.32	-1.36
4 b	0.00	-0.48	0.00	0.00	-1.31	0.49
4 c	0.45	-0.52	0.00	0.00	-0.98	0.36
4 right	-4.89	0.79	0.00	0.00	-8.22	-0.50
5 left	-6.22	0.83	0.00	0.00	-6.51	0.55
5 a	-5.21	0.66	0.00	0.00	-4.82	0.40
5 b	-2.44	0.25	0.00	0.00	-0.47	0.12
5 c	-0.60	0.05	0.00	0.00	-0.08	0.02
6 a	-0.90	-0.35	0.00	0.00	-0.64	0.26
6 b	-0.40	-0.01	0.00	0.00	-0.56	0.24
6 c	0.84	1.01	0.00	0.00	-0.11	1.41
7 a	-1.06	0.09	0.00	0.00	-1.46	1.52
7 b	-0.55	0.39	0.00	0.00	-1.27	1.45
7 c	0.81	1.26	0.00	0.00	-0.12	1.42
8 top	-6.63	-4.06	0.00	0.00	-14.41	-6.09
8 a	-6.14	-3.58	0.00	0.00	-12.59	-5.43
8 b	-4.06	-1.46	0.00	0.00	-6.01	-2.80
8 c	-2.01	0.29	0.00	0.00	-0.42	0.09
9 top	2.74	-3.43	0.00	0.00	-14.30	-1.15
9 a	2.65	-3.00	0.00	0.00	-12.72	-1.01
9 b	2.26	-1.11	0.00	0.00	-6.64	-0.40
9 c	1.87	0.43	0.00	0.00	-1.23	-0.29
10 top	-2.69	-3.61	0.00	0.00	-9.56	-1.94
10 a	-2.57	-3.18	0.00	0.00	-8.50	-1.76
10 b	-2.09	-1.25	0.00	0.00	-4.35	-1.01
10 c	-1.62	0.35	0.00	0.00	-0.61	-0.22
11 top	1.33	-3.33	0.00	0.00	-6.99	-2.27
11 a	1.35	-2.92	0.00	0.00	-6.21	-2.04
11 b	1.47	-1.10	0.00	0.00	-3.37	-1.06
11 c	1.59	0.41	0.00	0.00	-1.04	-0.57

PtBridge, Inc. BRUG(5.75.44) page 55
date 11/09/2009; time 13:26:06
Cline Avenue - Load Rating - Double Box - 4 Webs - 71.105' W

Summary of the results (Maximum)

Section	--- Deadload ---- Moment	Ax.Frc	----- P.T. ------ Moment	Ax.Frc	--- Live load --- Moment	Ax.Frc
1 a	-3.62	0.35	0.00	0.00	1.55	0.05
1 b	-7.11	0.78	0.00	0.00	1.30	0.12
1 c	-11.91	1.48	0.00	0.00	0.75	0.25
1 right	-13.26	1.69	0.00	0.00	0.45	0.40
2 left	-6.63	2.28	0.00	0.00	1.06	0.39
2 a	-5.69	2.07	0.00	0.00	1.66	0.41
2 b	-0.81	0.90	0.00	0.00	4.47	-0.27
2 c	-0.16	0.67	0.00	0.00	4.99	-0.43
2 right	-4.78	1.22	0.00	0.00	1.90	0.55
3 left	-7.52	1.10	0.00	0.00	4.47	1.37
3 a	-6.39	0.85	0.00	0.00	5.69	1.01
3 b	0.13	-0.62	0.00	0.00	6.11	0.17
3 c	2.24	-1.25	0.00	0.00	7.85	-0.26
3 right	-7.99	0.35	0.00	0.00	4.93	1.02
4 left	-5.30	0.49	0.00	0.00	1.37	0.56
4 a	-4.42	0.32	0.00	0.00	2.20	0.52
4 b	0.00	-0.48	0.00	0.00	4.74	-0.33
4 c	0.45	-0.52	0.00	0.00	5.01	-0.77
4 right	-4.89	0.79	0.00	0.00	1.08	0.34
5 left	-6.22	0.83	0.00	0.00	0.45	0.30
5 a	-5.21	0.66	0.00	0.00	0.77	0.16
5 b	-2.44	0.25	0.00	0.00	1.21	0.02
5 c	-0.60	0.05	0.00	0.00	0.36	0.00
6 a	-0.90	-0.35	0.00	0.00	1.09	-0.68
6 b	-0.40	-0.01	0.00	0.00	0.91	-0.40
6 c	0.84	1.01	0.00	0.00	0.06	-0.30
7 a	-1.06	0.09	0.00	0.00	0.78	-0.85
7 b	-0.55	0.39	0.00	0.00	0.63	-0.65
7 c	0.81	1.26	0.00	0.00	0.05	-0.27
8 top	-6.63	-4.06	0.00	0.00	6.25	-5.23
8 a	-6.14	-3.58	0.00	0.00	5.36	-4.46
8 b	-4.06	-1.46	0.00	0.00	2.71	-1.46
8 c	-2.01	0.29	0.00	0.00	0.72	-0.48
9 top	2.74	-3.43	0.00	0.00	10.33	-4.90
9 a	2.65	-3.00	0.00	0.00	8.93	-4.26
9 b	2.26	-1.11	0.00	0.00	4.39	-1.65
9 c	1.87	0.43	0.00	0.00	0.57	-0.04
10 top	-2.69	-3.61	0.00	0.00	10.98	-4.79
10 a	-2.57	-3.18	0.00	0.00	9.59	-4.02
10 b	-2.09	-1.25	0.00	0.00	4.82	-1.48
10 c	-1.62	0.35	0.00	0.00	0.83	-0.41
11 top	1.33	-3.33	0.00	0.00	3.94	-3.87
11 a	1.35	-2.92	0.00	0.00	3.22	-3.28
11 b	1.47	-1.10	0.00	0.00	1.38	-1.34
11 c	1.59	0.41	0.00	0.00	0.45	0.10

PtBridge, Inc. BRUG(5.75.44) page 56
date 11/09/2009; time 13:26:06
Cline Avenue - Load Rating - Double Box - 4 Webs - 71.105' W

Summary of the results (Minimum)

Section	--- Deadload ---- Moment	Ax.Frc	----- P.T. ------ Moment	Ax.Frc	--- Live load --- Moment	Ax.Frc
1 a	-3.62	0.35	0.00	0.00	-1.20	0.09
1 b	-7.11	0.78	0.00	0.00	-6.82	0.27
1 c	-11.91	1.48	0.00	0.00	-11.35	0.83
1 right	-13.26	1.69	0.00	0.00	-13.93	1.38
2 left	-6.63	2.28	0.00	0.00	-9.55	1.36
2 a	-5.69	2.07	0.00	0.00	-7.05	-0.23
2 b	-0.81	0.90	0.00	0.00	-1.61	0.27
2 c	-0.16	0.67	0.00	0.00	-1.09	0.66
2 right	-4.78	1.22	0.00	0.00	-7.74	0.49
3 left	-7.52	1.10	0.00	0.00	-14.21	0.34
3 a	-6.39	0.85	0.00	0.00	-12.78	0.12
3 b	0.13	-0.62	0.00	0.00	-4.70	-0.31
3 c	2.24	-1.25	0.00	0.00	-0.38	-0.21
3 right	-7.99	0.35	0.00	0.00	-13.98	0.31
4 left	-5.30	0.49	0.00	0.00	-7.49	-0.62
4 a	-4.42	0.32	0.00	0.00	-6.29	-0.83
4 b	0.00	-0.48	0.00	0.00	-1.37	-0.26
4 c	0.45	-0.52	0.00	0.00	-0.92	0.41
4 right	-4.89	0.79	0.00	0.00	-9.19	0.84
5 left	-6.22	0.83	0.00	0.00	-7.28	1.00
5 a	-5.21	0.66	0.00	0.00	-5.06	0.66
5 b	-2.44	0.25	0.00	0.00	-0.63	0.14
5 c	-0.60	0.05	0.00	0.00	-0.08	0.02
6 a	-0.90	-0.35	0.00	0.00	-0.66	0.32
6 b	-0.40	-0.01	0.00	0.00	-0.56	0.32
6 c	0.84	1.01	0.00	0.00	-0.08	1.33
7 a	-1.06	0.09	0.00	0.00	-0.80	1.09
7 b	-0.55	0.39	0.00	0.00	-0.68	1.10
7 c	0.81	1.26	0.00	0.00	-0.08	1.34
8 top	-6.63	-4.06	0.00	0.00	-9.42	-7.01
8 a	-6.14	-3.58	0.00	0.00	-8.07	-5.96
8 b	-4.06	-1.46	0.00	0.00	-3.89	-2.44
8 c	-2.01	0.29	0.00	0.00	-0.57	-0.21
9 top	2.74	-3.43	0.00	0.00	-10.76	-4.57
9 a	2.65	-3.00	0.00	0.00	-9.39	-3.84
9 b	2.26	-1.11	0.00	0.00	-4.71	-1.42
9 c	1.87	0.43	0.00	0.00	-0.82	-0.41
10 top	-2.69	-3.61	0.00	0.00	-10.13	-4.87
10 a	-2.57	-3.18	0.00	0.00	-8.75	-4.25
10 b	-2.09	-1.25	0.00	0.00	-4.29	-1.64
10 c	-1.62	0.35	0.00	0.00	-0.51	-0.26
11 top	1.33	-3.33	0.00	0.00	-6.30	-5.21
11 a	1.35	-2.92	0.00	0.00	-5.36	-4.44
11 b	1.47	-1.10	0.00	0.00	-2.70	-1.47
11 c	1.59	0.41	0.00	0.00	-0.73	-0.49

VEH: HL93- TANDEM BRUG(5.75.44) page 55
date 11/09/2009; time 13:26:05
Cline Avenue - Load Rating - Double Box - 4 Webs - 71.105' W

Summary of the results (Maximum)

Section	--- Deadload ----		----- P.T. ------		--- Live load ---	
	Moment	Ax.Frc	Moment	Ax.Frc	Moment	Ax.Frc
1 a	-3.62	0.35	0.00	0.00	1.14	0.09
1 b	-7.11	0.78	0.00	0.00	0.71	0.28
1 c	-11.91	1.48	0.00	0.00	0.23	0.05
1 right	-13.26	1.69	0.00	0.00	0.30	0.06
2 left	-6.63	2.28	0.00	0.00	0.35	0.01
2 a	-5.69	2.07	0.00	0.00	0.29	0.02
2 b	-0.81	0.90	0.00	0.00	3.35	-0.09
2 c	-0.16	0.67	0.00	0.00	4.55	-0.41
2 right	-4.78	1.22	0.00	0.00	0.20	-0.20
3 left	-7.52	1.10	0.00	0.00	2.21	0.09
3 a	-6.39	0.85	0.00	0.00	2.38	0.54
3 b	0.13	-0.62	0.00	0.00	4.65	0.10
3 c	2.24	-1.25	0.00	0.00	7.31	-0.33
3 right	-7.99	0.35	0.00	0.00	2.05	0.97
4 left	-5.30	0.49	0.00	0.00	-0.45	0.14
4 a	-4.42	0.32	0.00	0.00	-0.15	0.95
4 b	0.00	-0.48	0.00	0.00	3.81	-0.45
4 c	0.45	-0.52	0.00	0.00	4.57	-0.68
4 right	-4.89	0.79	0.00	0.00	0.36	0.00
5 left	-6.22	0.83	0.00	0.00	0.30	0.03
5 a	-5.21	0.66	0.00	0.00	0.23	0.02
5 b	-2.44	0.25	0.00	0.00	0.52	0.16
5 c	-0.60	0.05	0.00	0.00	0.22	0.02
6 a	-0.90	-0.35	0.00	0.00	0.82	-0.39
6 b	-0.40	-0.01	0.00	0.00	0.67	-0.05
6 c	0.84	1.01	0.00	0.00	0.05	-0.09
7 a	-1.06	0.09	0.00	0.00	0.69	-0.85
7 b	-0.55	0.39	0.00	0.00	0.52	-0.60
7 c	0.81	1.26	0.00	0.00	0.04	-0.22
8 top	-6.63	-4.06	0.00	0.00	6.03	-4.71
8 a	-6.14	-3.58	0.00	0.00	5.13	-4.20
8 b	-4.06	-1.46	0.00	0.00	2.42	-2.03
8 c	-2.01	0.29	0.00	0.00	0.53	-0.64
9 top	2.74	-3.43	0.00	0.00	10.09	-5.01
9 a	2.65	-3.00	0.00	0.00	8.61	-4.49
9 b	2.26	-1.11	0.00	0.00	3.91	-2.36
9 c	1.87	0.43	0.00	0.00	0.45	-0.11
10 top	-2.69	-3.61	0.00	0.00	9.25	-4.42
10 a	-2.57	-3.18	0.00	0.00	8.00	-3.92
10 b	-2.09	-1.25	0.00	0.00	3.85	-1.82
10 c	-1.62	0.35	0.00	0.00	0.61	-0.51
11 top	1.33	-3.33	0.00	0.00	2.05	-6.14
11 a	1.35	-2.92	0.00	0.00	1.74	-5.45
11 b	1.47	-1.10	0.00	0.00	0.69	-2.63
11 c	1.59	0.41	0.00	0.00	0.35	0.09

VEH: HL93- TANDEM BRUG(5.75.44) page 56
date 11/09/2009; time 13:26:05
Cline Avenue - Load Rating - Double Box - 4 Webs - 71.105' W

Summary of the results (Minimum)

Section	--- Deadload ----		----- P.T. ------		--- Live load ---	
	Moment	Ax.Frc	Moment	Ax.Frc	Moment	Ax.Frc
1 a	-3.62	0.35	0.00	0.00	-1.44	0.15
1 b	-7.11	0.78	0.00	0.00	-6.80	0.42
1 c	-11.91	1.48	0.00	0.00	-12.53	1.12
1 right	-13.26	1.69	0.00	0.00	-15.33	1.41
2 left	-6.63	2.28	0.00	0.00	-10.97	1.36
2 a	-5.69	2.07	0.00	0.00	-8.08	1.07
2 b	-0.81	0.90	0.00	0.00	-1.50	0.46
2 c	-0.16	0.67	0.00	0.00	-0.97	0.67
2 right	-4.78	1.22	0.00	0.00	-9.41	0.75
3 left	-7.52	1.10	0.00	0.00	-15.32	0.37
3 a	-6.39	0.85	0.00	0.00	-13.75	0.24
3 b	0.13	-0.62	0.00	0.00	-4.25	-0.31
3 c	2.24	-1.25	0.00	0.00	-0.31	-0.17
3 right	-7.99	0.35	0.00	0.00	-15.17	0.35
4 left	-5.30	0.49	0.00	0.00	-9.40	0.60
4 a	-4.42	0.32	0.00	0.00	-8.03	0.32
4 b	0.00	-0.48	0.00	0.00	-1.40	-0.04
4 c	0.45	-0.52	0.00	0.00	-0.78	0.35
4 right	-4.89	0.79	0.00	0.00	-10.49	0.81
5 left	-6.22	0.83	0.00	0.00	-8.20	1.03
5 a	-5.21	0.66	0.00	0.00	-5.99	0.77
5 b	-2.44	0.25	0.00	0.00	-0.73	0.24
5 c	-0.60	0.05	0.00	0.00	-0.14	0.04
6 a	-0.90	-0.35	0.00	0.00	-0.51	0.23
6 b	-0.40	-0.01	0.00	0.00	-0.43	0.24
6 c	0.84	1.01	0.00	0.00	-0.07	1.38
7 a	-1.06	0.09	0.00	0.00	-0.56	1.16
7 b	-0.55	0.39	0.00	0.00	-0.45	1.27
7 c	0.81	1.26	0.00	0.00	-0.07	1.39
8 top	-6.63	-4.06	0.00	0.00	-9.06	-6.31
8 a	-6.14	-3.58	0.00	0.00	-7.71	-5.62
8 b	-4.06	-1.46	0.00	0.00	-3.51	-2.74
8 c	-2.01	0.29	0.00	0.00	-0.38	-0.57
9 top	2.74	-3.43	0.00	0.00	-8.85	-2.86
9 a	2.65	-3.00	0.00	0.00	-7.86	-3.77
9 b	2.26	-1.11	0.00	0.00	-3.77	-1.75
9 c	1.87	0.43	0.00	0.00	-0.60	-0.51
10 top	-2.69	-3.61	0.00	0.00	-9.96	-4.99
10 a	-2.57	-3.18	0.00	0.00	-8.49	-4.47
10 b	-2.09	-1.25	0.00	0.00	-3.84	-2.35
10 c	-1.62	0.35	0.00	0.00	-0.37	-0.27
11 top	1.33	-3.33	0.00	0.00	-5.99	-4.70
11 a	1.35	-2.92	0.00	0.00	-5.10	-4.19
11 b	1.47	-1.10	0.00	0.00	-2.41	-2.03
11 c	1.59	0.41	0.00	0.00	-0.54	-0.64

VEH: R1 - TOLL ROAD BRUG(5.75.44) page 55
date 11/09/2009; time 13:26:07
Cline Avenue - Load Rating - Double Box - 4 Webs - 71.105' W

Summary of the results (Maximum)

Section	--- Deadload ----		----- P.T. ------		--- Live load ---	
	Moment	Ax.Frc	Moment	Ax.Frc	Moment	Ax.Frc
1 a	-3.62	0.35	0.00	0.00	0.62	0.13
1 b	-7.11	0.78	0.00	0.00	0.44	0.31
1 c	-11.91	1.48	0.00	0.00	0.14	0.15
1 right	-13.26	1.69	0.00	0.00	0.18	0.17
2 left	-6.63	2.28	0.00	0.00	0.25	0.02
2 a	-5.69	2.07	0.00	0.00	0.17	0.04
2 b	-0.81	0.90	0.00	0.00	3.54	-0.07
2 c	-0.16	0.67	0.00	0.00	4.58	-0.48
2 right	-4.78	1.22	0.00	0.00	0.70	1.26
3 left	-7.52	1.10	0.00	0.00	6.24	1.20
3 a	-6.39	0.85	0.00	0.00	6.96	1.00
3 b	0.13	-0.62	0.00	0.00	6.02	0.22
3 c	2.24	-1.25	0.00	0.00	6.77	-0.30
3 right	-7.99	0.35	0.00	0.00	6.74	0.78
4 left	-5.30	0.49	0.00	0.00	0.71	1.15
4 a	-4.42	0.32	0.00	0.00	1.51	0.81
4 b	0.00	-0.48	0.00	0.00	4.24	-0.64
4 c	0.45	-0.52	0.00	0.00	4.60	-0.89
4 right	-4.89	0.79	0.00	0.00	0.29	0.01
5 left	-6.22	0.83	0.00	0.00	0.17	0.10
5 a	-5.21	0.66	0.00	0.00	0.14	0.08
5 b	-2.44	0.25	0.00	0.00	0.37	0.12
5 c	-0.60	0.05	0.00	0.00	0.12	0.02
6 a	-0.90	-0.35	0.00	0.00	1.29	-0.67
6 b	-0.40	-0.01	0.00	0.00	1.09	-0.35
6 c	0.84	1.01	0.00	0.00	0.08	-0.26
7 a	-1.06	0.09	0.00	0.00	0.93	-1.03
7 b	-0.55	0.39	0.00	0.00	0.77	-0.81
7 c	0.81	1.26	0.00	0.00	0.07	-0.34
8 top	-6.63	-4.06	0.00	0.00	7.00	-3.62
8 a	-6.14	-3.58	0.00	0.00	6.19	-3.19
8 b	-4.06	-1.46	0.00	0.00	3.29	-1.52
8 c	-2.01	0.29	0.00	0.00	0.89	-0.52
9 top	2.74	-3.43	0.00	0.00	11.88	-3.38
9 a	2.65	-3.00	0.00	0.00	10.50	-3.03
9 b	2.26	-1.11	0.00	0.00	5.35	-1.59
9 c	1.87	0.43	0.00	0.00	0.71	-0.03
10 top	-2.69	-3.61	0.00	0.00	12.76	-2.88
10 a	-2.57	-3.18	0.00	0.00	11.32	-2.50
10 b	-2.09	-1.25	0.00	0.00	5.88	-1.05
10 c	-1.62	0.35	0.00	0.00	1.03	-0.29
11 top	1.33	-3.33	0.00	0.00	2.90	-4.41
11 a	1.35	-2.92	0.00	0.00	2.51	-3.88
11 b	1.47	-1.10	0.00	0.00	1.03	-1.84
11 c	1.59	0.41	0.00	0.00	0.56	0.13

VEH: R1 - TOLL ROAD BRUG(5.75.44) page 56
date 11/09/2009; time 13:26:07
Cline Avenue - Load Rating - Double Box - 4 Webs - 71.105' W

Summary of the results (Minimum)

Section	--- Deadload ----		----- P.T. ------		--- Live load ---	
	Moment	Ax.Frc	Moment	Ax.Frc	Moment	Ax.Frc
1 a	-3.62	0.35	0.00	0.00	-1.90	0.19
1 b	-7.11	0.78	0.00	0.00	-6.54	0.46
1 c	-11.91	1.48	0.00	0.00	-11.60	1.00
1 right	-13.26	1.69	0.00	0.00	-13.81	1.22
2 left	-6.63	2.28	0.00	0.00	-8.10	0.04
2 a	-5.69	2.07	0.00	0.00	-6.64	-0.27
2 b	-0.81	0.90	0.00	0.00	-1.40	0.94
2 c	-0.16	0.67	0.00	0.00	-1.29	0.82
2 right	-4.78	1.22	0.00	0.00	-7.53	0.41
3 left	-7.52	1.10	0.00	0.00	-15.39	0.23
3 a	-6.39	0.85	0.00	0.00	-13.97	0.14
3 b	0.13	-0.62	0.00	0.00	-4.91	-0.37
3 c	2.24	-1.25	0.00	0.00	-0.47	-0.26
3 right	-7.99	0.35	0.00	0.00	-15.12	0.20
4 left	-5.30	0.49	0.00	0.00	-6.49	-0.91
4 a	-4.42	0.32	0.00	0.00	-4.77	-0.98
4 b	0.00	-0.48	0.00	0.00	-1.53	0.74
4 c	0.45	-0.52	0.00	0.00	-1.14	0.50
4 right	-4.89	0.79	0.00	0.00	-8.04	-0.29
5 left	-6.22	0.83	0.00	0.00	-5.77	0.72
5 a	-5.21	0.66	0.00	0.00	-4.27	0.53
5 b	-2.44	0.25	0.00	0.00	-0.54	0.17
5 c	-0.60	0.05	0.00	0.00	-0.06	0.03
6 a	-0.90	-0.35	0.00	0.00	-0.81	0.39
6 b	-0.40	-0.01	0.00	0.00	-0.69	0.39
6 c	0.84	1.01	0.00	0.00	-0.10	1.58
7 a	-1.06	0.09	0.00	0.00	-0.87	1.57
7 b	-0.55	0.39	0.00	0.00	-0.74	1.63
7 c	0.81	1.26	0.00	0.00	-0.10	1.60
8 top	-6.63	-4.06	0.00	0.00	-10.67	-4.70
8 a	-6.14	-3.58	0.00	0.00	-9.38	-4.14
8 b	-4.06	-1.46	0.00	0.00	-4.75	-1.96
8 c	-2.01	0.29	0.00	0.00	-0.63	-0.46
9 top	2.74	-3.43	0.00	0.00	-12.50	-2.77
9 a	2.65	-3.00	0.00	0.00	-11.09	-2.41
9 b	2.26	-1.11	0.00	0.00	-5.75	-1.01
9 c	1.87	0.43	0.00	0.00	-1.02	-0.30
10 top	-2.69	-3.61	0.00	0.00	-11.63	-3.35
10 a	-2.57	-3.18	0.00	0.00	-10.28	-3.00
10 b	-2.09	-1.25	0.00	0.00	-5.24	-1.57
10 c	-1.62	0.35	0.00	0.00	-0.64	-0.30
11 top	1.33	-3.33	0.00	0.00	-6.95	-3.61
11 a	1.35	-2.92	0.00	0.00	-6.15	-3.19
11 b	1.47	-1.10	0.00	0.00	-3.28	-1.54
11 c	1.59	0.41	0.00	0.00	-0.91	-0.53

VEH: R2 - TOLL ROAD BRUG(5.75.44) page 55
date 11/09/2009; time 13:26:07
Cline Avenue - Load Rating - Double Box - 4 Webs - 71.105' W

Summary of the results (Maximum)

Section	--- Deadload ---- Moment	Ax.Frc	----- P.T. ------ Moment	Ax.Frc	--- Live load --- Moment	Ax.Frc
1 a	-3.62	0.35	0.00	0.00	0.94	0.10
1 b	-7.11	0.78	0.00	0.00	0.74	0.23
1 c	-11.91	1.48	0.00	0.00	0.07	0.16
1 right	-13.26	1.69	0.00	0.00	0.08	0.18
2 left	-6.63	2.28	0.00	0.00	0.14	0.01
2 a	-5.69	2.07	0.00	0.00	0.60	1.17
2 b	-0.81	0.90	0.00	0.00	3.38	-0.09
2 c	-0.16	0.67	0.00	0.00	4.33	-0.45
2 right	-4.78	1.22	0.00	0.00	1.03	1.12
3 left	-7.52	1.10	0.00	0.00	6.52	1.12
3 a	-6.39	0.85	0.00	0.00	7.07	0.88
3 b	0.13	-0.62	0.00	0.00	5.94	0.19
3 c	2.24	-1.25	0.00	0.00	6.46	-0.24
3 right	-7.99	0.35	0.00	0.00	6.94	0.76
4 left	-5.30	0.49	0.00	0.00	1.04	1.01
4 a	-4.42	0.32	0.00	0.00	1.98	0.62
4 b	0.00	-0.48	0.00	0.00	4.04	-0.62
4 c	0.45	-0.52	0.00	0.00	4.35	-0.81
4 right	-4.89	0.79	0.00	0.00	0.18	0.01
5 left	-6.22	0.83	0.00	0.00	0.08	0.10
5 a	-5.21	0.66	0.00	0.00	0.06	0.08
5 b	-2.44	0.25	0.00	0.00	0.66	0.05
5 c	-0.60	0.05	0.00	0.00	0.20	0.01
6 a	-0.90	-0.35	0.00	0.00	1.20	-0.61
6 b	-0.40	-0.01	0.00	0.00	1.01	-0.34
6 c	0.84	1.01	0.00	0.00	0.06	-0.22
7 a	-1.06	0.09	0.00	0.00	0.82	-0.85
7 b	-0.55	0.39	0.00	0.00	0.69	-0.67
7 c	0.81	1.26	0.00	0.00	0.06	-0.29
8 top	-6.63	-4.06	0.00	0.00	6.04	-3.79
8 a	-6.14	-3.58	0.00	0.00	5.29	-3.23
8 b	-4.06	-1.46	0.00	0.00	2.84	-1.35
8 c	-2.01	0.29	0.00	0.00	0.80	-0.44
9 top	2.74	-3.43	0.00	0.00	10.25	-2.92
9 a	2.65	-3.00	0.00	0.00	9.06	-2.59
9 b	2.26	-1.11	0.00	0.00	4.64	-1.31
9 c	1.87	0.43	0.00	0.00	0.61	0.01
10 top	-2.69	-3.61	0.00	0.00	11.72	-3.12
10 a	-2.57	-3.18	0.00	0.00	10.37	-2.58
10 b	-2.09	-1.25	0.00	0.00	5.40	-0.88
10 c	-1.62	0.35	0.00	0.00	0.94	-0.22
11 top	1.33	-3.33	0.00	0.00	2.67	-4.85
11 a	1.35	-2.92	0.00	0.00	2.29	-4.08
11 b	1.47	-1.10	0.00	0.00	0.93	-1.64
11 c	1.59	0.41	0.00	0.00	0.50	0.11

VEH: R2 - TOLL ROAD BRUG(5.75.44) page 56
date 11/09/2009; time 13:26:07
Cline Avenue - Load Rating - Double Box - 4 Webs - 71.105' W

Summary of the results (Minimum)

Section	--- Deadload ---- Moment	Ax.Frc	----- P.T. ------ Moment	Ax.Frc	--- Live load --- Moment	Ax.Frc
1 a	-3.62	0.35	0.00	0.00	-1.13	0.15
1 b	-7.11	0.78	0.00	0.00	-5.48	0.33
1 c	-11.91	1.48	0.00	0.00	-9.34	0.81
1 right	-13.26	1.69	0.00	0.00	-11.58	1.07
2 left	-6.63	2.28	0.00	0.00	-7.02	0.06
2 a	-5.69	2.07	0.00	0.00	-5.83	-0.25
2 b	-0.81	0.90	0.00	0.00	-1.10	0.76
2 c	-0.16	0.67	0.00	0.00	-1.07	0.68
2 right	-4.78	1.22	0.00	0.00	-6.01	0.30
3 left	-7.52	1.10	0.00	0.00	-12.95	0.17
3 a	-6.39	0.85	0.00	0.00	-11.74	0.10
3 b	0.13	-0.62	0.00	0.00	-4.53	-0.31
3 c	2.24	-1.25	0.00	0.00	-0.41	-0.23
3 right	-7.99	0.35	0.00	0.00	-12.68	0.15
4 left	-5.30	0.49	0.00	0.00	-5.41	-0.84
4 a	-4.42	0.32	0.00	0.00	-3.85	-0.66
4 b	0.00	-0.48	0.00	0.00	-1.30	0.50
4 c	0.45	-0.52	0.00	0.00	-0.98	0.42
4 right	-4.89	0.79	0.00	0.00	-6.97	-0.21
5 left	-6.22	0.83	0.00	0.00	-5.13	0.68
5 a	-5.21	0.66	0.00	0.00	-3.64	0.45
5 b	-2.44	0.25	0.00	0.00	-0.17	0.10
5 c	-0.60	0.05	0.00	0.00	-0.05	0.02
6 a	-0.90	-0.35	0.00	0.00	-0.73	0.37
6 b	-0.40	-0.01	0.00	0.00	-0.63	0.36
6 c	0.84	1.01	0.00	0.00	-0.09	1.32
7 a	-1.06	0.09	0.00	0.00	-0.81	1.42
7 b	-0.55	0.39	0.00	0.00	-0.70	1.45
7 c	0.81	1.26	0.00	0.00	-0.09	1.33
8 top	-6.63	-4.06	0.00	0.00	-9.18	-4.95
8 a	-6.14	-3.58	0.00	0.00	-8.01	-4.19
8 b	-4.06	-1.46	0.00	0.00	-4.04	-1.74
8 c	-2.01	0.29	0.00	0.00	-0.51	-0.39
9 top	2.74	-3.43	0.00	0.00	-11.47	-2.97
9 a	2.65	-3.00	0.00	0.00	-10.16	-2.47
9 b	2.26	-1.11	0.00	0.00	-5.28	-0.84
9 c	1.87	0.43	0.00	0.00	-0.93	-0.23
10 top	-2.69	-3.61	0.00	0.00	-10.00	-2.89
10 a	-2.57	-3.18	0.00	0.00	-8.84	-2.56
10 b	-2.09	-1.25	0.00	0.00	-4.53	-1.29
10 c	-1.62	0.35	0.00	0.00	-0.58	-0.26
11 top	1.33	-3.33	0.00	0.00	-6.05	-3.78
11 a	1.35	-2.92	0.00	0.00	-5.28	-3.22
11 b	1.47	-1.10	0.00	0.00	-2.83	-1.36
11 c	1.59	0.41	0.00	0.00	-0.82	-0.45

VEH: R3 - TOLL ROAD BRUG(5.75.44) page 55
date 11/09/2009; time 13:26:08
Cline Avenue - Load Rating - Double Box - 4 Webs - 71.105' W

Summary of the results (Maximum)

Section	--- Deadload ---- Moment	Ax.Frc	----- P.T. ------ Moment	Ax.Frc	--- Live load --- Moment	Ax.Frc
1 a	-3.62	0.35	0.00	0.00	0.73	0.07
1 b	-7.11	0.78	0.00	0.00	0.48	0.21
1 c	-11.91	1.48	0.00	0.00	0.03	0.17
1 right	-13.26	1.69	0.00	0.00	0.04	0.20
2 left	-6.63	2.28	0.00	0.00	0.17	0.04
2 a	-5.69	2.07	0.00	0.00	0.31	1.14
2 b	-0.81	0.90	0.00	0.00	3.33	-0.22
2 c	-0.16	0.67	0.00	0.00	4.23	-0.64
2 right	-4.78	1.22	0.00	0.00	1.00	0.82
3 left	-7.52	1.10	0.00	0.00	8.22	0.97
3 a	-6.39	0.85	0.00	0.00	8.55	0.80
3 b	0.13	-0.62	0.00	0.00	6.66	0.12
3 c	2.24	-1.25	0.00	0.00	5.96	-0.30
3 right	-7.99	0.35	0.00	0.00	8.72	0.66
4 left	-5.30	0.49	0.00	0.00	1.01	0.70
4 a	-4.42	0.32	0.00	0.00	1.86	0.38
4 b	0.00	-0.48	0.00	0.00	4.15	-0.86
4 c	0.45	-0.52	0.00	0.00	4.26	-0.94
4 right	-4.89	0.79	0.00	0.00	0.20	0.02
5 left	-6.22	0.83	0.00	0.00	0.05	0.10
5 a	-5.21	0.66	0.00	0.00	0.03	0.08
5 b	-2.44	0.25	0.00	0.00	0.37	0.11
5 c	-0.60	0.05	0.00	0.00	0.16	0.01
6 a	-0.90	-0.35	0.00	0.00	1.33	-0.59
6 b	-0.40	-0.01	0.00	0.00	1.13	-0.30
6 c	0.84	1.01	0.00	0.00	0.06	-0.39
7 a	-1.06	0.09	0.00	0.00	0.83	-0.76
7 b	-0.55	0.39	0.00	0.00	0.69	-0.57
7 c	0.81	1.26	0.00	0.00	0.06	-0.38
8 top	-6.63	-4.06	0.00	0.00	6.17	-1.87
8 a	-6.14	-3.58	0.00	0.00	5.42	-1.67
8 b	-4.06	-1.46	0.00	0.00	2.77	-1.59
8 c	-2.01	0.29	0.00	0.00	0.83	-0.54
9 top	2.74	-3.43	0.00	0.00	10.62	-3.27
9 a	2.65	-3.00	0.00	0.00	9.30	-2.94
9 b	2.26	-1.11	0.00	0.00	4.70	-1.05
9 c	1.87	0.43	0.00	0.00	0.63	-0.29
10 top	-2.69	-3.61	0.00	0.00	13.57	-2.63
10 a	-2.57	-3.18	0.00	0.00	11.99	-2.30
10 b	-2.09	-1.25	0.00	0.00	6.14	-0.96
10 c	-1.62	0.35	0.00	0.00	1.01	-0.37
11 top	1.33	-3.33	0.00	0.00	2.79	-4.43
11 a	1.35	-2.92	0.00	0.00	2.41	-3.93
11 b	1.47	-1.10	0.00	0.00	0.96	-1.94
11 c	1.59	0.41	0.00	0.00	0.50	0.12

VEH: R3 - TOLL ROAD BRUG(5.75.44) page 56
date 11/09/2009; time 13:26:08
Cline Avenue - Load Rating - Double Box - 4 Webs - 71.105' W

Summary of the results (Minimum)

Section	--- Deadload ---- Moment	Ax.Frc	----- P.T. ------ Moment	Ax.Frc	--- Live load --- Moment	Ax.Frc
1 a	-3.62	0.35	0.00	0.00	-1.30	0.09
1 b	-7.11	0.78	0.00	0.00	-5.40	0.27
1 c	-11.91	1.48	0.00	0.00	-9.83	0.72
1 right	-13.26	1.69	0.00	0.00	-11.94	0.92
2 left	-6.63	2.28	0.00	0.00	-7.50	0.02
2 a	-5.69	2.07	0.00	0.00	-6.45	-0.29
2 b	-0.81	0.90	0.00	0.00	-0.99	0.06
2 c	-0.16	0.67	0.00	0.00	-1.05	0.41
2 right	-4.78	1.22	0.00	0.00	-6.09	0.21
3 left	-7.52	1.10	0.00	0.00	-13.48	0.11
3 a	-6.39	0.85	0.00	0.00	-12.29	0.03
3 b	0.13	-0.62	0.00	0.00	-5.62	-0.35
3 c	2.24	-1.25	0.00	0.00	-0.38	-0.19
3 right	-7.99	0.35	0.00	0.00	-13.13	0.06
4 left	-5.30	0.49	0.00	0.00	-5.24	-1.05
4 a	-4.42	0.32	0.00	0.00	-3.89	-0.72
4 b	0.00	-0.48	0.00	0.00	-1.34	0.53
4 c	0.45	-0.52	0.00	0.00	-1.02	0.37
4 right	-4.89	0.79	0.00	0.00	-7.47	-0.21
5 left	-6.22	0.83	0.00	0.00	-5.74	0.66
5 a	-5.21	0.66	0.00	0.00	-4.17	0.49
5 b	-2.44	0.25	0.00	0.00	-0.44	0.15
5 c	-0.60	0.05	0.00	0.00	-0.06	0.02
6 a	-0.90	-0.35	0.00	0.00	-0.74	0.34
6 b	-0.40	-0.01	0.00	0.00	-0.64	0.33
6 c	0.84	1.01	0.00	0.00	-0.10	1.35
7 a	-1.06	0.09	0.00	0.00	-0.95	1.62
7 b	-0.55	0.39	0.00	0.00	-0.81	1.63
7 c	0.81	1.26	0.00	0.00	-0.10	1.36
8 top	-6.63	-4.06	0.00	0.00	-9.15	-4.56
8 a	-6.14	-3.58	0.00	0.00	-7.94	-4.06
8 b	-4.06	-1.46	0.00	0.00	-3.83	-2.01
8 c	-2.01	0.29	0.00	0.00	-0.52	0.12
9 top	2.74	-3.43	0.00	0.00	-13.27	-2.54
9 a	2.65	-3.00	0.00	0.00	-11.73	-2.22
9 b	2.26	-1.11	0.00	0.00	-5.99	-0.92
9 c	1.87	0.43	0.00	0.00	-1.00	-0.38
10 top	-2.69	-3.61	0.00	0.00	-10.31	-3.24
10 a	-2.57	-3.18	0.00	0.00	-9.02	-2.91
10 b	-2.09	-1.25	0.00	0.00	-4.55	-1.03
10 c	-1.62	0.35	0.00	0.00	-0.61	-0.28
11 top	1.33	-3.33	0.00	0.00	-6.12	-1.87
11 a	1.35	-2.92	0.00	0.00	-5.38	-1.67
11 b	1.47	-1.10	0.00	0.00	-2.77	-1.59
11 c	1.59	0.41	0.00	0.00	-0.85	-0.54

VEH: R4 - MICHIGAN T BRUG(5.75.44) page 55
date 11/09/2009; time 13:26:09
Cline Avenue - Load Rating - Double Box - 4 Webs - 71.105' W

Summary of the results (Maximum)

Section	--- Deadload ---		----- P.T. ------		--- Live load ---	
	Moment	Ax.Frc	Moment	Ax.Frc	Moment	Ax.Frc
1 a	-3.62	0.35	0.00	0.00	0.57	0.08
1 b	-7.11	0.78	0.00	0.00	0.49	0.16
1 c	-11.91	1.48	0.00	0.00	0.21	0.39
1 right	-13.26	1.69	0.00	0.00	0.02	0.53
2 left	-6.63	2.28	0.00	0.00	0.51	1.50
2 a	-5.69	2.07	0.00	0.00	1.42	1.20
2 b	-0.81	0.90	0.00	0.00	3.60	-0.14
2 c	-0.16	0.67	0.00	0.00	4.44	-0.60
2 right	-4.78	1.22	0.00	0.00	2.46	0.94
3 left	-7.52	1.10	0.00	0.00	10.68	1.06
3 a	-6.39	0.85	0.00	0.00	10.47	0.88
3 b	0.13	-0.62	0.00	0.00	7.35	0.24
3 c	2.24	-1.25	0.00	0.00	6.11	-0.23
3 right	-7.99	0.35	0.00	0.00	11.04	0.62
4 left	-5.30	0.49	0.00	0.00	2.48	0.79
4 a	-4.42	0.32	0.00	0.00	3.13	0.42
4 b	0.00	-0.48	0.00	0.00	4.52	-0.88
4 c	0.45	-0.52	0.00	0.00	4.48	-1.02
4 right	-4.89	0.79	0.00	0.00	0.22	0.02
5 left	-6.22	0.83	0.00	0.00	0.02	0.34
5 a	-5.21	0.66	0.00	0.00	0.21	0.21
5 b	-2.44	0.25	0.00	0.00	0.48	0.03
5 c	-0.60	0.05	0.00	0.00	0.13	0.00
6 a	-0.90	-0.35	0.00	0.00	1.61	-0.80
6 b	-0.40	-0.01	0.00	0.00	1.38	-0.52
6 c	0.84	1.01	0.00	0.00	0.08	-0.47
7 a	-1.06	0.09	0.00	0.00	1.01	-0.94
7 b	-0.55	0.39	0.00	0.00	0.87	-0.77
7 c	0.81	1.26	0.00	0.00	0.07	-0.45
8 top	-6.63	-4.06	0.00	0.00	7.36	-2.16
8 a	-6.14	-3.58	0.00	0.00	6.57	-1.89
8 b	-4.06	-1.46	0.00	0.00	3.44	-1.19
8 c	-2.01	0.29	0.00	0.00	1.06	-0.43
9 top	2.74	-3.43	0.00	0.00	12.04	-2.54
9 a	2.65	-3.00	0.00	0.00	10.76	-2.27
9 b	2.26	-1.11	0.00	0.00	5.67	-0.98
9 c	1.87	0.43	0.00	0.00	0.79	-0.30
10 top	-2.69	-3.61	0.00	0.00	15.27	-2.05
10 a	-2.57	-3.18	0.00	0.00	13.62	-1.66
10 b	-2.09	-1.25	0.00	0.00	7.21	-0.45
10 c	-1.62	0.35	0.00	0.00	1.26	-0.10
11 top	1.33	-3.33	0.00	0.00	3.39	-3.74
11 a	1.35	-2.92	0.00	0.00	2.93	-3.15
11 b	1.47	-1.10	0.00	0.00	1.21	-1.32
11 c	1.59	0.41	0.00	0.00	0.64	0.14

VEH: R4 - MICHIGAN T BRUG(5.75.44) page 56
date 11/09/2009; time 13:26:09
Cline Avenue - Load Rating - Double Box - 4 Webs - 71.105' W

Summary of the results (Minimum)

Section	--- Deadload ---		----- P.T. ------		--- Live load ---	
	Moment	Ax.Frc	Moment	Ax.Frc	Moment	Ax.Frc
1 a	-3.62	0.35	0.00	0.00	-1.47	0.14
1 b	-7.11	0.78	0.00	0.00	-5.41	0.31
1 c	-11.91	1.48	0.00	0.00	-9.16	0.69
1 right	-13.26	1.69	0.00	0.00	-11.05	0.96
2 left	-6.63	2.28	0.00	0.00	-7.36	-0.30
2 a	-5.69	2.07	0.00	0.00	-6.49	-0.29
2 b	-0.81	0.90	0.00	0.00	-1.33	0.29
2 c	-0.16	0.67	0.00	0.00	-1.29	0.51
2 right	-4.78	1.22	0.00	0.00	-5.52	-0.06
3 left	-7.52	1.10	0.00	0.00	-14.45	-0.12
3 a	-6.39	0.85	0.00	0.00	-13.49	-0.16
3 b	0.13	-0.62	0.00	0.00	-6.30	-0.44
3 c	2.24	-1.25	0.00	0.00	-0.51	-0.28
3 right	-7.99	0.35	0.00	0.00	-14.04	-0.08
4 left	-5.30	0.49	0.00	0.00	-4.72	-1.33
4 a	-4.42	0.32	0.00	0.00	-3.41	-0.95
4 b	0.00	-0.48	0.00	0.00	-1.60	0.64
4 c	0.45	-0.52	0.00	0.00	-1.26	0.47
4 right	-4.89	0.79	0.00	0.00	-7.30	-0.58
5 left	-6.22	0.83	0.00	0.00	-4.03	0.49
5 a	-5.21	0.66	0.00	0.00	-2.91	0.32
5 b	-2.44	0.25	0.00	0.00	-0.12	0.08
5 c	-0.60	0.05	0.00	0.00	-0.01	0.01
6 a	-0.90	-0.35	0.00	0.00	-0.96	0.51
6 b	-0.40	-0.01	0.00	0.00	-0.82	0.50
6 c	0.84	1.01	0.00	0.00	-0.12	1.48
7 a	-1.06	0.09	0.00	0.00	-1.11	1.82
7 b	-0.55	0.39	0.00	0.00	-0.96	1.81
7 c	0.81	1.26	0.00	0.00	-0.12	1.50
8 top	-6.63	-4.06	0.00	0.00	-10.53	-3.91
8 a	-6.14	-3.58	0.00	0.00	-9.31	-3.32
8 b	-4.06	-1.46	0.00	0.00	-4.83	-1.42
8 c	-2.01	0.29	0.00	0.00	-0.66	0.15
9 top	2.74	-3.43	0.00	0.00	-14.93	-1.97
9 a	2.65	-3.00	0.00	0.00	-13.32	-1.59
9 b	2.26	-1.11	0.00	0.00	-7.04	-0.44
9 c	1.87	0.43	0.00	0.00	-1.25	-0.11
10 top	-2.69	-3.61	0.00	0.00	-11.69	-2.51
10 a	-2.57	-3.18	0.00	0.00	-10.45	-2.23
10 b	-2.09	-1.25	0.00	0.00	-5.50	-1.19
10 c	-1.62	0.35	0.00	0.00	-0.77	-0.29
11 top	1.33	-3.33	0.00	0.00	-7.31	-2.16
11 a	1.35	-2.92	0.00	0.00	-6.53	-1.89
11 b	1.47	-1.10	0.00	0.00	-3.42	-1.20
11 c	1.59	0.41	0.00	0.00	-1.09	-0.43

VEH: R5 - MICHIGAN T BRUG(5.75.44) page 55
date 11/09/2009; time 13:26:09
Cline Avenue - Load Rating - Double Box - 4 Webs - 71.105' W

Summary of the results (Maximum)

Section	Deadload Moment	Deadload Ax.Frc	P.T. Moment	P.T. Ax.Frc	Live load Moment	Live load Ax.Frc
1 a	-3.62	0.35	0.00	0.00	0.28	0.15
1 b	-7.11	0.78	0.00	0.00	0.15	0.35
1 c	-11.91	1.48	0.00	0.00	0.07	0.23
1 right	-13.26	1.69	0.00	0.00	0.09	0.26
2 left	-6.63	2.28	0.00	0.00	0.19	0.02
2 a	-5.69	2.07	0.00	0.00	0.48	1.48
2 b	-0.81	0.90	0.00	0.00	3.92	-0.14
2 c	-0.16	0.67	0.00	0.00	4.90	-0.66
2 right	-4.78	1.22	0.00	0.00	1.80	0.99
3 left	-7.52	1.10	0.00	0.00	10.36	1.15
3 a	-6.39	0.85	0.00	0.00	10.12	1.04
3 b	0.13	-0.62	0.00	0.00	7.52	0.26
3 c	2.24	-1.25	0.00	0.00	6.81	-0.33
3 right	-7.99	0.35	0.00	0.00	10.45	0.69
4 left	-5.30	0.49	0.00	0.00	1.82	0.83
4 a	-4.42	0.32	0.00	0.00	2.36	0.65
4 b	0.00	-0.48	0.00	0.00	4.89	-0.91
4 c	0.45	-0.52	0.00	0.00	4.94	-1.14
4 right	-4.89	0.79	0.00	0.00	0.24	0.02
5 left	-6.22	0.83	0.00	0.00	0.09	0.14
5 a	-5.21	0.66	0.00	0.00	0.07	0.11
5 b	-2.44	0.25	0.00	0.00	0.09	0.14
5 c	-0.60	0.05	0.00	0.00	0.05	0.02
6 a	-0.90	-0.35	0.00	0.00	1.71	-0.85
6 b	-0.40	-0.01	0.00	0.00	1.45	-0.48
6 c	0.84	1.01	0.00	0.00	0.08	-0.29
7 a	-1.06	0.09	0.00	0.00	1.14	-1.15
7 b	-0.55	0.39	0.00	0.00	0.96	-0.91
7 c	0.81	1.26	0.00	0.00	0.08	-0.49
8 top	-6.63	-4.06	0.00	0.00	8.14	-1.89
8 a	-6.14	-3.58	0.00	0.00	7.25	-1.71
8 b	-4.06	-1.46	0.00	0.00	3.93	-1.56
8 c	-2.01	0.29	0.00	0.00	1.13	-0.56
9 top	2.74	-3.43	0.00	0.00	14.08	-3.42
9 a	2.65	-3.00	0.00	0.00	12.52	-3.10
9 b	2.26	-1.11	0.00	0.00	6.44	-1.73
9 c	1.87	0.43	0.00	0.00	0.83	-0.38
10 top	-2.69	-3.61	0.00	0.00	16.48	-2.04
10 a	-2.57	-3.18	0.00	0.00	14.74	-1.82
10 b	-2.09	-1.25	0.00	0.00	7.73	-0.83
10 c	-1.62	0.35	0.00	0.00	1.33	-0.23
11 top	1.33	-3.33	0.00	0.00	3.62	-3.47
11 a	1.35	-2.92	0.00	0.00	3.16	-3.15
11 b	1.47	-1.10	0.00	0.00	1.32	-1.75
11 c	1.59	0.41	0.00	0.00	0.69	0.16

VEH: R5 - MICHIGAN T BRUG(5.75.44) page 56
date 11/09/2009; time 13:26:09
Cline Avenue - Load Rating - Double Box - 4 Webs - 71.105' W

Summary of the results (Minimum)

Section	Deadload Moment	Deadload Ax.Frc	P.T. Moment	P.T. Ax.Frc	Live load Moment	Live load Ax.Frc
1 a	-3.62	0.35	0.00	0.00	-2.40	0.20
1 b	-7.11	0.78	0.00	0.00	-6.96	0.48
1 c	-11.91	1.48	0.00	0.00	-12.49	0.96
1 right	-13.26	1.69	0.00	0.00	-14.50	1.11
2 left	-6.63	2.28	0.00	0.00	-8.90	-0.06
2 a	-5.69	2.07	0.00	0.00	-7.83	-0.35
2 b	-0.81	0.90	0.00	0.00	-1.44	1.00
2 c	-0.16	0.67	0.00	0.00	-1.42	0.92
2 right	-4.78	1.22	0.00	0.00	-7.75	0.26
3 left	-7.52	1.10	0.00	0.00	-17.33	0.20
3 a	-6.39	0.85	0.00	0.00	-15.74	0.12
3 b	0.13	-0.62	0.00	0.00	-6.55	-0.49
3 c	2.24	-1.25	0.00	0.00	-0.56	-0.31
3 right	-7.99	0.35	0.00	0.00	-16.93	0.15
4 left	-5.30	0.49	0.00	0.00	-6.47	-1.37
4 a	-4.42	0.32	0.00	0.00	-4.92	-1.40
4 b	0.00	-0.48	0.00	0.00	-1.80	0.71
4 c	0.45	-0.52	0.00	0.00	-1.35	0.50
4 right	-4.89	0.79	0.00	0.00	-8.83	-0.43
5 left	-6.22	0.83	0.00	0.00	-5.47	0.60
5 a	-5.21	0.66	0.00	0.00	-4.20	0.48
5 b	-2.44	0.25	0.00	0.00	-0.76	0.18
5 c	-0.60	0.05	0.00	0.00	-0.05	0.03
6 a	-0.90	-0.35	0.00	0.00	-1.03	0.53
6 b	-0.40	-0.01	0.00	0.00	-0.88	0.52
6 c	0.84	1.01	0.00	0.00	-0.13	1.83
7 a	-1.06	0.09	0.00	0.00	-1.17	2.02
7 b	-0.55	0.39	0.00	0.00	-1.01	2.05
7 c	0.81	1.26	0.00	0.00	-0.13	1.85
8 top	-6.63	-4.06	0.00	0.00	-12.27	-3.94
8 a	-6.14	-3.58	0.00	0.00	-10.90	-3.56
8 b	-4.06	-1.46	0.00	0.00	-5.56	-1.94
8 c	-2.01	0.29	0.00	0.00	-0.71	0.17
9 top	2.74	-3.43	0.00	0.00	-16.14	-1.99
9 a	2.65	-3.00	0.00	0.00	-14.43	-1.77
9 b	2.26	-1.11	0.00	0.00	-7.55	-0.80
9 c	1.87	0.43	0.00	0.00	-1.31	-0.24
10 top	-2.69	-3.61	0.00	0.00	-13.72	-3.38
10 a	-2.57	-3.18	0.00	0.00	-12.20	-3.07
10 b	-2.09	-1.25	0.00	0.00	-6.27	-1.71
10 c	-1.62	0.35	0.00	0.00	-0.81	-0.37
11 top	1.33	-3.33	0.00	0.00	-8.09	-1.89
11 a	1.35	-2.92	0.00	0.00	-7.21	-1.71
11 b	1.47	-1.10	0.00	0.00	-3.92	-1.57
11 c	1.59	0.41	0.00	0.00	-1.15	-0.57

VEH: S1 - SPECIAL TR BRUG(5.75.44) page 55
date 11/09/2009; time 13:26:10
Cline Avenue - Load Rating - Double Box - 4 Webs - 71.105' W

Summary of the results (Maximum)

Section	Deadload Moment	Deadload Ax.Frc	P.T. Moment	P.T. Ax.Frc	Live load Moment	Live load Ax.Frc
1 a	-3.62	0.35	0.00	0.00	0.90	0.09
1 b	-7.11	0.78	0.00	0.00	0.59	0.28
1 c	-11.91	1.48	0.00	0.00	0.04	0.14
1 right	-13.26	1.69	0.00	0.00	0.06	0.16
2 left	-6.63	2.28	0.00	0.00	0.29	0.09
2 a	-5.69	2.07	0.00	0.00	0.53	1.53
2 b	-0.81	0.90	0.00	0.00	4.54	-0.36
2 c	-0.16	0.67	0.00	0.00	5.77	-0.99
2 right	-4.78	1.22	0.00	0.00	1.65	0.93
3 left	-7.52	1.10	0.00	0.00	13.11	1.22
3 a	-6.39	0.85	0.00	0.00	13.34	1.00
3 b	0.13	-0.62	0.00	0.00	9.83	0.08
3 c	2.24	-1.25	0.00	0.00	7.91	-0.49
3 right	-7.99	0.35	0.00	0.00	13.82	0.84
4 left	-5.30	0.49	0.00	0.00	1.68	0.78
4 a	-4.42	0.32	0.00	0.00	2.76	0.35
4 b	0.00	-0.48	0.00	0.00	5.79	-1.31
4 c	0.45	-0.52	0.00	0.00	5.82	-1.37
4 right	-4.89	0.79	0.00	0.00	0.33	0.05
5 left	-6.22	0.83	0.00	0.00	0.06	0.13
5 a	-5.21	0.66	0.00	0.00	0.04	0.06
5 b	-2.44	0.25	0.00	0.00	0.45	0.14
5 c	-0.60	0.05	0.00	0.00	0.19	0.02
6 a	-0.90	-0.35	0.00	0.00	1.89	-0.81
6 b	-0.40	-0.01	0.00	0.00	1.60	-0.41
6 c	0.84	1.01	0.00	0.00	0.09	-0.58
7 a	-1.06	0.09	0.00	0.00	1.13	-1.47
7 b	-0.55	0.39	0.00	0.00	0.95	-1.21
7 c	0.81	1.26	0.00	0.00	0.09	-0.56
8 top	-6.63	-4.06	0.00	0.00	8.42	-2.48
8 a	-6.14	-3.58	0.00	0.00	7.43	-2.22
8 b	-4.06	-1.46	0.00	0.00	3.84	-2.10
8 c	-2.01	0.29	0.00	0.00	1.21	-0.73
9 top	2.74	-3.43	0.00	0.00	14.80	-2.91
9 a	2.65	-3.00	0.00	0.00	13.16	-2.64
9 b	2.26	-1.11	0.00	0.00	6.83	-1.46
9 c	1.87	0.43	0.00	0.00	0.95	-0.34
10 top	-2.69	-3.61	0.00	0.00	19.80	-3.12
10 a	-2.57	-3.18	0.00	0.00	17.56	-2.72
10 b	-2.09	-1.25	0.00	0.00	9.05	-1.11
10 c	-1.62	0.35	0.00	0.00	1.49	-0.45
11 top	1.33	-3.33	0.00	0.00	3.77	-5.65
11 a	1.35	-2.92	0.00	0.00	3.25	-5.03
11 b	1.47	-1.10	0.00	0.00	1.29	-2.52
11 c	1.59	0.41	0.00	0.00	0.72	0.17

VEH: S1 - SPECIAL TR BRUG(5.75.44) page 56
date 11/09/2009; time 13:26:10
Cline Avenue - Load Rating - Double Box - 4 Webs - 71.105' W

Summary of the results (Minimum)

Section	Deadload Moment	Deadload Ax.Frc	P.T. Moment	P.T. Ax.Frc	Live load Moment	Live load Ax.Frc
1 a	-3.62	0.35	0.00	0.00	-1.81	0.12
1 b	-7.11	0.78	0.00	0.00	-7.18	0.35
1 c	-11.91	1.48	0.00	0.00	-13.06	0.93
1 right	-13.26	1.69	0.00	0.00	-15.79	1.18
2 left	-6.63	2.28	0.00	0.00	-10.02	-0.04
2 a	-5.69	2.07	0.00	0.00	-8.68	-0.44
2 b	-0.81	0.90	0.00	0.00	-1.31	0.00
2 c	-0.16	0.67	0.00	0.00	-1.55	0.61
2 right	-4.78	1.22	0.00	0.00	-7.89	0.16
3 left	-7.52	1.10	0.00	0.00	-18.77	-0.14
3 a	-6.39	0.85	0.00	0.00	-17.61	-0.20
3 b	0.13	-0.62	0.00	0.00	-8.44	-0.47
3 c	2.24	-1.25	0.00	0.00	-0.53	-0.23
3 right	-7.99	0.35	0.00	0.00	-18.22	-0.13
4 left	-5.30	0.49	0.00	0.00	-6.50	-1.63
4 a	-4.42	0.32	0.00	0.00	-4.95	-1.07
4 b	0.00	-0.48	0.00	0.00	-1.97	0.73
4 c	0.45	-0.52	0.00	0.00	-1.50	0.55
4 right	-4.89	0.79	0.00	0.00	-9.99	-0.33
5 left	-6.22	0.83	0.00	0.00	-7.42	0.84
5 a	-5.21	0.66	0.00	0.00	-5.42	0.62
5 b	-2.44	0.25	0.00	0.00	-0.60	0.19
5 c	-0.60	0.05	0.00	0.00	-0.08	0.03
6 a	-0.90	-0.35	0.00	0.00	-1.00	0.47
6 b	-0.40	-0.01	0.00	0.00	-0.86	0.45
6 c	0.84	1.01	0.00	0.00	-0.14	1.88
7 a	-1.06	0.09	0.00	0.00	-1.39	2.36
7 b	-0.55	0.39	0.00	0.00	-1.19	2.36
7 c	0.81	1.26	0.00	0.00	-0.15	1.90
8 top	-6.63	-4.06	0.00	0.00	-12.36	-5.85
8 a	-6.14	-3.58	0.00	0.00	-10.77	-5.21
8 b	-4.06	-1.46	0.00	0.00	-5.24	-2.62
8 c	-2.01	0.29	0.00	0.00	-0.75	0.17
9 top	2.74	-3.43	0.00	0.00	-19.36	-3.02
9 a	2.65	-3.00	0.00	0.00	-17.16	-2.63
9 b	2.26	-1.11	0.00	0.00	-8.84	-1.07
9 c	1.87	0.43	0.00	0.00	-1.46	-0.46
10 top	-2.69	-3.61	0.00	0.00	-14.31	-2.86
10 a	-2.57	-3.18	0.00	0.00	-12.73	-2.59
10 b	-2.09	-1.25	0.00	0.00	-6.60	-1.43
10 c	-1.62	0.35	0.00	0.00	-0.92	-0.33
11 top	1.33	-3.33	0.00	0.00	-8.37	-2.48
11 a	1.35	-2.92	0.00	0.00	-7.39	-2.22
11 b	1.47	-1.10	0.00	0.00	-3.84	-2.11
11 c	1.59	0.41	0.00	0.00	-1.24	-0.74

VEH: S2 - SPECIAL TR BRUG(5.75.44) page 55
date 11/09/2009; time 13:26:11
Cline Avenue - Load Rating - Double Box - 4 Webs - 71.105' W

Summary of the results (Maximum)

Section	--- Deadload ----		----- P.T. ------		--- Live load ---	
	Moment	Ax.Frc	Moment	Ax.Frc	Moment	Ax.Frc
1 a	-3.62	0.35	0.00	0.00	0.75	0.10
1 b	-7.11	0.78	0.00	0.00	0.48	0.28
1 c	-11.91	1.48	0.00	0.00	0.07	0.22
1 right	-13.26	1.69	0.00	0.00	0.10	0.25
2 left	-6.63	2.28	0.00	0.00	0.29	0.09
2 a	-5.69	2.07	0.00	0.00	0.63	1.47
2 b	-0.81	0.90	0.00	0.00	4.38	-0.34
2 c	-0.16	0.67	0.00	0.00	5.56	-0.98
2 right	-4.78	1.22	0.00	0.00	1.83	0.86
3 left	-7.52	1.10	0.00	0.00	13.47	1.12
3 a	-6.39	0.85	0.00	0.00	13.33	0.94
3 b	0.13	-0.62	0.00	0.00	9.57	0.08
3 c	2.24	-1.25	0.00	0.00	7.59	-0.52
3 right	-7.99	0.35	0.00	0.00	13.95	0.78
4 left	-5.30	0.49	0.00	0.00	1.86	0.70
4 a	-4.42	0.32	0.00	0.00	2.82	0.30
4 b	0.00	-0.48	0.00	0.00	5.61	-1.29
4 c	0.45	-0.52	0.00	0.00	5.61	-1.35
4 right	-4.89	0.79	0.00	0.00	0.33	0.05
5 left	-6.22	0.83	0.00	0.00	0.10	0.12
5 a	-5.21	0.66	0.00	0.00	0.08	0.10
5 b	-2.44	0.25	0.00	0.00	0.37	0.13
5 c	-0.60	0.05	0.00	0.00	0.15	0.02
6 a	-0.90	-0.35	0.00	0.00	1.86	-0.81
6 b	-0.40	-0.01	0.00	0.00	1.58	-0.42
6 c	0.84	1.01	0.00	0.00	0.09	-0.57
7 a	-1.06	0.09	0.00	0.00	1.12	-1.46
7 b	-0.55	0.39	0.00	0.00	0.93	-1.21
7 c	0.81	1.26	0.00	0.00	0.09	-0.55
8 top	-6.63	-4.06	0.00	0.00	8.23	-2.21
8 a	-6.14	-3.58	0.00	0.00	7.29	-1.98
8 b	-4.06	-1.46	0.00	0.00	3.83	-1.86
8 c	-2.01	0.29	0.00	0.00	1.20	-0.66
9 top	2.74	-3.43	0.00	0.00	14.67	-2.80
9 a	2.65	-3.00	0.00	0.00	13.07	-2.54
9 b	2.26	-1.11	0.00	0.00	6.79	-1.43
9 c	1.87	0.43	0.00	0.00	0.94	-0.33
10 top	-2.69	-3.61	0.00	0.00	19.49	-2.60
10 a	-2.57	-3.18	0.00	0.00	17.32	-2.24
10 b	-2.09	-1.25	0.00	0.00	9.00	-0.87
10 c	-1.62	0.35	0.00	0.00	1.48	-0.22
11 top	1.33	-3.33	0.00	0.00	3.65	-4.89
11 a	1.35	-2.92	0.00	0.00	3.16	-4.32
11 b	1.47	-1.10	0.00	0.00	1.27	-2.15
11 c	1.59	0.41	0.00	0.00	0.71	0.16

VEH: S2 - SPECIAL TR BRUG(5.75.44) page 56
date 11/09/2009; time 13:26:11
Cline Avenue - Load Rating - Double Box - 4 Webs - 71.105' W

Summary of the results (Minimum)

Section	--- Deadload ----		----- P.T. ------		--- Live load ---	
	Moment	Ax.Frc	Moment	Ax.Frc	Moment	Ax.Frc
1 a	-3.62	0.35	0.00	0.00	-1.90	0.14
1 b	-7.11	0.78	0.00	0.00	-6.99	0.37
1 c	-11.91	1.48	0.00	0.00	-12.54	0.89
1 right	-13.26	1.69	0.00	0.00	-15.00	1.10
2 left	-6.63	2.28	0.00	0.00	-9.52	-0.07
2 a	-5.69	2.07	0.00	0.00	-8.29	-0.45
2 b	-0.81	0.90	0.00	0.00	-1.24	0.11
2 c	-0.16	0.67	0.00	0.00	-1.53	0.61
2 right	-4.78	1.22	0.00	0.00	-7.59	0.09
3 left	-7.52	1.10	0.00	0.00	-18.62	-0.14
3 a	-6.39	0.85	0.00	0.00	-17.46	-0.20
3 b	0.13	-0.62	0.00	0.00	-8.34	-0.47
3 c	2.24	-1.25	0.00	0.00	-0.52	-0.21
3 right	-7.99	0.35	0.00	0.00	-18.07	-0.13
4 left	-5.30	0.49	0.00	0.00	-6.05	-1.63
4 a	-4.42	0.32	0.00	0.00	-4.66	-1.06
4 b	0.00	-0.48	0.00	0.00	-1.97	0.77
4 c	0.45	-0.52	0.00	0.00	-1.48	0.54
4 right	-4.89	0.79	0.00	0.00	-9.48	-0.36
5 left	-6.22	0.83	0.00	0.00	-6.63	0.74
5 a	-5.21	0.66	0.00	0.00	-4.92	0.55
5 b	-2.44	0.25	0.00	0.00	-0.63	0.18
5 c	-0.60	0.05	0.00	0.00	-0.08	0.03
6 a	-0.90	-0.35	0.00	0.00	-0.98	0.46
6 b	-0.40	-0.01	0.00	0.00	-0.85	0.44
6 c	0.84	1.01	0.00	0.00	-0.14	1.90
7 a	-1.06	0.09	0.00	0.00	-1.38	2.33
7 b	-0.55	0.39	0.00	0.00	-1.18	2.33
7 c	0.81	1.26	0.00	0.00	-0.14	1.93
8 top	-6.63	-4.06	0.00	0.00	-12.08	-5.19
8 a	-6.14	-3.58	0.00	0.00	-10.58	-4.60
8 b	-4.06	-1.46	0.00	0.00	-5.21	-2.29
8 c	-2.01	0.29	0.00	0.00	-0.74	0.17
9 top	2.74	-3.43	0.00	0.00	-19.06	-2.52
9 a	2.65	-3.00	0.00	0.00	-16.94	-2.17
9 b	2.26	-1.11	0.00	0.00	-8.78	-0.84
9 c	1.87	0.43	0.00	0.00	-1.45	-0.23
10 top	-2.69	-3.61	0.00	0.00	-14.19	-2.75
10 a	-2.57	-3.18	0.00	0.00	-12.64	-2.49
10 b	-2.09	-1.25	0.00	0.00	-6.56	-1.40
10 c	-1.62	0.35	0.00	0.00	-0.91	-0.32
11 top	1.33	-3.33	0.00	0.00	-8.18	-2.20
11 a	1.35	-2.92	0.00	0.00	-7.25	-1.98
11 b	1.47	-1.10	0.00	0.00	-3.82	-1.87
11 c	1.59	0.41	0.00	0.00	-1.23	-0.67

VEH: S3 - SPECIAL TR BRUG(5.75.44) page 55
date 11/09/2009; time 13:26:11
Cline Avenue - Load Rating - Double Box - 4 Webs - 71.105' W

Summary of the results (Maximum)

Section	Deadload Moment	Deadload Ax.Frc	P.T. Moment	P.T. Ax.Frc	Live load Moment	Live load Ax.Frc
1 a	-3.62	0.35	0.00	0.00	0.68	0.16
1 b	-7.11	0.78	0.00	0.00	0.44	0.40
1 c	-11.91	1.48	0.00	0.00	0.10	0.31
1 right	-13.26	1.69	0.00	0.00	0.14	0.35
2 left	-6.63	2.28	0.00	0.00	0.35	0.09
2 a	-5.69	2.07	0.00	0.00	1.06	1.94
2 b	-0.81	0.90	0.00	0.00	5.60	-0.37
2 c	-0.16	0.67	0.00	0.00	7.05	-1.20
2 right	-4.78	1.22	0.00	0.00	2.88	0.97
3 left	-7.52	1.10	0.00	0.00	17.55	1.46
3 a	-6.39	0.85	0.00	0.00	17.16	1.26
3 b	0.13	-0.62	0.00	0.00	12.04	0.21
3 c	2.24	-1.25	0.00	0.00	9.55	-0.63
3 right	-7.99	0.35	0.00	0.00	18.03	0.95
4 left	-5.30	0.49	0.00	0.00	2.91	0.74
4 a	-4.42	0.32	0.00	0.00	3.88	0.47
4 b	0.00	-0.48	0.00	0.00	7.18	-1.61
4 c	0.45	-0.52	0.00	0.00	7.12	-1.75
4 right	-4.89	0.79	0.00	0.00	0.40	0.05
5 left	-6.22	0.83	0.00	0.00	0.14	0.18
5 a	-5.21	0.66	0.00	0.00	0.11	0.14
5 b	-2.44	0.25	0.00	0.00	0.34	0.16
5 c	-0.60	0.05	0.00	0.00	0.13	0.02
6 a	-0.90	-0.35	0.00	0.00	2.49	-1.14
6 b	-0.40	-0.01	0.00	0.00	2.12	-0.63
6 c	0.84	1.01	0.00	0.00	0.12	-0.76
7 a	-1.06	0.09	0.00	0.00	1.52	-1.99
7 b	-0.55	0.39	0.00	0.00	1.28	-1.67
7 c	0.81	1.26	0.00	0.00	0.12	-0.74
8 top	-6.63	-4.06	0.00	0.00	11.09	-2.68
8 a	-6.14	-3.58	0.00	0.00	9.88	-2.40
8 b	-4.06	-1.46	0.00	0.00	5.25	-2.20
8 c	-2.01	0.29	0.00	0.00	1.61	-0.80
9 top	2.74	-3.43	0.00	0.00	19.34	-4.76
9 a	2.65	-3.00	0.00	0.00	17.26	-3.18
9 b	2.26	-1.11	0.00	0.00	9.02	-1.80
9 c	1.87	0.43	0.00	0.00	1.23	-0.52
10 top	-2.69	-3.61	0.00	0.00	25.22	-2.83
10 a	-2.57	-3.18	0.00	0.00	22.50	-2.44
10 b	-2.09	-1.25	0.00	0.00	11.78	-0.94
10 c	-1.62	0.35	0.00	0.00	1.97	-0.25
11 top	1.33	-3.33	0.00	0.00	4.97	-5.48
11 a	1.35	-2.92	0.00	0.00	4.32	-4.86
11 b	1.47	-1.10	0.00	0.00	1.76	-2.48
11 c	1.59	0.41	0.00	0.00	0.95	0.22

VEH: S3 - SPECIAL TR BRUG(5.75.44) page 56
date 11/09/2009; time 13:26:11
Cline Avenue - Load Rating - Double Box - 4 Webs - 71.105' W

Summary of the results (Minimum)

Section	Deadload Moment	Deadload Ax.Frc	P.T. Moment	P.T. Ax.Frc	Live load Moment	Live load Ax.Frc
1 a	-3.62	0.35	0.00	0.00	-2.80	0.22
1 b	-7.11	0.78	0.00	0.00	-9.13	0.54
1 c	-11.91	1.48	0.00	0.00	-16.27	1.16
1 right	-13.26	1.69	0.00	0.00	-19.18	1.40
2 left	-6.63	2.28	0.00	0.00	-12.15	-0.12
2 a	-5.69	2.07	0.00	0.00	-10.80	-0.59
2 b	-0.81	0.90	0.00	0.00	-1.75	0.23
2 c	-0.16	0.67	0.00	0.00	-2.03	0.78
2 right	-4.78	1.22	0.00	0.00	-9.83	0.16
3 left	-7.52	1.10	0.00	0.00	-24.33	-0.19
3 a	-6.39	0.85	0.00	0.00	-22.79	-0.27
3 b	0.13	-0.62	0.00	0.00	-10.66	-0.66
3 c	2.24	-1.25	0.00	0.00	-0.73	-0.33
3 right	-7.99	0.35	0.00	0.00	-23.63	-0.17
4 left	-5.30	0.49	0.00	0.00	-7.83	-2.16
4 a	-4.42	0.32	0.00	0.00	-6.06	-1.39
4 b	0.00	-0.48	0.00	0.00	-2.61	1.01
4 c	0.45	-0.52	0.00	0.00	-1.96	0.71
4 right	-4.89	0.79	0.00	0.00	-12.08	-0.56
5 left	-6.22	0.83	0.00	0.00	-7.75	0.85
5 a	-5.21	0.66	0.00	0.00	-5.83	0.65
5 b	-2.44	0.25	0.00	0.00	-0.86	0.22
5 c	-0.60	0.05	0.00	0.00	-0.09	0.04
6 a	-0.90	-0.35	0.00	0.00	-1.37	0.62
6 b	-0.40	-0.01	0.00	0.00	-1.18	0.59
6 c	0.84	1.01	0.00	0.00	-0.19	2.54
7 a	-1.06	0.09	0.00	0.00	-1.80	3.03
7 b	-0.55	0.39	0.00	0.00	-1.55	3.04
7 c	0.81	1.26	0.00	0.00	-0.19	2.57
8 top	-6.63	-4.06	0.00	0.00	-16.28	-5.96
8 a	-6.14	-3.58	0.00	0.00	-14.37	-5.30
8 b	-4.06	-1.46	0.00	0.00	-7.22	-2.70
8 c	-2.01	0.29	0.00	0.00	-0.98	0.23
9 top	2.74	-3.43	0.00	0.00	-24.67	-2.75
9 a	2.65	-3.00	0.00	0.00	-22.01	-2.37
9 b	2.26	-1.11	0.00	0.00	-11.50	-0.91
9 c	1.87	0.43	0.00	0.00	-1.94	-0.26
10 top	-2.69	-3.61	0.00	0.00	-18.73	-4.70
10 a	-2.57	-3.18	0.00	0.00	-16.71	-3.12
10 b	-2.09	-1.25	0.00	0.00	-8.73	-1.77
10 c	-1.62	0.35	0.00	0.00	-1.19	-0.51
11 top	1.33	-3.33	0.00	0.00	-11.03	-2.67
11 a	1.35	-2.92	0.00	0.00	-9.82	-2.40
11 b	1.47	-1.10	0.00	0.00	-5.24	-2.21
11 c	1.59	0.41	0.00	0.00	-1.65	-0.81

VEH: S4 - SUPER LOAD BRUG(5.75.44) page 55
date 11/09/2009; time 13:26:12
Cline Avenue - Load Rating - Double Box - 4 Webs - 71.105' W

Summary of the results (Maximum)

Section	--- Deadload ---		----- P.T. ------		--- Live load ---	
	Moment	Ax.Frc	Moment	Ax.Frc	Moment	Ax.Frc
1 a	-3.62	0.35	0.00	0.00	0.45	0.06
1 b	-7.11	0.78	0.00	0.00	0.31	0.15
1 c	-11.91	1.48	0.00	0.00	0.01	0.15
1 right	-13.26	1.69	0.00	0.00	0.01	0.17
2 left	-6.63	2.28	0.00	0.00	0.31	0.10
2 a	-5.69	2.07	0.00	0.00	1.14	1.30
2 b	-0.81	0.90	0.00	0.00	3.91	-0.34
2 c	-0.16	0.67	0.00	0.00	4.87	-0.96
2 right	-4.78	1.22	0.00	0.00	2.62	0.45
3 left	-7.52	1.10	0.00	0.00	14.52	0.93
3 a	-6.39	0.85	0.00	0.00	14.18	0.78
3 b	0.13	-0.62	0.00	0.00	9.51	0.05
3 c	2.24	-1.25	0.00	0.00	6.24	-0.45
3 right	-7.99	0.35	0.00	0.00	15.10	0.58
4 left	-5.30	0.49	0.00	0.00	2.65	0.29
4 a	-4.42	0.32	0.00	0.00	3.26	0.10
4 b	0.00	-0.48	0.00	0.00	5.16	-1.31
4 c	0.45	-0.52	0.00	0.00	4.93	-1.32
4 right	-4.89	0.79	0.00	0.00	0.35	0.05
5 left	-6.22	0.83	0.00	0.00	0.01	0.08
5 a	-5.21	0.66	0.00	0.00	0.01	0.07
5 b	-2.44	0.25	0.00	0.00	0.25	0.09
5 c	-0.60	0.05	0.00	0.00	0.10	0.01
6 a	-0.90	-0.35	0.00	0.00	1.89	-0.83
6 b	-0.40	-0.01	0.00	0.00	1.62	-0.49
6 c	0.84	1.01	0.00	0.00	0.09	-0.58
7 a	-1.06	0.09	0.00	0.00	1.09	-1.33
7 b	-0.55	0.39	0.00	0.00	0.93	-1.15
7 c	0.81	1.26	0.00	0.00	0.09	-0.56
8 top	-6.63	-4.06	0.00	0.00	7.89	-1.93
8 a	-6.14	-3.58	0.00	0.00	7.16	-2.30
8 b	-4.06	-1.46	0.00	0.00	3.70	-0.83
8 c	-2.01	0.29	0.00	0.00	1.22	-0.56
9 top	2.74	-3.43	0.00	0.00	14.43	-2.26
9 a	2.65	-3.00	0.00	0.00	12.93	-2.05
9 b	2.26	-1.11	0.00	0.00	6.84	-1.19
9 c	1.87	0.43	0.00	0.00	0.98	-0.34
10 top	-2.69	-3.61	0.00	0.00	19.30	-1.62
10 a	-2.57	-3.18	0.00	0.00	17.24	-1.40
10 b	-2.09	-1.25	0.00	0.00	9.06	-0.48
10 c	-1.62	0.35	0.00	0.00	1.52	-0.11
11 top	1.33	-3.33	0.00	0.00	3.64	-3.78
11 a	1.35	-2.92	0.00	0.00	3.16	-3.39
11 b	1.47	-1.10	0.00	0.00	1.27	-1.74
11 c	1.59	0.41	0.00	0.00	0.73	0.17

VEH: S4 - SUPER LOAD BRUG(5.75.44) page 56
date 11/09/2009; time 13:26:12
Cline Avenue - Load Rating - Double Box - 4 Webs - 71.105' W

Summary of the results (Minimum)

Section	--- Deadload ---		----- P.T. ------		--- Live load ---	
	Moment	Ax.Frc	Moment	Ax.Frc	Moment	Ax.Frc
1 a	-3.62	0.35	0.00	0.00	-1.77	0.11
1 b	-7.11	0.78	0.00	0.00	-5.84	0.29
1 c	-11.91	1.48	0.00	0.00	-10.46	0.68
1 right	-13.26	1.69	0.00	0.00	-12.41	0.84
2 left	-6.63	2.28	0.00	0.00	-8.49	-0.40
2 a	-5.69	2.07	0.00	0.00	-7.57	-0.46
2 b	-0.81	0.90	0.00	0.00	-1.33	0.10
2 c	-0.16	0.67	0.00	0.00	-1.55	0.62
2 right	-4.78	1.22	0.00	0.00	-6.09	-0.14
3 left	-7.52	1.10	0.00	0.00	-17.86	-0.18
3 a	-6.39	0.85	0.00	0.00	-16.79	-0.23
3 b	0.13	-0.62	0.00	0.00	-8.56	-0.45
3 c	2.24	-1.25	0.00	0.00	-0.52	-0.19
3 right	-7.99	0.35	0.00	0.00	-17.28	-0.16
4 left	-5.30	0.49	0.00	0.00	-4.58	-1.75
4 a	-4.42	0.32	0.00	0.00	-3.68	-1.08
4 b	0.00	-0.48	0.00	0.00	-2.00	0.75
4 c	0.45	-0.52	0.00	0.00	-1.50	0.55
4 right	-4.89	0.79	0.00	0.00	-8.44	-0.64
5 left	-6.22	0.83	0.00	0.00	-5.04	0.53
5 a	-5.21	0.66	0.00	0.00	-3.72	0.39
5 b	-2.44	0.25	0.00	0.00	-0.47	0.12
5 c	-0.60	0.05	0.00	0.00	-0.03	0.02
6 a	-0.90	-0.35	0.00	0.00	-1.00	0.48
6 b	-0.40	-0.01	0.00	0.00	-0.86	0.45
6 c	0.84	1.01	0.00	0.00	-0.14	1.71
7 a	-1.06	0.09	0.00	0.00	-1.39	2.29
7 b	-0.55	0.39	0.00	0.00	-1.21	2.25
7 c	0.81	1.26	0.00	0.00	-0.15	1.74
8 top	-6.63	-4.06	0.00	0.00	-11.18	-3.95
8 a	-6.14	-3.58	0.00	0.00	-9.89	-3.54
8 b	-4.06	-1.46	0.00	0.00	-4.98	-1.81
8 c	-2.01	0.29	0.00	0.00	-0.76	0.18
9 top	2.74	-3.43	0.00	0.00	-18.86	-1.58
9 a	2.65	-3.00	0.00	0.00	-16.85	-1.37
9 b	2.26	-1.11	0.00	0.00	-8.83	-0.47
9 c	1.87	0.43	0.00	0.00	-1.49	-0.12
10 top	-2.69	-3.61	0.00	0.00	-13.92	-2.20
10 a	-2.57	-3.18	0.00	0.00	-12.48	-2.01
10 b	-2.09	-1.25	0.00	0.00	-6.60	-1.16
10 c	-1.62	0.35	0.00	0.00	-0.95	-0.32
11 top	1.33	-3.33	0.00	0.00	-7.85	-1.92
11 a	1.35	-2.92	0.00	0.00	-7.12	-2.30
11 b	1.47	-1.10	0.00	0.00	-3.69	-0.84
11 c	1.59	0.41	0.00	0.00	-1.25	-0.57

VEH: S5 - SUPERLOAD BRUG(5.75.44) page 55
date 11/09/2009; time 13:26:13
Cline Avenue - Load Rating - Double Box - 4 Webs - 71.105' W

Summary of the results (Maximum)

Section	--- Deadload ----		----- P.T. ------		--- Live load ---	
	Moment	Ax.Frc	Moment	Ax.Frc	Moment	Ax.Frc
1 a	-3.62	0.35	0.00	0.00	0.81	0.12
1 b	-7.11	0.78	0.00	0.00	0.52	0.33
1 c	-11.91	1.48	0.00	0.00	0.08	0.28
1 right	-13.26	1.69	0.00	0.00	0.11	0.32
2 left	-6.63	2.28	0.00	0.00	0.39	0.14
2 a	-5.69	2.07	0.00	0.00	0.98	1.77
2 b	-0.81	0.90	0.00	0.00	5.31	-0.47
2 c	-0.16	0.67	0.00	0.00	6.72	-1.29
2 right	-4.78	1.22	0.00	0.00	2.65	0.63
3 left	-7.52	1.10	0.00	0.00	18.05	1.28
3 a	-6.39	0.85	0.00	0.00	17.74	1.07
3 b	0.13	-0.62	0.00	0.00	12.33	0.02
3 c	2.24	-1.25	0.00	0.00	8.94	-0.68
3 right	-7.99	0.35	0.00	0.00	18.73	0.88
4 left	-5.30	0.49	0.00	0.00	2.69	0.44
4 a	-4.42	0.32	0.00	0.00	3.74	0.20
4 b	0.00	-0.48	0.00	0.00	6.92	-1.70
4 c	0.45	-0.52	0.00	0.00	6.79	-1.73
4 right	-4.89	0.79	0.00	0.00	0.45	0.07
5 left	-6.22	0.83	0.00	0.00	0.11	0.16
5 a	-5.21	0.66	0.00	0.00	0.08	0.12
5 b	-2.44	0.25	0.00	0.00	0.40	0.15
5 c	-0.60	0.05	0.00	0.00	0.16	0.02
6 a	-0.90	-0.35	0.00	0.00	2.36	-1.01
6 b	-0.40	-0.01	0.00	0.00	2.01	-0.53
6 c	0.84	1.01	0.00	0.00	0.12	-0.77
7 a	-1.06	0.09	0.00	0.00	1.39	-1.74
7 b	-0.55	0.39	0.00	0.00	1.16	-1.61
7 c	0.81	1.26	0.00	0.00	0.11	-0.74
8 top	-6.63	-4.06	0.00	0.00	10.12	-2.64
8 a	-6.14	-3.58	0.00	0.00	8.98	-2.37
8 b	-4.06	-1.46	0.00	0.00	4.71	-2.19
8 c	-2.01	0.29	0.00	0.00	1.52	-0.79
9 top	2.74	-3.43	0.00	0.00	18.59	-3.42
9 a	2.65	-3.00	0.00	0.00	16.58	-3.10
9 b	2.26	-1.11	0.00	0.00	8.68	-1.64
9 c	1.87	0.43	0.00	0.00	1.24	-0.42
10 top	-2.69	-3.61	0.00	0.00	24.90	-2.73
10 a	-2.57	-3.18	0.00	0.00	22.16	-2.35
10 b	-2.09	-1.25	0.00	0.00	11.56	-0.87
10 c	-1.62	0.35	0.00	0.00	1.90	-0.22
11 top	1.33	-3.33	0.00	0.00	4.52	-5.62
11 a	1.35	-2.92	0.00	0.00	3.91	-4.98
11 b	1.47	-1.10	0.00	0.00	1.56	-2.50
11 c	1.59	0.41	0.00	0.00	0.91	0.21

VEH: S5 - SUPERLOAD BRUG(5.75.44) page 56
date 11/09/2009; time 13:26:13
Cline Avenue - Load Rating - Double Box - 4 Webs - 71.105' W

Summary of the results (Minimum)

Section	--- Deadload ----		----- P.T. ------		--- Live load ---	
	Moment	Ax.Frc	Moment	Ax.Frc	Moment	Ax.Frc
1 a	-3.62	0.35	0.00	0.00	-2.31	0.16
1 b	-7.11	0.78	0.00	0.00	-8.26	0.42
1 c	-11.91	1.48	0.00	0.00	-14.81	1.00
1 right	-13.26	1.69	0.00	0.00	-17.66	1.24
2 left	-6.63	2.28	0.00	0.00	-11.37	-0.13
2 a	-5.69	2.07	0.00	0.00	-10.08	-0.59
2 b	-0.81	0.90	0.00	0.00	-1.54	0.07
2 c	-0.16	0.67	0.00	0.00	-1.96	0.79
2 right	-4.78	1.22	0.00	0.00	-8.79	0.03
3 left	-7.52	1.10	0.00	0.00	-23.40	-0.19
3 a	-6.39	0.85	0.00	0.00	-22.03	-0.30
3 b	0.13	-0.62	0.00	0.00	-10.91	-0.57
3 c	2.24	-1.25	0.00	0.00	-0.64	-0.20
3 right	-7.99	0.35	0.00	0.00	-22.67	-0.19
4 left	-5.30	0.49	0.00	0.00	-6.75	-2.17
4 a	-4.42	0.32	0.00	0.00	-5.32	-1.36
4 b	0.00	-0.48	0.00	0.00	-2.55	0.97
4 c	0.45	-0.52	0.00	0.00	-1.89	0.69
4 right	-4.89	0.79	0.00	0.00	-11.33	-0.47
5 left	-6.22	0.83	0.00	0.00	-7.68	0.84
5 a	-5.21	0.66	0.00	0.00	-5.70	0.62
5 b	-2.44	0.25	0.00	0.00	-0.76	0.20
5 c	-0.60	0.05	0.00	0.00	-0.09	0.03
6 a	-0.90	-0.35	0.00	0.00	-1.22	0.58
6 b	-0.40	-0.01	0.00	0.00	-1.05	0.56
6 c	0.84	1.01	0.00	0.00	-0.18	2.34
7 a	-1.06	0.09	0.00	0.00	-1.77	2.97
7 b	-0.55	0.39	0.00	0.00	-1.52	2.95
7 c	0.81	1.26	0.00	0.00	-0.18	2.37
8 top	-6.63	-4.06	0.00	0.00	-14.64	-5.95
8 a	-6.14	-3.58	0.00	0.00	-12.84	-5.29
8 b	-4.06	-1.46	0.00	0.00	-6.35	-2.67
8 c	-2.01	0.29	0.00	0.00	-0.95	0.22
9 top	2.74	-3.43	0.00	0.00	-24.34	-2.65
9 a	2.65	-3.00	0.00	0.00	-21.66	-2.28
9 b	2.26	-1.11	0.00	0.00	-11.28	-0.85
9 c	1.87	0.43	0.00	0.00	-1.86	-0.23
10 top	-2.69	-3.61	0.00	0.00	-17.95	-3.35
10 a	-2.57	-3.18	0.00	0.00	-16.00	-3.04
10 b	-2.09	-1.25	0.00	0.00	-8.37	-1.61
10 c	-1.62	0.35	0.00	0.00	-1.20	-0.40
11 top	1.33	-3.33	0.00	0.00	-10.06	-2.64
11 a	1.35	-2.92	0.00	0.00	-8.94	-2.37
11 b	1.47	-1.10	0.00	0.00	-4.70	-2.20
11 c	1.59	0.41	0.00	0.00	-1.56	-0.80

4.7.4 Brug Input Striped Lanes

1_III_B_SL_HL93_truck_EL.txt 9/11/2009

```
* start ; column 11-30 can be used to have your own text on the top of each page
*   5   10   15   20   25   30   35   40   45   50   55   60   65   70   75   80
*   V    V    V    V    V    V    V    V    V    V    V    V    V    V    V    V
00001  1 1     VEH: HL93- TRUCK - SINGLE TRUCK
* code 1001
Cline Avenue - Striped Lanes - Double Box - 4 Webs - 71.105' Wide - Single Vehicle
* code 1002
    2         1
* code 1003
*   5   10   15   20   25   30   35   40   45   50   55   60   65   70   75   80
*   V    V    V    V    V    V    V    V    V    V    V    V    V    V    V    V
250.0     170.0     71.1050   1.0       1.0       1.3
* code 1004
    1    0    2
* code 1005
   72    1
* code 1005a
* location traffic lanes
13.958
* maximum and minimum truck
11.708    59.188    10.000
* code 1007, linear loads
0.7350    0.441
70.37     0.441
* code 1201
   10    6    5    2    4
* code 1202 coordinates
0.0000    0.0
10.7917   0.0
10.7917   -9.0005
26.6250   0.0
26.6250   -9.0005
49.0217   0.0
49.0217   -9.0005
64.8550   0.0
64.8550   -9.0005
71.1050   0.0
* code 1203 - profile 1
    5    2    3    4
0.0000    0.750
5.2083    0.750
7.7083    1.208
10.2083   1.667
10.7917   1.667
* code 1203 - profile 2
    7    2    3    4
0.0000    1.667
0.5833    1.667
5.5833    0.750
7.9167    0.750
10.2500   0.750
15.2500   1.667
15.8333   1.667
* code 1203 - profile 3
    7    2    3    4
0.0000    1.667
0.5833    1.667
5.5833    0.750
11.1983   0.750
16.8133   0.750
21.8133   1.667
22.3967   1.667
* code 1203 - profile 4
    5    2    3    4
0.0000    1.667
0.5833    1.667
2.5833    1.343
4.5833    1.020
6.2500    0.750
* code 1203 - profile 5
    7    2    3    4
0.0000    1.458
0.5833    1.458
1.5833    0.458
7.9167    0.458
14.2500   0.458
15.2500   1.458
15.8333   1.458
* code 1203 - profile 6
    5    2    3    4
0.0000    1.167
```

```
0.8334    1.167
4.3204    1.167
7.7714    1.167
9.0005    1.167
* code 1204 - assembling boxgirder
    1    2    1
    2    4    2
    4    6    3
    6    8    2
    8   10    4
    3    5    5
    7    9    5
    2    3    6
    4    5    6
    6    7    6
    8    9    6
* code 1205 control code
    1    2   13    1    1    0    4    3     1.0       1.0
* code 1206 wheels/axle
       0.0
       1.5
       6.0
       7.5 0.833
* code 1207 definition axles
0.0       0.1
14.0      0.4
28.0      0.4
* code 1208 - accuracy
0.00001   0.00001   0.00001   .00001    .00001
* code 1209 number sections
   45
   1A   1B   1C   1R   2L   2A   2B   2C   2R   3L   3A   3B   3C   3R
   4L   4A   4B   4C   4R   5L   5A   5B   5C
   6A   6B   6C   7A   7B   7C   8L   8A   8B   8C   9L   9A   9B   9C
  10L  10A  10B  10C  11L  11A  11B  11C
* code 1210 - density conrete
0.156
* code 1211 - extra forces selfweight

* code 1212 - surcharge
1.777
* code 1213 - Prestressing Layout - NONE
•
```

1_III_B_SL_HL93_tandem_EL.txt 9/11/2009

```
* start ; column 11-30 can be used to have your own text on the top of each page
*   5   10   15   20   25   30   35   40   45   50   55   60   65   70   75   80
*   V    V    V    V    V    V    V    V    V    V    V    V    V    V    V    V
00001  1 1     VEH: HL93- TANDEM- SINGLE TRUCK
* code 1001
Cline Avenue - Striped Lanes - Double Box - 4 Webs - 71.105' Wide - Single Vehicle
* code 1002
    2         1
* code 1003
*   5   10   15   20   25   30   35   40   45   50   55   60   65   70   75   80
*   V    V    V    V    V    V    V    V    V    V    V    V    V    V    V    V
250.0     170.0     71.1050   1.0       1.0       1.3
* code 1004
    1    0    2
* code 1005
   50    1
* code 1005a
* location traffic lanes
13.958
* maximum and minimum truck
11.708    59.188    10.000
* code 1007, linear loads
0.7350    0.441
70.37     0.441
* code 1201
   10    6    5    2    4
* code 1202 coordinates
0.0000    0.0
10.7917   0.0
10.7917   -9.0005
26.6250   0.0
26.6250   -9.0005
49.0217   0.0
49.0217   -9.0005
64.8550   0.0
64.8550   -9.0005
71.1050   0.0
* code 1203 - profile 1
    5    2    3    4
0.0000    0.750
5.2083    0.750
7.7083    1.208
10.2083   1.667
10.7917   1.667
* code 1203 - profile 2
    7    2    3    4
0.0000    1.667
0.5833    1.667
5.5833    0.750
7.9167    0.750
10.2500   0.750
15.2500   1.667
15.8333   1.667
* code 1203 - profile 3
    7    2    3    4
0.0000    1.667
0.5833    1.667
5.5833    0.750
11.1983   0.750
16.8133   0.750
21.8133   1.667
22.3967   1.667
* code 1203 - profile 4
    5    2    3    4
0.0000    1.667
0.5833    1.667
2.5833    1.343
4.5833    1.020
6.2500    0.750
* code 1203 - profile 5
    7    2    3    4
0.0000    1.458
0.5833    1.458
1.5833    0.458
7.9167    0.458
14.2500   0.458
15.2500   1.458
15.8333   1.458
* code 1203 - profile 6
    5    2    3    4
0.0000    1.167
```

1_III_B_SL_HL93_tandem_EL.txt 9/11/2009

```
0.8334    1.167
4.3204    1.167
7.7714    1.167
9.0005    1.167
* code 1204 - assembling boxgirder
    1    2    1
    2    4    2
    4    6    3
    6    8    2
    8   10    4
    3    5    5
    7    9    5
    2    3    6
    4    5    6
    6    7    6
    8    9    6
* code 1205 control code
    1    2   13    1    1    0    4    2     1.0       1.0
* code 1206 wheels/axle
       0.0
       1.5
       6.0
       7.5 0.833
* code 1207 definition axles
0.0       0.5
4.0       0.5
* code 1208 - accuracy
0.00001   0.00001   0.00001   .00001    .00001
* code 1209 number sections
   45
   1A   1B   1C   1R   2L   2A   2B   2C   2R   3L   3A   3B   3C   3R
   4L   4A   4B   4C   4R   5L   5A   5B   5C
   6A   6B   6C   7A   7B   7C   8L   8A   8B   8C   9L   9A   9B   9C
  10L  10A  10B  10C  11L  11A  11B  11C
* code 1210 - density conrete
0.156
* code 1211 - extra forces selfweight

* code 1212 - surcharge
1.777
* code 1213 - Prestressing Layout - NONE
```

```
* start ; column 11-30 can be used to have your own text on the top of each page
00001    0    0
* code 1001
Cline Avenue - Striped Lanes - Double Box - 4 Webs - 71.105' Wide - Single Vehicle
* code 1002
    2         1
* code 1003
*   5   10   15   20   25   30   35   40   45   50   55   60   65   70   75   80
*   V    V    V    V    V    V    V    V    V    V    V    V    V    V    V    V
250.0     170.0     71.1050   1.0       1.0       1.3
* code 1004
    2    0    2
* code 1005
   72
* code 1005a
* location traffic lanes
13.958    26.000
* maximum and minimum truck
11.708    59.188    10.000
* code 1007, linear loads
0.7350    0.441
70.37     0.441
* code 1201
   10    6    5    2    4
* code 1202 coordinates
0.0000    0.0
10.7917   0.0
10.7917   -9.0005
26.6250   0.0
26.6250   -9.0005
49.0217   0.0
49.0217   -9.0005
64.8550   0.0
64.8550   -9.0005
71.1050   0.0
* code 1203 - profile 1
    5    2    3    4
0.0000    0.750
5.2083    0.750
7.7083    1.208
10.2083   1.667
10.7917   1.667
* code 1203 - profile 2
    7    2    3    4
0.0000    1.667
0.5833    1.667
5.5833    0.750
7.9167    0.750
10.2500   0.750
15.2500   1.667
15.8333   1.667
* code 1203 - profile 3
    7    2    3    4
0.0000    1.667
0.5833    1.667
5.5833    0.750
11.1983   0.750
16.8133   0.750
21.8133   1.667
22.3967   1.667
* code 1203 - profile 4
    5    2    3    4
0.0000    1.667
0.5833    1.667
2.5833    1.343
4.5833    1.020
6.2500    0.750
* code 1203 - profile 5
    7    2    3    4
0.0000    1.458
0.5833    1.458
1.5833    0.458
7.9167    0.458
14.2500   0.458
15.2500   1.458
15.8333   1.458
* code 1203 - profile 6
    5    2    3    4
0.0000    1.167
0.8334    1.167
4.3204    1.167
```

```
7.7714    1.167
9.0005    1.167
* code 1204 - assembling boxgirder
    1    2    1
    2    4    2
    4    6    3
    6    8    2
    8   10    4
    3    5    5
    7    9    5
    2    3    6
    4    5    6
    6    7    6
    8    9    6
* code 1205 control code
    1    2   13    1    1    0    4    3     1.0       1.0
* code 1206 wheels/axle
       0.0
       1.5
       6.0
       7.5 0.833
* code 1207 definition axles
0.0       0.1
14.0      0.4
28.0      0.4
* code 1208 - accuracy
0.00001   0.00001   0.00001   .00001    .00001
* code 1209 number sections
   45
   1A   1B   1C   1R   2L   2A   2B   2C   2R   3L   3A   3B   3C   3R
   4L   4A   4B   4C   4R   5L   5A   5B   5C
   6A   6B   6C   7A   7B   7C   8L   8A   8B   8C   9L   9A   9B   9C
  10L  10A  10B  10C  11L  11A  11B  11C
* code 1210 - density conrete
0.156
* code 1211 - extra forces selfweight

* code 1212 - surcharge
1.777
* code 1213 - Prestressing Layout - NONE
•
```

```
* start ; column 11-30 can be used to have your own text on the top of each page
*   5   10   15   20   25   30   35   40   45   50   55   60   65   70   75   80
*   V    V    V    V    V    V    V    V    V    V    V    V    V    V    V    V
00001  1 1     VEH: HL93- TANDEM
* code 1001
Cline Avenue - Striped Lanes - Double Box - 4 Webs - 71.105' Wide - Single Vehicle
* code 1002
    2         1
* code 1003
*   5   10   15   20   25   30   35   40   45   50   55   60   65   70   75   80
*   V    V    V    V    V    V    V    V    V    V    V    V    V    V    V    V
250.0     170.0     71.1050   1.0       1.0       1.3
* code 1004
    2    0    2
* code 1005
   50
* code 1005a
* location traffic lanes
13.958    26.000
* maximum and minimum truck
11.708    59.188    10.000
* code 1007, linear loads
0.7350    0.441
70.37     0.441
* code 1201
   10    6    5    2    4
* code 1202 coordinates
0.0000    0.0
10.7917   0.0
10.7917   -9.0005
26.6250   0.0
26.6250   -9.0005
49.0217   0.0
49.0217   -9.0005
64.8550   0.0
64.8550   -9.0005
71.1050   0.0
* code 1203 - profile 1
    5    2    3    4
0.0000    0.750
5.2083    0.750
7.7083    1.208
10.2083   1.667
10.7917   1.667
* code 1203 - profile 2
    7    2    3    4
0.0000    1.667
0.5833    1.667
5.5833    0.750
7.9167    0.750
10.2500   0.750
15.2500   1.667
15.8333   1.667
* code 1203 - profile 3
    7    2    3    4
0.0000    1.667
0.5833    1.667
5.5833    0.750
11.1983   0.750
16.8133   0.750
21.8133   1.667
22.3967   1.667
* code 1203 - profile 4
    5    2    3    4
0.0000    1.667
0.5833    1.667
2.5833    1.343
4.5833    1.020
6.2500    0.750
* code 1203 - profile 5
    7    2    3    4
0.0000    1.458
0.5833    1.458
1.5833    0.458
7.9167    0.458
14.2500   0.458
15.2500   1.458
15.8333   1.458
* code 1203 - profile 6
    5    2    3    4
0.0000    1.167
```

```
0.8334    1.167
4.3204    1.167
7.7714    1.167
9.0005    1.167
* code 1204 - assembling boxgirder
    1    2    1
    2    4    2
    4    6    3
    6    8    2
    8   10    4
    3    5    5
    7    9    5
    2    3    6
    4    5    6
    6    7    6
    8    9    6
* code 1205 control code
    1    2   13    1    1    0    4    2     1.0       1.0
* code 1206 wheels/axle
       0.0
       1.5
       6.0
       7.5 0.833
* code 1207 definition axles
0.0       0.5
4.0       0.5
* code 1208 - accuracy
0.00001   0.00001   0.00001   .00001    .00001
* code 1209 number sections
   45
   1A   1B   1C   1R   2L   2A   2B   2C   2R   3L   3A   3B   3C   3R
   4L   4A   4B   4C   4R   5L   5A   5B   5C
   6A   6B   6C   7A   7B   7C   8L   8A   8B   8C   9L   9A   9B   9C
  10L  10A  10B  10C  11L  11A  11B  11C
* code 1210 - density conrete
0.156
* code 1211 - extra forces selfweight

* code 1212 - surcharge
1.777
* code 1213 - Prestressing Layout - NONE
```

4.7.5 Brug Output Striped Lanes (Summary)

1_III_B_SL_HL93_truck_EL.OUT 9/11/2009

VEH: HL93- TRUCK - S BRUG(5.75.44) page 55
date 11/09/2009; time 14:42:55
Cline Avenue - Striped Lanes - Double Box - 4 Webs - 71.105'

Summary of the results (Maximum)

Section	--- Deadload ----		----- P.T. ------		--- Live load ---	
	Moment	Ax.Frc	Moment	Ax.Frc	Moment	Ax.Frc
1 a	-3.62	0.35	0.00	0.00	0.09	0.07
1 b	-7.11	0.78	0.00	0.00	0.96	0.20
1 c	-11.91	1.48	0.00	0.00	-0.01	0.00
1 right	-13.26	1.69	0.00	0.00	-0.01	0.00
2 left	-6.63	2.28	0.00	0.00	0.03	-0.01
2 a	-5.69	2.07	0.00	0.00	0.01	-0.01
2 b	-0.81	0.90	0.00	0.00	3.77	-0.02
2 c	-0.16	0.67	0.00	0.00	4.20	-0.34
2 right	-4.78	1.22	0.00	0.00	-0.03	1.29
3 left	-7.52	1.10	0.00	0.00	2.49	0.22
3 a	-6.39	0.85	0.00	0.00	2.85	0.85
3 b	0.13	-0.62	0.00	0.00	4.50	0.13
3 c	2.24	-1.25	0.00	0.00	5.69	-0.15
3 right	-7.99	0.35	0.00	0.00	2.25	0.99
4 left	-5.30	0.49	0.00	0.00	-0.02	1.19
4 a	-4.42	0.32	0.00	0.00	1.39	0.83
4 b	0.00	-0.48	0.00	0.00	4.06	-0.16
4 c	0.45	-0.52	0.00	0.00	4.22	-0.50
4 right	-4.89	0.79	0.00	0.00	0.17	0.01
5 left	-6.22	0.83	0.00	0.00	0.12	0.05
5 a	-5.21	0.66	0.00	0.00	0.09	0.04
5 b	-2.44	0.25	0.00	0.00	0.03	0.02
5 c	-0.60	0.05	0.00	0.00	0.01	0.00
6 a	-0.90	-0.35	0.00	0.00	0.57	-0.14
6 b	-0.40	-0.01	0.00	0.00	0.48	0.01
6 c	0.84	1.01	0.00	0.00	0.03	-0.18
7 a	-1.06	0.09	0.00	0.00	0.45	-0.60
7 b	-0.55	0.39	0.00	0.00	0.36	-0.48
7 c	0.81	1.26	0.00	0.00	0.03	-0.18
8 top	-6.63	-4.06	0.00	0.00	4.54	-1.91
8 a	-6.14	-3.58	0.00	0.00	3.93	-1.68
8 b	-4.06	-1.46	0.00	0.00	2.00	-0.78
8 c	-2.01	0.29	0.00	0.00	0.52	-0.23
9 top	2.74	-3.43	0.00	0.00	6.35	-3.15
9 a	2.65	-3.00	0.00	0.00	5.43	-2.76
9 b	2.26	-1.11	0.00	0.00	2.56	-1.29
9 c	1.87	0.43	0.00	0.00	0.31	-0.19
10 top	-2.69	-3.61	0.00	0.00	6.86	-1.59
10 a	-2.57	-3.18	0.00	0.00	6.01	-1.39
10 b	-2.09	-1.25	0.00	0.00	3.04	-0.59
10 c	-1.62	0.35	0.00	0.00	0.58	-0.33
11 top	1.33	-3.33	0.00	0.00	0.09	0.07
11 a	1.35	-2.92	0.00	0.00	0.10	0.07
11 b	1.47	-1.10	0.00	0.00	0.16	0.08
11 c	1.59	0.41	0.00	0.00	0.26	0.06

1_III_B_SL_HL93_truck_EL.OUT 9/11/2009

VEH: HL93- TRUCK - S BRUG(5.75.44) page 56
date 11/09/2009; time 14:42:55
Cline Avenue - Striped Lanes - Double Box - 4 Webs - 71.105'

Summary of the results (Minimum)

Section	--- Deadload ----		----- P.T. ------		--- Live load ---	
	Moment	Ax.Frc	Moment	Ax.Frc	Moment	Ax.Frc
1 a	-3.62	0.35	0.00	0.00	-0.09	0.07
1 b	-7.11	0.78	0.00	0.00	-0.25	0.19
1 c	-11.91	1.48	0.00	0.00	-3.07	0.64
1 right	-13.26	1.69	0.00	0.00	-5.26	0.92
2 left	-6.63	2.28	0.00	0.00	-6.16	-0.08
2 a	-5.69	2.07	0.00	0.00	-5.43	-0.15
2 b	-0.81	0.90	0.00	0.00	-0.72	-0.25
2 c	-0.16	0.67	0.00	0.00	-0.55	0.25
2 right	-4.78	1.22	0.00	0.00	-5.61	-0.29
3 left	-7.52	1.10	0.00	0.00	-9.01	0.29
3 a	-6.39	0.85	0.00	0.00	-7.93	0.23
3 b	0.13	-0.62	0.00	0.00	-2.87	-0.16
3 c	2.24	-1.25	0.00	0.00	-0.19	-0.17
3 right	-7.99	0.35	0.00	0.00	-8.90	0.25
4 left	-5.30	0.49	0.00	0.00	-5.62	-0.47
4 a	-4.42	0.32	0.00	0.00	-4.95	-0.52
4 b	0.00	-0.48	0.00	0.00	-0.78	0.33
4 c	0.45	-0.52	0.00	0.00	-0.54	0.23
4 right	-4.89	0.79	0.00	0.00	-6.14	-0.23
5 left	-6.22	0.83	0.00	0.00	-1.66	0.44
5 a	-5.21	0.66	0.00	0.00	-1.15	0.31
5 b	-2.44	0.25	0.00	0.00	-0.31	0.09
5 c	-0.60	0.05	0.00	0.00	-0.06	0.02
6 a	-0.90	-0.35	0.00	0.00	-0.37	0.23
6 b	-0.40	-0.01	0.00	0.00	-0.32	0.23
6 c	0.84	1.01	0.00	0.00	-0.06	0.82
7 a	-1.06	0.09	0.00	0.00	-0.39	0.82
7 b	-0.55	0.39	0.00	0.00	-0.33	0.85
7 c	0.81	1.26	0.00	0.00	-0.06	0.83
8 top	-6.63	-4.06	0.00	0.00	-1.72	-7.01
8 a	-6.14	-3.58	0.00	0.00	-1.45	-5.92
8 b	-4.06	-1.46	0.00	0.00	-0.52	-2.36
8 c	-2.01	0.29	0.00	0.00	-0.27	0.06
9 top	2.74	-3.43	0.00	0.00	-6.74	-1.60
9 a	2.65	-3.00	0.00	0.00	-5.90	-1.39
9 b	2.26	-1.11	0.00	0.00	-2.98	-0.59
9 c	1.87	0.43	0.00	0.00	-0.58	-0.34
10 top	-2.69	-3.61	0.00	0.00	-6.25	-3.14
10 a	-2.57	-3.18	0.00	0.00	-5.34	-2.75
10 b	-2.09	-1.25	0.00	0.00	-2.51	-1.28
10 c	-1.62	0.35	0.00	0.00	-0.30	-0.19
11 top	1.33	-3.33	0.00	0.00	-4.53	-1.91
11 a	1.35	-2.92	0.00	0.00	-3.92	-1.68
11 b	1.47	-1.10	0.00	0.00	-2.00	-0.78
11 c	1.59	0.41	0.00	0.00	-0.55	-0.32

1_III_B_SL_HL93_tandem_EL.OUT 9/11/2009

VEH: HL93- TANDEM- S BRUG(5.75.44) page 55
date 11/09/2009; time 14:42:54
Cline Avenue - Striped Lanes - Double Box - 4 Webs - 71.105'

Summary of the results (Maximum)

Section	--- Deadload ---		----- P.T. ------		--- Live load ---	
	Moment	Ax.Frc	Moment	Ax.Frc	Moment	Ax.Frc
1 a	-3.62	0.35	0.00	0.00	0.12	0.09
1 b	-7.11	0.78	0.00	0.00	0.54	0.27
1 c	-11.91	1.48	0.00	0.00	-0.01	0.00
1 right	-13.26	1.69	0.00	0.00	-0.01	0.00
2 left	-6.63	2.28	0.00	0.00	0.01	-0.01
2 a	-5.69	2.07	0.00	0.00	-0.01	-0.01
2 b	-0.81	0.90	0.00	0.00	3.30	-0.02
2 c	-0.16	0.67	0.00	0.00	3.77	-0.32
2 right	-4.78	1.22	0.00	0.00	-0.36	0.05
3 left	-7.52	1.10	0.00	0.00	1.39	0.17
3 a	-6.39	0.85	0.00	0.00	1.42	0.14
3 b	0.13	-0.62	0.00	0.00	3.63	0.10
3 c	2.24	-1.25	0.00	0.00	5.29	-0.19
3 right	-7.99	0.35	0.00	0.00	0.47	0.96
4 left	-5.30	0.49	0.00	0.00	-0.40	0.11
4 a	-4.42	0.32	0.00	0.00	-0.15	0.95
4 b	0.00	-0.48	0.00	0.00	3.52	-0.11
4 c	0.45	-0.52	0.00	0.00	3.78	-0.45
4 right	-4.89	0.79	0.00	0.00	0.31	0.00
5 left	-6.22	0.83	0.00	0.00	0.23	0.02
5 a	-5.21	0.66	0.00	0.00	0.18	0.02
5 b	-2.44	0.25	0.00	0.00	0.06	0.01
5 c	-0.60	0.05	0.00	0.00	0.01	0.00
6 a	-0.90	-0.35	0.00	0.00	0.42	-0.05
6 b	-0.40	-0.01	0.00	0.00	0.35	0.12
6 c	0.84	1.01	0.00	0.00	0.03	-0.11
7 a	-1.06	0.09	0.00	0.00	0.42	-0.63
7 b	-0.55	0.39	0.00	0.00	0.31	-0.48
7 c	0.81	1.26	0.00	0.00	0.03	-0.10
8 top	-6.63	-4.06	0.00	0.00	4.45	-2.13
8 a	-6.14	-3.58	0.00	0.00	3.80	-1.90
8 b	-4.06	-1.46	0.00	0.00	1.80	-0.94
8 c	-2.01	0.29	0.00	0.00	0.39	-0.27
9 top	2.74	-3.43	0.00	0.00	6.67	-3.51
9 a	2.65	-3.00	0.00	0.00	5.63	-3.14
9 b	2.26	-1.11	0.00	0.00	2.48	-1.64
9 c	1.87	0.43	0.00	0.00	0.23	-0.22
10 top	-2.69	-3.61	0.00	0.00	6.26	-2.31
10 a	-2.57	-3.18	0.00	0.00	5.21	-1.72
10 b	-2.09	-1.25	0.00	0.00	2.50	-0.82
10 c	-1.62	0.35	0.00	0.00	0.43	-0.40
11 top	1.33	-3.33	0.00	0.00	0.17	0.12
11 a	1.35	-2.92	0.00	0.00	0.16	0.11
11 b	1.47	-1.10	0.00	0.00	0.15	0.08
11 c	1.59	0.41	0.00	0.00	0.21	0.05

1_III_B_SL_HL93_tandem_EL.OUT 9/11/2009

VEH: HL93- TANDEM- S BRUG(5.75.44) page 56
date 11/09/2009; time 14:42:54
Cline Avenue - Striped Lanes - Double Box - 4 Webs - 71.105'

Summary of the results (Minimum)

Section	--- Deadload ---		----- P.T. ------		--- Live load ---	
	Moment	Ax.Frc	Moment	Ax.Frc	Moment	Ax.Frc
1 a	-3.62	0.35	0.00	0.00	-0.16	0.09
1 b	-7.11	0.78	0.00	0.00	-0.45	0.22
1 c	-11.91	1.48	0.00	0.00	-3.59	0.72
1 right	-13.26	1.69	0.00	0.00	-5.51	0.92
2 left	-6.63	2.28	0.00	0.00	-6.93	0.08
2 a	-5.69	2.07	0.00	0.00	-6.08	-0.10
2 b	-0.81	0.90	0.00	0.00	-0.66	-0.17
2 c	-0.16	0.67	0.00	0.00	-0.49	0.30
2 right	-4.78	1.22	0.00	0.00	-6.55	-0.03
3 left	-7.52	1.10	0.00	0.00	-10.51	0.32
3 a	-6.39	0.85	0.00	0.00	-9.52	0.23
3 b	0.13	-0.62	0.00	0.00	-3.01	-0.18
3 c	2.24	-1.25	0.00	0.00	-0.15	-0.13
3 right	-7.99	0.35	0.00	0.00	-10.44	0.29
4 left	-5.30	0.49	0.00	0.00	-6.55	-0.16
4 a	-4.42	0.32	0.00	0.00	-5.76	-0.36
4 b	0.00	-0.48	0.00	0.00	-0.84	0.41
4 c	0.45	-0.52	0.00	0.00	-0.48	0.27
4 right	-4.89	0.79	0.00	0.00	-6.92	-0.08
5 left	-6.22	0.83	0.00	0.00	-2.36	0.47
5 a	-5.21	0.66	0.00	0.00	-1.76	0.36
5 b	-2.44	0.25	0.00	0.00	-0.56	0.12
5 c	-0.60	0.05	0.00	0.00	-0.12	0.02
6 a	-0.90	-0.35	0.00	0.00	-0.29	0.16
6 b	-0.40	-0.01	0.00	0.00	-0.25	0.18
6 c	0.84	1.01	0.00	0.00	-0.05	0.85
7 a	-1.06	0.09	0.00	0.00	-0.32	0.74
7 b	-0.55	0.39	0.00	0.00	-0.25	0.79
7 c	0.81	1.26	0.00	0.00	-0.05	0.85
8 top	-6.63	-4.06	0.00	0.00	-1.20	-6.02
8 a	-6.14	-3.58	0.00	0.00	-1.03	-5.35
8 b	-4.06	-1.46	0.00	0.00	-0.37	-2.57
8 c	-2.01	0.29	0.00	0.00	-0.22	0.06
9 top	2.74	-3.43	0.00	0.00	-6.17	-2.31
9 a	2.65	-3.00	0.00	0.00	-5.13	-1.73
9 b	2.26	-1.11	0.00	0.00	-2.46	-0.82
9 c	1.87	0.43	0.00	0.00	-0.43	-0.40
10 top	-2.69	-3.61	0.00	0.00	-6.60	-3.50
10 a	-2.57	-3.18	0.00	0.00	-5.57	-3.14
10 b	-2.09	-1.25	0.00	0.00	-2.44	-1.64
10 c	-1.62	0.35	0.00	0.00	-0.23	-0.22
11 top	1.33	-3.33	0.00	0.00	-4.43	-2.12
11 a	1.35	-2.92	0.00	0.00	-3.79	-1.89
11 b	1.47	-1.10	0.00	0.00	-1.80	-0.94
11 c	1.59	0.41	0.00	0.00	-0.42	-0.36

Summary of the results (Maximum)

Section	--- Deadload ----		----- P.T. ------		--- Live load ---	
	Moment	Ax.Frc	Moment	Ax.Frc	Moment	Ax.Frc
1 a	-3.62	0.35	0.00	0.00	0.14	0.05
1 b	-7.11	0.78	0.00	0.00	1.13	0.12
1 c	-11.91	1.48	0.00	0.00	0.75	0.25
1 right	-13.26	1.69	0.00	0.00	0.45	0.40
2 left	-6.63	2.28	0.00	0.00	1.06	0.39
2 a	-5.69	2.07	0.00	0.00	1.66	0.41
2 b	-0.81	0.90	0.00	0.00	3.77	-0.02
2 c	-0.16	0.67	0.00	0.00	4.99	-0.43
2 right	-4.78	1.22	0.00	0.00	1.37	0.61
3 left	-7.52	1.10	0.00	0.00	4.47	1.37
3 a	-6.39	0.85	0.00	0.00	5.28	1.04
3 b	0.13	-0.62	0.00	0.00	6.11	0.17
3 c	2.24	-1.25	0.00	0.00	7.85	-0.26
3 right	-7.99	0.35	0.00	0.00	3.28	1.22
4 left	-5.30	0.49	0.00	0.00	1.37	0.56
4 a	-4.42	0.32	0.00	0.00	2.20	0.52
4 b	0.00	-0.48	0.00	0.00	4.74	-0.33
4 c	0.45	-0.52	0.00	0.00	4.95	-0.73
4 right	-4.89	0.79	0.00	0.00	0.22	0.00
5 left	-6.22	0.83	0.00	0.00	0.15	0.07
5 a	-5.21	0.66	0.00	0.00	0.12	0.06
5 b	-2.44	0.25	0.00	0.00	0.04	0.02
5 c	-0.60	0.05	0.00	0.00	0.01	0.00
6 a	-0.90	-0.35	0.00	0.00	0.60	0.01
6 b	-0.40	-0.01	0.00	0.00	0.51	0.18
6 c	0.84	1.01	0.00	0.00	0.06	-0.28
7 a	-1.06	0.09	0.00	0.00	0.78	-0.85
7 b	-0.55	0.39	0.00	0.00	0.63	-0.65
7 c	0.81	1.26	0.00	0.00	0.05	-0.27
8 top	-6.63	-4.06	0.00	0.00	6.25	-5.23
8 a	-6.14	-3.58	0.00	0.00	5.36	-4.46
8 b	-4.06	-1.46	0.00	0.00	2.71	-1.46
8 c	-2.01	0.29	0.00	0.00	0.72	-0.48
9 top	2.74	-3.43	0.00	0.00	10.33	-4.90
9 a	2.65	-3.00	0.00	0.00	8.93	-4.26
9 b	2.26	-1.11	0.00	0.00	4.39	-1.65
9 c	1.87	0.43	0.00	0.00	0.52	-0.27
10 top	-2.69	-3.61	0.00	0.00	9.40	-4.79
10 a	-2.57	-3.18	0.00	0.00	8.14	-4.06
10 b	-2.09	-1.25	0.00	0.00	4.12	-1.57
10 c	-1.62	0.35	0.00	0.00	0.82	-0.46
11 top	1.33	-3.33	0.00	0.00	0.15	0.11
11 a	1.35	-2.92	0.00	0.00	0.17	0.11
11 b	1.47	-1.10	0.00	0.00	0.27	0.12
11 c	1.59	0.41	0.00	0.00	0.45	0.10

Summary of the results (Minimum)

Section	--- Deadload ----		----- P.T. ------		--- Live load ---	
	Moment	Ax.Frc	Moment	Ax.Frc	Moment	Ax.Frc
1 a	-3.62	0.35	0.00	0.00	-0.11	0.11
1 b	-7.11	0.78	0.00	0.00	-0.32	0.27
1 c	-11.91	1.48	0.00	0.00	-3.82	0.96
1 right	-13.26	1.69	0.00	0.00	-6.32	1.31
2 left	-6.63	2.28	0.00	0.00	-8.91	1.03
2 a	-5.69	2.07	0.00	0.00	-7.05	-0.23
2 b	-0.81	0.90	0.00	0.00	-1.14	-0.07
2 c	-0.16	0.67	0.00	0.00	-0.94	0.46
2 right	-4.78	1.22	0.00	0.00	-7.74	0.49
3 left	-7.52	1.10	0.00	0.00	-14.21	0.34
3 a	-6.39	0.85	0.00	0.00	-12.78	0.12
3 b	0.13	-0.62	0.00	0.00	-4.70	-0.31
3 c	2.24	-1.25	0.00	0.00	-0.26	-0.08
3 right	-7.99	0.35	0.00	0.00	-13.98	0.31
4 left	-5.30	0.49	0.00	0.00	-7.35	-0.04
4 a	-4.42	0.32	0.00	0.00	-5.34	-0.28
4 b	0.00	-0.48	0.00	0.00	-1.26	0.60
4 c	0.45	-0.52	0.00	0.00	-0.92	0.41
4 right	-4.89	0.79	0.00	0.00	-8.15	-0.09
5 left	-6.22	0.83	0.00	0.00	-1.87	0.69
5 a	-5.21	0.66	0.00	0.00	-1.32	0.47
5 b	-2.44	0.25	0.00	0.00	-0.37	0.12
5 c	-0.60	0.05	0.00	0.00	-0.08	0.02
6 a	-0.90	-0.35	0.00	0.00	-0.66	0.32
6 b	-0.40	-0.01	0.00	0.00	-0.56	0.32
6 c	0.84	1.01	0.00	0.00	-0.08	1.33
7 a	-1.06	0.09	0.00	0.00	-0.39	0.82
7 b	-0.55	0.39	0.00	0.00	-0.33	0.85
7 c	0.81	1.26	0.00	0.00	-0.08	1.25
8 top	-6.63	-4.06	0.00	0.00	-3.44	-3.99
8 a	-6.14	-3.58	0.00	0.00	-2.86	-3.36
8 b	-4.06	-1.46	0.00	0.00	-1.35	-1.28
8 c	-2.01	0.29	0.00	0.00	-0.46	0.11
9 top	2.74	-3.43	0.00	0.00	-10.70	-5.30
9 a	2.65	-3.00	0.00	0.00	-9.33	-4.44
9 b	2.26	-1.11	0.00	0.00	-4.69	-1.64
9 c	1.87	0.43	0.00	0.00	-0.82	-0.41
10 top	-2.69	-3.61	0.00	0.00	-10.13	-4.87
10 a	-2.57	-3.18	0.00	0.00	-8.75	-4.25
10 b	-2.09	-1.25	0.00	0.00	-4.29	-1.64
10 c	-1.62	0.35	0.00	0.00	-0.51	-0.26
11 top	1.33	-3.33	0.00	0.00	-6.30	-5.20
11 a	1.35	-2.92	0.00	0.00	-5.36	-4.44
11 b	1.47	-1.10	0.00	0.00	-2.70	-1.84
11 c	1.59	0.41	0.00	0.00	-0.66	-0.36

VEH: HL93- TANDEM BRUG(5.75.44) page 55
date 11/09/2009; time 14:43:03
Cline Avenue - Striped Lanes - Double Box - 4 Webs - 71.105'

Summary of the results (Maximum)

Section	--- Deadload ---		----- P.T. ------		--- Live load ---	
	Moment	Ax.Frc	Moment	Ax.Frc	Moment	Ax.Frc
1 a	-3.62	0.35	0.00	0.00	0.14	0.10
1 b	-7.11	0.78	0.00	0.00	0.59	0.29
1 c	-11.91	1.48	0.00	0.00	0.23	0.05
1 right	-13.26	1.69	0.00	0.00	0.30	0.06
2 left	-6.63	2.28	0.00	0.00	0.35	0.01
2 a	-5.69	2.07	0.00	0.00	0.29	0.02
2 b	-0.81	0.90	0.00	0.00	3.30	-0.02
2 c	-0.16	0.67	0.00	0.00	4.55	-0.41
2 right	-4.78	1.22	0.00	0.00	-0.36	0.05
3 left	-7.52	1.10	0.00	0.00	1.52	1.27
3 a	-6.39	0.85	0.00	0.00	2.26	1.10
3 b	0.13	-0.62	0.00	0.00	4.48	0.09
3 c	2.24	-1.25	0.00	0.00	7.31	-0.33
3 right	-7.99	0.35	0.00	0.00	0.47	0.96
4 left	-5.30	0.49	0.00	0.00	-0.40	0.11
4 a	-4.42	0.32	0.00	0.00	-0.15	0.95
4 b	0.00	-0.48	0.00	0.00	3.81	-0.45
4 c	0.45	-0.52	0.00	0.00	4.47	-0.61
4 right	-4.89	0.79	0.00	0.00	0.36	0.00
5 left	-6.22	0.83	0.00	0.00	0.30	0.03
5 a	-5.21	0.66	0.00	0.00	0.23	0.02
5 b	-2.44	0.25	0.00	0.00	0.08	0.01
5 c	-0.60	0.05	0.00	0.00	0.02	0.00
6 a	-0.90	-0.35	0.00	0.00	0.42	-0.05
6 b	-0.40	-0.01	0.00	0.00	0.35	0.12
6 c	0.84	1.01	0.00	0.00	0.04	-0.22
7 a	-1.06	0.09	0.00	0.00	0.69	-0.85
7 b	-0.55	0.39	0.00	0.00	0.52	-0.60
7 c	0.81	1.26	0.00	0.00	0.04	-0.22
8 top	-6.63	-4.06	0.00	0.00	6.03	-4.71
8 a	-6.14	-3.58	0.00	0.00	5.13	-4.20
8 b	-4.06	-1.46	0.00	0.00	2.42	-2.03
8 c	-2.01	0.29	0.00	0.00	0.53	-0.64
9 top	2.74	-3.43	0.00	0.00	10.09	-5.01
9 a	2.65	-3.00	0.00	0.00	8.61	-4.49
9 b	2.26	-1.11	0.00	0.00	3.91	-2.36
9 c	1.87	0.43	0.00	0.00	0.38	-0.27
10 top	-2.69	-3.61	0.00	0.00	6.50	-7.62
10 a	-2.57	-3.18	0.00	0.00	5.67	-6.76
10 b	-2.09	-1.25	0.00	0.00	2.88	-3.20
10 c	-1.62	0.35	0.00	0.00	0.61	-0.60
11 top	1.33	-3.33	0.00	0.00	0.21	0.15
11 a	1.35	-2.92	0.00	0.00	0.20	0.14
11 b	1.47	-1.10	0.00	0.00	0.23	0.12
11 c	1.59	0.41	0.00	0.00	0.35	0.09

VEH: HL93- TANDEM BRUG(5.75.44) page 56
date 11/09/2009; time 14:43:03
Cline Avenue - Striped Lanes - Double Box - 4 Webs - 71.105'

Summary of the results (Minimum)

Section	--- Deadload ---		----- P.T. ------		--- Live load ---	
	Moment	Ax.Frc	Moment	Ax.Frc	Moment	Ax.Frc
1 a	-3.62	0.35	0.00	0.00	-0.17	0.15
1 b	-7.11	0.78	0.00	0.00	-0.49	0.39
1 c	-11.91	1.48	0.00	0.00	-4.82	1.06
1 right	-13.26	1.69	0.00	0.00	-7.16	1.32
2 left	-6.63	2.28	0.00	0.00	-10.12	1.01
2 a	-5.69	2.07	0.00	0.00	-8.08	0.76
2 b	-0.81	0.90	0.00	0.00	-0.85	0.02
2 c	-0.16	0.67	0.00	0.00	-0.80	0.39
2 right	-4.78	1.22	0.00	0.00	-9.41	0.75
3 left	-7.52	1.10	0.00	0.00	-15.32	0.37
3 a	-6.39	0.85	0.00	0.00	-13.75	0.24
3 b	0.13	-0.62	0.00	0.00	-4.25	-0.31
3 c	2.24	-1.25	0.00	0.00	-0.20	-0.07
3 right	-7.99	0.35	0.00	0.00	-15.17	0.35
4 left	-5.30	0.49	0.00	0.00	-9.20	0.73
4 a	-4.42	0.32	0.00	0.00	-6.84	0.32
4 b	0.00	-0.48	0.00	0.00	-1.31	0.54
4 c	0.45	-0.52	0.00	0.00	-0.78	0.35
4 right	-4.89	0.79	0.00	0.00	-8.63	-0.05
5 left	-6.22	0.83	0.00	0.00	-2.64	0.69
5 a	-5.21	0.66	0.00	0.00	-1.97	0.52
5 b	-2.44	0.25	0.00	0.00	-0.63	0.17
5 c	-0.60	0.05	0.00	0.00	-0.14	0.03
6 a	-0.90	-0.35	0.00	0.00	-0.51	0.23
6 b	-0.40	-0.01	0.00	0.00	-0.43	0.24
6 c	0.84	1.01	0.00	0.00	-0.07	1.38
7 a	-1.06	0.09	0.00	0.00	-0.32	0.74
7 b	-0.55	0.39	0.00	0.00	-0.25	0.79
7 c	0.81	1.26	0.00	0.00	-0.06	1.33
8 top	-6.63	-4.06	0.00	0.00	-1.36	-5.90
8 a	-6.14	-3.58	0.00	0.00	-1.18	-5.23
8 b	-4.06	-1.46	0.00	0.00	-0.52	-2.49
8 c	-2.01	0.29	0.00	0.00	-0.36	0.09
9 top	2.74	-3.43	0.00	0.00	-9.08	-4.79
9 a	2.65	-3.00	0.00	0.00	-7.84	-4.25
9 b	2.26	-1.11	0.00	0.00	-3.77	-1.98
9 c	1.87	0.43	0.00	0.00	-0.60	-0.51
10 top	-2.69	-3.61	0.00	0.00	-9.96	-4.99
10 a	-2.57	-3.18	0.00	0.00	-8.49	-4.47
10 b	-2.09	-1.25	0.00	0.00	-3.84	-2.35
10 c	-1.62	0.35	0.00	0.00	-0.37	-0.27
11 top	1.33	-3.33	0.00	0.00	-5.99	-4.70
11 a	1.35	-2.92	0.00	0.00	-5.10	-4.19
11 b	1.47	-1.10	0.00	0.00	-2.41	-2.03
11 c	1.59	0.41	0.00	0.00	-0.43	-0.39

4.8 3D Analysis Section IVA

Case IV — Two adjacent boxes (3 webs) + 1 box

Pier 26 - 27

EBL Segment 6
variable width (87.673' @ Pier 26 to 78.833 @ Pier 2

Max width & change in cross section at Pier 26, RM joint (753) tango (37)

≈ Midspan width = 83.606
t_{slab} = 5.5
H = 9' at joint RM (767) tango (52)

Pier 13-14

WBL Segment 3.

variable width. (74.2' @ Pier 13 to 80.512' @ Pier 14)

≈ Midspan width = 77.412
t_{slab} = 5.5
H = 9' at joint RM (384) tango (62)

change in XS assumed at RM joint (399) tango (77)

Determine Maximum Width of Section

Assume there is a three way slab action at 45° from Diaphragm.

At Pier 26 width = 87.673', assume two way slab action starts at approximate 10' from diaphragm.

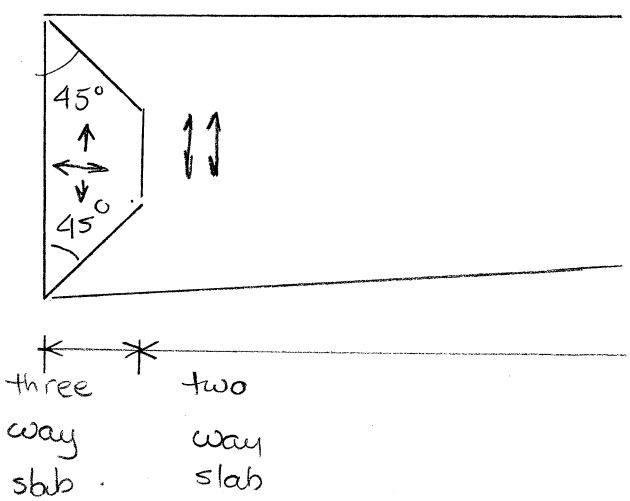

Width Used = 87.34'

at sta 167+01.25 (face of diaphragm) width = 87.673 ft.

at sta 167+09.30 width = 87.351 ft.

at 10 ft, width = $87.673 - \frac{(87.673 - 87.351)(10)}{(8.0521)}$

width = 87.27, OK

4.8.1 Brug Model

BRUG SECTIONS

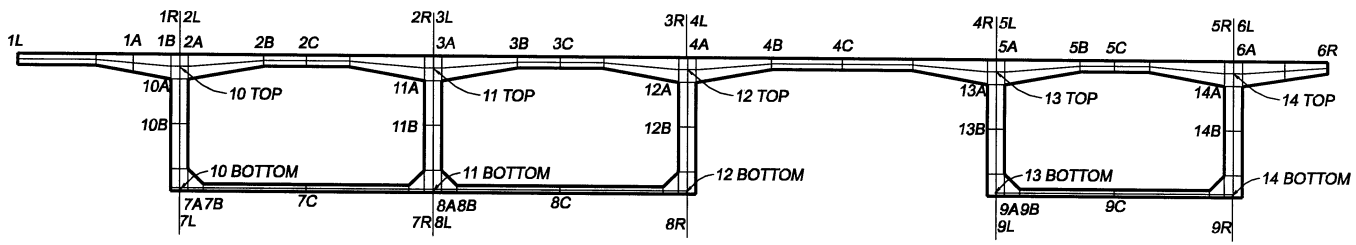

√ DEM
01/15/09

4.8.1

HALF SIZE PRINT - 11x17					
No.	Date	App.	Revisions	Designed by	—
				Drawn by R.V.A.	
				Checked by	
				UNWARNED SCALE	

URS
URS Corporation Southern
7650 Corporate Center Drive
Suite 400
Miami, FL 33126-1220
Tel: (305) 262-7485
C.A. No. EB 00000002

TYPICAL SECTION - Transverse Analysis

SECTION IVA

DRAWING NO. | SHEET NO.

BRUG MODEL

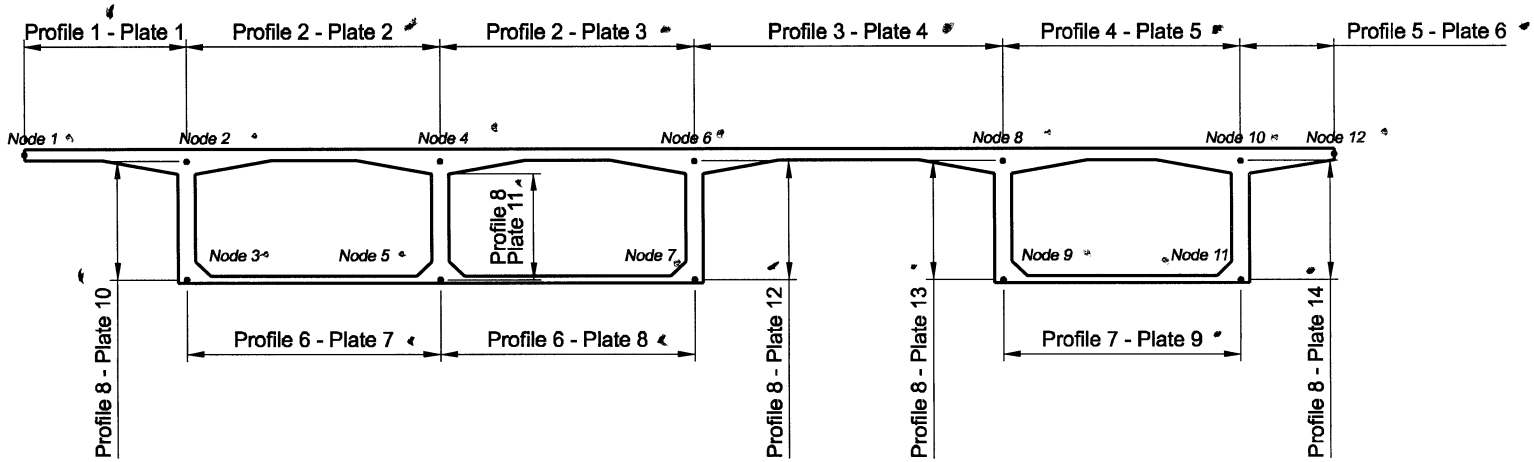

VDLM
1/15/09

4.8.1/2

HALF SIZE PRINT - 11x17

Designed by
Drawn by R.V.A.
Checked by
DRAWING SCALE:

URS
URS Corporation Southern
7650 Corporate Center Drive
Suite 400
Miami, Fl. 33126-1220
Tel: (305) 262-7488
C.A. No. EB 00000002

TYPICAL SECTION - Transverse Analysis

SECTION IVA

DRAWING NO.
SHEET NO.

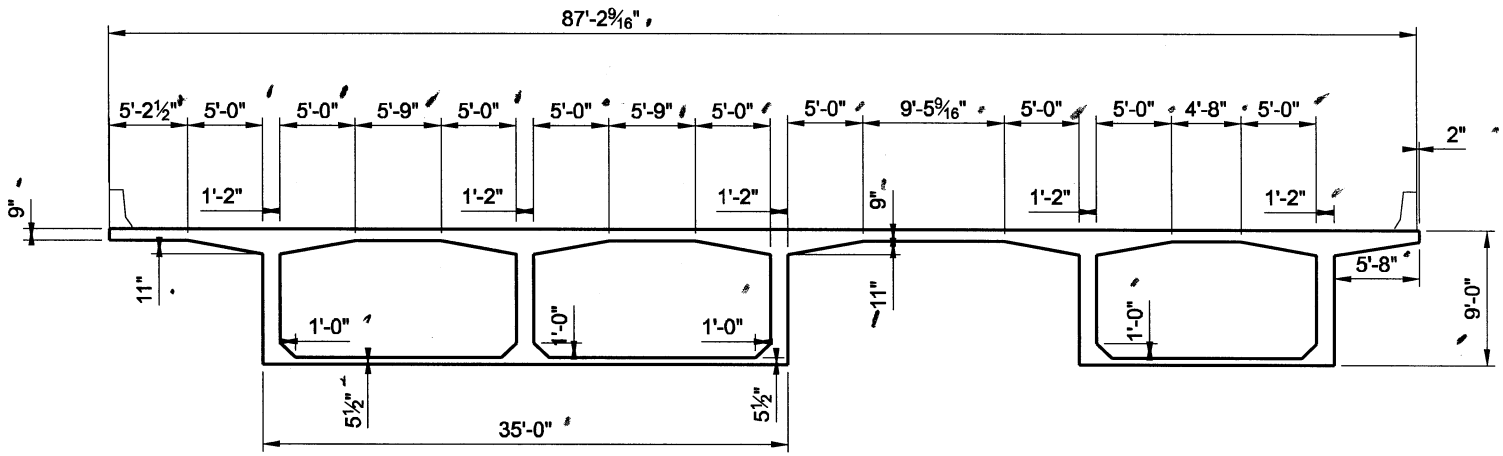

DIMENSIONS

Dem
1/15/09

4.8.1/3

HALF SIZE PRINT - 11x17					
No	Date	App	Revisions	Designed by	
				Drawn by R.V.A.	
				Checked by	
				Drawing SCALE	

URS Corporation Southern
7650 Corporate Center Drive
Suite 400
Miami, FL 33126-1220
Tel: (305) 262-7400
C.A. No. ER 00000002

TYPICAL SECTION - Transverse Analysis

SECTION IVA

DRAWING NO. SHEET NO.

NAME P.C. NO. SFILE

pdcline_floater U2S2006 7:45:47 AM

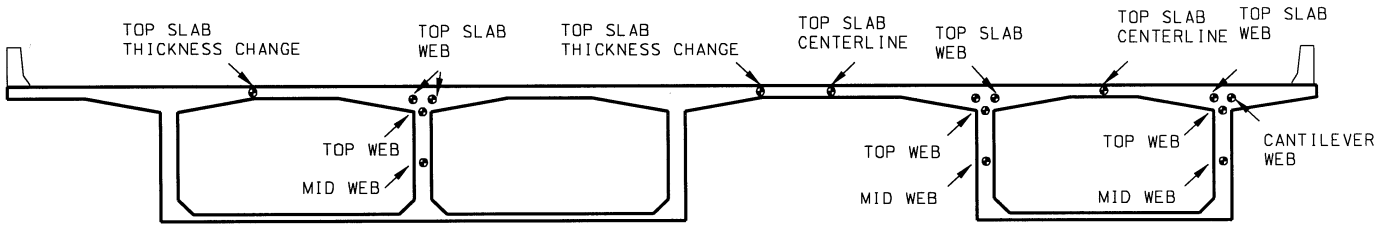

RATING POINTS

DRM
1/15/09

4.8.1/4

HALF SIZE PRINT - 11x17

No.	Date	App.	Revisions

Designed by
Drawn by R.V.A.
Checked by
DRAWING SCALE

URS

URS Corporation Southern
7650 Corporate Center Drive
Suite 400
Miami, FL 33126-1220
Tel: (305) 265-7466
C.A. No. EB 00000002

TYPICAL SECTION - Transverse Analysis

SECTION IVA

DRAWING NO.
SHEET NO.
NAME P.E. NO.
SFBUDLE

pdf-tiff_transfer
1/15/2009 7:14:22 AM

URS CORPORATION	Made by:	PT	Date: 12-Jan-09	Job Number: 25626272.00001	Job Number: 25626272.00001
	Checked by:	DHM	Date: 1-15-09	Sheet Number:	Sheet Number:
Brug Joints and Members	Backchecked by:	PT	Date: 1/21/09		

V:\Projects\Cline Avenue\Load Rating Analysis\Transverse Analysis\Spreadsheet\[Brug Input.xls]Model_Joints Brugh_IV_A

Data measured from Microstation File

V:\Projects\Cline Avenue\Load Rating Analysis\Transverse Analysis\Spreadsheet\[Brug Input.xls]Model_Joints Brugh_IV_A

GTStrudl Joint	X ft	Y ft	Height ft	BRUG NODE
1	0.0000	8.1667	0.750	1
2	5.2083	8.1667	0.750	
3	7.7083	8.1667	1.208	
4	10.2083	8.1667	1.667	
5	10.7917	8.1667	1.667	2
6	11.3750	8.1667	1.667	
7	16.3750	8.1667	0.750	
8	19.2500	8.1667	0.750	
9	22.1250	8.1667	0.750	
10	27.1250	8.1667	1.667	
11	27.7083	8.1667	1.667	4
12	28.2917	8.1667	1.667	
13	33.2917	8.1667	0.750	
14	36.1667	8.1667	0.750	
15	39.0417	8.1667	0.750	
16	44.0417	8.1667	1.667	
17	44.6250	8.1667	1.667	6
18	45.2083	8.1667	1.667	
19	50.2083	8.1667	0.750	
20	54.9410	8.1667	0.750	
21	59.6736	8.1667	0.750	
22	64.6736	8.1667	1.667	
23	65.2569	8.1667	1.667	8
24	65.8403	8.1667	1.667	
25	70.8403	8.1667	0.750	
26	73.1736	8.1667	0.750	
27	75.5069	8.1667	0.750	
28	80.5069	8.1667	1.667	
29	81.0903	8.1667	1.667	10
30	81.6736	8.1667	1.667	
31	84.5069	8.1667	1.208	
32	87.3403	8.1667	0.750	12
33	10.7917	7.3333	1.167	
34	10.7917	4.3958	1.167	
35	10.7917	1.4583	1.167	
36	10.7917	0.2292	1.167	3
37	11.3750	0.2292	1.458	
38	12.3750	0.2292	0.458	
39	19.2500	0.2292	0.458	
40	26.1250	0.2292	0.458	
41	27.1250	0.2292	1.458	
42	27.7083	0.2292	1.458	5
43	28.2917	0.2292	1.458	
44	29.2917	0.2292	0.458	
45	36.1667	0.2292	0.458	
46	43.0417	0.2292	0.458	
47	44.0417	0.2292	1.458	

GTStrudl MEMBER	BEGIN JOINT	END JOINT	Length ft
1	1	2	5.208
2	2	3	2.500
3	3	4	2.500
4	4	5	0.583
5	5	6	0.583
6	6	7	5.000
7	7	8	2.875
8	8	9	2.875
9	9	10	5.000
10	10	11	0.583
11	11	12	0.583
12	12	13	5.000
13	13	14	2.875
14	14	15	2.875
15	15	16	5.000
16	16	17	0.583
17	17	18	0.583
18	18	19	5.000
19	19	20	4.733
20	20	21	4.733
21	21	22	5.000
22	22	23	0.583
23	23	24	0.583
24	24	25	5.000
25	25	26	2.333
26	26	27	2.333
27	27	28	5.000
28	28	29	0.583
29	29	30	0.583
30	30	31	2.833
31	31	32	2.833
32	5	33	0.833
33	33	34	2.937
34	34	35	2.938
35	35	36	1.229
36	36	37	0.583
37	37	38	1.000
38	38	39	6.875
39	39	40	6.875
40	40	41	1.000
41	41	42	0.583
42	42	43	0.583
43	43	44	1.000
44	44	45	6.875
45	45	46	6.875
46	46	47	1.000
47	47	48	0.583

LEFT CANTILEVER

GT Joint	Brug Section	Brug Joint	Length	Height
1	1L	1	0.0000	0.7500
2	~~1A~~	2	5.2083	0.7500
3	~~1B~~ 1A	3	7.7083	1.2083
4	~~1C~~ 1B	4	10.2083	1.6667
5	1R	5	10.7917	1.6667

LEFT CELL (2 Box Section)

GT Joint	Brug Section	Brug Joint	Length	Height
5	2L	1	0.0000	1.6667
6	2A	2	0.5833	1.6667
7	2B	3	5.5833	0.7500
8	2C	4	8.4583	0.7500
9		5	11.3333	0.7500
10		6	16.3333	1.6667
11	2R	7	16.9167	1.6667

RIGHT CELL (2 Box Section)

GT Joint	Brug Section	Brug Joint	Length	Height
11	3L	1	0.0000	1.6667
12	3A	2	0.5833	1.6667
13	3B	3	5.5833	0.7500
14	3C	4	8.4583	0.7500
15		5	11.3333	0.7500
16		6	16.3333	1.6667
17	3R	7	16.9167	1.6667

INTERMEDIATE SLAB

GT Joint	Brug Section	Brug Joint	Length	Height
17	4L	1	0.0000	1.6667
18	4A	2	0.5833	1.6667
19	4B	3	5.5833	0.7500
20	4C	4	10.3160	0.7500
21		5	15.0486	0.7500
22		6	20.0486	1.6667
23	4R	7	20.6319	1.6667

BOTTOM SLAB LEFT

GT Joint	Brug Section	Brug Joint	Length	Height
36	7L	1	0.0000	1.4583
37	7A	2	0.5833	1.4583
38	7B	3	1.5833	0.4583
39	7C	4	8.4583	0.4583
40		5	15.3333	0.4583
41		6	16.3333	1.4583
42	7R	7	16.9167	1.4583

BOTTOM SLAB RIGHT

GT Joint	Brug Section	Brug Joint	Length	Height
42	8L	1	0.0000	1.4583
43	8A	2	0.5833	1.4583
44	8B	3	1.5833	0.4583
45	8C	4	8.4583	0.4583
46		5	15.3333	0.4583
47		6	16.3333	1.4583
48	8R	7	16.9167	1.4583

BOTTOM SLAB SINGLE CELL

GT Joint	Brug Section	Brug Joint	Length	Height
60	9L	1	0.0000	1.4583
61	9A	2	0.5833	1.4583
62	9B	3	1.5833	0.4583
63	9C	4	7.9167	0.4583
64		5	14.2500	0.4583
65		6	15.2500	1.4583
66	9R	7	15.8333	1.4583

WEB

GT Joint	Brug Section	Brug Joint	Length	Height
5	10L	1	0.0000	1.1667
33	10A	2	0.8334	1.1667
34	10B	3	3.7709	1.1667
35	10C	4	6.7084	1.1667
36	10R	5	7.9375	1.1667

4.8.1/9

URS CORPORATION	Made by:	PT	Date: 12-Jan-09	Job Number: 25626272.00001	Job Number: 25626272.00001
	Checked by:	DCM	Date: 1-15-09	Sheet Number:	Sheet Number:
Brug Joints and Members	Backchecked by:		Date:		

V:\Projects\Cline Avenue\Load Rating Analysis\Transverse Analysis\Spreadsheet\[Brug Input.xls]Model_Joints Brugh_IV_A

Data measured from Microstation File

V:\Projects\Cline Avenue\Load Rating Analysis\Transverse Analysis\Spreadsheet\[Brug Input.xls]Model_Joints Brugh_IV_A

GTStrudl Joint	X ft	Y ft	Height ft	BRUG NODE
48	44.6250	0.2292	1.458	7
49	44.6250	1.4583	1.167	
50	44.6250	4.3958	1.167	
51	44.6250	7.3333	1.167	
53	27.7083	1.4583	1.167	
54	27.7083	4.3958	1.167	
55	27.7083	7.3333	1.167	
57	65.2569	7.3333	1.167	
58	65.2569	4.3958	1.167	
59	65.2569	1.4583	1.167	
60	65.2569	0.2292	1.167	9
61	65.8403	0.2292	1.458	
62	66.8403	0.2292	0.458	
63	73.1736	0.2292	0.458	
64	79.5070	0.2292	0.458	
65	80.5070	0.2292	1.458	
66	81.0903	0.2292	1.458	11
67	81.0903	1.4583	1.167	
68	81.0903	4.3958	1.167	
69	81.0903	7.3330	1.167	

GTStrudl MEMBER	BEGIN JOINT	END JOINT	Length ft
48	48	49	1.229
49	49	50	2.938
50	50	51	2.938
51	51	17	0.833
52	42	53	1.229
53	53	54	2.938
54	54	55	2.938
55	55	11	0.833
56	23	57	0.833
57	57	58	2.938
58	58	59	2.938
59	59	60	1.229
60	60	61	0.583
61	61	62	1.000
62	62	63	6.333
63	63	64	6.333
64	64	65	1.000
65	65	66	0.583
66	66	67	1.229
67	67	68	2.938
68	68	69	2.937
69	69	29	0.834

CELL (1 Box Section)

GT Joint	Brug Section	Brug Joint	Length	Height
23	5L	1	0.0000	1.6667
24	5A	2	0.5833	1.6667
25	5B	3	5.5833	0.7500
26	5C	4	7.9167	0.7500
27		5	10.2500	0.7500
28		6	15.2500	1.6667
29	5R	7	15.8333	1.6667

RIGHT CANTILEVER

GT Joint	Brug Section	Brug Joint	Length	Height
29	6L	1	0.0000	1.6667
30	6A	2	0.5833	1.6667
31	6B	3	3.4167	1.2083
32	6R	4	6.2500	0.7500

4.8.1/2

TRUCK LOCATION - NO TRAFFIC ON SHOULDERS

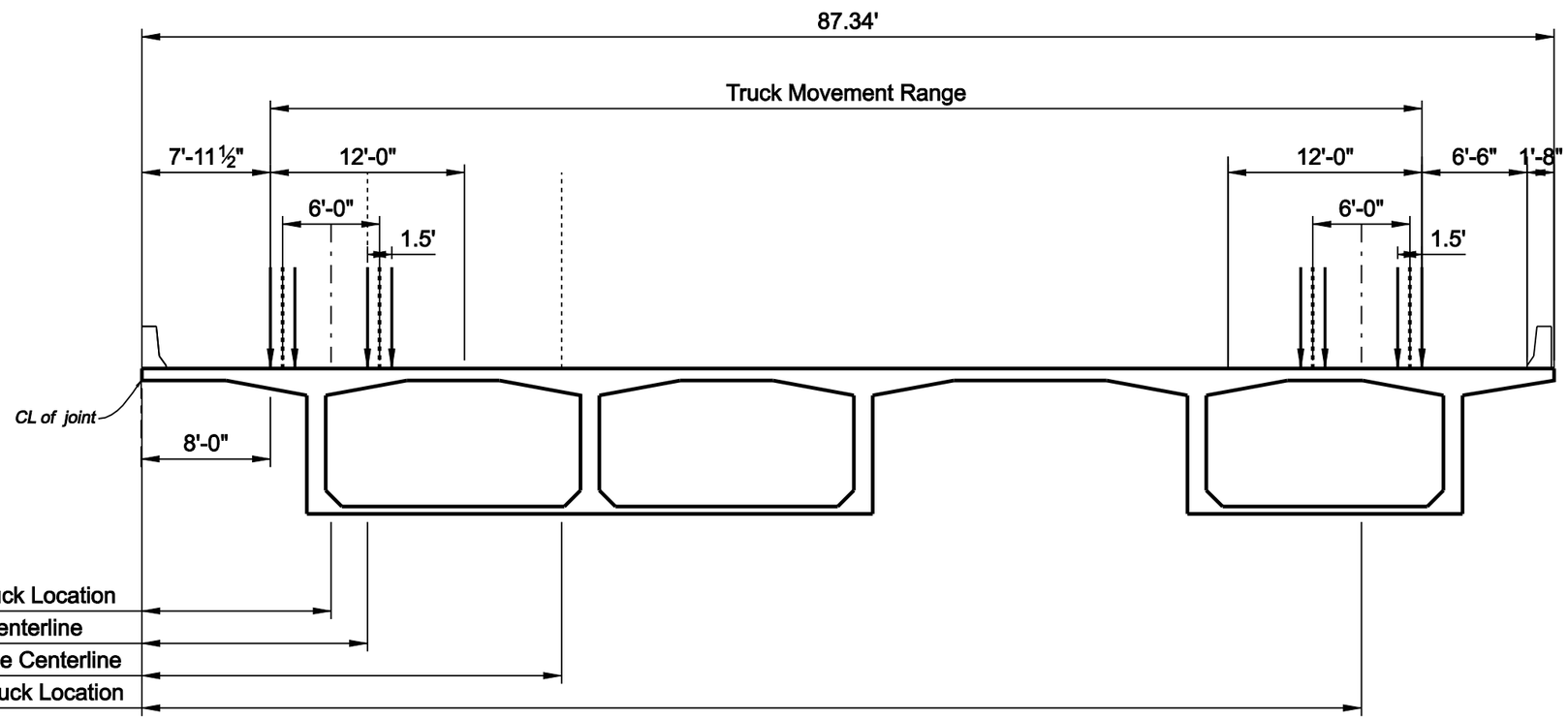

Design by: PT 9/09
Independent Check by: RJB 9/09

HALF SIZE PRINT - 11x17

No.	Date	App.	Revisions

Designed by -
Drawn by R.V.A.
Checked by -
DRAWING SCALE:

URS Corporation Southern
7650 Corporate Center Drive
Suite 400
Miami, FL 33126-1220
Tel: (305) 262-7466
C.A. No. EB 00000002

TYPICAL SECTION - Transverse Analysis

SECTION IVA

DRAWING NO. -
SHEET NO. -

4.8.1/7

4.8.2 Brug Input AASHTO Lanes

1_IV_A_HL93_truck_EL.txt 9/11/2009

```
* start ; column 11-30 can be used to have your own text on the top of each page
*   5   10   15   20   25   30   35   40   45   50   55   60   65   70   75   80
*   V    V    V    V    V    V    V    V    V    V    V    V    V    V    V    V
00001  1 1     VEH: HL93 TRUCK  - SINGLE VEHICLE
* code 1001
Cline Avenue - Load Rating - Double Box  AND SINGLE BOX  - 87.34' WIDE
* code 1002
    2         1
* code 1003
*   5   10   15   20   25   30   35   40   45   50   55   60   65   70   75   80
*   V    V    V    V    V    V    V    V    V    V    V    V    V    V    V    V
250.0      183.0        87.34       1.0       1.0       1.3
* code 1004
    1    0    2
* code 1005
   72    1
* code 1005a
* location traffic lanes
7.667
* maximum and minimum truck
6.667      80.673   10.000
* code 1007, linear loads
0.7350    0.441
86.605    0.441
* code 1201
   12    8    6    3    5
* code 1202 coordinates
0.0000    0.0
10.7917   0.0
10.7917   -7.938
27.7083   0.0
27.7083   -7.938
44.6250   0.0
44.6250   -7.938
65.2569   0.0
65.2569   -7.938
81.0903   0.0
81.0903   -7.938
87.3403   0.0
* code 1203 - profile 1
    5    3    4
0.0000    0.7500
5.2083    0.7500
7.7083    1.2083
10.2083   1.6667
10.7917   1.6667
* code 1203 - profile 2
    7    2    3    4
0.0000    1.6667
0.5833    1.6667
5.5833    0.7500
8.4583    0.7500
11.3333   0.7500
16.3333   1.6667
16.9167   1.6667
* code 1203 - profile 3
    7    2    3    4
0.0000    1.6667
0.5833    1.6667
5.5833    0.7500
10.3160   0.7500
15.0486   0.7500
20.0486   1.6667
20.6319   1.6667
* code 1203 - profile 4
    7    2    3    4
0.0000    1.6667
0.5833    1.6667
5.5833    0.7500
7.9167    0.7500
10.2500   0.7500
15.2500   1.6667
15.8333   1.6667
* code 1203 - profile 5
    4    2    3
0.0000    1.6667
0.5833    1.6667
3.4167    1.2083
6.2500    0.7500
* code 1203 - profile 6
    7    2    3    4
```

```
0.0000    1.4583
0.5833    1.4583
1.5833    0.4583
8.4583    0.4583
15.3333   0.4583
16.3333   1.4583
16.9167   1.4583
* code 1203 - profile 7
    7    2    3    4
0.0000    1.4583
0.5833    1.4583
1.5833    0.4583
7.9167    0.4583
14.2500   0.4583
15.2500   1.4583
15.8333   1.4583
* code 1203 - profile 8
    5    2    3
0.0000    1.1667
0.8334    1.1667
3.7709    1.1667
6.7084    1.1667
7.9375    1.1667
* code 1204 - assembling boxgirder
    1    2    1
    2    4    2
    4    6    2
    6    8    3
    8   10    4
   10   12    5
    3    5    6
    5    7    6
    9   11    7
    2    3    8
    4    5    8
    6    7    8
    8    9    8
   10   11    8
* code 1205 control code
    1    2   13    1    1    0    4    3     1.0       1.0
* code 1206 wheels/axle
       0.0
       1.5
       6.0
       7.5 0.833
* code 1207 definition axles
0.0       0.1
14.0      0.4
28.0      0.4
* code 1208 - accuracy
0.00001   0.00001   0.00001   .00001    .00001
* code 1209 number sections
   50
   1A   1B   1R   2L   2A   2B   2C   2R   3L   3A   3B   3C   3R
   4L   4A   4B   4C   4R   5L   5A   5B   5C   5R   6L   6A   6B
   7A   7B   7C   8A   8B   8C   9A   9B   9C  10L  10A  10B  11L  11A
  11B  12L  12A  12B  13L  13A  13B  14L  14A  14B
* code 1210 - density conrete
0.156
* code 1211 - extra forces selfweight

* code 1212 - surcharge
2.1835
* code 1213 - Prestressing Layout - NONE
```

```
* start ; column 11-30 can be used to have your own text on the top of each page
*   5   10   15   20   25   30   35   40   45   50   55   60   65   70   75   80
*   V    V    V    V    V    V    V    V    V    V    V    V    V    V    V    V
00001  1 1     VEH: HL93- TANDEM - Single Vehicle
* code 1001
Cline Avenue - Load Rating - Double Box  AND SINGLE BOX  - 87.34' WIDE
* code 1002
    2         1
* code 1003
*   5   10   15   20   25   30   35   40   45   50   55   60   65   70   75   80
*   V    V    V    V    V    V    V    V    V    V    V    V    V    V    V    V
250.0      183.0        87.34       1.0       1.0       1.3
* code 1004
    1    0    2
* code 1005
   50    1
* code 1005a
* location traffic lanes
7.667
* maximum and minimum truck
6.667      80.673   10.000
* code 1007, linear loads
0.7350    0.441
86.605    0.441
* code 1201
   12    8    6    3    5
* code 1202 coordinates
0.0000    0.0
10.7917   0.0
10.7917   -7.938
27.7083   0.0
27.7083   -7.938
44.6250   0.0
44.6250   -7.938
65.2569   0.0
65.2569   -7.938
81.0903   0.0
81.0903   -7.938
87.3403   0.0
* code 1203 - profile 1
    5    3    4
0.0000    0.7500
5.2083    0.7500
7.7083    1.2083
10.2083   1.6667
10.7917   1.6667
* code 1203 - profile 2
    7    2    3    4
0.0000    1.6667
0.5833    1.6667
5.5833    0.7500
8.4583    0.7500
11.3333   0.7500
16.3333   1.6667
16.9167   1.6667
* code 1203 - profile 3
    7    2    3    4
0.0000    1.6667
0.5833    1.6667
5.5833    0.7500
10.3160   0.7500
15.0486   0.7500
20.0486   1.6667
20.6319   1.6667
* code 1203 - profile 4
    7    2    3    4
0.0000    1.6667
0.5833    1.6667
5.5833    0.7500
7.9167    0.7500
10.2500   0.7500
15.2500   1.6667
15.8333   1.6667
* code 1203 - profile 5
    4    2    3
0.0000    1.6667
0.5833    1.6667
3.4167    1.2083
6.2500    0.7500
* code 1203 - profile 6
    7    2    3    4
```

```
0.0000    1.4583
0.5833    1.4583
1.5833    0.4583
8.4583    0.4583
15.3333   0.4583
16.3333   1.4583
16.9167   1.4583
* code 1203 - profile 7
    7    2    3    4
0.0000    1.4583
0.5833    1.4583
1.5833    0.4583
7.9167    0.4583
14.2500   0.4583
15.2500   1.4583
15.8333   1.4583
* code 1203 - profile 8
    5    2    3
0.0000    1.1667
0.8334    1.1667
3.7709    1.1667
6.7084    1.1667
7.9375    1.1667
* code 1204 - assembling boxgirder
    1    2    1
    2    4    2
    4    6    2
    6    8    3
    8   10    4
   10   12    5
    3    5    6
    5    7    6
    9   11    7
    2    3    8
    4    5    8
    6    7    8
    8    9    8
   10   11    8
* code 1205 control code
    1    2   13    1    1    0    4    2     1.0       1.0
* code 1206 wheels/axle
       0.0
       1.5
       6.0
       7.5 0.833
* code 1207 definition axles
0.0       0.5
4.0       0.5
* code 1208 - accuracy
0.00001   0.00001   0.00001   .00001    .00001
* code 1209 number sections
   50
   1A   1B   1R   2L   2A   2B   2C   2R   3L   3A   3B   3C   3R
   4L   4A   4B   4C   4R   5L   5A   5B   5C   5R   6L   6A   6B
   7A   7B   7C   8A   8B   8C   9A   9B   9C  10L  10A  10B  11L  11A
  11B  12L  12A  12B  13L  13A  13B  14L  14A  14B
* code 1210 - density conrete
0.156
* code 1211 - extra forces selfweight

* code 1212 - surcharge
2.1835
* code 1213 - Prestressing Layout - NONE
•
```

```
* start ; column 11-30 can be used to have your own text on the top of each page
*   5   10   15   20   25   30   35   40   45   50   55   60   65   70   75   80
*   V    V    V    V    V    V    V    V    V    V    V    V    V    V    V    V
00001  1 1     VEH: R1 - TOLL ROAD LOADING No. 1 - Single Vehicle
* code 1001
Cline Avenue - Load Rating - Double Box  AND SINGLE BOX  - 87.34' WIDE
* code 1002
    2         1
* code 1003
*   5   10   15   20   25   30   35   40   45   50   55   60   65   70   75   80
*   V    V    V    V    V    V    V    V    V    V    V    V    V    V    V    V
250.0      183.0        87.34       1.0       1.0       1.3
* code 1004
    1    0    2
* code 1005
   90    1
* code 1005a
* location traffic lanes
7.667
* maximum and minimum truck
6.667      80.673   10.000
* code 1007, linear loads
0.7350    0.441
86.605    0.441
* code 1201
   12    8    6    3    5
* code 1202 coordinates
0.0000    0.0
10.7917   0.0
10.7917   -7.938
27.7083   0.0
27.7083   -7.938
44.6250   0.0
44.6250   -7.938
65.2569   0.0
65.2569   -7.938
81.0903   0.0
81.0903   -7.938
87.3403   0.0
* code 1203 - profile 1
    5    3    4
0.0000    0.7500
5.2083    0.7500
7.7083    1.2083
10.2083   1.6667
10.7917   1.6667
* code 1203 - profile 2
    7    2    3    4
0.0000    1.6667
0.5833    1.6667
5.5833    0.7500
8.4583    0.7500
11.3333   0.7500
16.3333   1.6667
16.9167   1.6667
* code 1203 - profile 3
    7    2    3    4
0.0000    1.6667
0.5833    1.6667
5.5833    0.7500
10.3160   0.7500
15.0486   0.7500
20.0486   1.6667
20.6319   1.6667
* code 1203 - profile 4
    7    2    3    4
0.0000    1.6667
0.5833    1.6667
5.5833    0.7500
7.9167    0.7500
10.2500   0.7500
15.2500   1.6667
15.8333   1.6667
* code 1203 - profile 5
    4    2    3
0.0000    1.6667
0.5833    1.6667
3.4167    1.2083
6.2500    0.7500
* code 1203 - profile 6
    7    2    3    4
```

```
0.0000    1.4583
0.5833    1.4583
1.5833    0.4583
8.4583    0.4583
15.3333   0.4583
16.3333   1.4583
16.9167   1.4583
* code 1203 - profile 7
    7    2    3    4
0.0000    1.4583
0.5833    1.4583
1.5833    0.4583
7.9167    0.4583
14.2500   0.4583
15.2500   1.4583
15.8333   1.4583
* code 1203 - profile 8
    5    2    3
0.0000    1.1667
0.8334    1.1667
3.7709    1.1667
6.7084    1.1667
7.9375    1.1667
* code 1204 - assembling boxgirder
    1    2    1
    2    4    2
    4    6    2
    6    8    3
    8   10    4
   10   12    5
    3    5    6
    5    7    6
    9   11    7
    2    3    8
    4    5    8
    6    7    8
    8    9    8
   10   11    8
* code 1205 control code
    1    2   13    1    1    0    4    5     1.0       1.0
* code 1206 wheels/axle
       0.0
       1.5
       6.0
       7.5 0.833
* code 1207 definition axles
0.00      18.00
10.00     18.00
14.00     18.00
24.00     18.00
28.00     18.00
* code 1208 - accuracy
0.00001   0.00001   0.00001   .00001    .00001
* code 1209 number sections
   50
   1A   1B   1R   2L   2A   2B   2C   2R   3L   3A   3B   3C   3R
   4L   4A   4B   4C   4R   5L   5A   5B   5C   5R   6L   6A   6B
   7A   7B   7C   8A   8B   8C   9A   9B   9C  10L  10A  10B  11L  11A
  11B  12L  12A  12B  13L  13A  13B  14L  14A  14B
* code 1210 - density conrete
0.156
* code 1211 - extra forces selfweight

* code 1212 - surcharge
2.1835
* code 1213 - Prestressing Layout - NONE
```

```
* start ; column 11-30 can be used to have your own text on the top of each page
*   5   10   15   20   25   30   35   40   45   50   55   60   65   70   75   80
*   V    V    V    V    V    V    V    V    V    V    V    V    V    V    V    V
00001  1 1     VEH: R2 - TOLL ROAD LOADING No. 2 - Single Vehicle
* code 1001
Cline Avenue - Load Rating - Double Box  AND SINGLE BOX  - 87.34' WIDE
* code 1002
    2         1
* code 1003
*   5   10   15   20   25   30   35   40   45   50   55   60   65   70   75   80
*   V    V    V    V    V    V    V    V    V    V    V    V    V    V    V    V
250.0      183.0        87.34       1.0       1.0       1.3
* code 1004
    1    0    2
* code 1005
   90    1
* code 1005a
* location traffic lanes
7.667
* maximum and minimum truck
6.667      80.673   10.000
* code 1007, linear loads
0.7350    0.441
86.605    0.441
* code 1201
   12    8    6    3    5
* code 1202 coordinates
0.0000    0.0
10.7917   0.0
10.7917   -7.938
27.7083   0.0
27.7083   -7.938
44.6250   0.0
44.6250   -7.938
65.2569   0.0
65.2569   -7.938
81.0903   0.0
81.0903   -7.938
87.3403   0.0
* code 1203 - profile 1
    5    3    4
0.0000    0.7500
5.2083    0.7500
7.7083    1.2083
10.2083   1.6667
10.7917   1.6667
* code 1203 - profile 2
    7    2    3    4
0.0000    1.6667
0.5833    1.6667
5.5833    0.7500
8.4583    0.7500
11.3333   0.7500
16.3333   1.6667
16.9167   1.6667
* code 1203 - profile 3
    7    2    3    4
0.0000    1.6667
0.5833    1.6667
5.5833    0.7500
10.3160   0.7500
15.0486   0.7500
20.0486   1.6667
20.6319   1.6667
* code 1203 - profile 4
    7    2    3    4
0.0000    1.6667
0.5833    1.6667
5.5833    0.7500
7.9167    0.7500
10.2500   0.7500
15.2500   1.6667
15.8333   1.6667
* code 1203 - profile 5
    4    2    3
0.0000    1.6667
0.5833    1.6667
3.4167    1.2083
6.2500    0.7500
* code 1203 - profile 6
    7    2    3    4
```

```
0.0000    1.4583
0.5833    1.4583
1.5833    0.4583
8.4583    0.4583
15.3333   0.4583
16.3333   1.4583
16.9167   1.4583
* code 1203 - profile 7
    7    2    3    4
0.0000    1.4583
0.5833    1.4583
1.5833    0.4583
7.9167    0.4583
14.2500   0.4583
15.2500   1.4583
15.8333   1.4583
* code 1203 - profile 8
    5    2    3
0.0000    1.1667
0.8334    1.1667
3.7709    1.1667
6.7084    1.1667
7.9375    1.1667
* code 1204 - assembling boxgirder
    1    2    1
    2    4    2
    4    6    2
    6    8    3
    8   10    4
   10   12    5
    3    5    6
    5    7    6
    9   11    7
    2    3    8
    4    5    8
    6    7    8
    8    9    8
   10   11    8
* code 1205 control code
    1    2   13    1    1    0    4    4     1.0       1.0
* code 1206 wheels/axle
       0.0
       1.5
       6.0
       7.5 0.833
* code 1207 definition axles
0.00      22.50
14.00     22.50
23.00     22.50
37.00     22.50
* code 1208 - accuracy
0.00001   0.00001   0.00001   .00001    .00001
* code 1209 number sections
   50
   1A   1B   1R   2L   2A   2B   2C   2R   3L   3A   3B   3C   3R
   4L   4A   4B   4C   4R   5L   5A   5B   5C   5R   6L   6A   6B
   7A   7B   7C   8A   8B   8C   9A   9B   9C  10L  10A  10B  11L  11A
  11B  12L  12A  12B  13L  13A  13B  14L  14A  14B
* code 1210 - density conrete
0.156
* code 1211 - extra forces selfweight

* code 1212 - surcharge
2.1835
* code 1213 - Prestressing Layout - NONE
```

```
* start ; column 11-30 can be used to have your own text on the top of each page
*   5   10   15   20   25   30   35   40   45   50   55   60   65   70   75   80
*   V    V    V    V    V    V    V    V    V    V    V    V    V    V    V    V
00001  1 1     VEH: R3 - TOLL ROAD LOADING No. 3 - Single Vehicle
* code 1001
Cline Avenue - Load Rating - Double Box  AND SINGLE BOX  - 87.34' WIDE
* code 1002
    2         1
* code 1003
*   5   10   15   20   25   30   35   40   45   50   55   60   65   70   75   80
*   V    V    V    V    V    V    V    V    V    V    V    V    V    V    V    V
250.0      183.0        87.34       1.0       1.0       1.3
* code 1004
    1    0    2
* code 1005
  126    1
* code 1005a
* location traffic lanes
7.667
* maximum and minimum truck
6.667      80.673   10.000
* code 1007, linear loads
0.7350    0.441
86.605    0.441
* code 1201
   12    8    6    3    5
* code 1202 coordinates
0.0000    0.0
10.7917   0.0
10.7917   -7.938
27.7083   0.0
27.7083   -7.938
44.6250   0.0
44.6250   -7.938
65.2569   0.0
65.2569   -7.938
81.0903   0.0
81.0903   -7.938
87.3403   0.0
* code 1203 - profile 1
    5    3    4
0.0000    0.7500
5.2083    0.7500
7.7083    1.2083
10.2083   1.6667
10.7917   1.6667
* code 1203 - profile 2
    7    2    3    4
0.0000    1.6667
0.5833    1.6667
5.5833    0.7500
8.4583    0.7500
11.3333   0.7500
16.3333   1.6667
16.9167   1.6667
* code 1203 - profile 3
    7    2    3    4
0.0000    1.6667
0.5833    1.6667
5.5833    0.7500
10.3160   0.7500
15.0486   0.7500
20.0486   1.6667
20.6319   1.6667
* code 1203 - profile 4
    7    2    3    4
0.0000    1.6667
0.5833    1.6667
5.5833    0.7500
7.9167    0.7500
10.2500   0.7500
15.2500   1.6667
15.8333   1.6667
* code 1203 - profile 5
    4    2    3
0.0000    1.6667
0.5833    1.6667
3.4167    1.2083
6.2500    0.7500
* code 1203 - profile 6
    7    2    3    4
```

1_IV_A_R3_EL.txt 9/11/2009

```
0.0000    1.4583
0.5833    1.4583
1.5833    0.4583
8.4583    0.4583
15.3333   0.4583
16.3333   1.4583
16.9167   1.4583
* code 1203 - profile 7
    7    2    3    4
0.0000    1.4583
0.5833    1.4583
1.5833    0.4583
7.9167    0.4583
14.2500   0.4583
15.2500   1.4583
15.8333   1.4583
* code 1203 - profile 8
    5    2    3
0.0000    1.1667
0.8334    1.1667
3.7709    1.1667
6.7084    1.1667
7.9375    1.1667
* code 1204 - assembling boxgirder
    1    2    1
    2    4    2
    4    6    2
    6    8    3
    8   10    4
   10   12    5
    3    5    6
    5    7    6
    9   11    7
    2    3    8
    4    5    8
    6    7    8
    8    9    8
   10   11    8
* code 1205 control code
    1    2   13    1    1    0    4    7     1.0       1.0
* code 1206 wheels/axle
       0.0
       1.5
       6.0
       7.5 0.833
* code 1207 definition axles
0.00      18.00
10.00     18.00
14.00     18.00
40.00     18.00
44.00     18.00
56.00     18.00
76.00     18.00
* code 1208 - accuracy
0.00001   0.00001   0.00001   .00001    .00001
* code 1209 number sections
   50
   1A   1B   1R   2L   2A   2B   2C   2R   3L   3A   3B   3C   3R
   4L   4A   4B   4C   4R   5L   5A   5B   5C   5R   6L   6A   6B
   7A   7B   7C   8A   8B   8C   9A   9B   9C  10L  10A  10B  11L  11A
  11B  12L  12A  12B  13L  13A  13B  14L  14A  14B
* code 1210 - density conrete
0.156
* code 1211 - extra forces selfweight

* code 1212 - surcharge
2.1835
* code 1213 - Prestressing Layout - NONE
```

```
* start ; column 11-30 can be used to have your own text on the top of each page
00001  1 1     VEH: R4 - MICHIGAN TRUCK TRAIN No.5
* code 1001
Cline Avenue - Load Rating - Double Box  AND SINGLE BOX  - 87.34' WIDE
* code 1002
    2         1
* code 1003
*   5   10   15   20   25   30   35   40   45   50   55   60   65   70   75   80
*   V    V    V    V    V    V    V    V    V    V    V    V    V    V    V    V
250.0      183.0        87.34       1.0       1.0       1.3
* code 1004
    1    0    2
* code 1005
  134    1
* code 1005a
* location traffic lanes
7.667
* maximum and minimum truck
6.667      80.673   10.000
* code 1007, linear loads
0.7350    0.441
86.605    0.441
* code 1201
   12    8    6    3    5
* code 1202 coordinates
0.0000    0.0
10.7917   0.0
10.7917   -7.938
27.7083   0.0
27.7083   -7.938
44.6250   0.0
44.6250   -7.938
65.2569   0.0
65.2569   -7.938
81.0903   0.0
81.0903   -7.938
87.3403   0.0
* code 1203 - profile 1
    5    3    4
0.0000    0.7500
5.2083    0.7500
7.7083    1.2083
10.2083   1.6667
10.7917   1.6667
* code 1203 - profile 2
    7    2    3    4
0.0000    1.6667
0.5833    1.6667
5.5833    0.7500
8.4583    0.7500
11.3333   0.7500
16.3333   1.6667
16.9167   1.6667
* code 1203 - profile 3
    7    2    3    4
0.0000    1.6667
0.5833    1.6667
5.5833    0.7500
10.3160   0.7500
15.0486   0.7500
20.0486   1.6667
20.6319   1.6667
* code 1203 - profile 4
    7    2    3    4
0.0000    1.6667
0.5833    1.6667
5.5833    0.7500
7.9167    0.7500
10.2500   0.7500
15.2500   1.6667
15.8333   1.6667
* code 1203 - profile 5
    4    2    3
0.0000    1.6667
0.5833    1.6667
3.4167    1.2083
6.2500    0.7500
* code 1203 - profile 6
    7    2    3    4
0.0000    1.4583
0.5833    1.4583
```

```
1.5833    0.4583
8.4583    0.4583
15.3333   0.4583
16.3333   1.4583
16.9167   1.4583
* code 1203 - profile 7
    7    2    3    4
0.0000    1.4583
0.5833    1.4583
1.5833    0.4583
7.9167    0.4583
14.2500   0.4583
15.2500   1.4583
15.8333   1.4583
* code 1203 - profile 8
    5    2    3
0.0000    1.1667
0.8334    1.1667
3.7709    1.1667
6.7084    1.1667
7.9375    1.1667
* code 1204 - assembling boxgirder
    1    2    1
    2    4    2
    4    6    2
    6    8    3
    8   10    4
   10   12    5
    3    5    6
    5    7    6
    9   11    7
    2    3    8
    4    5    8
    6    7    8
    8    9    8
   10   11    8
* code 1205 control code
    1    2   13    1    1    0    4    8     1.0       1.0
* code 1206 wheels/axle
       0.0
       1.5
       6.0
       7.5 0.833
* code 1207 definition axles
0.00      12.00
9.00      16.00
12.50     16.00
21.50     18.00
30.50     18.00
39.50     18.00
48.50     18.00
57.50     18.00
* code 1208 - accuracy
0.00001   0.00001   0.00001   .00001    .00001
* code 1209 number sections
   50
   1A   1B   1R   2L   2A   2B   2C   2R   3L   3A   3B   3C   3R
   4L   4A   4B   4C   4R   5L   5A   5B   5C   5R   6L   6A   6B
   7A   7B   7C   8A   8B   8C   9A   9B   9C  10L  10A  10B  11L  11A
  11B  12L  12A  12B  13L  13A  13B  14L  14A  14B
* code 1210 - density conrete
0.156
* code 1211 - extra forces selfweight

* code 1212 - surcharge
2.1835
* code 1213 - Prestressing Layout - NONE
•
```

```
* start ; column 11-30 can be used to have your own text on the top of each page
00001  1 1     VEH: R5 - MICHIGAN TRUCK TRAIN No. 8
* code 1001
Cline Avenue - Load Rating - Double Box  AND SINGLE BOX  - 87.34' WIDE
* code 1002
    2         1
* code 1003
*   5   10   15   20   25   30   35   40   45   50   55   60   65   70   75   80
*   V    V    V    V    V    V    V    V    V    V    V    V    V    V    V    V
250.0      183.0        87.34       1.0       1.0       1.3
* code 1004
    1    0    2
* code 1005
* Vehicle weight is 134.2 Kips, rounded to 135
  135    1
* code 1005a
* location traffic lanes
7.667
* maximum and minimum truck
6.667      80.673   10.000
* code 1007, linear loads
0.7350    0.441
86.605    0.441
* code 1201
   12    8    6    3    5
* code 1202 coordinates
0.0000    0.0
10.7917   0.0
10.7917   -7.938
27.7083   0.0
27.7083   -7.938
44.6250   0.0
44.6250   -7.938
65.2569   0.0
65.2569   -7.938
81.0903   0.0
81.0903   -7.938
87.3403   0.0
* code 1203 - profile 1
    5    3    4
0.0000    0.7500
5.2083    0.7500
7.7083    1.2083
10.2083   1.6667
10.7917   1.6667
* code 1203 - profile 2
    7    2    3    4
0.0000    1.6667
0.5833    1.6667
5.5833    0.7500
8.4583    0.7500
11.3333   0.7500
16.3333   1.6667
16.9167   1.6667
* code 1203 - profile 3
    7    2    3    4
0.0000    1.6667
0.5833    1.6667
5.5833    0.7500
10.3160   0.7500
15.0486   0.7500
20.0486   1.6667
20.6319   1.6667
* code 1203 - profile 4
    7    2    3    4
0.0000    1.6667
0.5833    1.6667
5.5833    0.7500
7.9167    0.7500
10.2500   0.7500
15.2500   1.6667
15.8333   1.6667
* code 1203 - profile 5
    4    2    3
0.0000    1.6667
0.5833    1.6667
3.4167    1.2083
6.2500    0.7500
* code 1203 - profile 6
    7    2    3    4
0.0000    1.4583
```

```
0.5833    1.4583
1.5833    0.4583
8.4583    0.4583
15.3333   0.4583
16.3333   1.4583
16.9167   1.4583
* code 1203 - profile 7
    7    2    3    4
0.0000    1.4583
0.5833    1.4583
1.5833    0.4583
7.9167    0.4583
14.2500   0.4583
15.2500   1.4583
15.8333   1.4583
* code 1203 - profile 8
    5    2    3
0.0000    1.1667
0.8334    1.1667
3.7709    1.1667
6.7084    1.1667
7.9375    1.1667
* code 1204 - assembling boxgirder
    1    2    1
    2    4    2
    4    6    2
    6    8    3
    8   10    4
   10   12    5
    3    5    6
    5    7    6
    9   11    7
    2    3    8
    4    5    8
    6    7    8
    8    9    8
   10   11    8
* code 1205 control code
    1    2   13    1    1    0    4   11     1.0       1.0
* code 1206 wheels/axle
       0.0
       1.5
       6.0
       7.5 0.833
* code 1207 definition axles
0.00      12.00
9.00      13.40
12.50     13.40
21.50     10.90
25.00     10.90
28.50     10.90
32.00     10.90
35.50     10.90
39.00     10.90
48.00     15.00
57.00     15.00
* code 1208 - accuracy
0.00001   0.00001   0.00001   .00001    .00001
* code 1209 number sections
   50
   1A   1B   1R   2L   2A   2B   2C   2R   3L   3A   3B   3C   3R
   4L   4A   4B   4C   4R   5L   5A   5B   5C   5R   6L   6A   6B
   7A   7B   7C   8A   8B   8C   9A   9B   9C  10L  10A  10B  11L  11A
  11B  12L  12A  12B  13L  13A  13B  14L  14A  14B
* code 1210 - density conrete
0.156
* code 1211 - extra forces selfweight

* code 1212 - surcharge
2.1835
* code 1213 - Prestressing Layout - NONE
```

```
* start ; column 11-30 can be used to have your own text on the top of each page
*   5   10   15   20   25   30   35   40   45   50   55   60   65   70   75   80
*   V    V    V    V    V    V    V    V    V    V    V    V    V    V    V    V
00001  1 1     VEH: S1 - SPECIAL TRUCK 11 AXLE - Single Vehicle
* code 1001
Cline Avenue - Load Rating - Double Box  AND SINGLE BOX  - 87.34' WIDE
* code 1002
    2         1
* code 1003
*   5   10   15   20   25   30   35   40   45   50   55   60   65   70   75   80
*   V    V    V    V    V    V    V    V    V    V    V    V    V    V    V    V
250.0      183.0        87.34       1.0       1.0       1.3
* code 1004
    1    0    2
* code 1005
  258    1
* code 1005a
* location traffic lanes
7.667
* maximum and minimum truck
6.667      80.673   10.000
* code 1007, linear loads
0.7350    0.441
86.605    0.441
* code 1201
   12    8    6    3    5
* code 1202 coordinates
0.0000    0.0
10.7917   0.0
10.7917   -7.938
27.7083   0.0
27.7083   -7.938
44.6250   0.0
44.6250   -7.938
65.2569   0.0
65.2569   -7.938
81.0903   0.0
81.0903   -7.938
87.3403   0.0
* code 1203 - profile 1
    5    3    4
0.0000    0.7500
5.2083    0.7500
7.7083    1.2083
10.2083   1.6667
10.7917   1.6667
* code 1203 - profile 2
    7    2    3    4
0.0000    1.6667
0.5833    1.6667
5.5833    0.7500
8.4583    0.7500
11.3333   0.7500
16.3333   1.6667
16.9167   1.6667
* code 1203 - profile 3
    7    2    3    4
0.0000    1.6667
0.5833    1.6667
5.5833    0.7500
10.3160   0.7500
15.0486   0.7500
20.0486   1.6667
20.6319   1.6667
* code 1203 - profile 4
    7    2    3    4
0.0000    1.6667
0.5833    1.6667
5.5833    0.7500
7.9167    0.7500
10.2500   0.7500
15.2500   1.6667
15.8333   1.6667
* code 1203 - profile 5
    4    2    3
0.0000    1.6667
0.5833    1.6667
3.4167    1.2083
6.2500    0.7500
* code 1203 - profile 6
    7    2    3    4
```

```
0.0000    1.4583
0.5833    1.4583
1.5833    0.4583
8.4583    0.4583
15.3333   0.4583
16.3333   1.4583
16.9167   1.4583
* code 1203 - profile 7
    7    2    3    4
0.0000    1.4583
0.5833    1.4583
1.5833    0.4583
7.9167    0.4583
14.2500   0.4583
15.2500   1.4583
15.8333   1.4583
* code 1203 - profile 8
    5    2    3
0.0000    1.1667
0.8334    1.1667
3.7709    1.1667
6.7084    1.1667
7.9375    1.1667
* code 1204 - assembling boxgirder
    1    2    1
    2    4    2
    4    6    2
    6    8    3
    8   10    4
   10   12    5
    3    5    6
    5    7    6
    9   11    7
    2    3    8
    4    5    8
    6    7    8
    8    9    8
   10   11    8
* code 1205 control code
    1    2   13    1    1    0    4   11     1.0       1.0
* code 1206 wheels/axle
       0.0
       1.5
       6.0
       7.5 0.833
* code 1207 definition axles
0.00      12.00
11.50     24.60
16.67     24.60
21.67     24.60
34.83     24.60
39.33     24.60
89.92     24.60
94.42     24.60
98.92     24.60
112.50     24.60
117.00     24.60
* code 1208 - accuracy
0.00001   0.00001   0.00001   .00001    .00001
* code 1209 number sections
   50
   1A   1B   1R   2L   2A   2B   2C   2R   3L   3A   3B   3C   3R
   4L   4A   4B   4C   4R   5L   5A   5B   5C   5R   6L   6A   6B
   7A   7B   7C   8A   8B   8C   9A   9B   9C  10L  10A  10B  11L  11A
  11B  12L  12A  12B  13L  13A  13B  14L  14A  14B
* code 1210 - density conrete
0.156
* code 1211 - extra forces selfweight

* code 1212 - surcharge
2.1835
* code 1213 - Prestressing Layout - NONE
•
```

```
* start ; column 11-30 can be used to have your own text on the top of each page
*   5   10   15   20   25   30   35   40   45   50   55   60   65   70   75   80
*   V    V    V    V    V    V    V    V    V    V    V    V    V    V    V    V
00001  1 1     VEH: S2 - SPECIAL TRUCK - 13 AXLE - Single Vehicle
* code 1001
Cline Avenue - Load Rating - Double Box  AND SINGLE BOX  - 87.34' WIDE
* code 1002
    2         1
* code 1003
*   5   10   15   20   25   30   35   40   45   50   55   60   65   70   75   80
*   V    V    V    V    V    V    V    V    V    V    V    V    V    V    V    V
250.0      183.0        87.34       1.0       1.0       1.3
* code 1004
    1    0    2
* code 1005
  267    1
* code 1005a
* location traffic lanes
7.667
* maximum and minimum truck
6.667      80.673   10.000
* code 1007, linear loads
0.7350    0.441
86.605    0.441
* code 1201
   12    8    6    3    5
* code 1202 coordinates
0.0000    0.0
10.7917   0.0
10.7917   -7.938
27.7083   0.0
27.7083   -7.938
44.6250   0.0
44.6250   -7.938
65.2569   0.0
65.2569   -7.938
81.0903   0.0
81.0903   -7.938
87.3403   0.0
* code 1203 - profile 1
    5    3    4
0.0000    0.7500
5.2083    0.7500
7.7083    1.2083
10.2083   1.6667
10.7917   1.6667
* code 1203 - profile 2
    7    2    3    4
0.0000    1.6667
0.5833    1.6667
5.5833    0.7500
8.4583    0.7500
11.3333   0.7500
16.3333   1.6667
16.9167   1.6667
* code 1203 - profile 3
    7    2    3    4
0.0000    1.6667
0.5833    1.6667
5.5833    0.7500
10.3160   0.7500
15.0486   0.7500
20.0486   1.6667
20.6319   1.6667
* code 1203 - profile 4
    7    2    3    4
0.0000    1.6667
0.5833    1.6667
5.5833    0.7500
7.9167    0.7500
10.2500   0.7500
15.2500   1.6667
15.8333   1.6667
* code 1203 - profile 5
    4    2    3
0.0000    1.6667
0.5833    1.6667
3.4167    1.2083
6.2500    0.7500
* code 1203 - profile 6
    7    2    3    4
```

```
0.0000    1.4583
0.5833    1.4583
1.5833    0.4583
8.4583    0.4583
15.3333   0.4583
16.3333   1.4583
16.9167   1.4583
* code 1203 - profile 7
    7    2    3    4
0.0000    1.4583
0.5833    1.4583
1.5833    0.4583
7.9167    0.4583
14.2500   0.4583
15.2500   1.4583
15.8333   1.4583
* code 1203 - profile 8
    5    2    3
0.0000    1.1667
0.8334    1.1667
3.7709    1.1667
6.7084    1.1667
7.9375    1.1667
* code 1204 - assembling boxgirder
    1    2    1
    2    4    2
    4    6    2
    6    8    3
    8   10    4
   10   12    5
    3    5    6
    5    7    6
    9   11    7
    2    3    8
    4    5    8
    6    7    8
    8    9    8
   10   11    8
* code 1205 control code
    1    2   13    1    1    0    4   13     1.0       1.0
* code 1206 wheels/axle
       0.0
       1.5
       6.0
       7.5 0.833
* code 1207 definition axles
0.00      15.00
16.50     21.00
21.00     21.00
25.50     21.00
39.50     21.00
44.00     21.00
48.50     21.00
96.50     21.00
101.00    21.00
105.50    21.00
121.00    21.00
125.50    21.00
130.00    21.00
* code 1208 - accuracy
0.00001   0.00001   0.00001   .00001    .00001
* code 1209 number sections
   50
   1A   1B   1R   2L   2A   2B   2C   2R   3L   3A   3B   3C   3R
   4L   4A   4B   4C   4R   5L   5A   5B   5C   5R   6L   6A   6B
   7A   7B   7C   8A   8B   8C   9A   9B   9C  10L  10A  10B  11L  11A
  11B  12L  12A  12B  13L  13A  13B  14L  14A  14B
* code 1210 - density conrete
0.156
* code 1211 - extra forces selfweight

* code 1212 - surcharge
2.1835
* code 1213 - Prestressing Layout - NONE
```

```
* start ; column 11-30 can be used to have your own text on the top of each page
*   5   10   15   20   25   30   35   40   45   50   55   60   65   70   75   80
*   V    V    V    V    V    V    V    V    V    V    V    V    V    V    V    V
00001  1 1     VEH: S3 - SPECIAL TRUCK - 14 AXLE - Single Vehicle
* code 1001
Cline Avenue - Load Rating - Double Box  AND SINGLE BOX  - 87.34' WIDE
* code 1002
    2         1
* code 1003
*   5   10   15   20   25   30   35   40   45   50   55   60   65   70   75   80
*   V    V    V    V    V    V    V    V    V    V    V    V    V    V    V    V
250.0      183.0        87.34       1.0       1.0       1.3
* code 1004
    1    0    2
* code 1005
  350    1
* code 1005a
* location traffic lanes
7.667
* maximum and minimum truck
6.667      80.673   10.000
* code 1007, linear loads
0.7350    0.441
86.605    0.441
* code 1201
   12    8    6    3    5
* code 1202 coordinates
0.0000    0.0
10.7917   0.0
10.7917   -7.938
27.7083   0.0
27.7083   -7.938
44.6250   0.0
44.6250   -7.938
65.2569   0.0
65.2569   -7.938
81.0903   0.0
81.0903   -7.938
87.3403   0.0
* code 1203 - profile 1
    5    3    4
0.0000    0.7500
5.2083    0.7500
7.7083    1.2083
10.2083   1.6667
10.7917   1.6667
* code 1203 - profile 2
    7    2    3    4
0.0000    1.6667
0.5833    1.6667
5.5833    0.7500
8.4583    0.7500
11.3333   0.7500
16.3333   1.6667
16.9167   1.6667
* code 1203 - profile 3
    7    2    3    4
0.0000    1.6667
0.5833    1.6667
5.5833    0.7500
10.3160   0.7500
15.0486   0.7500
20.0486   1.6667
20.6319   1.6667
* code 1203 - profile 4
    7    2    3    4
0.0000    1.6667
0.5833    1.6667
5.5833    0.7500
7.9167    0.7500
10.2500   0.7500
15.2500   1.6667
15.8333   1.6667
* code 1203 - profile 5
    4    2    3
0.0000    1.6667
0.5833    1.6667
3.4167    1.2083
6.2500    0.7500
* code 1203 - profile 6
    7    2    3    4
```

```
0.0000    1.4583
0.5833    1.4583
1.5833    0.4583
8.4583    0.4583
15.3333   0.4583
16.3333   1.4583
16.9167   1.4583
* code 1203 - profile 7
    7    2    3    4
0.0000    1.4583
0.5833    1.4583
1.5833    0.4583
7.9167    0.4583
14.2500   0.4583
15.2500   1.4583
15.8333   1.4583
* code 1203 - profile 8
    5    2    3
0.0000    1.1667
0.8334    1.1667
3.7709    1.1667
6.7084    1.1667
7.9375    1.1667
* code 1204 - assembling boxgirder
    1    2    1
    2    4    2
    4    6    2
    6    8    3
    8   10    4
   10   12    5
    3    5    6
    5    7    6
    9   11    7
    2    3    8
    4    5    8
    6    7    8
    8    9    8
   10   11    8
* code 1205 control code
    1    2   13    1    1    0    4   14     1.0       1.0
* code 1206 wheels/axle
       0.0
       1.5
       6.0
       7.5 0.833
* code 1207 definition axles
0.00      13.00
14.50     25.00
19.00     25.00
23.50     25.00
50.50     23.50
54.67     23.50
58.83     23.50
102.83    23.50
107.33    28.00
111.83    28.00
116.33    28.00
132.17    28.00
136.67    28.00
141.17    28.00
* code 1208 - accuracy
0.00001   0.00001   0.00001   .00001    .00001
* code 1209 number sections
   50
   1A   1B   1R   2L   2A   2B   2C   2R   3L   3A   3B   3C   3R
   4L   4A   4B   4C   4R   5L   5A   5B   5C   5R   6L   6A   6B
   7A   7B   7C   8A   8B   8C   9A   9B   9C  10L  10A  10B  11L  11A
  11B  12L  12A  12B  13L  13A  13B  14L  14A  14B
* code 1210 - density conrete
0.156
* code 1211 - extra forces selfweight

* code 1212 - surcharge
2.1835
* code 1213 - Prestressing Layout - NONE
```

```
* start ; column 11-30 can be used to have your own text on the top of each page
*   5   10   15   20   25   30   35   40   45   50   55   60   65   70   75   80
*   V    V    V    V    V    V    V    V    V    V    V    V    V    V    V    V
00001  1 1     VEH: S4 - SUPER LOAD -19 AXLES - Single Vehicle
* code 1001
Cline Avenue - Load Rating - Double Box  AND SINGLE BOX  - 87.34' WIDE
* code 1002
    2         1
* code 1003
*   5   10   15   20   25   30   35   40   45   50   55   60   65   70   75   80
*   V    V    V    V    V    V    V    V    V    V    V    V    V    V    V    V
250.0      183.0        87.34       1.0       1.0       1.3
* code 1004
    1    0    2
* code 1005
  305    1
* code 1005a
* location traffic lanes
7.667
* maximum and minimum truck
6.667      80.673   10.000
* code 1007, linear loads
0.7350    0.441
86.605    0.441
* code 1201
   12    8    6    3    5
* code 1202 coordinates
0.0000    0.0
10.7917   0.0
10.7917   -7.938
27.7083   0.0
27.7083   -7.938
44.6250   0.0
44.6250   -7.938
65.2569   0.0
65.2569   -7.938
81.0903   0.0
81.0903   -7.938
87.3403   0.0
* code 1203 - profile 1
    5    3    4
0.0000    0.7500
5.2083    0.7500
7.7083    1.2083
10.2083   1.6667
10.7917   1.6667
* code 1203 - profile 2
    7    2    3    4
0.0000    1.6667
0.5833    1.6667
5.5833    0.7500
8.4583    0.7500
11.3333   0.7500
16.3333   1.6667
16.9167   1.6667
* code 1203 - profile 3
    7    2    3    4
0.0000    1.6667
0.5833    1.6667
5.5833    0.7500
10.3160   0.7500
15.0486   0.7500
20.0486   1.6667
20.6319   1.6667
* code 1203 - profile 4
    7    2    3    4
0.0000    1.6667
0.5833    1.6667
5.5833    0.7500
7.9167    0.7500
10.2500   0.7500
15.2500   1.6667
15.8333   1.6667
* code 1203 - profile 5
    4    2    3
0.0000    1.6667
0.5833    1.6667
3.4167    1.2083
6.2500    0.7500
* code 1203 - profile 6
    7    2    3    4
```

```
0.0000    1.4583
0.5833    1.4583
1.5833    0.4583
8.4583    0.4583
15.3333   0.4583
16.3333   1.4583
16.9167   1.4583
* code 1203 - profile 7
    7    2    3    4
0.0000    1.4583
0.5833    1.4583
1.5833    0.4583
7.9167    0.4583
14.2500   0.4583
15.2500   1.4583
15.8333   1.4583
* code 1203 - profile 8
    5    2    3
0.0000    1.1667
0.8334    1.1667
3.7709    1.1667
6.7084    1.1667
7.9375    1.1667
* code 1204 - assembling boxgirder
    1    2    1
    2    4    2
    4    6    2
    6    8    3
    8   10    4
   10   12    5
    3    5    6
    5    7    6
    9   11    7
    2    3    8
    4    5    8
    6    7    8
    8    9    8
   10   11    8
* code 1205 control code
    1    2   13    1    1    0    4   19     1.0       1.0
* code 1206 wheels/axle
       0.0
       1.5
       6.0
       7.5 0.833
* code 1207 definition axles
0.00      13.00
13.50     16.48
17.83     16.48
31.33     16.48
35.42     15.99
39.50     15.99
45.50     15.99
49.58     16.37
53.67     16.37
103.58    16.37
107.67    16.64
114.17    16.64
118.25    15.15
122.33    15.15
126.42    15.15
135.92    15.15
140.00    17.20
144.08    17.20
148.17    17.20
* code 1208 - accuracy
0.00001   0.00001   0.00001   .00001    .00001
* code 1209 number sections
   50
   1A   1B   1R   2L   2A   2B   2C   2R   3L   3A   3B   3C   3R
   4L   4A   4B   4C   4R   5L   5A   5B   5C   5R   6L   6A   6B
   7A   7B   7C   8A   8B   8C   9A   9B   9C  10L  10A  10B  11L  11A
  11B  12L  12A  12B  13L  13A  13B  14L  14A  14B
* code 1210 - density conrete
0.156
* code 1211 - extra forces selfweight

* code 1212 - surcharge
2.1835
* code 1213 - Prestressing Layout - NONE
```

```
* start ; column 11-30 can be used to have your own text on the top of each page
*   5   10   15   20   25   30   35   40   45   50   55   60   65   70   75   80
*   V    V    V    V    V    V    V    V    V    V    V    V    V    V    V    V
00001  1 1     VEH: S5 - SUPERLOAD - 19 AXLE - Single Vehicle
* code 1001
Cline Avenue - Load Rating - Double Box  AND SINGLE BOX  - 87.34' WIDE
* code 1002
    2         1
* code 1003
*   5   10   15   20   25   30   35   40   45   50   55   60   65   70   75   80
*   V    V    V    V    V    V    V    V    V    V    V    V    V    V    V    V
250.0      183.0        87.34       1.0       1.0       1.3
* code 1004
    1    0    2
* code 1005
  480    1
* code 1005a
* location traffic lanes
7.667     19.667
* maximum and minimum truck
6.667      80.673   10.000
* code 1007, linear loads
0.7350    0.441
86.605    0.441
* code 1201
   12    8    6    3    5
* code 1202 coordinates
0.0000    0.0
10.7917   0.0
10.7917   -7.938
27.7083   0.0
27.7083   -7.938
44.6250   0.0
44.6250   -7.938
65.2569   0.0
65.2569   -7.938
81.0903   0.0
81.0903   -7.938
87.3403   0.0
* code 1203 - profile 1
    5    3    4
0.0000    0.7500
5.2083    0.7500
7.7083    1.2083
10.2083   1.6667
10.7917   1.6667
* code 1203 - profile 2
    7    2    3    4
0.0000    1.6667
0.5833    1.6667
5.5833    0.7500
8.4583    0.7500
11.3333   0.7500
16.3333   1.6667
16.9167   1.6667
* code 1203 - profile 3
    7    2    3    4
0.0000    1.6667
0.5833    1.6667
5.5833    0.7500
10.3160   0.7500
15.0486   0.7500
20.0486   1.6667
20.6319   1.6667
* code 1203 - profile 4
    7    2    3    4
0.0000    1.6667
0.5833    1.6667
5.5833    0.7500
7.9167    0.7500
10.2500   0.7500
15.2500   1.6667
15.8333   1.6667
* code 1203 - profile 5
    4    2    3
0.0000    1.6667
0.5833    1.6667
3.4167    1.2083
6.2500    0.7500
* code 1203 - profile 6
    7    2    3    4
```

```
0.0000    1.4583
0.5833    1.4583
1.5833    0.4583
8.4583    0.4583
15.3333   0.4583
16.3333   1.4583
16.9167   1.4583
* code 1203 - profile 7
    7    2    3    4
0.0000    1.4583
0.5833    1.4583
1.5833    0.4583
7.9167    0.4583
14.2500   0.4583
15.2500   1.4583
15.8333   1.4583
* code 1203 - profile 8
    5    2    3
0.0000    1.1667
0.8334    1.1667
3.7709    1.1667
6.7084    1.1667
7.9375    1.1667
* code 1204 - assembling boxgirder
    1    2    1
    2    4    2
    4    6    2
    6    8    3
    8   10    4
   10   12    5
    3    5    6
    5    7    6
    9   11    7
    2    3    8
    4    5    8
    6    7    8
    8    9    8
   10   11    8
* code 1205 control code
    1    2   13    1    1    0    4   19     1.0       1.0
* code 1206 wheels/axle
       0.0
       1.5
       6.0
       7.5 0.833
* code 1207 definition axles
0.00      12.88
12.50     25.95
17.50     25.95
31.58     25.95
36.58     25.95
41.58     25.95
55.67     25.95
60.67     25.95
65.67     25.95
115.67    25.95
120.67    25.95
125.67    25.95
139.75    25.95
144.75    25.95
149.75    25.95
163.83    25.95
168.83    25.95
173.83    25.95
178.83    25.95
* code 1208 - accuracy
0.00001   0.00001   0.00001   .00001    .00001
* code 1209 number sections
   50
   1A   1B   1R   2L   2A   2B   2C   2R   3L   3A   3B   3C   3R
   4L   4A   4B   4C   4R   5L   5A   5B   5C   5R   6L   6A   6B
   7A   7B   7C   8A   8B   8C   9A   9B   9C  10L  10A  10B  11L  11A
  11B  12L  12A  12B  13L  13A  13B  14L  14A  14B
* code 1210 - density conrete
0.156
* code 1211 - extra forces selfweight

* code 1212 - surcharge
2.1835
* code 1213 - Prestressing Layout - NONE
•
```

```
* start ; column 11-30 can be used to have your own text on the top of each page
*   5   10   15   20   25   30   35   40   45   50   55   60   65   70   75   80
*   V    V    V    V    V    V    V    V    V    V    V    V    V    V    V    V
00001  1 1     VEH: HL93 TRUCK
* code 1001
Cline Avenue - Load Rating - Double Box  AND SINGLE BOX  - 87.34' WIDE
* code 1002
    2         1
* code 1003
*   5   10   15   20   25   30   35   40   45   50   55   60   65   70   75   80
*   V    V    V    V    V    V    V    V    V    V    V    V    V    V    V    V
250.0      183.0        87.34       1.0       1.0       1.3
* code 1004
    2    0    2
* code 1005
   72
* code 1005a
* location traffic lanes
7.667     19.667
* maximum and minimum truck
6.667      80.673   10.000
* code 1007, linear loads
0.7350    0.441
86.605    0.441
* code 1201
   12    8    6    3    5
* code 1202 coordinates
0.0000    0.0
10.7917   0.0
10.7917   -7.938
27.7083   0.0
27.7083   -7.938
44.6250   0.0
44.6250   -7.938
65.2569   0.0
65.2569   -7.938
81.0903   0.0
81.0903   -7.938
87.3403   0.0
* code 1203 - profile 1
    5    3    4
0.0000    0.7500
5.2083    0.7500
7.7083    1.2083
10.2083   1.6667
10.7917   1.6667
* code 1203 - profile 2
    7    2    3    4
0.0000    1.6667
0.5833    1.6667
5.5833    0.7500
8.4583    0.7500
11.3333   0.7500
16.3333   1.6667
16.9167   1.6667
* code 1203 - profile 3
    7    2    3    4
0.0000    1.6667
0.5833    1.6667
5.5833    0.7500
10.3160   0.7500
15.0486   0.7500
20.0486   1.6667
20.6319   1.6667
* code 1203 - profile 4
    7    2    3    4
0.0000    1.6667
0.5833    1.6667
5.5833    0.7500
7.9167    0.7500
10.2500   0.7500
15.2500   1.6667
15.8333   1.6667
* code 1203 - profile 5
    4    2    3
0.0000    1.6667
0.5833    1.6667
3.4167    1.2083
6.2500    0.7500
* code 1203 - profile 6
    7    2    3    4
```

```
0.0000    1.4583
0.5833    1.4583
1.5833    0.4583
8.4583    0.4583
15.3333   0.4583
16.3333   1.4583
16.9167   1.4583
* code 1203 - profile 7
    7    2    3    4
0.0000    1.4583
0.5833    1.4583
1.5833    0.4583
7.9167    0.4583
14.2500   0.4583
15.2500   1.4583
15.8333   1.4583
* code 1203 - profile 8
    5    2    3
0.0000    1.1667
0.8334    1.1667
3.7709    1.1667
6.7084    1.1667
7.9375    1.1667
* code 1204 - assembling boxgirder
    1    2    1
    2    4    2
    4    6    2
    6    8    3
    8   10    4
   10   12    5
    3    5    6
    5    7    6
    9   11    7
    2    3    8
    4    5    8
    6    7    8
    8    9    8
   10   11    8
* code 1205 control code
    1    2   13    1    1    0    4    3     1.0       1.0
* code 1206 wheels/axle
       0.0
       1.5
       6.0
       7.5 0.833
* code 1207 definition axles
0.0       0.1
14.0      0.4
28.0      0.4
* code 1208 - accuracy
0.00001   0.00001   0.00001   .00001    .00001
* code 1209 number sections
   50
   1A   1B   1R   2L   2A   2B   2C   2R   3L   3A   3B   3C   3R
   4L   4A   4B   4C   4R   5L   5A   5B   5C   5R   6L   6A   6B
   7A   7B   7C   8A   8B   8C   9A   9B   9C  10L  10A  10B  11L  11A
  11B  12L  12A  12B  13L  13A  13B  14L  14A  14B
* code 1210 - density conrete
0.156
* code 1211 - extra forces selfweight

* code 1212 - surcharge
2.1835
* code 1213 - Prestressing Layout - NONE
```

IV_A_HL93_tandem_EL.txt 9/11/2009

```
* start ; column 11-30 can be used to have your own text on the top of each page
*   5   10   15   20   25   30   35   40   45   50   55   60   65   70   75   80
*   V    V    V    V    V    V    V    V    V    V    V    V    V    V    V    V
00001  1 1     VEH: HL93- TANDEM
* code 1001
Cline Avenue - Load Rating - Double Box  AND SINGLE BOX  - 87.34' WIDE
* code 1002
    2         1
* code 1003
*   5   10   15   20   25   30   35   40   45   50   55   60   65   70   75   80
*   V    V    V    V    V    V    V    V    V    V    V    V    V    V    V    V
250.0      183.0        87.34       1.0       1.0       1.3
* code 1004
    2    0    2
* code 1005
   50
* code 1005a
* location traffic lanes
7.667     19.667
* maximum and minimum truck
6.667      80.673   10.000
* code 1007, linear loads
0.7350    0.441
86.605    0.441
* code 1201
   12    8    6    3    5
* code 1202 coordinates
0.0000    0.0
10.7917   0.0
10.7917   -7.938
27.7083   0.0
27.7083   -7.938
44.6250   0.0
44.6250   -7.938
65.2569   0.0
65.2569   -7.938
81.0903   0.0
81.0903   -7.938
87.3403   0.0
* code 1203 - profile 1
    5    3    4
0.0000    0.7500
5.2083    0.7500
7.7083    1.2083
10.2083   1.6667
10.7917   1.6667
* code 1203 - profile 2
    7    2    3    4
0.0000    1.6667
0.5833    1.6667
5.5833    0.7500
8.4583    0.7500
11.3333   0.7500
16.3333   1.6667
16.9167   1.6667
* code 1203 - profile 3
    7    2    3    4
0.0000    1.6667
0.5833    1.6667
5.5833    0.7500
10.3160   0.7500
15.0486   0.7500
20.0486   1.6667
20.6319   1.6667
* code 1203 - profile 4
    7    2    3    4
0.0000    1.6667
0.5833    1.6667
5.5833    0.7500
7.9167    0.7500
10.2500   0.7500
15.2500   1.6667
15.8333   1.6667
* code 1203 - profile 5
    4    2    3
0.0000    1.6667
0.5833    1.6667
3.4167    1.2083
6.2500    0.7500
* code 1203 - profile 6
    7    2    3    4
```

```
0.0000    1.4583
0.5833    1.4583
1.5833    0.4583
8.4583    0.4583
15.3333   0.4583
16.3333   1.4583
16.9167   1.4583
* code 1203 - profile 7
    7    2    3    4
0.0000    1.4583
0.5833    1.4583
1.5833    0.4583
7.9167    0.4583
14.2500   0.4583
15.2500   1.4583
15.8333   1.4583
* code 1203 - profile 8
    5    2    3
0.0000    1.1667
0.8334    1.1667
3.7709    1.1667
6.7084    1.1667
7.9375    1.1667
* code 1204 - assembling boxgirder
    1    2    1
    2    4    2
    4    6    2
    6    8    3
    8   10    4
   10   12    5
    3    5    6
    5    7    6
    9   11    7
    2    3    8
    4    5    8
    6    7    8
    8    9    8
   10   11    8
* code 1205 control code
    1    2   13    1    1    0    4    2     1.0       1.0
* code 1206 wheels/axle
       0.0
       1.5
       6.0
       7.5 0.833
* code 1207 definition axles
0.0       0.5
4.0       0.5
* code 1208 - accuracy
0.00001   0.00001   0.00001   .00001    .00001
* code 1209 number sections
   50
   1A   1B   1R   2L   2A   2B   2C   2R   3L   3A   3B   3C   3R
   4L   4A   4B   4C   4R   5L   5A   5B   5C   5R   6L   6A   6B
   7A   7B   7C   8A   8B   8C   9A   9B   9C  10L  10A  10B  11L  11A
  11B  12L  12A  12B  13L  13A  13B  14L  14A  14B
* code 1210 - density conrete
0.156
* code 1211 - extra forces selfweight

* code 1212 - surcharge
2.1835
* code 1213 - Prestressing Layout - NONE
•
```

```
* start ; column 11-30 can be used to have your own text on the top of each page
*   5   10   15   20   25   30   35   40   45   50   55   60   65   70   75   80
*   V    V    V    V    V    V    V    V    V    V    V    V    V    V    V    V
00001  1 1     VEH: R1 - TOLL ROAD LOADING No. 1
* code 1001
Cline Avenue - Load Rating - Double Box  AND SINGLE BOX  - 87.34' WIDE
* code 1002
    2         1
* code 1003
*   5   10   15   20   25   30   35   40   45   50   55   60   65   70   75   80
*   V    V    V    V    V    V    V    V    V    V    V    V    V    V    V    V
250.0      183.0        87.34       1.0       1.0       1.3
* code 1004
    2    0    2
* code 1005
   90
* code 1005a
* location traffic lanes
7.667     19.667
* maximum and minimum truck
6.667      80.673   10.000
* code 1007, linear loads
0.7350    0.441
86.605    0.441
* code 1201
   12    8    6    3    5
* code 1202 coordinates
0.0000    0.0
10.7917   0.0
10.7917   -7.938
27.7083   0.0
27.7083   -7.938
44.6250   0.0
44.6250   -7.938
65.2569   0.0
65.2569   -7.938
81.0903   0.0
81.0903   -7.938
87.3403   0.0
* code 1203 - profile 1
    5    3    4
0.0000    0.7500
5.2083    0.7500
7.7083    1.2083
10.2083   1.6667
10.7917   1.6667
* code 1203 - profile 2
    7    2    3    4
0.0000    1.6667
0.5833    1.6667
5.5833    0.7500
8.4583    0.7500
11.3333   0.7500
16.3333   1.6667
16.9167   1.6667
* code 1203 - profile 3
    7    2    3    4
0.0000    1.6667
0.5833    1.6667
5.5833    0.7500
10.3160   0.7500
15.0486   0.7500
20.0486   1.6667
20.6319   1.6667
* code 1203 - profile 4
    7    2    3    4
0.0000    1.6667
0.5833    1.6667
5.5833    0.7500
7.9167    0.7500
10.2500   0.7500
15.2500   1.6667
15.8333   1.6667
* code 1203 - profile 5
    4    2    3
0.0000    1.6667
0.5833    1.6667
3.4167    1.2083
6.2500    0.7500
* code 1203 - profile 6
    7    2    3    4
```

```
0.0000    1.4583
0.5833    1.4583
1.5833    0.4583
8.4583    0.4583
15.3333   0.4583
16.3333   1.4583
16.9167   1.4583
* code 1203 - profile 7
    7    2    3    4
0.0000    1.4583
0.5833    1.4583
1.5833    0.4583
7.9167    0.4583
14.2500   0.4583
15.2500   1.4583
15.8333   1.4583
* code 1203 - profile 8
    5    2    3
0.0000    1.1667
0.8334    1.1667
3.7709    1.1667
6.7084    1.1667
7.9375    1.1667
* code 1204 - assembling boxgirder
    1    2    1
    2    4    2
    4    6    2
    6    8    3
    8   10    4
   10   12    5
    3    5    6
    5    7    6
    9   11    7
    2    3    8
    4    5    8
    6    7    8
    8    9    8
   10   11    8
* code 1205 control code
    1    2   13    1    1    0    4    5     1.0       1.0
* code 1206 wheels/axle
       0.0
       1.5
       6.0
       7.5 0.833
* code 1207 definition axles
0.00      18.00
10.00     18.00
14.00     18.00
24.00     18.00
28.00     18.00
* code 1208 - accuracy
0.00001   0.00001   0.00001   .00001    .00001
* code 1209 number sections
   50
   1A   1B   1R   2L   2A   2B   2C   2R   3L   3A   3B   3C   3R
   4L   4A   4B   4C   4R   5L   5A   5B   5C   5R   6L   6A   6B
   7A   7B   7C   8A   8B   8C   9A   9B   9C  10L  10A  10B  11L  11A
  11B  12L  12A  12B  13L  13A  13B  14L  14A  14B
* code 1210 - density conrete
0.156
* code 1211 - extra forces selfweight

* code 1212 - surcharge
2.1835
* code 1213 - Prestressing Layout - NONE
```

IV_A_R2_EL.txt 9/11/2009

```
* start ; column 11-30 can be used to have your own text on the top of each page
*   5   10   15   20   25   30   35   40   45   50   55   60   65   70   75   80
*   V    V    V    V    V    V    V    V    V    V    V    V    V    V    V    V
00001  1 1     VEH: R2 - TOLL ROAD LOADING No. 2
* code 1001
Cline Avenue - Load Rating - Double Box  AND SINGLE BOX  - 87.34' WIDE
* code 1002
    2         1
* code 1003
*   5   10   15   20   25   30   35   40   45   50   55   60   65   70   75   80
*   V    V    V    V    V    V    V    V    V    V    V    V    V    V    V    V
250.0      183.0        87.34       1.0       1.0       1.3
* code 1004
    2    0    2
* code 1005
   90
* code 1005a
* location traffic lanes
7.667     19.667
* maximum and minimum truck
6.667      80.673   10.000
* code 1007, linear loads
0.7350    0.441
86.605    0.441
* code 1201
   12    8    6    3    5
* code 1202 coordinates
0.0000    0.0
10.7917   0.0
10.7917   -7.938
27.7083   0.0
27.7083   -7.938
44.6250   0.0
44.6250   -7.938
65.2569   0.0
65.2569   -7.938
81.0903   0.0
81.0903   -7.938
87.3403   0.0
* code 1203 - profile 1
    5    3    4
0.0000    0.7500
5.2083    0.7500
7.7083    1.2083
10.2083   1.6667
10.7917   1.6667
* code 1203 - profile 2
    7    2    3    4
0.0000    1.6667
0.5833    1.6667
5.5833    0.7500
8.4583    0.7500
11.3333   0.7500
16.3333   1.6667
16.9167   1.6667
* code 1203 - profile 3
    7    2    3    4
0.0000    1.6667
0.5833    1.6667
5.5833    0.7500
10.3160   0.7500
15.0486   0.7500
20.0486   1.6667
20.6319   1.6667
* code 1203 - profile 4
    7    2    3    4
0.0000    1.6667
0.5833    1.6667
5.5833    0.7500
7.9167    0.7500
10.2500   0.7500
15.2500   1.6667
15.8333   1.6667
* code 1203 - profile 5
    4    2    3
0.0000    1.6667
0.5833    1.6667
3.4167    1.2083
6.2500    0.7500
* code 1203 - profile 6
    7    2    3    4
```

```
0.0000    1.4583
0.5833    1.4583
1.5833    0.4583
8.4583    0.4583
15.3333   0.4583
16.3333   1.4583
16.9167   1.4583
* code 1203 - profile 7
    7    2    3    4
0.0000    1.4583
0.5833    1.4583
1.5833    0.4583
7.9167    0.4583
14.2500   0.4583
15.2500   1.4583
15.8333   1.4583
* code 1203 - profile 8
    5    2    3
0.0000    1.1667
0.8334    1.1667
3.7709    1.1667
6.7084    1.1667
7.9375    1.1667
* code 1204 - assembling boxgirder
    1    2    1
    2    4    2
    4    6    2
    6    8    3
    8   10    4
   10   12    5
    3    5    6
    5    7    6
    9   11    7
    2    3    8
    4    5    8
    6    7    8
    8    9    8
   10   11    8
* code 1205 control code
    1    2   13    1    1    0    4    4     1.0       1.0
* code 1206 wheels/axle
       0.0
       1.5
       6.0
       7.5 0.833
* code 1207 definition axles
0.00      22.50
14.00     22.50
23.00     22.50
37.00     22.50
* code 1208 - accuracy
0.00001   0.00001   0.00001   .00001    .00001
* code 1209 number sections
   50
   1A   1B   1R   2L   2A   2B   2C   2R   3L   3A   3B   3C   3R
   4L   4A   4B   4C   4R   5L   5A   5B   5C   5R   6L   6A   6B
   7A   7B   7C   8A   8B   8C   9A   9B   9C  10L  10A  10B  11L  11A
  11B  12L  12A  12B  13L  13A  13B  14L  14A  14B
* code 1210 - density conrete
0.156
* code 1211 - extra forces selfweight

* code 1212 - surcharge
2.1835
* code 1213 - Prestressing Layout - NONE
```

IV_A_R3_EL.txt 9/11/2009

```
* start ; column 11-30 can be used to have your own text on the top of each page
*   5   10   15   20   25   30   35   40   45   50   55   60   65   70   75   80
*   V    V    V    V    V    V    V    V    V    V    V    V    V    V    V    V
00001  1 1     VEH: R3 - TOLL ROAD LOADING No. 3
* code 1001
Cline Avenue - Load Rating - Double Box  AND SINGLE BOX  - 87.34' WIDE
* code 1002
    2         1
* code 1003
*   5   10   15   20   25   30   35   40   45   50   55   60   65   70   75   80
*   V    V    V    V    V    V    V    V    V    V    V    V    V    V    V    V
250.0      183.0        87.34       1.0       1.0       1.3
* code 1004
    2    0    2
* code 1005
  126
* code 1005a
* location traffic lanes
7.667     19.667
* maximum and minimum truck
6.667      80.673   10.000
* code 1007, linear loads
0.7350    0.441
86.605    0.441
* code 1201
   12    8    6    3    5
* code 1202 coordinates
0.0000    0.0
10.7917   0.0
10.7917   -7.938
27.7083   0.0
27.7083   -7.938
44.6250   0.0
44.6250   -7.938
65.2569   0.0
65.2569   -7.938
81.0903   0.0
81.0903   -7.938
87.3403   0.0
* code 1203 - profile 1
    5    3    4
0.0000    0.7500
5.2083    0.7500
7.7083    1.2083
10.2083   1.6667
10.7917   1.6667
* code 1203 - profile 2
    7    2    3    4
0.0000    1.6667
0.5833    1.6667
5.5833    0.7500
8.4583    0.7500
11.3333   0.7500
16.3333   1.6667
16.9167   1.6667
* code 1203 - profile 3
    7    2    3    4
0.0000    1.6667
0.5833    1.6667
5.5833    0.7500
10.3160   0.7500
15.0486   0.7500
20.0486   1.6667
20.6319   1.6667
* code 1203 - profile 4
    7    2    3    4
0.0000    1.6667
0.5833    1.6667
5.5833    0.7500
7.9167    0.7500
10.2500   0.7500
15.2500   1.6667
15.8333   1.6667
* code 1203 - profile 5
    4    2    3
0.0000    1.6667
0.5833    1.6667
3.4167    1.2083
6.2500    0.7500
* code 1203 - profile 6
    7    2    3    4
```

```
0.0000    1.4583
0.5833    1.4583
1.5833    0.4583
8.4583    0.4583
15.3333   0.4583
16.3333   1.4583
16.9167   1.4583
* code 1203 - profile 7
    7    2    3    4
0.0000    1.4583
0.5833    1.4583
1.5833    0.4583
7.9167    0.4583
14.2500   0.4583
15.2500   1.4583
15.8333   1.4583
* code 1203 - profile 8
    5    2    3
0.0000    1.1667
0.8334    1.1667
3.7709    1.1667
6.7084    1.1667
7.9375    1.1667
* code 1204 - assembling boxgirder
    1    2    1
    2    4    2
    4    6    2
    6    8    3
    8   10    4
   10   12    5
    3    5    6
    5    7    6
    9   11    7
    2    3    8
    4    5    8
    6    7    8
    8    9    8
   10   11    8
* code 1205 control code
    1    2   13    1    1    0    4    7     1.0       1.0
* code 1206 wheels/axle
       0.0
       1.5
       6.0
       7.5 0.833
* code 1207 definition axles
0.00      18.00
10.00     18.00
14.00     18.00
40.00     18.00
44.00     18.00
56.00     18.00
76.00     18.00
* code 1208 - accuracy
0.00001   0.00001   0.00001   .00001    .00001
* code 1209 number sections
   50
   1A   1B   1R   2L   2A   2B   2C   2R   3L   3A   3B   3C   3R
   4L   4A   4B   4C   4R   5L   5A   5B   5C   5R   6L   6A   6B
   7A   7B   7C   8A   8B   8C   9A   9B   9C  10L  10A  10B  11L  11A
  11B  12L  12A  12B  13L  13A  13B  14L  14A  14B
* code 1210 - density conrete
0.156
* code 1211 - extra forces selfweight

* code 1212 - surcharge
2.1835
* code 1213 - Prestressing Layout - NONE
```

IV_A_R4_EL.txt 9/11/2009

```
* start ; column 11-30 can be used to have your own text on the top of each page
00001  1 1     VEH: R4 - MICHIGAN TRUCK TRAIN No.5
* code 1001
Cline Avenue - Load Rating - Double Box  AND SINGLE BOX  - 87.34' WIDE
* code 1002
    2         1
* code 1003
*   5   10   15   20   25   30   35   40   45   50   55   60   65   70   75   80
*   V    V    V    V    V    V    V    V    V    V    V    V    V    V    V    V
250.0      183.0        87.34       1.0       1.0       1.3
* code 1004
    2    0    2
* code 1005
  134
* code 1005a
* location traffic lanes
7.667     19.667
* maximum and minimum truck
6.667      80.673   10.000
* code 1007, linear loads
0.7350    0.441
86.605    0.441
* code 1201
   12    8    6    3    5
* code 1202 coordinates
0.0000    0.0
10.7917   0.0
10.7917   -7.938
27.7083   0.0
27.7083   -7.938
44.6250   0.0
44.6250   -7.938
65.2569   0.0
65.2569   -7.938
81.0903   0.0
81.0903   -7.938
87.3403   0.0
* code 1203 - profile 1
    5    3    4
0.0000    0.7500
5.2083    0.7500
7.7083    1.2083
10.2083   1.6667
10.7917   1.6667
* code 1203 - profile 2
    7    2    3    4
0.0000    1.6667
0.5833    1.6667
5.5833    0.7500
8.4583    0.7500
11.3333   0.7500
16.3333   1.6667
16.9167   1.6667
* code 1203 - profile 3
    7    2    3    4
0.0000    1.6667
0.5833    1.6667
5.5833    0.7500
10.3160   0.7500
15.0486   0.7500
20.0486   1.6667
20.6319   1.6667
* code 1203 - profile 4
    7    2    3    4
0.0000    1.6667
0.5833    1.6667
5.5833    0.7500
7.9167    0.7500
10.2500   0.7500
15.2500   1.6667
15.8333   1.6667
* code 1203 - profile 5
    4    2    3
0.0000    1.6667
0.5833    1.6667
3.4167    1.2083
6.2500    0.7500
* code 1203 - profile 6
    7    2    3    4
0.0000    1.4583
0.5833    1.4583
```

```
1.5833    0.4583
8.4583    0.4583
15.3333   0.4583
16.3333   1.4583
16.9167   1.4583
* code 1203 - profile 7
    7    2    3    4
0.0000    1.4583
0.5833    1.4583
1.5833    0.4583
7.9167    0.4583
14.2500   0.4583
15.2500   1.4583
15.8333   1.4583
* code 1203 - profile 8
    5    2    3
0.0000    1.1667
0.8334    1.1667
3.7709    1.1667
6.7084    1.1667
7.9375    1.1667
* code 1204 - assembling boxgirder
    1    2    1
    2    4    2
    4    6    2
    6    8    3
    8   10    4
   10   12    5
    3    5    6
    5    7    6
    9   11    7
    2    3    8
    4    5    8
    6    7    8
    8    9    8
   10   11    8
* code 1205 control code
    1    2   13    1    1    0    4    8     1.0       1.0
* code 1206 wheels/axle
       0.0
       1.5
       6.0
       7.5 0.833
* code 1207 definition axles
0.00      12.00
9.00      16.00
12.50     16.00
21.50     18.00
30.50     18.00
39.50     18.00
48.50     18.00
57.50     18.00
* code 1208 - accuracy
0.00001   0.00001   0.00001   .00001    .00001
* code 1209 number sections
   50
   1A   1B   1R   2L   2A   2B   2C   2R   3L   3A   3B   3C   3R
   4L   4A   4B   4C   4R   5L   5A   5B   5C   5R   6L   6A   6B
   7A   7B   7C   8A   8B   8C   9A   9B   9C  10L  10A  10B  11L  11A
  11B  12L  12A  12B  13L  13A  13B  14L  14A  14B
* code 1210 - density conrete
0.156
* code 1211 - extra forces selfweight

* code 1212 - surcharge
2.1835
* code 1213 - Prestressing Layout - NONE
•
```

IV_A_R5_EL.txt 9/11/2009

```
* start ; column 11-30 can be used to have your own text on the top of each page
00001  1 1     VEH: R5 - MICHIGAN TRUCK TRAIN No. 8
* code 1001
Cline Avenue - Load Rating - Double Box  AND SINGLE BOX  - 87.34' WIDE
* code 1002
    2         1
* code 1003
*   5   10   15   20   25   30   35   40   45   50   55   60   65   70   75   80
*   V    V    V    V    V    V    V    V    V    V    V    V    V    V    V    V
250.0      183.0        87.34       1.0       1.0       1.3
* code 1004
    2    0    2
* code 1005
* Vehicle weight is 134.2 Kips, rounded to 135
  135
* code 1005a
* location traffic lanes
7.667     19.667
* maximum and minimum truck
6.667      80.673   10.000
* code 1007, linear loads
0.7350    0.441
86.605    0.441
* code 1201
   12    8    6    3    5
* code 1202 coordinates
0.0000    0.0
10.7917   0.0
10.7917   -7.938
27.7083   0.0
27.7083   -7.938
44.6250   0.0
44.6250   -7.938
65.2569   0.0
65.2569   -7.938
81.0903   0.0
81.0903   -7.938
87.3403   0.0
* code 1203 - profile 1
    5    3    4
0.0000    0.7500
5.2083    0.7500
7.7083    1.2083
10.2083   1.6667
10.7917   1.6667
* code 1203 - profile 2
    7    2    3    4
0.0000    1.6667
0.5833    1.6667
5.5833    0.7500
8.4583    0.7500
11.3333   0.7500
16.3333   1.6667
16.9167   1.6667
* code 1203 - profile 3
    7    2    3    4
0.0000    1.6667
0.5833    1.6667
5.5833    0.7500
10.3160   0.7500
15.0486   0.7500
20.0486   1.6667
20.6319   1.6667
* code 1203 - profile 4
    7    2    3    4
0.0000    1.6667
0.5833    1.6667
5.5833    0.7500
7.9167    0.7500
10.2500   0.7500
15.2500   1.6667
15.8333   1.6667
* code 1203 - profile 5
    4    2    3
0.0000    1.6667
0.5833    1.6667
3.4167    1.2083
6.2500    0.7500
* code 1203 - profile 6
    7    2    3    4
0.0000    1.4583
```

```
0.5833    1.4583
1.5833    0.4583
8.4583    0.4583
15.3333   0.4583
16.3333   1.4583
16.9167   1.4583
* code 1203 - profile 7
    7    2    3    4
0.0000    1.4583
0.5833    1.4583
1.5833    0.4583
7.9167    0.4583
14.2500   0.4583
15.2500   1.4583
15.8333   1.4583
* code 1203 - profile 8
    5    2    3
0.0000    1.1667
0.8334    1.1667
3.7709    1.1667
6.7084    1.1667
7.9375    1.1667
* code 1204 - assembling boxgirder
    1    2    1
    2    4    2
    4    6    2
    6    8    3
    8   10    4
   10   12    5
    3    5    6
    5    7    6
    9   11    7
    2    3    8
    4    5    8
    6    7    8
    8    9    8
   10   11    8
* code 1205 control code
    1    2   13    1    1    0    4   11     1.0       1.0
* code 1206 wheels/axle
       0.0
       1.5
       6.0
       7.5 0.833
* code 1207 definition axles
0.00      12.00
9.00      13.40
12.50     13.40
21.50     10.90
25.00     10.90
28.50     10.90
32.00     10.90
35.50     10.90
39.00     10.90
48.00     15.00
57.00     15.00
* code 1208 - accuracy
0.00001   0.00001   0.00001   .00001    .00001
* code 1209 number sections
   50
   1A   1B   1R   2L   2A   2B   2C   2R   3L   3A   3B   3C   3R
   4L   4A   4B   4C   4R   5L   5A   5B   5C   5R   6L   6A   6B
   7A   7B   7C   8A   8B   8C   9A   9B   9C  10L  10A  10B  11L  11A
  11B  12L  12A  12B  13L  13A  13B  14L  14A  14B
* code 1210 - density conrete
0.156
* code 1211 - extra forces selfweight

* code 1212 - surcharge
2.1835
* code 1213 - Prestressing Layout - NONE
```

```
* start ; column 11-30 can be used to have your own text on the top of each page
*   5   10   15   20   25   30   35   40   45   50   55   60   65   70   75   80
*   V    V    V    V    V    V    V    V    V    V    V    V    V    V    V    V
00001  1 1     VEH: S1 - SPECIAL TRUCK 11 AXLE
* code 1001
Cline Avenue - Load Rating - Double Box  AND SINGLE BOX  - 87.34' WIDE
* code 1002
    2         1
* code 1003
*   5   10   15   20   25   30   35   40   45   50   55   60   65   70   75   80
*   V    V    V    V    V    V    V    V    V    V    V    V    V    V    V    V
250.0      183.0        87.34       1.0       1.0       1.3
* code 1004
    2    0    2
* code 1005
  258
* code 1005a
* location traffic lanes
7.667     19.667
* maximum and minimum truck
6.667      80.673   10.000
* code 1007, linear loads
0.7350    0.441
86.605    0.441
* code 1201
   12    8    6    3    5
* code 1202 coordinates
0.0000    0.0
10.7917   0.0
10.7917   -7.938
27.7083   0.0
27.7083   -7.938
44.6250   0.0
44.6250   -7.938
65.2569   0.0
65.2569   -7.938
81.0903   0.0
81.0903   -7.938
87.3403   0.0
* code 1203 - profile 1
    5    3    4
0.0000    0.7500
5.2083    0.7500
7.7083    1.2083
10.2083   1.6667
10.7917   1.6667
* code 1203 - profile 2
    7    2    3    4
0.0000    1.6667
0.5833    1.6667
5.5833    0.7500
8.4583    0.7500
11.3333   0.7500
16.3333   1.6667
16.9167   1.6667
* code 1203 - profile 3
    7    2    3    4
0.0000    1.6667
0.5833    1.6667
5.5833    0.7500
10.3160   0.7500
15.0486   0.7500
20.0486   1.6667
20.6319   1.6667
* code 1203 - profile 4
    7    2    3    4
0.0000    1.6667
0.5833    1.6667
5.5833    0.7500
7.9167    0.7500
10.2500   0.7500
15.2500   1.6667
15.8333   1.6667
* code 1203 - profile 5
    4    2    3
0.0000    1.6667
0.5833    1.6667
3.4167    1.2083
6.2500    0.7500
* code 1203 - profile 6
    7    2    3    4
```

```
0.0000    1.4583
0.5833    1.4583
1.5833    0.4583
8.4583    0.4583
15.3333   0.4583
16.3333   1.4583
16.9167   1.4583
* code 1203 - profile 7
    7    2    3    4
0.0000    1.4583
0.5833    1.4583
1.5833    0.4583
7.9167    0.4583
14.2500   0.4583
15.2500   1.4583
15.8333   1.4583
* code 1203 - profile 8
    5    2    3
0.0000    1.1667
0.8334    1.1667
3.7709    1.1667
6.7084    1.1667
7.9375    1.1667
* code 1204 - assembling boxgirder
    1    2    1
    2    4    2
    4    6    2
    6    8    3
    8   10    4
   10   12    5
    3    5    6
    5    7    6
    9   11    7
    2    3    8
    4    5    8
    6    7    8
    8    9    8
   10   11    8
* code 1205 control code
    1    2   13    1    1    0    4   11     1.0       1.0
* code 1206 wheels/axle
       0.0
       1.5
       6.0
       7.5 0.833
* code 1207 definition axles
0.00      12.00
11.50     24.60
16.67     24.60
21.67     24.60
34.83     24.60
39.33     24.60
89.92     24.60
94.42     24.60
98.92     24.60
112.50     24.60
117.00     24.60
* code 1208 - accuracy
0.00001   0.00001   0.00001   .00001    .00001
* code 1209 number sections
   50
   1A   1B   1R   2L   2A   2B   2C   2R   3L   3A   3B   3C   3R
   4L   4A   4B   4C   4R   5L   5A   5B   5C   5R   6L   6A   6B
   7A   7B   7C   8A   8B   8C   9A   9B   9C  10L  10A  10B  11L  11A
  11B  12L  12A  12B  13L  13A  13B  14L  14A  14B
* code 1210 - density conrete
0.156
* code 1211 - extra forces selfweight

* code 1212 - surcharge
2.1835
* code 1213 - Prestressing Layout - NONE
```

IV_A_S2_EL.txt 9/11/2009

```
* start ; column 11-30 can be used to have your own text on the top of each page
*   5   10   15   20   25   30   35   40   45   50   55   60   65   70   75   80
*   V    V    V    V    V    V    V    V    V    V    V    V    V    V    V    V
00001  1 1     VEH: S2 - SPECIAL TRUCK - 13 AXLE
* code 1001
Cline Avenue - Load Rating - Double Box  AND SINGLE BOX  - 87.34' WIDE
* code 1002
    2         1
* code 1003
*   5   10   15   20   25   30   35   40   45   50   55   60   65   70   75   80
*   V    V    V    V    V    V    V    V    V    V    V    V    V    V    V    V
250.0      183.0        87.34       1.0       1.0       1.3
* code 1004
    2    0    2
* code 1005
  267
* code 1005a
* location traffic lanes
7.667     19.667
* maximum and minimum truck
6.667      80.673   10.000
* code 1007, linear loads
0.7350    0.441
86.605    0.441
* code 1201
   12    8    6    3    5
* code 1202 coordinates
0.0000    0.0
10.7917   0.0
10.7917   -7.938
27.7083   0.0
27.7083   -7.938
44.6250   0.0
44.6250   -7.938
65.2569   0.0
65.2569   -7.938
81.0903   0.0
81.0903   -7.938
87.3403   0.0
* code 1203 - profile 1
    5    3    4
0.0000    0.7500
5.2083    0.7500
7.7083    1.2083
10.2083   1.6667
10.7917   1.6667
* code 1203 - profile 2
    7    2    3    4
0.0000    1.6667
0.5833    1.6667
5.5833    0.7500
8.4583    0.7500
11.3333   0.7500
16.3333   1.6667
16.9167   1.6667
* code 1203 - profile 3
    7    2    3    4
0.0000    1.6667
0.5833    1.6667
5.5833    0.7500
10.3160   0.7500
15.0486   0.7500
20.0486   1.6667
20.6319   1.6667
* code 1203 - profile 4
    7    2    3    4
0.0000    1.6667
0.5833    1.6667
5.5833    0.7500
7.9167    0.7500
10.2500   0.7500
15.2500   1.6667
15.8333   1.6667
* code 1203 - profile 5
    4    2    3
0.0000    1.6667
0.5833    1.6667
3.4167    1.2083
6.2500    0.7500
* code 1203 - profile 6
    7    2    3    4
```

```
0.0000    1.4583
0.5833    1.4583
1.5833    0.4583
8.4583    0.4583
15.3333   0.4583
16.3333   1.4583
16.9167   1.4583
* code 1203 - profile 7
    7    2    3    4
0.0000    1.4583
0.5833    1.4583
1.5833    0.4583
7.9167    0.4583
14.2500   0.4583
15.2500   1.4583
15.8333   1.4583
* code 1203 - profile 8
    5    2    3
0.0000    1.1667
0.8334    1.1667
3.7709    1.1667
6.7084    1.1667
7.9375    1.1667
* code 1204 - assembling boxgirder
    1    2    1
    2    4    2
    4    6    2
    6    8    3
    8   10    4
   10   12    5
    3    5    6
    5    7    6
    9   11    7
    2    3    8
    4    5    8
    6    7    8
    8    9    8
   10   11    8
* code 1205 control code
    1    2   13    1    1    0    4   13     1.0       1.0
* code 1206 wheels/axle
       0.0
       1.5
       6.0
       7.5 0.833
* code 1207 definition axles
0.00      15.00
16.50     21.00
21.00     21.00
25.50     21.00
39.50     21.00
44.00     21.00
48.50     21.00
96.50     21.00
101.00    21.00
105.50    21.00
121.00    21.00
125.50    21.00
130.00    21.00
* code 1208 - accuracy
0.00001   0.00001   0.00001   .00001    .00001
* code 1209 number sections
   50
   1A   1B   1R   2L   2A   2B   2C   2R   3L   3A   3B   3C   3R
   4L   4A   4B   4C   4R   5L   5A   5B   5C   5R   6L   6A   6B
   7A   7B   7C   8A   8B   8C   9A   9B   9C  10L  10A  10B  11L  11A
  11B  12L  12A  12B  13L  13A  13B  14L  14A  14B
* code 1210 - density conrete
0.156
* code 1211 - extra forces selfweight

* code 1212 - surcharge
2.1835
* code 1213 - Prestressing Layout - NONE
```

IV_A_S3_EL.txt 9/11/2009

```
* start ; column 11-30 can be used to have your own text on the top of each page
*   5   10   15   20   25   30   35   40   45   50   55   60   65   70   75   80
*   V    V    V    V    V    V    V    V    V    V    V    V    V    V    V    V
00001  1 1     VEH: S3 - SPECIAL TRUCK - 14 AXLE
* code 1001
Cline Avenue - Load Rating - Double Box  AND SINGLE BOX  - 87.34' WIDE
* code 1002
    2         1
* code 1003
*   5   10   15   20   25   30   35   40   45   50   55   60   65   70   75   80
*   V    V    V    V    V    V    V    V    V    V    V    V    V    V    V    V
250.0      183.0        87.34       1.0       1.0       1.3
* code 1004
    2    0    2
* code 1005
  350
* code 1005a
* location traffic lanes
7.667     19.667
* maximum and minimum truck
6.667      80.673   10.000
* code 1007, linear loads
0.7350    0.441
86.605    0.441
* code 1201
   12    8    6    3    5
* code 1202 coordinates
0.0000    0.0
10.7917   0.0
10.7917   -7.938
27.7083   0.0
27.7083   -7.938
44.6250   0.0
44.6250   -7.938
65.2569   0.0
65.2569   -7.938
81.0903   0.0
81.0903   -7.938
87.3403   0.0
* code 1203 - profile 1
    5    3    4
0.0000    0.7500
5.2083    0.7500
7.7083    1.2083
10.2083   1.6667
10.7917   1.6667
* code 1203 - profile 2
    7    2    3    4
0.0000    1.6667
0.5833    1.6667
5.5833    0.7500
8.4583    0.7500
11.3333   0.7500
16.3333   1.6667
16.9167   1.6667
* code 1203 - profile 3
    7    2    3    4
0.0000    1.6667
0.5833    1.6667
5.5833    0.7500
10.3160   0.7500
15.0486   0.7500
20.0486   1.6667
20.6319   1.6667
* code 1203 - profile 4
    7    2    3    4
0.0000    1.6667
0.5833    1.6667
5.5833    0.7500
7.9167    0.7500
10.2500   0.7500
15.2500   1.6667
15.8333   1.6667
* code 1203 - profile 5
    4    2    3
0.0000    1.6667
0.5833    1.6667
3.4167    1.2083
6.2500    0.7500
* code 1203 - profile 6
    7    2    3    4
```

```
0.0000    1.4583
0.5833    1.4583
1.5833    0.4583
8.4583    0.4583
15.3333   0.4583
16.3333   1.4583
16.9167   1.4583
* code 1203 - profile 7
    7    2    3    4
0.0000    1.4583
0.5833    1.4583
1.5833    0.4583
7.9167    0.4583
14.2500   0.4583
15.2500   1.4583
15.8333   1.4583
* code 1203 - profile 8
    5    2    3
0.0000    1.1667
0.8334    1.1667
3.7709    1.1667
6.7084    1.1667
7.9375    1.1667
* code 1204 - assembling boxgirder
    1    2    1
    2    4    2
    4    6    2
    6    8    3
    8   10    4
   10   12    5
    3    5    6
    5    7    6
    9   11    7
    2    3    8
    4    5    8
    6    7    8
    8    9    8
   10   11    8
* code 1205 control code
    1    2   13    1    1    0    4   14     1.0       1.0
* code 1206 wheels/axle
       0.0
       1.5
       6.0
       7.5 0.833
* code 1207 definition axles
0.00      13.00
14.50     25.00
19.00     25.00
23.50     25.00
50.50     23.50
54.67     23.50
58.83     23.50
102.83    23.50
107.33    28.00
111.83    28.00
116.33    28.00
132.17    28.00
136.67    28.00
141.17    28.00
* code 1208 - accuracy
0.00001   0.00001   0.00001   .00001    .00001
* code 1209 number sections
   50
   1A   1B   1R   2L   2A   2B   2C   2R   3L   3A   3B   3C   3R
   4L   4A   4B   4C   4R   5L   5A   5B   5C   5R   6L   6A   6B
   7A   7B   7C   8A   8B   8C   9A   9B   9C  10L  10A  10B  11L  11A
  11B  12L  12A  12B  13L  13A  13B  14L  14A  14B
* code 1210 - density conrete
0.156
* code 1211 - extra forces selfweight

* code 1212 - surcharge
2.1835
* code 1213 - Prestressing Layout - NONE
```

```
* start ; column 11-30 can be used to have your own text on the top of each page
*   5   10   15   20   25   30   35   40   45   50   55   60   65   70   75   80
*   V    V    V    V    V    V    V    V    V    V    V    V    V    V    V    V
00001  1 1     VEH: S4 - SUPER LOAD -19 AXLES
* code 1001
Cline Avenue - Load Rating - Double Box  AND SINGLE BOX  - 87.34' WIDE
* code 1002
    2         1
* code 1003
*   5   10   15   20   25   30   35   40   45   50   55   60   65   70   75   80
*   V    V    V    V    V    V    V    V    V    V    V    V    V    V    V    V
250.0      183.0        87.34       1.0       1.0       1.3
* code 1004
    2    0    2
* code 1005
  305
* code 1005a
* location traffic lanes
7.667     19.667
* maximum and minimum truck
6.667      80.673   10.000
* code 1007, linear loads
0.7350    0.441
86.605    0.441
* code 1201
   12    8    6    3    5
* code 1202 coordinates
0.0000    0.0
10.7917   0.0
10.7917   -7.938
27.7083   0.0
27.7083   -7.938
44.6250   0.0
44.6250   -7.938
65.2569   0.0
65.2569   -7.938
81.0903   0.0
81.0903   -7.938
87.3403   0.0
* code 1203 - profile 1
    5    3    4
0.0000    0.7500
5.2083    0.7500
7.7083    1.2083
10.2083   1.6667
10.7917   1.6667
* code 1203 - profile 2
    7    2    3    4
0.0000    1.6667
0.5833    1.6667
5.5833    0.7500
8.4583    0.7500
11.3333   0.7500
16.3333   1.6667
16.9167   1.6667
* code 1203 - profile 3
    7    2    3    4
0.0000    1.6667
0.5833    1.6667
5.5833    0.7500
10.3160   0.7500
15.0486   0.7500
20.0486   1.6667
20.6319   1.6667
* code 1203 - profile 4
    7    2    3    4
0.0000    1.6667
0.5833    1.6667
5.5833    0.7500
7.9167    0.7500
10.2500   0.7500
15.2500   1.6667
15.8333   1.6667
* code 1203 - profile 5
    4    2    3
0.0000    1.6667
0.5833    1.6667
3.4167    1.2083
6.2500    0.7500
* code 1203 - profile 6
    7    2    3    4
```

```
0.0000    1.4583
0.5833    1.4583
1.5833    0.4583
8.4583    0.4583
15.3333   0.4583
16.3333   1.4583
16.9167   1.4583
* code 1203 - profile 7
    7    2    3    4
0.0000    1.4583
0.5833    1.4583
1.5833    0.4583
7.9167    0.4583
14.2500   0.4583
15.2500   1.4583
15.8333   1.4583
* code 1203 - profile 8
    5    2    3
0.0000    1.1667
0.8334    1.1667
3.7709    1.1667
6.7084    1.1667
7.9375    1.1667
* code 1204 - assembling boxgirder
    1    2    1
    2    4    2
    4    6    2
    6    8    3
    8   10    4
   10   12    5
    3    5    6
    5    7    6
    9   11    7
    2    3    8
    4    5    8
    6    7    8
    8    9    8
   10   11    8
* code 1205 control code
    1    2   13    1    1    0    4   19     1.0       1.0
* code 1206 wheels/axle
       0.0
       1.5
       6.0
       7.5 0.833
* code 1207 definition axles
0.00      13.00
13.50     16.48
17.83     16.48
31.33     16.48
35.42     15.99
39.50     15.99
45.50     15.99
49.58     16.37
53.67     16.37
103.58    16.37
107.67    16.64
114.17    16.64
118.25    15.15
122.33    15.15
126.42    15.15
135.92    15.15
140.00    17.20
144.08    17.20
148.17    17.20
* code 1208 - accuracy
0.00001   0.00001   0.00001   .00001    .00001
* code 1209 number sections
   50
   1A   1B   1R   2L   2A   2B   2C   2R   3L   3A   3B   3C   3R
   4L   4A   4B   4C   4R   5L   5A   5B   5C   5R   6L   6A   6B
   7A   7B   7C   8A   8B   8C   9A   9B   9C  10L  10A  10B  11L  11A
  11B  12L  12A  12B  13L  13A  13B  14L  14A  14B
* code 1210 - density conrete
0.156
* code 1211 - extra forces selfweight

* code 1212 - surcharge
2.1835
* code 1213 - Prestressing Layout - NONE
```

```
* start ; column 11-30 can be used to have your own text on the top of each page
*   5   10   15   20   25   30   35   40   45   50   55   60   65   70   75   80
*   V    V    V    V    V    V    V    V    V    V    V    V    V    V    V    V
00001  1 1     VEH: S5 - SUPERLOAD - 19 AXLE
* code 1001
Cline Avenue - Load Rating - Double Box  AND SINGLE BOX  - 87.34' WIDE
* code 1002
    2         1
* code 1003
*   5   10   15   20   25   30   35   40   45   50   55   60   65   70   75   80
*   V    V    V    V    V    V    V    V    V    V    V    V    V    V    V    V
250.0      183.0        87.34       1.0       1.0       1.3
* code 1004
    2    0    2
* code 1005
  480
* code 1005a
* location traffic lanes
7.667     19.667
* maximum and minimum truck
6.667      80.673   10.000
* code 1007, linear loads
0.7350    0.441
86.605    0.441
* code 1201
   12    8    6    3    5
* code 1202 coordinates
0.0000    0.0
10.7917   0.0
10.7917   -7.938
27.7083   0.0
27.7083   -7.938
44.6250   0.0
44.6250   -7.938
65.2569   0.0
65.2569   -7.938
81.0903   0.0
81.0903   -7.938
87.3403   0.0
* code 1203 - profile 1
    5    3    4
0.0000    0.7500
5.2083    0.7500
7.7083    1.2083
10.2083   1.6667
10.7917   1.6667
* code 1203 - profile 2
    7    2    3    4
0.0000    1.6667
0.5833    1.6667
5.5833    0.7500
8.4583    0.7500
11.3333   0.7500
16.3333   1.6667
16.9167   1.6667
* code 1203 - profile 3
    7    2    3    4
0.0000    1.6667
0.5833    1.6667
5.5833    0.7500
10.3160   0.7500
15.0486   0.7500
20.0486   1.6667
20.6319   1.6667
* code 1203 - profile 4
    7    2    3    4
0.0000    1.6667
0.5833    1.6667
5.5833    0.7500
7.9167    0.7500
10.2500   0.7500
15.2500   1.6667
15.8333   1.6667
* code 1203 - profile 5
    4    2    3
0.0000    1.6667
0.5833    1.6667
3.4167    1.2083
6.2500    0.7500
* code 1203 - profile 6
    7    2    3    4
```

```
0.0000    1.4583
0.5833    1.4583
1.5833    0.4583
8.4583    0.4583
15.3333   0.4583
16.3333   1.4583
16.9167   1.4583
* code 1203 - profile 7
    7    2    3    4
0.0000    1.4583
0.5833    1.4583
1.5833    0.4583
7.9167    0.4583
14.2500   0.4583
15.2500   1.4583
15.8333   1.4583
* code 1203 - profile 8
    5    2    3
0.0000    1.1667
0.8334    1.1667
3.7709    1.1667
6.7084    1.1667
7.9375    1.1667
* code 1204 - assembling boxgirder
    1    2    1
    2    4    2
    4    6    2
    6    8    3
    8   10    4
   10   12    5
    3    5    6
    5    7    6
    9   11    7
    2    3    8
    4    5    8
    6    7    8
    8    9    8
   10   11    8
* code 1205 control code
    1    2   13    1    1    0    4   19     1.0       1.0
* code 1206 wheels/axle
       0.0
       1.5
       6.0
       7.5 0.833
* code 1207 definition axles
0.00      12.88
12.50     25.95
17.50     25.95
31.58     25.95
36.58     25.95
41.58     25.95
55.67     25.95
60.67     25.95
65.67     25.95
115.67    25.95
120.67    25.95
125.67    25.95
139.75    25.95
144.75    25.95
149.75    25.95
163.83    25.95
168.83    25.95
173.83    25.95
178.83    25.95
* code 1208 - accuracy
0.00001   0.00001   0.00001   .00001    .00001
* code 1209 number sections
   50
   1A   1B   1R   2L   2A   2B   2C   2R   3L   3A   3B   3C   3R
   4L   4A   4B   4C   4R   5L   5A   5B   5C   5R   6L   6A   6B
   7A   7B   7C   8A   8B   8C   9A   9B   9C  10L  10A  10B  11L  11A
  11B  12L  12A  12B  13L  13A  13B  14L  14A  14B
* code 1210 - density conrete
0.156
* code 1211 - extra forces selfweight

* code 1212 - surcharge
2.1835
* code 1213 - Prestressing Layout - NONE
```

4.8.3 Brug Output AASHTO Lanes (Summary)

1_IV_A_HL93_truck_EL.OUT 9/11/2009

VEH: HL93 TRUCK - S BRUG(5.75.44) page 61
date 11/09/2009; time 13:26:31
Cline Avenue - Load Rating - Double Box AND SINGLE BOX - 8

Summary of the results (Maximum)

Section	--- Deadload ----		----- P.T. ------		--- Live load ---	
	Moment	Ax.Frc	Moment	Ax.Frc	Moment	Ax.Frc
1 a	-7.11	0.93	0.00	0.00	1.00	0.20
1 b	-11.90	1.76	0.00	0.00	-0.01	0.01
1 right	-13.25	2.00	0.00	0.00	-0.01	0.01
2 left	-4.24	3.03	0.00	0.00	-0.11	0.00
2 a	-3.44	2.86	0.00	0.00	1.05	1.60
2 b	0.28	2.09	0.00	0.00	3.86	0.11
2 c	0.31	2.12	0.00	0.00	4.05	-0.33
2 right	-7.49	3.97	0.00	0.00	0.04	0.11
3 left	-7.66	3.95	0.00	0.00	0.96	0.54
3 a	-6.62	3.70	0.00	0.00	1.03	0.98
3 b	-0.89	2.27	0.00	0.00	3.62	0.03
3 c	0.31	1.93	0.00	0.00	4.18	-0.27
3 right	-4.13	2.68	0.00	0.00	0.61	1.60
4 left	-13.50	1.60	0.00	0.00	1.87	0.16
4 a	-12.07	1.33	0.00	0.00	2.29	1.01
4 b	-2.86	-0.27	0.00	0.00	4.05	0.18
4 c	1.82	-0.87	0.00	0.00	4.88	-0.16
4 right	-0.14	0.41	0.00	0.00	3.63	0.01
5 left	-3.67	-0.26	0.00	0.00	0.40	1.17
5 a	-2.87	-0.41	0.00	0.00	1.63	0.69
5 b	0.96	-1.01	0.00	0.00	4.01	-0.33
5 c	1.16	-0.93	0.00	0.00	4.06	-0.67
5 right	-5.04	0.83	0.00	0.00	0.03	0.01
6 left	-6.15	0.86	0.00	0.00	-0.01	0.01
6 a	-5.15	0.69	0.00	0.00	-0.01	0.01
6 b	-1.52	0.15	0.00	0.00	0.92	0.04
7 a	-0.50	-0.73	0.00	0.00	0.93	-1.29
7 b	-0.04	-0.31	0.00	0.00	0.77	-1.06
7 c	0.93	1.39	0.00	0.00	0.04	-0.12
8 a	-2.19	0.99	0.00	0.00	0.61	-0.31
8 b	-1.52	1.20	0.00	0.00	0.51	0.00
8 c	0.93	1.39	0.00	0.00	0.03	-0.30
9 a	-1.45	0.88	0.00	0.00	0.39	-0.58
9 b	-0.89	1.15	0.00	0.00	0.31	-0.46
9 c	0.77	1.74	0.00	0.00	0.02	-0.15
10 top	-9.01	-3.82	0.00	0.00	3.99	-1.67
10 a	-8.15	-3.33	0.00	0.00	3.41	-1.45
10 b	-5.13	-1.49	0.00	0.00	1.83	-0.72
11 top	0.16	-3.66	0.00	0.00	5.88	-1.83
11 a	0.14	-3.07	0.00	0.00	5.02	-1.61
11 b	0.06	-0.88	0.00	0.00	2.46	-0.85
12 top	9.36	-3.96	0.00	0.00	7.42	-3.35
12 a	8.46	-3.45	0.00	0.00	6.27	-2.90
12 b	5.28	-1.55	0.00	0.00	3.20	-0.80
13 top	3.52	-2.69	0.00	0.00	7.92	-1.45
13 a	2.95	-2.30	0.00	0.00	6.86	-1.25
13 b	0.96	-0.82	0.00	0.00	3.63	-0.56
14 top	1.11	-3.43	0.00	0.00	2.66	-6.67
14 a	1.13	-2.96	0.00	0.00	2.22	-5.66
14 b	1.21	-1.23	0.00	0.00	0.93	-2.57

1_IV_A_HL93_truck_EL.OUT 9/11/2009

VEH: HL93 TRUCK - S BRUG(5.75.44) page 62
date 11/09/2009; time 13:26:31
Cline Avenue - Load Rating - Double Box AND SINGLE BOX - 8

Summary of the results (Minimum)

Section	--- Deadload ----		----- P.T. ------		--- Live load ---	
	Moment	Ax.Frc	Moment	Ax.Frc	Moment	Ax.Frc
1 a	-7.11	0.93	0.00	0.00	-6.01	0.17
1 b	-11.90	1.76	0.00	0.00	-9.86	0.56
1 right	-13.25	2.00	0.00	0.00	-12.27	0.79
2 left	-4.24	3.03	0.00	0.00	-5.71	-0.05
2 a	-3.44	2.86	0.00	0.00	-5.03	-0.12
2 b	0.28	2.09	0.00	0.00	-0.19	1.02
2 c	0.31	2.12	0.00	0.00	-0.57	0.70
2 right	-7.49	3.97	0.00	0.00	-7.70	-0.23
3 left	-7.66	3.95	0.00	0.00	-7.27	-0.04
3 a	-6.62	3.70	0.00	0.00	-6.48	-0.10
3 b	-0.89	2.27	0.00	0.00	-1.30	-0.26
3 c	0.31	1.93	0.00	0.00	-0.46	0.34
3 right	-4.13	2.68	0.00	0.00	-5.82	-0.12
4 left	-13.50	1.60	0.00	0.00	-8.82	0.33
4 a	-12.07	1.33	0.00	0.00	-7.60	0.23
4 b	-2.86	-0.27	0.00	0.00	-2.90	-0.25
4 c	1.82	-0.87	0.00	0.00	-0.23	-0.24
4 right	-0.14	0.41	0.00	0.00	-7.12	0.27
5 left	-3.67	-0.26	0.00	0.00	-5.58	-0.73
5 a	-2.87	-0.41	0.00	0.00	-4.69	-0.83
5 b	0.96	-1.01	0.00	0.00	-0.56	-0.67
5 c	1.16	-0.93	0.00	0.00	-0.40	0.21
5 right	-5.04	0.83	0.00	0.00	-6.23	-0.30
6 left	-6.15	0.86	0.00	0.00	-5.83	0.72
6 a	-5.15	0.69	0.00	0.00	-3.98	0.47
6 b	-1.52	0.15	0.00	0.00	-0.15	0.05
7 a	-0.50	-0.73	0.00	0.00	-0.37	0.18
7 b	-0.04	-0.31	0.00	0.00	-0.32	0.18
7 c	0.93	1.39	0.00	0.00	-0.04	0.72
8 a	-2.19	0.99	0.00	0.00	-0.48	0.56
8 b	-1.52	1.20	0.00	0.00	-0.42	0.54
8 c	0.93	1.39	0.00	0.00	-0.05	0.84
9 a	-1.45	0.88	0.00	0.00	-0.69	0.85
9 b	-0.89	1.15	0.00	0.00	-0.59	0.83
9 c	0.77	1.74	0.00	0.00	-0.06	1.01
10 top	-9.01	-3.82	0.00	0.00	-11.03	-6.53
10 a	-8.15	-3.33	0.00	0.00	-9.35	-5.57
10 b	-5.13	-1.49	0.00	0.00	-4.66	-2.59
11 top	0.16	-3.66	0.00	0.00	-6.64	-1.84
11 a	0.14	-3.07	0.00	0.00	-5.66	-1.61
11 b	0.06	-0.88	0.00	0.00	-2.68	-0.85
12 top	9.36	-3.96	0.00	0.00	-6.22	-1.50
12 a	8.46	-3.45	0.00	0.00	-5.38	-1.30
12 b	5.28	-1.55	0.00	0.00	-2.89	-0.61
13 top	3.52	-2.69	0.00	0.00	-5.30	-3.24
13 a	2.95	-2.30	0.00	0.00	-4.40	-2.80
13 b	0.96	-0.82	0.00	0.00	-2.15	-0.73
14 top	1.11	-3.43	0.00	0.00	-4.72	-1.91
14 a	1.13	-2.96	0.00	0.00	-4.05	-1.66
14 b	1.21	-1.23	0.00	0.00	-2.17	-0.83

VEH: HL93- TANDEM - BRUG(5.75.44) page 61
date 11/09/2009; time 13:26:30
Cline Avenue - Load Rating - Double Box AND SINGLE BOX - 8

Summary of the results (Maximum)

Section	--- Deadload ---- Moment	Ax.Frc	----- P.T. ------ Moment	Ax.Frc	--- Live load --- Moment	Ax.Frc
1 a	-7.11	0.93	0.00	0.00	0.64	0.29
1 b	-11.90	1.76	0.00	0.00	0.00	0.01
1 right	-13.25	2.00	0.00	0.00	-0.01	0.01
2 left	-4.24	3.03	0.00	0.00	-0.07	0.00
2 a	-3.44	2.86	0.00	0.00	-0.07	0.00
2 b	0.28	2.09	0.00	0.00	3.44	0.07
2 c	0.31	2.12	0.00	0.00	3.83	-0.34
2 right	-7.49	3.97	0.00	0.00	0.03	0.06
3 left	-7.66	3.95	0.00	0.00	0.81	0.33
3 a	-6.62	3.70	0.00	0.00	0.73	0.31
3 b	-0.89	2.27	0.00	0.00	3.27	0.03
3 c	0.31	1.93	0.00	0.00	3.92	-0.28
3 right	-4.13	2.68	0.00	0.00	-0.04	0.16
4 left	-13.50	1.60	0.00	0.00	1.26	0.10
4 a	-12.07	1.33	0.00	0.00	1.19	0.09
4 b	-2.86	-0.27	0.00	0.00	3.46	0.14
4 c	1.82	-0.87	0.00	0.00	4.69	-0.21
4 right	-0.14	0.41	0.00	0.00	2.23	0.00
5 left	-3.67	-0.26	0.00	0.00	-0.25	0.14
5 a	-2.87	-0.41	0.00	0.00	0.18	0.90
5 b	0.96	-1.01	0.00	0.00	3.59	-0.22
5 c	1.16	-0.93	0.00	0.00	3.77	-0.59
5 right	-5.04	0.83	0.00	0.00	0.02	0.01
6 left	-6.15	0.86	0.00	0.00	-0.01	0.01
6 a	-5.15	0.69	0.00	0.00	0.00	0.01
6 b	-1.52	0.15	0.00	0.00	0.58	0.09
7 a	-0.50	-0.73	0.00	0.00	0.76	-1.15
7 b	-0.04	-0.31	0.00	0.00	0.59	-0.89
7 c	0.93	1.39	0.00	0.00	0.03	0.00
8 a	-2.19	0.99	0.00	0.00	0.50	-0.34
8 b	-1.52	1.20	0.00	0.00	0.38	-0.31
8 c	0.93	1.39	0.00	0.00	0.02	-0.22
9 a	-1.45	0.88	0.00	0.00	0.38	-0.65
9 b	-0.89	1.15	0.00	0.00	0.27	-0.49
9 c	0.77	1.74	0.00	0.00	0.02	-0.13
10 top	-9.01	-3.82	0.00	0.00	4.50	-2.52
10 a	-8.15	-3.33	0.00	0.00	3.50	-1.73
10 b	-5.13	-1.49	0.00	0.00	1.75	-0.88
11 top	0.16	-3.66	0.00	0.00	5.89	-2.70
11 a	0.14	-3.07	0.00	0.00	4.94	-2.40
11 b	0.06	-0.88	0.00	0.00	2.17	-1.04
12 top	9.36	-3.96	0.00	0.00	7.36	-3.26
12 a	8.46	-3.45	0.00	0.00	6.19	-2.89
12 b	5.28	-1.55	0.00	0.00	2.92	-1.75
13 top	3.52	-2.69	0.00	0.00	7.03	-2.21
13 a	2.95	-2.30	0.00	0.00	5.83	-1.62
13 b	0.96	-0.82	0.00	0.00	2.97	-0.80
14 top	1.11	-3.43	0.00	0.00	2.18	-6.07
14 a	1.13	-2.96	0.00	0.00	1.82	-5.34
14 b	1.21	-1.23	0.00	0.00	0.76	-2.73

VEH: HL93- TANDEM - BRUG(5.75.44) page 62
date 11/09/2009; time 13:26:30
Cline Avenue - Load Rating - Double Box AND SINGLE BOX - 8

Summary of the results (Minimum)

Section	--- Deadload ---- Moment	Ax.Frc	----- P.T. ------ Moment	Ax.Frc	--- Live load --- Moment	Ax.Frc
1 a	-7.11	0.93	0.00	0.00	-6.36	0.21
1 b	-11.90	1.76	0.00	0.00	-10.85	0.64
1 right	-13.25	2.00	0.00	0.00	-13.04	0.83
2 left	-4.24	3.03	0.00	0.00	-6.91	0.13
2 a	-3.44	2.86	0.00	0.00	-6.05	-0.07
2 b	0.28	2.09	0.00	0.00	-0.49	0.89
2 c	0.31	2.12	0.00	0.00	-0.50	0.57
2 right	-7.49	3.97	0.00	0.00	-8.39	0.02
3 left	-7.66	3.95	0.00	0.00	-8.10	0.16
3 a	-6.62	3.70	0.00	0.00	-7.15	-0.05
3 b	-0.89	2.27	0.00	0.00	-1.12	-0.22
3 c	0.31	1.93	0.00	0.00	-0.38	0.26
3 right	-4.13	2.68	0.00	0.00	-6.96	0.14
4 left	-13.50	1.60	0.00	0.00	-10.18	0.25
4 a	-12.07	1.33	0.00	0.00	-9.20	0.16
4 b	-2.86	-0.27	0.00	0.00	-2.81	-0.26
4 c	1.82	-0.87	0.00	0.00	-0.19	-0.18
4 right	-0.14	0.41	0.00	0.00	-9.04	0.24
5 left	-3.67	-0.26	0.00	0.00	-6.54	-0.33
5 a	-2.87	-0.41	0.00	0.00	-5.78	-0.54
5 b	0.96	-1.01	0.00	0.00	-0.58	-0.57
5 c	1.16	-0.93	0.00	0.00	-0.35	0.18
5 right	-5.04	0.83	0.00	0.00	-6.98	-0.12
6 left	-6.15	0.86	0.00	0.00	-6.26	0.77
6 a	-5.15	0.69	0.00	0.00	-4.51	0.57
6 b	-1.52	0.15	0.00	0.00	-0.29	0.08
7 a	-0.50	-0.73	0.00	0.00	-0.27	0.11
7 b	-0.04	-0.31	0.00	0.00	-0.23	0.12
7 c	0.93	1.39	0.00	0.00	-0.03	0.70
8 a	-2.19	0.99	0.00	0.00	-0.36	0.49
8 b	-1.52	1.20	0.00	0.00	-0.31	0.48
8 c	0.93	1.39	0.00	0.00	-0.04	0.79
9 a	-1.45	0.88	0.00	0.00	-0.51	0.65
9 b	-0.89	1.15	0.00	0.00	-0.43	0.66
9 c	0.77	1.74	0.00	0.00	-0.05	1.04
10 top	-9.01	-3.82	0.00	0.00	-10.16	-6.25
10 a	-8.15	-3.33	0.00	0.00	-8.58	-5.51
10 b	-5.13	-1.49	0.00	0.00	-4.13	-2.87
11 top	0.16	-3.66	0.00	0.00	-6.41	-2.71
11 a	0.14	-3.07	0.00	0.00	-5.38	-2.41
11 b	0.06	-0.88	0.00	0.00	-2.32	-1.05
12 top	9.36	-3.96	0.00	0.00	-6.04	-2.44
12 a	8.46	-3.45	0.00	0.00	-5.12	-2.14
12 b	5.28	-1.55	0.00	0.00	-2.46	-0.83
13 top	3.52	-2.69	0.00	0.00	-5.90	-3.20
13 a	2.95	-2.30	0.00	0.00	-4.90	-2.83
13 b	0.96	-0.82	0.00	0.00	-2.24	-1.70
14 top	1.11	-3.43	0.00	0.00	-4.65	-2.12
14 a	1.13	-2.96	0.00	0.00	-3.93	-1.88
14 b	1.21	-1.23	0.00	0.00	-1.98	-0.98

1_IV_A_R1_EL.OUT 9/11/2009

VEH: R1 - TOLL ROAD BRUG(5.75.44) page 61
date 11/09/2009; time 13:26:31
Cline Avenue - Load Rating - Double Box AND SINGLE BOX - 8

Summary of the results (Maximum)

Section	--- Deadload ---- Moment	Ax.Frc	----- P.T. ------ Moment	Ax.Frc	--- Live load --- Moment	Ax.Frc
1 a	-7.11	0.93	0.00	0.00	0.37	0.27
1 b	-11.90	1.76	0.00	0.00	-0.01	0.01
1 right	-13.25	2.00	0.00	0.00	-0.01	0.02
2 left	-4.24	3.03	0.00	0.00	0.42	2.04
2 a	-3.44	2.86	0.00	0.00	1.38	1.70
2 b	0.28	2.09	0.00	0.00	3.52	0.16
2 c	0.31	2.12	0.00	0.00	3.48	-0.38
2 right	-7.49	3.97	0.00	0.00	0.52	1.18
3 left	-7.66	3.95	0.00	0.00	1.17	0.66
3 a	-6.62	3.70	0.00	0.00	1.35	1.07
3 b	-0.89	2.27	0.00	0.00	3.22	0.08
3 c	0.31	1.93	0.00	0.00	3.64	-0.31
3 right	-4.13	2.68	0.00	0.00	1.49	1.53
4 left	-13.50	1.60	0.00	0.00	2.60	1.12
4 a	-12.07	1.33	0.00	0.00	2.90	1.00
4 b	-2.86	-0.27	0.00	0.00	3.81	0.26
4 c	1.82	-0.87	0.00	0.00	4.24	-0.18
4 right	-0.14	0.41	0.00	0.00	4.73	0.71
5 left	-3.67	-0.26	0.00	0.00	1.24	0.99
5 a	-2.87	-0.41	0.00	0.00	1.93	0.63
5 b	0.96	-1.01	0.00	0.00	3.67	-0.36
5 c	1.16	-0.93	0.00	0.00	3.62	-0.80
5 right	-5.04	0.83	0.00	0.00	0.04	0.01
6 left	-6.15	0.86	0.00	0.00	-0.01	0.02
6 a	-5.15	0.69	0.00	0.00	-0.01	0.01
6 b	-1.52	0.15	0.00	0.00	0.33	0.06
7 a	-0.50	-0.73	0.00	0.00	1.10	-1.55
7 b	-0.04	-0.31	0.00	0.00	0.93	-1.30
7 c	0.93	1.39	0.00	0.00	0.05	-0.16
8 a	-2.19	0.99	0.00	0.00	0.74	-0.06
8 b	-1.52	1.20	0.00	0.00	0.63	0.01
8 c	0.93	1.39	0.00	0.00	0.04	-0.37
9 a	-1.45	0.88	0.00	0.00	0.46	-0.68
9 b	-0.89	1.15	0.00	0.00	0.37	-0.55
9 c	0.77	1.74	0.00	0.00	0.03	-0.19
10 top	-9.01	-3.82	0.00	0.00	4.51	-1.39
10 a	-8.15	-3.33	0.00	0.00	3.95	-1.23
10 b	-5.13	-1.49	0.00	0.00	2.22	-0.64
11 top	0.16	-3.66	0.00	0.00	6.80	-1.58
11 a	0.14	-3.07	0.00	0.00	5.90	-1.41
11 b	0.06	-0.88	0.00	0.00	2.99	-0.78
12 top	9.36	-3.96	0.00	0.00	8.35	-1.58
12 a	8.46	-3.45	0.00	0.00	7.32	-1.41
12 b	5.28	-1.55	0.00	0.00	3.90	-0.80
13 top	3.52	-2.69	0.00	0.00	9.27	-1.06
13 a	2.95	-2.30	0.00	0.00	8.14	-0.92
13 b	0.96	-0.82	0.00	0.00	4.42	-0.42
14 top	1.11	-3.43	0.00	0.00	3.07	-4.29
14 a	1.13	-2.96	0.00	0.00	2.62	-3.75
14 b	1.21	-1.23	0.00	0.00	1.13	-1.92

1_IV_A_R1_EL.OUT 9/11/2009

VEH: R1 - TOLL ROAD BRUG(5.75.44) page 62
date 11/09/2009; time 13:26:31
Cline Avenue - Load Rating - Double Box AND SINGLE BOX - 8

Summary of the results (Minimum)

Section	--- Deadload ---- Moment	Ax.Frc	----- P.T. ------ Moment	Ax.Frc	--- Live load --- Moment	Ax.Frc
1 a	-7.11	0.93	0.00	0.00	-6.33	0.26
1 b	-11.90	1.76	0.00	0.00	-10.93	0.59
1 right	-13.25	2.00	0.00	0.00	-12.86	0.72
2 left	-4.24	3.03	0.00	0.00	-5.29	-0.17
2 a	-3.44	2.86	0.00	0.00	-4.70	-0.21
2 b	0.28	2.09	0.00	0.00	-0.21	1.25
2 c	0.31	2.12	0.00	0.00	-0.70	0.86
2 right	-7.49	3.97	0.00	0.00	-7.75	-0.41
3 left	-7.66	3.95	0.00	0.00	-7.21	-0.16
3 a	-6.62	3.70	0.00	0.00	-6.47	-0.20
3 b	-0.89	2.27	0.00	0.00	-1.09	-0.16
3 c	0.31	1.93	0.00	0.00	-0.57	0.42
3 right	-4.13	2.68	0.00	0.00	-5.48	-0.28
4 left	-13.50	1.60	0.00	0.00	-9.30	-0.05
4 a	-12.07	1.33	0.00	0.00	-8.58	-0.09
4 b	-2.86	-0.27	0.00	0.00	-2.91	-0.33
4 c	1.82	-0.87	0.00	0.00	-0.29	-0.30
4 right	-0.14	0.41	0.00	0.00	-7.20	0.05
5 left	-3.67	-0.26	0.00	0.00	-5.36	-1.01
5 a	-2.87	-0.41	0.00	0.00	-4.72	-1.03
5 b	0.96	-1.01	0.00	0.00	-0.66	0.37
5 c	1.16	-0.93	0.00	0.00	-0.49	0.25
5 right	-5.04	0.83	0.00	0.00	-6.10	-0.44
6 left	-6.15	0.86	0.00	0.00	-4.92	0.50
6 a	-5.15	0.69	0.00	0.00	-3.62	0.36
6 b	-1.52	0.15	0.00	0.00	-0.12	0.05
7 a	-0.50	-0.73	0.00	0.00	-0.45	0.22
7 b	-0.04	-0.31	0.00	0.00	-0.39	0.23
7 c	0.93	1.39	0.00	0.00	-0.05	0.87
8 a	-2.19	0.99	0.00	0.00	-0.59	0.68
8 b	-1.52	1.20	0.00	0.00	-0.51	0.66
8 c	0.93	1.39	0.00	0.00	-0.06	1.02
9 a	-1.45	0.88	0.00	0.00	-0.84	1.03
9 b	-0.89	1.15	0.00	0.00	-0.72	1.00
9 c	0.77	1.74	0.00	0.00	-0.07	1.20
10 top	-9.01	-3.82	0.00	0.00	-12.54	-4.45
10 a	-8.15	-3.33	0.00	0.00	-10.89	-3.90
10 b	-5.13	-1.49	0.00	0.00	-5.65	-2.05
11 top	0.16	-3.66	0.00	0.00	-7.73	-1.60
11 a	0.14	-3.07	0.00	0.00	-6.68	-1.42
11 b	0.06	-0.88	0.00	0.00	-3.25	-0.79
12 top	9.36	-3.96	0.00	0.00	-7.21	-1.19
12 a	8.46	-3.45	0.00	0.00	-6.35	-1.04
12 b	5.28	-1.55	0.00	0.00	-3.51	-0.51
13 top	3.52	-2.69	0.00	0.00	-5.75	-2.45
13 a	2.95	-2.30	0.00	0.00	-4.95	-2.15
13 b	0.96	-0.82	0.00	0.00	-2.62	-0.72
14 top	1.11	-3.43	0.00	0.00	-5.38	-1.62
14 a	1.13	-2.96	0.00	0.00	-4.72	-1.43
14 b	1.21	-1.23	0.00	0.00	-2.63	-0.76

1_IV_A_R2_EL.OUT 9/11/2009

VEH: R2 - TOLL ROAD BRUG(5.75.44) page 61
date 11/09/2009; time 13:26:32
Cline Avenue - Load Rating - Double Box AND SINGLE BOX - 8

Summary of the results (Maximum)

Section	--- Deadload ---		----- P.T. ------		--- Live load ---	
	Moment	Ax.Frc	Moment	Ax.Frc	Moment	Ax.Frc
1 a	-7.11	0.93	0.00	0.00	0.69	0.18
1 b	-11.90	1.76	0.00	0.00	-0.01	0.02
1 right	-13.25	2.00	0.00	0.00	-0.01	0.02
2 left	-4.24	3.03	0.00	0.00	0.80	1.79
2 a	-3.44	2.86	0.00	0.00	1.93	1.45
2 b	0.28	2.09	0.00	0.00	3.45	0.15
2 c	0.31	2.12	0.00	0.00	3.38	-0.33
2 right	-7.49	3.97	0.00	0.00	0.79	1.07
3 left	-7.66	3.95	0.00	0.00	1.20	1.01
3 a	-6.62	3.70	0.00	0.00	1.66	0.86
3 b	-0.89	2.27	0.00	0.00	3.19	0.03
3 c	0.31	1.93	0.00	0.00	3.55	-0.29
3 right	-4.13	2.68	0.00	0.00	1.75	1.37
4 left	-13.50	1.60	0.00	0.00	2.81	1.01
4 a	-12.07	1.33	0.00	0.00	3.15	0.82
4 b	-2.86	-0.27	0.00	0.00	3.78	0.21
4 c	1.82	-0.87	0.00	0.00	4.09	-0.13
4 right	-0.14	0.41	0.00	0.00	4.88	0.65
5 left	-3.67	-0.26	0.00	0.00	1.48	0.85
5 a	-2.87	-0.41	0.00	0.00	2.32	0.43
5 b	0.96	-1.01	0.00	0.00	3.59	-0.39
5 c	1.16	-0.93	0.00	0.00	3.52	-0.72
5 right	-5.04	0.83	0.00	0.00	0.04	0.01
6 left	-6.15	0.86	0.00	0.00	-0.01	0.02
6 a	-5.15	0.69	0.00	0.00	-0.01	0.01
6 b	-1.52	0.15	0.00	0.00	0.65	0.03
7 a	-0.50	-0.73	0.00	0.00	1.01	-1.36
7 b	-0.04	-0.31	0.00	0.00	0.87	-1.16
7 c	0.93	1.39	0.00	0.00	0.04	-0.20
8 a	-2.19	0.99	0.00	0.00	0.69	-0.06
8 b	-1.52	1.20	0.00	0.00	0.59	0.01
8 c	0.93	1.39	0.00	0.00	0.03	-0.36
9 a	-1.45	0.88	0.00	0.00	0.39	-0.53
9 b	-0.89	1.15	0.00	0.00	0.32	-0.43
9 c	0.77	1.74	0.00	0.00	0.02	-0.16
10 top	-9.01	-3.82	0.00	0.00	3.72	-1.19
10 a	-8.15	-3.33	0.00	0.00	3.26	-1.04
10 b	-5.13	-1.49	0.00	0.00	1.84	-0.53
11 top	0.16	-3.66	0.00	0.00	5.92	-1.34
11 a	0.14	-3.07	0.00	0.00	5.15	-1.18
11 b	0.06	-0.88	0.00	0.00	2.61	-0.64
12 top	9.36	-3.96	0.00	0.00	7.39	-1.31
12 a	8.46	-3.45	0.00	0.00	6.49	-1.17
12 b	5.28	-1.55	0.00	0.00	3.47	-0.66
13 top	3.52	-2.69	0.00	0.00	8.41	-0.84
13 a	2.95	-2.30	0.00	0.00	7.39	-0.72
13 b	0.96	-0.82	0.00	0.00	4.02	-0.30
14 top	1.11	-3.43	0.00	0.00	2.79	-4.75
14 a	1.13	-2.96	0.00	0.00	2.36	-3.98
14 b	1.21	-1.23	0.00	0.00	1.01	-1.76

1_IV_A_R2_EL.OUT 9/11/2009

VEH: R2 - TOLL ROAD BRUG(5.75.44) page 62
date 11/09/2009; time 13:26:32
Cline Avenue - Load Rating - Double Box AND SINGLE BOX - 8

Summary of the results (Minimum)

Section	--- Deadload ---		----- P.T. ------		--- Live load ---	
	Moment	Ax.Frc	Moment	Ax.Frc	Moment	Ax.Frc
1 a	-7.11	0.93	0.00	0.00	-5.34	0.17
1 b	-11.90	1.76	0.00	0.00	-8.83	0.45
1 right	-13.25	2.00	0.00	0.00	-10.79	0.62
2 left	-4.24	3.03	0.00	0.00	-4.31	-0.15
2 a	-3.44	2.86	0.00	0.00	-3.83	-0.18
2 b	0.28	2.09	0.00	0.00	-0.07	0.02
2 c	0.31	2.12	0.00	0.00	-0.59	0.76
2 right	-7.49	3.97	0.00	0.00	-6.55	-0.38
3 left	-7.66	3.95	0.00	0.00	-6.04	-0.18
3 a	-6.62	3.70	0.00	0.00	-5.43	-0.21
3 b	-0.89	2.27	0.00	0.00	-1.01	-0.15
3 c	0.31	1.93	0.00	0.00	-0.50	0.36
3 right	-4.13	2.68	0.00	0.00	-4.46	-0.30
4 left	-13.50	1.60	0.00	0.00	-7.92	-0.05
4 a	-12.07	1.33	0.00	0.00	-7.31	-0.08
4 b	-2.86	-0.27	0.00	0.00	-2.73	-0.28
4 c	1.82	-0.87	0.00	0.00	-0.25	-0.27
4 right	-0.14	0.41	0.00	0.00	-5.84	0.03
5 left	-3.67	-0.26	0.00	0.00	-4.34	-0.95
5 a	-2.87	-0.41	0.00	0.00	-3.82	-0.96
5 b	0.96	-1.01	0.00	0.00	-0.53	0.30
5 c	1.16	-0.93	0.00	0.00	-0.41	0.21
5 right	-5.04	0.83	0.00	0.00	-5.13	-0.38
6 left	-6.15	0.86	0.00	0.00	-4.41	0.49
6 a	-5.15	0.69	0.00	0.00	-3.06	0.31
6 b	-1.52	0.15	0.00	0.00	-0.08	0.04
7 a	-0.50	-0.73	0.00	0.00	-0.43	0.21
7 b	-0.04	-0.31	0.00	0.00	-0.37	0.22
7 c	0.93	1.39	0.00	0.00	-0.04	0.73
8 a	-2.19	0.99	0.00	0.00	-0.55	0.57
8 b	-1.52	1.20	0.00	0.00	-0.48	0.55
8 c	0.93	1.39	0.00	0.00	-0.05	0.88
9 a	-1.45	0.88	0.00	0.00	-0.78	0.96
9 b	-0.89	1.15	0.00	0.00	-0.67	0.93
9 c	0.77	1.74	0.00	0.00	-0.06	1.01
10 top	-9.01	-3.82	0.00	0.00	-10.95	-4.70
10 a	-8.15	-3.33	0.00	0.00	-9.47	-3.96
10 b	-5.13	-1.49	0.00	0.00	-4.91	-1.82
11 top	0.16	-3.66	0.00	0.00	-6.83	-1.35
11 a	0.14	-3.07	0.00	0.00	-5.91	-1.19
11 b	0.06	-0.88	0.00	0.00	-2.86	-0.64
12 top	9.36	-3.96	0.00	0.00	-6.43	-0.97
12 a	8.46	-3.45	0.00	0.00	-5.65	-0.84
12 b	5.28	-1.55	0.00	0.00	-3.14	-0.39
13 top	3.52	-2.69	0.00	0.00	-4.72	-1.19
13 a	2.95	-2.30	0.00	0.00	-4.13	-1.05
13 b	0.96	-0.82	0.00	0.00	-2.20	-0.58
14 top	1.11	-3.43	0.00	0.00	-4.56	-1.41
14 a	1.13	-2.96	0.00	0.00	-4.00	-1.24
14 b	1.21	-1.23	0.00	0.00	-2.24	-0.64

1_IV_A_R3_EL.OUT 9/11/2009

VEH: R3 - TOLL ROAD BRUG(5.75.44) page 61
date 11/09/2009; time 13:26:33
Cline Avenue - Load Rating - Double Box AND SINGLE BOX - 8

Summary of the results (Maximum)

Section	--- Deadload ---		----- P.T. ------		--- Live load ---	
	Moment	Ax.Frc	Moment	Ax.Frc	Moment	Ax.Frc
1 a	-7.11	0.93	0.00	0.00	0.49	0.14
1 b	-11.90	1.76	0.00	0.00	-0.01	0.03
1 right	-13.25	2.00	0.00	0.00	-0.01	0.04
2 left	-4.24	3.03	0.00	0.00	1.11	1.76
2 a	-3.44	2.86	0.00	0.00	2.08	1.47
2 b	0.28	2.09	0.00	0.00	3.46	0.17
2 c	0.31	2.12	0.00	0.00	3.15	-0.39
2 right	-7.49	3.97	0.00	0.00	0.76	0.79
3 left	-7.66	3.95	0.00	0.00	1.31	0.86
3 a	-6.62	3.70	0.00	0.00	1.80	0.72
3 b	-0.89	2.27	0.00	0.00	3.22	-0.17
3 c	0.31	1.93	0.00	0.00	3.38	-0.48
3 right	-4.13	2.68	0.00	0.00	1.87	1.12
4 left	-13.50	1.60	0.00	0.00	3.32	0.76
4 a	-12.07	1.33	0.00	0.00	3.68	0.63
4 b	-2.86	-0.27	0.00	0.00	3.94	0.06
4 c	1.82	-0.87	0.00	0.00	3.87	-0.15
4 right	-0.14	0.41	0.00	0.00	6.03	0.47
5 left	-3.67	-0.26	0.00	0.00	1.39	0.50
5 a	-2.87	-0.41	0.00	0.00	2.18	0.15
5 b	0.96	-1.01	0.00	0.00	3.63	-0.60
5 c	1.16	-0.93	0.00	0.00	3.38	-0.82
5 right	-5.04	0.83	0.00	0.00	0.06	0.02
6 left	-6.15	0.86	0.00	0.00	-0.01	0.02
6 a	-5.15	0.69	0.00	0.00	-0.01	0.02
6 b	-1.52	0.15	0.00	0.00	0.44	0.05
7 a	-0.50	-0.73	0.00	0.00	1.15	-1.41
7 b	-0.04	-0.31	0.00	0.00	0.97	-1.20
7 c	0.93	1.39	0.00	0.00	0.03	-0.30
8 a	-2.19	0.99	0.00	0.00	0.81	-0.12
8 b	-1.52	1.20	0.00	0.00	0.69	-0.03
8 c	0.93	1.39	0.00	0.00	0.03	-0.49
9 a	-1.45	0.88	0.00	0.00	0.37	-0.44
9 b	-0.89	1.15	0.00	0.00	0.29	-0.33
9 c	0.77	1.74	0.00	0.00	0.02	-0.17
10 top	-9.01	-3.82	0.00	0.00	3.58	-1.43
10 a	-8.15	-3.33	0.00	0.00	3.09	-1.26
10 b	-5.13	-1.49	0.00	0.00	1.68	-0.66
11 top	0.16	-3.66	0.00	0.00	6.25	-1.54
11 a	0.14	-3.07	0.00	0.00	5.37	-1.38
11 b	0.06	-0.88	0.00	0.00	2.65	-0.76
12 top	9.36	-3.96	0.00	0.00	8.08	-1.52
12 a	8.46	-3.45	0.00	0.00	7.04	-1.36
12 b	5.28	-1.55	0.00	0.00	3.72	-0.67
13 top	3.52	-2.69	0.00	0.00	9.64	-0.89
13 a	2.95	-2.30	0.00	0.00	8.42	-0.77
13 b	0.96	-0.82	0.00	0.00	4.51	-0.33
14 top	1.11	-3.43	0.00	0.00	2.83	-4.45
14 a	1.13	-2.96	0.00	0.00	2.40	-3.91
14 b	1.21	-1.23	0.00	0.00	1.00	-2.03

1_IV_A_R3_EL.OUT 9/11/2009

VEH: R3 - TOLL ROAD BRUG(5.75.44) page 62
date 11/09/2009; time 13:26:33
Cline Avenue - Load Rating - Double Box AND SINGLE BOX - 8

Summary of the results (Minimum)

Section	--- Deadload ---		----- P.T. ------		--- Live load ---	
	Moment	Ax.Frc	Moment	Ax.Frc	Moment	Ax.Frc
1 a	-7.11	0.93	0.00	0.00	-5.21	0.10
1 b	-11.90	1.76	0.00	0.00	-8.92	0.36
1 right	-13.25	2.00	0.00	0.00	-10.68	0.48
2 left	-4.24	3.03	0.00	0.00	-4.59	-0.13
2 a	-3.44	2.86	0.00	0.00	-4.10	-0.17
2 b	0.28	2.09	0.00	0.00	-0.76	-0.24
2 c	0.31	2.12	0.00	0.00	-0.51	0.74
2 right	-7.49	3.97	0.00	0.00	-6.93	-0.41
3 left	-7.66	3.95	0.00	0.00	-6.31	-0.30
3 a	-6.62	3.70	0.00	0.00	-5.70	-0.34
3 b	-0.89	2.27	0.00	0.00	-1.16	-0.28
3 c	0.31	1.93	0.00	0.00	-0.53	0.39
3 right	-4.13	2.68	0.00	0.00	-4.66	-0.48
4 left	-13.50	1.60	0.00	0.00	-8.48	-0.06
4 a	-12.07	1.33	0.00	0.00	-7.87	-0.14
4 b	-2.86	-0.27	0.00	0.00	-3.34	-0.28
4 c	1.82	-0.87	0.00	0.00	-0.25	-0.23
4 right	-0.14	0.41	0.00	0.00	-5.76	0.02
5 left	-3.67	-0.26	0.00	0.00	-4.29	-1.09
5 a	-2.87	-0.41	0.00	0.00	-3.79	-1.09
5 b	0.96	-1.01	0.00	0.00	-0.49	0.27
5 c	1.16	-0.93	0.00	0.00	-0.38	0.19
5 right	-5.04	0.83	0.00	0.00	-5.51	-0.35
6 left	-6.15	0.86	0.00	0.00	-4.66	0.46
6 a	-5.15	0.69	0.00	0.00	-3.36	0.33
6 b	-1.52	0.15	0.00	0.00	-0.13	0.05
7 a	-0.50	-0.73	0.00	0.00	-0.48	0.26
7 b	-0.04	-0.31	0.00	0.00	-0.42	0.27
7 c	0.93	1.39	0.00	0.00	-0.04	0.75
8 a	-2.19	0.99	0.00	0.00	-0.62	0.16
8 b	-1.52	1.20	0.00	0.00	-0.54	0.12
8 c	0.93	1.39	0.00	0.00	-0.05	0.95
9 a	-1.45	0.88	0.00	0.00	-0.86	1.11
9 b	-0.89	1.15	0.00	0.00	-0.74	1.06
9 c	0.77	1.74	0.00	0.00	-0.07	1.03
10 top	-9.01	-3.82	0.00	0.00	-11.36	-4.37
10 a	-8.15	-3.33	0.00	0.00	-9.77	-3.84
10 b	-5.13	-1.49	0.00	0.00	-4.90	-2.03
11 top	0.16	-3.66	0.00	0.00	-7.40	-1.55
11 a	0.14	-3.07	0.00	0.00	-6.34	-1.38
11 b	0.06	-0.88	0.00	0.00	-2.96	-0.76
12 top	9.36	-3.96	0.00	0.00	-7.29	-1.12
12 a	8.46	-3.45	0.00	0.00	-6.36	-0.98
12 b	5.28	-1.55	0.00	0.00	-3.44	-0.47
13 top	3.52	-2.69	0.00	0.00	-4.57	-1.37
13 a	2.95	-2.30	0.00	0.00	-3.94	-1.22
13 b	0.96	-0.82	0.00	0.00	-2.05	-0.57
14 top	1.11	-3.43	0.00	0.00	-4.51	-1.67
14 a	1.13	-2.96	0.00	0.00	-3.91	-1.48
14 b	1.21	-1.23	0.00	0.00	-2.15	-0.78

1_IV_A_R4_EL.OUT 9/11/2009

VEH: R4 - MICHIGAN T BRUG(5.75.44) page 61
date 11/09/2009; time 13:26:33
Cline Avenue - Load Rating - Double Box AND SINGLE BOX - 8

Summary of the results (Maximum)

Section	--- Deadload ---- Moment	Ax.Frc	----- P.T. ------ Moment	Ax.Frc	--- Live load --- Moment	Ax.Frc
1 a	-7.11	0.93	0.00	0.00	0.50	0.17
1 b	-11.90	1.76	0.00	0.00	0.23	0.29
1 right	-13.25	2.00	0.00	0.00	0.03	0.32
2 left	-4.24	3.03	0.00	0.00	2.70	1.91
2 a	-3.44	2.86	0.00	0.00	3.41	1.58
2 b	0.28	2.09	0.00	0.00	3.69	0.22
2 c	0.31	2.12	0.00	0.00	3.22	-0.39
2 right	-7.49	3.97	0.00	0.00	1.94	0.92
3 left	-7.66	3.95	0.00	0.00	2.55	0.86
3 a	-6.62	3.70	0.00	0.00	2.76	0.76
3 b	-0.89	2.27	0.00	0.00	3.34	-0.03
3 c	0.31	1.93	0.00	0.00	3.46	-0.41
3 right	-4.13	2.68	0.00	0.00	3.40	1.29
4 left	-13.50	1.60	0.00	0.00	4.84	0.85
4 a	-12.07	1.33	0.00	0.00	4.91	0.70
4 b	-2.86	-0.27	0.00	0.00	4.26	0.24
4 c	1.82	-0.87	0.00	0.00	3.90	-0.11
4 right	-0.14	0.41	0.00	0.00	7.84	0.41
5 left	-3.67	-0.26	0.00	0.00	2.96	0.39
5 a	-2.87	-0.41	0.00	0.00	3.56	0.07
5 b	0.96	-1.01	0.00	0.00	3.84	-0.60
5 c	1.16	-0.93	0.00	0.00	3.53	-0.92
5 right	-5.04	0.83	0.00	0.00	0.06	0.02
6 left	-6.15	0.86	0.00	0.00	0.06	0.34
6 a	-5.15	0.69	0.00	0.00	0.25	0.20
6 b	-1.52	0.15	0.00	0.00	0.47	0.02
7 a	-0.50	-0.73	0.00	0.00	1.33	-1.67
7 b	-0.04	-0.31	0.00	0.00	1.16	-1.48
7 c	0.93	1.39	0.00	0.00	0.05	-0.37
8 a	-2.19	0.99	0.00	0.00	0.94	-0.05
8 b	-1.52	1.20	0.00	0.00	0.82	0.03
8 c	0.93	1.39	0.00	0.00	0.04	-0.54
9 a	-1.45	0.88	0.00	0.00	0.44	-0.52
9 b	-0.89	1.15	0.00	0.00	0.38	-0.43
9 c	0.77	1.74	0.00	0.00	0.03	-0.21
10 top	-9.01	-3.82	0.00	0.00	3.95	-0.98
10 a	-8.15	-3.33	0.00	0.00	3.52	-0.86
10 b	-5.13	-1.49	0.00	0.00	2.09	-0.46
11 top	0.16	-3.66	0.00	0.00	7.09	-1.13
11 a	0.14	-3.07	0.00	0.00	6.21	-1.00
11 b	0.06	-0.88	0.00	0.00	3.22	-0.56
12 top	9.36	-3.96	0.00	0.00	9.22	-1.09
12 a	8.46	-3.45	0.00	0.00	8.15	-0.98
12 b	5.28	-1.55	0.00	0.00	4.43	-0.60
13 top	3.52	-2.69	0.00	0.00	10.59	-0.06
13 a	2.95	-2.30	0.00	0.00	9.35	-0.03
13 b	0.96	-0.82	0.00	0.00	5.30	-0.08
14 top	1.11	-3.43	0.00	0.00	3.50	-3.76
14 a	1.13	-2.96	0.00	0.00	2.99	-3.13
14 b	1.21	-1.23	0.00	0.00	1.29	-1.41

1_IV_A_R4_EL.OUT 9/11/2009

VEH: R4 - MICHIGAN T BRUG(5.75.44) page 62
date 11/09/2009; time 13:26:33
Cline Avenue - Load Rating - Double Box AND SINGLE BOX - 8

Summary of the results (Minimum)

Section	--- Deadload ---- Moment	Ax.Frc	----- P.T. ------ Moment	Ax.Frc	--- Live load --- Moment	Ax.Frc
1 a	-7.11	0.93	0.00	0.00	-5.39	0.19
1 b	-11.90	1.76	0.00	0.00	-9.05	0.34
1 right	-13.25	2.00	0.00	0.00	-10.86	0.37
2 left	-4.24	3.03	0.00	0.00	-4.06	-0.20
2 a	-3.44	2.86	0.00	0.00	-3.57	-0.25
2 b	0.28	2.09	0.00	0.00	-0.10	0.05
2 c	0.31	2.12	0.00	0.00	-0.69	0.95
2 right	-7.49	3.97	0.00	0.00	-7.06	-0.53
3 left	-7.66	3.95	0.00	0.00	-6.33	-0.30
3 a	-6.62	3.70	0.00	0.00	-5.66	-0.32
3 b	-0.89	2.27	0.00	0.00	-1.23	0.17
3 c	0.31	1.93	0.00	0.00	-0.64	0.53
3 right	-4.13	2.68	0.00	0.00	-4.24	-0.50
4 left	-13.50	1.60	0.00	0.00	-9.16	-0.16
4 a	-12.07	1.33	0.00	0.00	-8.33	-0.29
4 b	-2.86	-0.27	0.00	0.00	-3.78	-0.36
4 c	1.82	-0.87	0.00	0.00	-0.32	-0.36
4 right	-0.14	0.41	0.00	0.00	-6.08	0.00
5 left	-3.67	-0.26	0.00	0.00	-3.77	-1.40
5 a	-2.87	-0.41	0.00	0.00	-3.36	-1.37
5 b	0.96	-1.01	0.00	0.00	-0.59	0.33
5 c	1.16	-0.93	0.00	0.00	-0.50	0.25
5 right	-5.04	0.83	0.00	0.00	-5.02	-0.51
6 left	-6.15	0.86	0.00	0.00	-3.83	0.32
6 a	-5.15	0.69	0.00	0.00	-2.71	0.19
6 b	-1.52	0.15	0.00	0.00	-0.01	0.02
7 a	-0.50	-0.73	0.00	0.00	-0.59	0.31
7 b	-0.04	-0.31	0.00	0.00	-0.51	0.32
7 c	0.93	1.39	0.00	0.00	-0.05	0.86
8 a	-2.19	0.99	0.00	0.00	-0.75	0.26
8 b	-1.52	1.20	0.00	0.00	-0.65	0.21
8 c	0.93	1.39	0.00	0.00	-0.06	1.08
9 a	-1.45	0.88	0.00	0.00	-1.06	1.31
9 b	-0.89	1.15	0.00	0.00	-0.91	1.24
9 c	0.77	1.74	0.00	0.00	-0.08	1.14
10 top	-9.01	-3.82	0.00	0.00	-13.01	-3.68
10 a	-8.15	-3.33	0.00	0.00	-11.34	-3.09
10 b	-5.13	-1.49	0.00	0.00	-5.99	-1.45
11 top	0.16	-3.66	0.00	0.00	-8.41	-1.14
11 a	0.14	-3.07	0.00	0.00	-7.32	-1.01
11 b	0.06	-0.88	0.00	0.00	-3.58	-0.56
12 top	9.36	-3.96	0.00	0.00	-8.00	-0.63
12 a	8.46	-3.45	0.00	0.00	-7.09	-0.54
12 b	5.28	-1.55	0.00	0.00	-4.02	-0.25
13 top	3.52	-2.69	0.00	0.00	-5.28	-0.92
13 a	2.95	-2.30	0.00	0.00	-4.68	-0.82
13 b	0.96	-0.82	0.00	0.00	-2.57	-0.48
14 top	1.11	-3.43	0.00	0.00	-4.97	-0.93
14 a	1.13	-2.96	0.00	0.00	-4.41	-0.83
14 b	1.21	-1.23	0.00	0.00	-2.66	-0.59

1_IV_A_R5_EL.OUT 9/11/2009

VEH: R5 - MICHIGAN T BRUG(5.75.44) page 61
date 11/09/2009; time 13:26:34
Cline Avenue - Load Rating - Double Box AND SINGLE BOX - 8

Summary of the results (Maximum)

Section	--- Deadload ----		----- P.T. ------		--- Live load ---	
	Moment	Ax.Frc	Moment	Ax.Frc	Moment	Ax.Frc
1 a	-7.11	0.93	0.00	0.00	0.10	0.27
1 b	-11.90	1.76	0.00	0.00	-0.01	0.03
1 right	-13.25	2.00	0.00	0.00	-0.01	0.03
2 left	-4.24	3.03	0.00	0.00	1.89	2.18
2 a	-3.44	2.86	0.00	0.00	2.47	1.88
2 b	0.28	2.09	0.00	0.00	3.88	-0.03
2 c	0.31	2.12	0.00	0.00	3.43	-0.46
2 right	-7.49	3.97	0.00	0.00	1.35	1.07
3 left	-7.66	3.95	0.00	0.00	1.97	1.13
3 a	-6.62	3.70	0.00	0.00	2.19	1.03
3 b	-0.89	2.27	0.00	0.00	3.47	0.00
3 c	0.31	1.93	0.00	0.00	3.68	-0.46
3 right	-4.13	2.68	0.00	0.00	2.78	1.49
4 left	-13.50	1.60	0.00	0.00	4.32	1.00
4 a	-12.07	1.33	0.00	0.00	4.38	0.93
4 b	-2.86	-0.27	0.00	0.00	4.35	0.27
4 c	1.82	-0.87	0.00	0.00	4.24	-0.18
4 right	-0.14	0.41	0.00	0.00	7.37	0.52
5 left	-3.67	-0.26	0.00	0.00	2.38	0.54
5 a	-2.87	-0.41	0.00	0.00	2.83	0.38
5 b	0.96	-1.01	0.00	0.00	4.02	-0.59
5 c	1.16	-0.93	0.00	0.00	3.75	-1.02
5 right	-5.04	0.83	0.00	0.00	0.06	0.02
6 left	-6.15	0.86	0.00	0.00	-0.02	0.03
6 a	-5.15	0.69	0.00	0.00	-0.01	0.02
6 b	-1.52	0.15	0.00	0.00	0.08	0.07
7 a	-0.50	-0.73	0.00	0.00	1.44	-1.90
7 b	-0.04	-0.31	0.00	0.00	1.24	-1.63
7 c	0.93	1.39	0.00	0.00	0.05	-0.31
8 a	-2.19	0.99	0.00	0.00	0.99	-0.09
8 b	-1.52	1.20	0.00	0.00	0.85	0.01
8 c	0.93	1.39	0.00	0.00	0.04	-0.55
9 a	-1.45	0.88	0.00	0.00	0.53	-0.70
9 b	-0.89	1.15	0.00	0.00	0.44	-0.57
9 c	0.77	1.74	0.00	0.00	0.03	-0.23
10 top	-9.01	-3.82	0.00	0.00	4.97	-1.39
10 a	-8.15	-3.33	0.00	0.00	4.39	-1.24
10 b	-5.13	-1.49	0.00	0.00	2.51	-0.68
11 top	0.16	-3.66	0.00	0.00	8.20	-1.59
11 a	0.14	-3.07	0.00	0.00	7.15	-1.43
11 b	0.06	-0.88	0.00	0.00	3.64	-0.83
12 top	9.36	-3.96	0.00	0.00	10.38	-1.69
12 a	8.46	-3.45	0.00	0.00	9.13	-1.52
12 b	5.28	-1.55	0.00	0.00	4.88	-0.89
13 top	3.52	-2.69	0.00	0.00	11.89	-0.80
13 a	2.95	-2.30	0.00	0.00	10.49	-0.70
13 b	0.96	-0.82	0.00	0.00	5.74	-0.32
14 top	1.11	-3.43	0.00	0.00	3.79	-3.35
14 a	1.13	-2.96	0.00	0.00	3.25	-3.02
14 b	1.21	-1.23	0.00	0.00	1.41	-1.76

1_IV_A_R5_EL.OUT 9/11/2009

VEH: R5 - MICHIGAN T BRUG(5.75.44) page 62
date 11/09/2009; time 13:26:34
Cline Avenue - Load Rating - Double Box AND SINGLE BOX - 8

Summary of the results (Minimum)

Section	--- Deadload ----		----- P.T. ------		--- Live load ---	
	Moment	Ax.Frc	Moment	Ax.Frc	Moment	Ax.Frc
1 a	-7.11	0.93	0.00	0.00	-6.77	0.26
1 b	-11.90	1.76	0.00	0.00	-11.95	0.53
1 right	-13.25	2.00	0.00	0.00	-13.76	0.62
2 left	-4.24	3.03	0.00	0.00	-5.63	-0.21
2 a	-3.44	2.86	0.00	0.00	-4.97	-0.25
2 b	0.28	2.09	0.00	0.00	-0.11	0.04
2 c	0.31	2.12	0.00	0.00	-0.80	1.05
2 right	-7.49	3.97	0.00	0.00	-8.80	-0.55
3 left	-7.66	3.95	0.00	0.00	-8.06	-0.29
3 a	-6.62	3.70	0.00	0.00	-7.21	-0.32
3 b	-0.89	2.27	0.00	0.00	-1.28	0.08
3 c	0.31	1.93	0.00	0.00	-0.71	0.52
3 right	-4.13	2.68	0.00	0.00	-5.83	-0.47
4 left	-13.50	1.60	0.00	0.00	-10.91	-0.08
4 a	-12.07	1.33	0.00	0.00	-10.05	-0.12
4 b	-2.86	-0.27	0.00	0.00	-3.93	-0.39
4 c	1.82	-0.87	0.00	0.00	-0.35	-0.37
4 right	-0.14	0.41	0.00	0.00	-7.82	0.04
5 left	-3.67	-0.26	0.00	0.00	-5.54	-1.37
5 a	-2.87	-0.41	0.00	0.00	-4.83	-1.38
5 b	0.96	-1.01	0.00	0.00	-0.71	0.41
5 c	1.16	-0.93	0.00	0.00	-0.56	0.28
5 right	-5.04	0.83	0.00	0.00	-6.74	-0.53
6 left	-6.15	0.86	0.00	0.00	-4.77	0.38
6 a	-5.15	0.69	0.00	0.00	-3.66	0.30
6 b	-1.52	0.15	0.00	0.00	-0.11	0.05
7 a	-0.50	-0.73	0.00	0.00	-0.61	0.31
7 b	-0.04	-0.31	0.00	0.00	-0.53	0.32
7 c	0.93	1.39	0.00	0.00	-0.05	1.02
8 a	-2.19	0.99	0.00	0.00	-0.79	0.31
8 b	-1.52	1.20	0.00	0.00	-0.68	0.26
8 c	0.93	1.39	0.00	0.00	-0.07	1.24
9 a	-1.45	0.88	0.00	0.00	-1.11	1.38
9 b	-0.89	1.15	0.00	0.00	-0.96	1.33
9 c	0.77	1.74	0.00	0.00	-0.09	1.40
10 top	-9.01	-3.82	0.00	0.00	-14.87	-3.60
10 a	-8.15	-3.33	0.00	0.00	-13.03	-3.24
10 b	-5.13	-1.49	0.00	0.00	-6.82	-1.90
11 top	0.16	-3.66	0.00	0.00	-9.53	-1.60
11 a	0.14	-3.07	0.00	0.00	-8.27	-1.44
11 b	0.06	-0.88	0.00	0.00	-4.01	-0.83
12 top	9.36	-3.96	0.00	0.00	-9.03	-1.06
12 a	8.46	-3.45	0.00	0.00	-7.98	-0.94
12 b	5.28	-1.55	0.00	0.00	-4.44	-0.48
13 top	3.52	-2.69	0.00	0.00	-6.43	-1.51
13 a	2.95	-2.30	0.00	0.00	-5.64	-1.35
13 b	0.96	-0.82	0.00	0.00	-3.00	-0.77
14 top	1.11	-3.43	0.00	0.00	-6.15	-1.66
14 a	1.13	-2.96	0.00	0.00	-5.44	-1.48
14 b	1.21	-1.23	0.00	0.00	-3.09	-0.82

VEH: S1 - SPECIAL TR BRUG(5.75.44) page 61
date 11/09/2009; time 13:26:35
Cline Avenue - Load Rating - Double Box AND SINGLE BOX - 8

Summary of the results (Maximum)

Section	--- Deadload ---- Moment	Ax.Frc	----- P.T. ------ Moment	Ax.Frc	--- Live load --- Moment	Ax.Frc
1 a	-7.11	0.93	0.00	0.00	0.59	0.19
1 b	-11.90	1.76	0.00	0.00	-0.02	0.06
1 right	-13.25	2.00	0.00	0.00	-0.02	0.07
2 left	-4.24	3.03	0.00	0.00	2.17	2.39
2 a	-3.44	2.86	0.00	0.00	3.32	2.02
2 b	0.28	2.09	0.00	0.00	4.72	0.29
2 c	0.31	2.12	0.00	0.00	4.15	-0.59
2 right	-7.49	3.97	0.00	0.00	1.44	0.81
3 left	-7.66	3.95	0.00	0.00	2.33	1.01
3 a	-6.62	3.70	0.00	0.00	2.91	0.81
3 b	-0.89	2.27	0.00	0.00	4.45	-0.42
3 c	0.31	1.93	0.00	0.00	4.52	-0.87
3 right	-4.13	2.68	0.00	0.00	3.04	1.30
4 left	-13.50	1.60	0.00	0.00	5.51	0.80
4 a	-12.07	1.33	0.00	0.00	5.88	0.64
4 b	-2.86	-0.27	0.00	0.00	5.58	-0.04
4 c	1.82	-0.87	0.00	0.00	5.14	-0.27
4 right	-0.14	0.41	0.00	0.00	9.86	0.55
5 left	-3.67	-0.26	0.00	0.00	2.19	0.45
5 a	-2.87	-0.41	0.00	0.00	3.20	-0.02
5 b	0.96	-1.01	0.00	0.00	4.96	-0.95
5 c	1.16	-0.93	0.00	0.00	4.59	-1.20
5 right	-5.04	0.83	0.00	0.00	0.10	0.04
6 left	-6.15	0.86	0.00	0.00	-0.02	0.04
6 a	-5.15	0.69	0.00	0.00	-0.02	0.04
6 b	-1.52	0.15	0.00	0.00	0.53	0.06
7 a	-0.50	-0.73	0.00	0.00	1.66	-1.99
7 b	-0.04	-0.31	0.00	0.00	1.41	-1.71
7 c	0.93	1.39	0.00	0.00	0.05	-0.50
8 a	-2.19	0.99	0.00	0.00	1.20	-0.14
8 b	-1.52	1.20	0.00	0.00	1.03	-0.01
8 c	0.93	1.39	0.00	0.00	0.05	-0.78
9 a	-1.45	0.88	0.00	0.00	0.46	-0.61
9 b	-0.89	1.15	0.00	0.00	0.36	-0.39
9 c	0.77	1.74	0.00	0.00	0.03	-0.26
10 top	-9.01	-3.82	0.00	0.00	4.86	-1.87
10 a	-8.15	-3.33	0.00	0.00	4.20	-1.66
10 b	-5.13	-1.49	0.00	0.00	2.30	-0.87
11 top	0.16	-3.66	0.00	0.00	8.63	-2.00
11 a	0.14	-3.07	0.00	0.00	7.44	-1.79
11 b	0.06	-0.88	0.00	0.00	3.70	-1.01
12 top	9.36	-3.96	0.00	0.00	11.88	-1.77
12 a	8.46	-3.45	0.00	0.00	10.41	-1.59
12 b	5.28	-1.55	0.00	0.00	5.51	-0.72
13 top	3.52	-2.69	0.00	0.00	14.31	-0.94
13 a	2.95	-2.30	0.00	0.00	12.54	-0.81
13 b	0.96	-0.82	0.00	0.00	6.76	-0.32
14 top	1.11	-3.43	0.00	0.00	3.72	-5.68
14 a	1.13	-2.96	0.00	0.00	3.15	-4.99
14 b	1.21	-1.23	0.00	0.00	1.29	-2.63

VEH: S1 - SPECIAL TR BRUG(5.75.44) page 62
date 11/09/2009; time 13:26:35
Cline Avenue - Load Rating - Double Box AND SINGLE BOX - 8

Summary of the results (Minimum)

Section	--- Deadload ---- Moment	Ax.Frc	----- P.T. ------ Moment	Ax.Frc	--- Live load --- Moment	Ax.Frc
1 a	-7.11	0.93	0.00	0.00	-6.93	0.13
1 b	-11.90	1.76	0.00	0.00	-11.93	0.45
1 right	-13.25	2.00	0.00	0.00	-14.22	0.60
2 left	-4.24	3.03	0.00	0.00	-6.12	-0.20
2 a	-3.44	2.86	0.00	0.00	-5.45	-0.26
2 b	0.28	2.09	0.00	0.00	-1.04	-0.41
2 c	0.31	2.12	0.00	0.00	-0.70	1.10
2 right	-7.49	3.97	0.00	0.00	-9.41	-0.61
3 left	-7.66	3.95	0.00	0.00	-8.43	-0.59
3 a	-6.62	3.70	0.00	0.00	-7.59	-0.63
3 b	-0.89	2.27	0.00	0.00	-1.56	-0.54
3 c	0.31	1.93	0.00	0.00	-0.82	0.66
3 right	-4.13	2.68	0.00	0.00	-6.23	-0.90
4 left	-13.50	1.60	0.00	0.00	-12.15	-0.17
4 a	-12.07	1.33	0.00	0.00	-11.35	-0.20
4 b	-2.86	-0.27	0.00	0.00	-5.18	-0.34
4 c	1.82	-0.87	0.00	0.00	-0.39	-0.26
4 right	-0.14	0.41	0.00	0.00	-7.73	-0.03
5 left	-3.67	-0.26	0.00	0.00	-5.35	-1.67
5 a	-2.87	-0.41	0.00	0.00	-4.69	-1.67
5 b	0.96	-1.01	0.00	0.00	-0.72	0.38
5 c	1.16	-0.93	0.00	0.00	-0.56	0.28
5 right	-5.04	0.83	0.00	0.00	-7.34	-0.49
6 left	-6.15	0.86	0.00	0.00	-6.07	0.57
6 a	-5.15	0.69	0.00	0.00	-4.39	0.41
6 b	-1.52	0.15	0.00	0.00	-0.17	0.06
7 a	-0.50	-0.73	0.00	0.00	-0.69	0.38
7 b	-0.04	-0.31	0.00	0.00	-0.60	0.40
7 c	0.93	1.39	0.00	0.00	-0.05	1.07
8 a	-2.19	0.99	0.00	0.00	-0.90	0.16
8 b	-1.52	1.20	0.00	0.00	-0.78	0.11
8 c	0.93	1.39	0.00	0.00	-0.08	1.40
9 a	-1.45	0.88	0.00	0.00	-1.23	1.65
9 b	-0.89	1.15	0.00	0.00	-1.06	1.56
9 c	0.77	1.74	0.00	0.00	-0.10	1.45
10 top	-9.01	-3.82	0.00	0.00	-15.82	-5.50
10 a	-8.15	-3.33	0.00	0.00	-13.66	-4.86
10 b	-5.13	-1.49	0.00	0.00	-6.88	-2.60
11 top	0.16	-3.66	0.00	0.00	-10.46	-2.01
11 a	0.14	-3.07	0.00	0.00	-8.98	-1.79
11 b	0.06	-0.88	0.00	0.00	-4.20	-1.00
12 top	9.36	-3.96	0.00	0.00	-10.82	-1.37
12 a	8.46	-3.45	0.00	0.00	-9.47	-1.20
12 b	5.28	-1.55	0.00	0.00	-5.14	-0.58
13 top	3.52	-2.69	0.00	0.00	-6.18	-1.52
13 a	2.95	-2.30	0.00	0.00	-5.37	-1.36
13 b	0.96	-0.82	0.00	0.00	-2.83	-0.55
14 top	1.11	-3.43	0.00	0.00	-6.11	-2.20
14 a	1.13	-2.96	0.00	0.00	-5.32	-1.95
14 b	1.21	-1.23	0.00	0.00	-2.97	-1.05

1_IV_A_S2_EL.OUT 9/11/2009

VEH: S2 - SPECIAL TR BRUG(5.75.44) page 61
date 11/09/2009; time 13:26:35
Cline Avenue - Load Rating - Double Box AND SINGLE BOX - 8

Summary of the results (Maximum)

Section	--- Deadload ---		----- P.T. ------		--- Live load ---	
	Moment	Ax.Frc	Moment	Ax.Frc	Moment	Ax.Frc
1 a	-7.11	0.93	0.00	0.00	0.46	0.21
1 b	-11.90	1.76	0.00	0.00	-0.02	0.07
1 right	-13.25	2.00	0.00	0.00	-0.02	0.08
2 left	-4.24	3.03	0.00	0.00	2.46	2.31
2 a	-3.44	2.86	0.00	0.00	3.41	1.96
2 b	0.28	2.09	0.00	0.00	4.48	0.30
2 c	0.31	2.12	0.00	0.00	3.92	-0.60
2 right	-7.49	3.97	0.00	0.00	1.67	0.73
3 left	-7.66	3.95	0.00	0.00	2.56	0.92
3 a	-6.62	3.70	0.00	0.00	2.98	0.73
3 b	-0.89	2.27	0.00	0.00	4.23	-0.43
3 c	0.31	1.93	0.00	0.00	4.29	-0.89
3 right	-4.13	2.68	0.00	0.00	3.24	1.22
4 left	-13.50	1.60	0.00	0.00	5.73	0.72
4 a	-12.07	1.33	0.00	0.00	5.95	0.57
4 b	-2.86	-0.27	0.00	0.00	5.37	-0.05
4 c	1.82	-0.87	0.00	0.00	4.87	-0.29
4 right	-0.14	0.41	0.00	0.00	10.06	0.49
5 left	-3.67	-0.26	0.00	0.00	2.37	0.38
5 a	-2.87	-0.41	0.00	0.00	3.24	-0.07
5 b	0.96	-1.01	0.00	0.00	4.71	-0.94
5 c	1.16	-0.93	0.00	0.00	4.38	-1.20
5 right	-5.04	0.83	0.00	0.00	0.10	0.04
6 left	-6.15	0.86	0.00	0.00	-0.02	0.04
6 a	-5.15	0.69	0.00	0.00	-0.02	0.04
6 b	-1.52	0.15	0.00	0.00	0.42	0.06
7 a	-0.50	-0.73	0.00	0.00	1.64	-1.98
7 b	-0.04	-0.31	0.00	0.00	1.40	-1.71
7 c	0.93	1.39	0.00	0.00	0.05	-0.49
8 a	-2.19	0.99	0.00	0.00	1.19	-0.14
8 b	-1.52	1.20	0.00	0.00	1.02	-0.01
8 c	0.93	1.39	0.00	0.00	0.05	-0.78
9 a	-1.45	0.88	0.00	0.00	0.45	-0.52
9 b	-0.89	1.15	0.00	0.00	0.36	-0.63
9 c	0.77	1.74	0.00	0.00	0.03	-0.26
10 top	-9.01	-3.82	0.00	0.00	4.78	-1.64
10 a	-8.15	-3.33	0.00	0.00	4.16	-1.46
10 b	-5.13	-1.49	0.00	0.00	2.30	-0.78
11 top	0.16	-3.66	0.00	0.00	8.49	-1.78
11 a	0.14	-3.07	0.00	0.00	7.35	-1.59
11 b	0.06	-0.88	0.00	0.00	3.68	-0.91
12 top	9.36	-3.96	0.00	0.00	11.82	-1.68
12 a	8.46	-3.45	0.00	0.00	10.37	-1.51
12 b	5.28	-1.55	0.00	0.00	5.48	-0.71
13 top	3.52	-2.69	0.00	0.00	14.14	-0.69
13 a	2.95	-2.30	0.00	0.00	12.43	-0.59
13 b	0.96	-0.82	0.00	0.00	6.74	-0.22
14 top	1.11	-3.43	0.00	0.00	3.60	-4.87
14 a	1.13	-2.96	0.00	0.00	3.06	-4.26
14 b	1.21	-1.23	0.00	0.00	1.26	-2.23

1_IV_A_S2_EL.OUT 9/11/2009

VEH: S2 - SPECIAL TR BRUG(5.75.44) page 62
date 11/09/2009; time 13:26:35
Cline Avenue - Load Rating - Double Box AND SINGLE BOX - 8

Summary of the results (Minimum)

Section	--- Deadload ---		----- P.T. ------		--- Live load ---	
	Moment	Ax.Frc	Moment	Ax.Frc	Moment	Ax.Frc
1 a	-7.11	0.93	0.00	0.00	-6.74	0.15
1 b	-11.90	1.76	0.00	0.00	-11.59	0.44
1 right	-13.25	2.00	0.00	0.00	-13.70	0.57
2 left	-4.24	3.03	0.00	0.00	-5.85	-0.21
2 a	-3.44	2.86	0.00	0.00	-5.21	-0.27
2 b	0.28	2.09	0.00	0.00	-1.00	-0.13
2 c	0.31	2.12	0.00	0.00	-0.70	1.10
2 right	-7.49	3.97	0.00	0.00	-9.12	-0.61
3 left	-7.66	3.95	0.00	0.00	-8.15	-0.61
3 a	-6.62	3.70	0.00	0.00	-7.33	-0.65
3 b	-0.89	2.27	0.00	0.00	-1.44	-0.56
3 c	0.31	1.93	0.00	0.00	-0.81	0.66
3 right	-4.13	2.68	0.00	0.00	-5.99	-0.92
4 left	-13.50	1.60	0.00	0.00	-12.08	-0.17
4 a	-12.07	1.33	0.00	0.00	-11.28	-0.20
4 b	-2.86	-0.27	0.00	0.00	-5.15	-0.32
4 c	1.82	-0.87	0.00	0.00	-0.39	-0.25
4 right	-0.14	0.41	0.00	0.00	-7.67	-0.04
5 left	-3.67	-0.26	0.00	0.00	-5.03	-1.66
5 a	-2.87	-0.41	0.00	0.00	-4.39	-1.65
5 b	0.96	-1.01	0.00	0.00	-0.72	0.38
5 c	1.16	-0.93	0.00	0.00	-0.55	0.27
5 right	-5.04	0.83	0.00	0.00	-7.00	-0.50
6 left	-6.15	0.86	0.00	0.00	-5.47	0.51
6 a	-5.15	0.69	0.00	0.00	-4.01	0.37
6 b	-1.52	0.15	0.00	0.00	-0.16	0.05
7 a	-0.50	-0.73	0.00	0.00	-0.68	0.38
7 b	-0.04	-0.31	0.00	0.00	-0.59	0.39
7 c	0.93	1.39	0.00	0.00	-0.05	1.09
8 a	-2.19	0.99	0.00	0.00	-0.89	0.13
8 b	-1.52	1.20	0.00	0.00	-0.78	0.10
8 c	0.93	1.39	0.00	0.00	-0.08	1.41
9 a	-1.45	0.88	0.00	0.00	-1.21	1.63
9 b	-0.89	1.15	0.00	0.00	-1.05	1.55
9 c	0.77	1.74	0.00	0.00	-0.10	1.47
10 top	-9.01	-3.82	0.00	0.00	-15.56	-4.79
10 a	-8.15	-3.33	0.00	0.00	-13.48	-4.20
10 b	-5.13	-1.49	0.00	0.00	-6.85	-2.25
11 top	0.16	-3.66	0.00	0.00	-10.31	-1.78
11 a	0.14	-3.07	0.00	0.00	-8.88	-1.59
11 b	0.06	-0.88	0.00	0.00	-4.18	-0.91
12 top	9.36	-3.96	0.00	0.00	-10.72	-1.14
12 a	8.46	-3.45	0.00	0.00	-9.41	-1.00
12 b	5.28	-1.55	0.00	0.00	-5.15	-0.49
13 top	3.52	-2.69	0.00	0.00	-6.13	-1.44
13 a	2.95	-2.30	0.00	0.00	-5.35	-1.29
13 b	0.96	-0.82	0.00	0.00	-2.81	-0.54
14 top	1.11	-3.43	0.00	0.00	-5.98	-1.94
14 a	1.13	-2.96	0.00	0.00	-5.25	-1.72
14 b	1.21	-1.23	0.00	0.00	-2.96	-0.94

VEH: S3 - SPECIAL TR BRUG(5.75.44) page 61
date 11/09/2009; time 13:26:36
Cline Avenue - Load Rating - Double Box AND SINGLE BOX - 8

Summary of the results (Maximum)

Section	--- Deadload ---- Moment	Ax.Frc	----- P.T. ------ Moment	Ax.Frc	--- Live load --- Moment	Ax.Frc
1 a	-7.11	0.93	0.00	0.00	0.40	0.29
1 b	-11.90	1.76	0.00	0.00	-0.02	0.08
1 right	-13.25	2.00	0.00	0.00	-0.03	0.09
2 left	-4.24	3.03	0.00	0.00	3.70	3.02
2 a	-3.44	2.86	0.00	0.00	4.64	2.58
2 b	0.28	2.09	0.00	0.00	5.69	0.39
2 c	0.31	2.12	0.00	0.00	4.89	-0.76
2 right	-7.49	3.97	0.00	0.00	2.51	0.99
3 left	-7.66	3.95	0.00	0.00	3.64	1.26
3 a	-6.62	3.70	0.00	0.00	4.01	1.05
3 b	-0.89	2.27	0.00	0.00	5.28	-0.43
3 c	0.31	1.93	0.00	0.00	5.36	-1.06
3 right	-4.13	2.68	0.00	0.00	4.67	1.66
4 left	-13.50	1.60	0.00	0.00	7.72	0.99
4 a	-12.07	1.33	0.00	0.00	7.83	0.83
4 b	-2.86	-0.27	0.00	0.00	6.81	0.05
4 c	1.82	-0.87	0.00	0.00	6.08	-0.35
4 right	-0.14	0.41	0.00	0.00	13.21	0.56
5 left	-3.67	-0.26	0.00	0.00	3.64	0.23
5 a	-2.87	-0.41	0.00	0.00	4.52	-0.05
5 b	0.96	-1.01	0.00	0.00	5.97	-1.18
5 c	1.16	-0.93	0.00	0.00	5.50	-1.58
5 right	-5.04	0.83	0.00	0.00	0.12	0.04
6 left	-6.15	0.86	0.00	0.00	-0.03	0.05
6 a	-5.15	0.69	0.00	0.00	-0.02	0.04
6 b	-1.52	0.15	0.00	0.00	0.36	0.08
7 a	-0.50	-0.73	0.00	0.00	2.18	-2.67
7 b	-0.04	-0.31	0.00	0.00	1.87	-2.33
7 c	0.93	1.39	0.00	0.00	0.07	-0.64
8 a	-2.19	0.99	0.00	0.00	1.57	-0.16
8 b	-1.52	1.20	0.00	0.00	1.35	0.00
8 c	0.93	1.39	0.00	0.00	0.07	-1.00
9 a	-1.45	0.88	0.00	0.00	0.63	-0.76
9 b	-0.89	1.15	0.00	0.00	0.52	-0.59
9 c	0.77	1.74	0.00	0.00	0.04	-0.34
10 top	-9.01	-3.82	0.00	0.00	6.40	-1.93
10 a	-8.15	-3.33	0.00	0.00	5.63	-1.71
10 b	-5.13	-1.49	0.00	0.00	3.19	-0.93
11 top	0.16	-3.66	0.00	0.00	11.40	-2.13
11 a	0.14	-3.07	0.00	0.00	9.93	-1.91
11 b	0.06	-0.88	0.00	0.00	5.03	-1.10
12 top	9.36	-3.96	0.00	0.00	15.58	-2.10
12 a	8.46	-3.45	0.00	0.00	13.71	-1.89
12 b	5.28	-1.55	0.00	0.00	7.32	-1.13
13 top	3.52	-2.69	0.00	0.00	18.46	-0.74
13 a	2.95	-2.30	0.00	0.00	16.28	-0.62
13 b	0.96	-0.82	0.00	0.00	8.90	-0.21
14 top	1.11	-3.43	0.00	0.00	5.00	-5.42
14 a	1.13	-2.96	0.00	0.00	4.26	-4.76
14 b	1.21	-1.23	0.00	0.00	1.79	-2.56

VEH: S3 - SPECIAL TR BRUG(5.75.44) page 62
date 11/09/2009; time 13:26:36
Cline Avenue - Load Rating - Double Box AND SINGLE BOX - 8

Summary of the results (Minimum)

Section	--- Deadload ---- Moment	Ax.Frc	----- P.T. ------ Moment	Ax.Frc	--- Live load --- Moment	Ax.Frc
1 a	-7.11	0.93	0.00	0.00	-8.86	0.25
1 b	-11.90	1.76	0.00	0.00	-15.37	0.59
1 right	-13.25	2.00	0.00	0.00	-17.97	0.73
2 left	-4.24	3.03	0.00	0.00	-7.44	-0.30
2 a	-3.44	2.86	0.00	0.00	-6.59	-0.37
2 b	0.28	2.09	0.00	0.00	-1.35	-0.11
2 c	0.31	2.12	0.00	0.00	-0.99	1.48
2 right	-7.49	3.97	0.00	0.00	-11.95	-0.83
3 left	-7.66	3.95	0.00	0.00	-10.70	-0.73
3 a	-6.62	3.70	0.00	0.00	-9.59	-0.78
3 b	-0.89	2.27	0.00	0.00	-1.87	-0.15
3 c	0.31	1.93	0.00	0.00	-1.06	0.80
3 right	-4.13	2.68	0.00	0.00	-7.67	-1.11
4 left	-13.50	1.60	0.00	0.00	-15.85	-0.24
4 a	-12.07	1.33	0.00	0.00	-14.77	-0.28
4 b	-2.86	-0.27	0.00	0.00	-6.60	-0.50
4 c	1.82	-0.87	0.00	0.00	-0.51	-0.38
4 right	-0.14	0.41	0.00	0.00	-10.24	-0.04
5 left	-3.67	-0.26	0.00	0.00	-6.60	-2.19
5 a	-2.87	-0.41	0.00	0.00	-5.73	-2.18
5 b	0.96	-1.01	0.00	0.00	-0.96	0.51
5 c	1.16	-0.93	0.00	0.00	-0.74	0.36
5 right	-5.04	0.83	0.00	0.00	-9.03	-0.72
6 left	-6.15	0.86	0.00	0.00	-6.62	0.57
6 a	-5.15	0.69	0.00	0.00	-4.94	0.42
6 b	-1.52	0.15	0.00	0.00	-0.17	0.06
7 a	-0.50	-0.73	0.00	0.00	-0.92	0.50
7 b	-0.04	-0.31	0.00	0.00	-0.80	0.52
7 c	0.93	1.39	0.00	0.00	-0.07	1.46
8 a	-2.19	0.99	0.00	0.00	-1.20	0.25
8 b	-1.52	1.20	0.00	0.00	-1.04	0.18
8 c	0.93	1.39	0.00	0.00	-0.10	1.87
9 a	-1.45	0.88	0.00	0.00	-1.64	2.16
9 b	-0.89	1.15	0.00	0.00	-1.42	2.05
9 c	0.77	1.74	0.00	0.00	-0.13	1.96
10 top	-9.01	-3.82	0.00	0.00	-20.79	-5.43
10 a	-8.15	-3.33	0.00	0.00	-18.12	-4.79
10 b	-5.13	-1.49	0.00	0.00	-9.35	-2.62
11 top	0.16	-3.66	0.00	0.00	-13.73	-2.14
11 a	0.14	-3.07	0.00	0.00	-11.89	-1.91
11 b	0.06	-0.88	0.00	0.00	-5.67	-1.10
12 top	9.36	-3.96	0.00	0.00	-13.93	-1.29
12 a	8.46	-3.45	0.00	0.00	-12.29	-1.13
12 b	5.28	-1.55	0.00	0.00	-6.80	-0.55
13 top	3.52	-2.69	0.00	0.00	-8.35	-1.79
13 a	2.95	-2.30	0.00	0.00	-7.32	-1.60
13 b	0.96	-0.82	0.00	0.00	-3.91	-0.92
14 top	1.11	-3.43	0.00	0.00	-8.08	-2.32
14 a	1.13	-2.96	0.00	0.00	-7.13	-2.06
14 b	1.21	-1.23	0.00	0.00	-4.08	-1.14

1_IV_A_S4_EL.OUT 9/11/2009

VEH: S4 - SUPER LOAD BRUG(5.75.44) page 61
date 11/09/2009; time 13:26:37
Cline Avenue - Load Rating - Double Box AND SINGLE BOX - 8

Summary of the results (Maximum)

Section	--- Deadload ---- Moment	Ax.Frc	----- P.T. ------ Moment	Ax.Frc	--- Live load --- Moment	Ax.Frc
1 a	-7.11	0.93	0.00	0.00	0.37	0.13
1 b	-11.90	1.76	0.00	0.00	-0.02	0.07
1 right	-13.25	2.00	0.00	0.00	-0.02	0.08
2 left	-4.24	3.03	0.00	0.00	3.53	2.08
2 a	-3.44	2.86	0.00	0.00	4.14	1.78
2 b	0.28	2.09	0.00	0.00	4.12	0.31
2 c	0.31	2.12	0.00	0.00	3.32	-0.57
2 right	-7.49	3.97	0.00	0.00	2.29	0.49
3 left	-7.66	3.95	0.00	0.00	3.23	0.73
3 a	-6.62	3.70	0.00	0.00	3.49	0.56
3 b	-0.89	2.27	0.00	0.00	3.85	-0.47
3 c	0.31	1.93	0.00	0.00	3.72	-0.89
3 right	-4.13	2.68	0.00	0.00	4.03	0.95
4 left	-13.50	1.60	0.00	0.00	6.57	0.44
4 a	-12.07	1.33	0.00	0.00	6.60	0.35
4 b	-2.86	-0.27	0.00	0.00	5.12	-0.07
4 c	1.82	-0.87	0.00	0.00	4.13	-0.24
4 right	-0.14	0.41	0.00	0.00	11.10	0.25
5 left	-3.67	-0.26	0.00	0.00	3.12	-0.14
5 a	-2.87	-0.41	0.00	0.00	3.76	-0.34
5 b	0.96	-1.01	0.00	0.00	4.33	-1.00
5 c	1.16	-0.93	0.00	0.00	3.86	-1.19
5 right	-5.04	0.83	0.00	0.00	0.11	0.04
6 left	-6.15	0.86	0.00	0.00	-0.03	0.05
6 a	-5.15	0.69	0.00	0.00	-0.02	0.04
6 b	-1.52	0.15	0.00	0.00	0.33	0.03
7 a	-0.50	-0.73	0.00	0.00	1.66	-1.92
7 b	-0.04	-0.31	0.00	0.00	1.43	-1.71
7 c	0.93	1.39	0.00	0.00	0.05	-0.58
8 a	-2.19	0.99	0.00	0.00	1.22	-0.10
8 b	-1.52	1.20	0.00	0.00	1.06	0.02
8 c	0.93	1.39	0.00	0.00	0.05	-0.82
9 a	-1.45	0.88	0.00	0.00	0.41	-0.67
9 b	-0.89	1.15	0.00	0.00	0.35	-0.58
9 c	0.77	1.74	0.00	0.00	0.03	-0.28
10 top	-9.01	-3.82	0.00	0.00	4.14	-0.82
10 a	-8.15	-3.33	0.00	0.00	3.65	-0.73
10 b	-5.13	-1.49	0.00	0.00	2.12	-0.62
11 top	0.16	-3.66	0.00	0.00	8.09	-1.41
11 a	0.14	-3.07	0.00	0.00	7.05	-1.26
11 b	0.06	-0.88	0.00	0.00	3.59	-0.71
12 top	9.36	-3.96	0.00	0.00	11.86	-1.21
12 a	8.46	-3.45	0.00	0.00	10.48	-1.09
12 b	5.28	-1.55	0.00	0.00	5.69	-0.64
13 top	3.52	-2.69	0.00	0.00	14.11	-0.28
13 a	2.95	-2.30	0.00	0.00	12.44	-0.22
13 b	0.96	-0.82	0.00	0.00	6.82	-0.01
14 top	1.11	-3.43	0.00	0.00	3.58	-3.95
14 a	1.13	-2.96	0.00	0.00	3.04	-3.47
14 b	1.21	-1.23	0.00	0.00	1.25	-1.84

1_IV_A_S4_EL.OUT 9/11/2009

VEH: S4 - SUPER LOAD BRUG(5.75.44) page 62
date 11/09/2009; time 13:26:37
Cline Avenue - Load Rating - Double Box AND SINGLE BOX - 8

Summary of the results (Minimum)

Section	--- Deadload ---- Moment	Ax.Frc	----- P.T. ------ Moment	Ax.Frc	--- Live load --- Moment	Ax.Frc
1 a	-7.11	0.93	0.00	0.00	-5.74	0.11
1 b	-11.90	1.76	0.00	0.00	-9.93	0.31
1 right	-13.25	2.00	0.00	0.00	-11.72	0.40
2 left	-4.24	3.03	0.00	0.00	-4.75	-0.23
2 a	-3.44	2.86	0.00	0.00	-4.21	-0.33
2 b	0.28	2.09	0.00	0.00	-1.08	-0.17
2 c	0.31	2.12	0.00	0.00	-0.66	1.10
2 right	-7.49	3.97	0.00	0.00	-8.12	-0.64
3 left	-7.66	3.95	0.00	0.00	-7.09	-0.65
3 a	-6.62	3.70	0.00	0.00	-6.35	-0.69
3 b	-0.89	2.27	0.00	0.00	-1.45	-0.03
3 c	0.31	1.93	0.00	0.00	-0.85	0.68
3 right	-4.13	2.68	0.00	0.00	-4.88	-0.99
4 left	-13.50	1.60	0.00	0.00	-11.82	-0.26
4 a	-12.07	1.33	0.00	0.00	-11.13	-0.28
4 b	-2.86	-0.27	0.00	0.00	-5.48	-0.32
4 c	1.82	-0.87	0.00	0.00	-0.41	-0.24
4 right	-0.14	0.41	0.00	0.00	-7.11	-0.04
5 left	-3.67	-0.26	0.00	0.00	-3.91	-1.74
5 a	-2.87	-0.41	0.00	0.00	-3.36	-1.72
5 b	0.96	-1.01	0.00	0.00	-0.75	0.41
5 c	1.16	-0.93	0.00	0.00	-0.57	0.30
5 right	-5.04	0.83	0.00	0.00	-6.00	-0.50
6 left	-6.15	0.86	0.00	0.00	-4.44	0.34
6 a	-5.15	0.69	0.00	0.00	-3.25	0.24
6 b	-1.52	0.15	0.00	0.00	-0.07	0.03
7 a	-0.50	-0.73	0.00	0.00	-0.71	0.40
7 b	-0.04	-0.31	0.00	0.00	-0.62	0.41
7 c	0.93	1.39	0.00	0.00	-0.05	1.02
8 a	-2.19	0.99	0.00	0.00	-0.92	0.10
8 b	-1.52	1.20	0.00	0.00	-0.80	0.05
8 c	0.93	1.39	0.00	0.00	-0.08	1.36
9 a	-1.45	0.88	0.00	0.00	-1.25	1.68
9 b	-0.89	1.15	0.00	0.00	-1.09	1.58
9 c	0.77	1.74	0.00	0.00	-0.10	1.34
10 top	-9.01	-3.82	0.00	0.00	-14.82	-3.71
10 a	-8.15	-3.33	0.00	0.00	-12.90	-3.27
10 b	-5.13	-1.49	0.00	0.00	-6.65	-1.77
11 top	0.16	-3.66	0.00	0.00	-10.01	-1.41
11 a	0.14	-3.07	0.00	0.00	-8.66	-1.26
11 b	0.06	-0.88	0.00	0.00	-4.11	-0.71
12 top	9.36	-3.96	0.00	0.00	-10.49	-0.76
12 a	8.46	-3.45	0.00	0.00	-9.26	-0.66
12 b	5.28	-1.55	0.00	0.00	-5.13	-0.30
13 top	3.52	-2.69	0.00	0.00	-5.88	-0.88
13 a	2.95	-2.30	0.00	0.00	-5.21	-0.79
13 b	0.96	-0.82	0.00	0.00	-2.87	-0.47
14 top	1.11	-3.43	0.00	0.00	-5.47	-1.62
14 a	1.13	-2.96	0.00	0.00	-4.84	-1.44
14 b	1.21	-1.23	0.00	0.00	-2.81	-0.78

VEH: S5 - SUPERLOAD BRUG(5.75.44) page 61
date 11/09/2009; time 13:26:37
Cline Avenue - Load Rating - Double Box AND SINGLE BOX - 8

Summary of the results (Maximum)

Section	--- Deadload ---		----- P.T. ------		--- Live load ---	
	Moment	Ax.Frc	Moment	Ax.Frc	Moment	Ax.Frc
1 a	-7.11	0.93	0.00	0.00	0.50	0.22
1 b	-11.90	1.76	0.00	0.00	-0.03	0.10
1 right	-13.25	2.00	0.00	0.00	-0.03	0.11
2 left	-4.24	3.03	0.00	0.00	3.95	2.82
2 a	-3.44	2.86	0.00	0.00	4.93	2.40
2 b	0.28	2.09	0.00	0.00	5.54	0.42
2 c	0.31	2.12	0.00	0.00	4.63	-0.79
2 right	-7.49	3.97	0.00	0.00	2.59	0.63
3 left	-7.66	3.95	0.00	0.00	3.83	0.94
3 a	-6.62	3.70	0.00	0.00	4.27	0.71
3 b	-0.89	2.27	0.00	0.00	5.26	-0.72
3 c	0.31	1.93	0.00	0.00	5.16	-1.29
3 right	-4.13	2.68	0.00	0.00	4.69	1.26
4 left	-13.50	1.60	0.00	0.00	8.23	0.56
4 a	-12.07	1.33	0.00	0.00	8.37	0.44
4 b	-2.86	-0.27	0.00	0.00	6.86	-0.19
4 c	1.82	-0.87	0.00	0.00	5.79	-0.40
4 right	-0.14	0.41	0.00	0.00	14.24	0.44
5 left	-3.67	-0.26	0.00	0.00	3.41	-0.16
5 a	-2.87	-0.41	0.00	0.00	4.40	-0.41
5 b	0.96	-1.01	0.00	0.00	5.83	-1.33
5 c	1.16	-0.93	0.00	0.00	5.33	-1.58
5 right	-5.04	0.83	0.00	0.00	0.15	0.05
6 left	-6.15	0.86	0.00	0.00	-0.03	0.06
6 a	-5.15	0.69	0.00	0.00	-0.03	0.05
6 b	-1.52	0.15	0.00	0.00	0.46	0.07
7 a	-0.50	-0.73	0.00	0.00	2.15	-2.51
7 b	-0.04	-0.31	0.00	0.00	1.84	-2.20
7 c	0.93	1.39	0.00	0.00	0.06	-0.72
8 a	-2.19	0.99	0.00	0.00	1.59	-0.17
8 b	-1.52	1.20	0.00	0.00	1.37	-0.01
8 c	0.93	1.39	0.00	0.00	0.07	-1.07
9 a	-1.45	0.88	0.00	0.00	0.53	-0.88
9 b	-0.89	1.15	0.00	0.00	0.44	-0.81
9 c	0.77	1.74	0.00	0.00	0.04	-0.36
10 top	-9.01	-3.82	0.00	0.00	5.75	-1.51
10 a	-8.15	-3.33	0.00	0.00	5.03	-1.34
10 b	-5.13	-1.49	0.00	0.00	2.78	-0.92
11 top	0.16	-3.66	0.00	0.00	10.63	-2.06
11 a	0.14	-3.07	0.00	0.00	9.23	-1.84
11 b	0.06	-0.88	0.00	0.00	4.65	-1.06
12 top	9.36	-3.96	0.00	0.00	15.56	-1.66
12 a	8.46	-3.45	0.00	0.00	13.73	-1.50
12 b	5.28	-1.55	0.00	0.00	7.44	-0.86
13 top	3.52	-2.69	0.00	0.00	18.66	-0.54
13 a	2.95	-2.30	0.00	0.00	16.43	-0.45
13 b	0.96	-0.82	0.00	0.00	8.95	-0.11
14 top	1.11	-3.43	0.00	0.00	4.42	-5.62
14 a	1.13	-2.96	0.00	0.00	3.76	-4.93
14 b	1.21	-1.23	0.00	0.00	1.52	-2.61

VEH: S5 - SUPERLOAD BRUG(5.75.44) page 62
date 11/09/2009; time 13:26:37
Cline Avenue - Load Rating - Double Box AND SINGLE BOX - 8

Summary of the results (Minimum)

Section	--- Deadload ---		----- P.T. ------		--- Live load ---	
	Moment	Ax.Frc	Moment	Ax.Frc	Moment	Ax.Frc
1 a	-7.11	0.93	0.00	0.00	-7.98	0.15
1 b	-11.90	1.76	0.00	0.00	-13.76	0.46
1 right	-13.25	2.00	0.00	0.00	-16.22	0.60
2 left	-4.24	3.03	0.00	0.00	-6.89	-0.29
2 a	-3.44	2.86	0.00	0.00	-6.12	-0.35
2 b	0.28	2.09	0.00	0.00	-1.34	-0.24
2 c	0.31	2.12	0.00	0.00	-0.84	1.42
2 right	-7.49	3.97	0.00	0.00	-11.12	-0.80
3 left	-7.66	3.95	0.00	0.00	-9.78	-0.91
3 a	-6.62	3.70	0.00	0.00	-8.78	-0.97
3 b	-0.89	2.27	0.00	0.00	-1.81	-0.33
3 c	0.31	1.93	0.00	0.00	-1.12	0.95
3 right	-4.13	2.68	0.00	0.00	-7.06	-1.36
4 left	-13.50	1.60	0.00	0.00	-15.57	-0.30
4 a	-12.07	1.33	0.00	0.00	-14.66	-0.34
4 b	-2.86	-0.27	0.00	0.00	-7.18	-0.35
4 c	1.82	-0.87	0.00	0.00	-0.54	-0.25
4 right	-0.14	0.41	0.00	0.00	-9.35	-0.08
5 left	-3.67	-0.26	0.00	0.00	-5.56	-2.25
5 a	-2.87	-0.41	0.00	0.00	-4.82	-2.22
5 b	0.96	-1.01	0.00	0.00	-0.98	0.53
5 c	1.16	-0.93	0.00	0.00	-0.74	0.39
5 right	-5.04	0.83	0.00	0.00	-8.37	-0.64
6 left	-6.15	0.86	0.00	0.00	-6.38	0.56
6 a	-5.15	0.69	0.00	0.00	-4.69	0.41
6 b	-1.52	0.15	0.00	0.00	-0.18	0.06
7 a	-0.50	-0.73	0.00	0.00	-0.90	0.51
7 b	-0.04	-0.31	0.00	0.00	-0.79	0.52
7 c	0.93	1.39	0.00	0.00	-0.06	1.38
8 a	-2.19	0.99	0.00	0.00	-1.18	0.09
8 b	-1.52	1.20	0.00	0.00	-1.03	0.03
8 c	0.93	1.39	0.00	0.00	-0.10	1.84
9 a	-1.45	0.88	0.00	0.00	-1.58	2.18
9 b	-0.89	1.15	0.00	0.00	-1.38	2.06
9 c	0.77	1.74	0.00	0.00	-0.13	1.84
10 top	-9.01	-3.82	0.00	0.00	-19.52	-5.41
10 a	-8.15	-3.33	0.00	0.00	-16.94	-4.76
10 b	-5.13	-1.49	0.00	0.00	-8.62	-2.58
11 top	0.16	-3.66	0.00	0.00	-13.16	-2.06
11 a	0.14	-3.07	0.00	0.00	-11.35	-1.84
11 b	0.06	-0.88	0.00	0.00	-5.33	-1.05
12 top	9.36	-3.96	0.00	0.00	-14.06	-1.21
12 a	8.46	-3.45	0.00	0.00	-12.37	-1.05
12 b	5.28	-1.55	0.00	0.00	-6.78	-0.50
13 top	3.52	-2.69	0.00	0.00	-7.65	-1.31
13 a	2.95	-2.30	0.00	0.00	-6.75	-1.07
13 b	0.96	-0.82	0.00	0.00	-3.71	-0.63
14 top	1.11	-3.43	0.00	0.00	-7.26	-2.30
14 a	1.13	-2.96	0.00	0.00	-6.38	-2.04
14 b	1.21	-1.23	0.00	0.00	-3.66	-1.13

IV_A_HL93_truck_EL.OUT 9/11/2009

VEH: HL93 TRUCK BRUG(5.75.44) page 61
date 11/09/2009; time 13:26:39
Cline Avenue - Load Rating - Double Box AND SINGLE BOX - 8

Summary of the results (Maximum)

Section	--- Deadload ----		----- P.T. ------		--- Live load ---	
	Moment	Ax.Frc	Moment	Ax.Frc	Moment	Ax.Frc
1 a	-7.11	0.93	0.00	0.00	1.02	0.25
1 b	-11.90	1.76	0.00	0.00	0.06	0.17
1 right	-13.25	2.00	0.00	0.00	0.08	0.19
2 left	-4.24	3.03	0.00	0.00	-0.11	0.00
2 a	-3.44	2.86	0.00	0.00	1.05	1.60
2 b	0.28	2.09	0.00	0.00	4.09	0.13
2 c	0.31	2.12	0.00	0.00	4.86	-0.40
2 right	-7.49	3.97	0.00	0.00	0.80	0.59
3 left	-7.66	3.95	0.00	0.00	0.96	0.54
3 a	-6.62	3.70	0.00	0.00	1.92	1.48
3 b	-0.89	2.27	0.00	0.00	3.96	0.24
3 c	0.31	1.93	0.00	0.00	5.16	-0.35
3 right	-4.13	2.68	0.00	0.00	0.61	1.60
4 left	-13.50	1.60	0.00	0.00	4.27	0.24
4 a	-12.07	1.33	0.00	0.00	4.36	1.11
4 b	-2.86	-0.27	0.00	0.00	5.04	0.19
4 c	1.82	-0.87	0.00	0.00	6.72	-0.27
4 right	-0.14	0.41	0.00	0.00	6.97	0.93
5 left	-3.67	-0.26	0.00	0.00	0.40	1.17
5 a	-2.87	-0.41	0.00	0.00	1.63	0.69
5 b	0.96	-1.01	0.00	0.00	4.40	-0.90
5 c	1.16	-0.93	0.00	0.00	4.91	-1.06
5 right	-5.04	0.83	0.00	0.00	0.08	0.01
6 left	-6.15	0.86	0.00	0.00	0.10	0.08
6 a	-5.15	0.69	0.00	0.00	0.08	0.06
6 b	-1.52	0.15	0.00	0.00	0.92	0.04
7 a	-0.50	-0.73	0.00	0.00	1.22	-0.90
7 b	-0.04	-0.31	0.00	0.00	1.04	-0.55
7 c	0.93	1.39	0.00	0.00	0.06	0.07
8 a	-2.19	0.99	0.00	0.00	1.11	-0.25
8 b	-1.52	1.20	0.00	0.00	0.94	-0.08
8 c	0.93	1.39	0.00	0.00	0.05	-0.62
9 a	-1.45	0.88	0.00	0.00	0.66	-0.77
9 b	-0.89	1.15	0.00	0.00	0.53	-0.55
9 c	0.77	1.74	0.00	0.00	0.04	-0.27
10 top	-9.01	-3.82	0.00	0.00	5.53	-4.48
10 a	-8.15	-3.33	0.00	0.00	4.65	-3.82
10 b	-5.13	-1.49	0.00	0.00	2.45	-1.75
11 top	0.16	-3.66	0.00	0.00	9.36	-4.72
11 a	0.14	-3.07	0.00	0.00	7.92	-4.06
11 b	0.06	-0.88	0.00	0.00	3.81	-1.97
12 top	9.36	-3.96	0.00	0.00	12.90	-4.07
12 a	8.46	-3.45	0.00	0.00	11.10	-3.55
12 b	5.28	-1.55	0.00	0.00	5.71	-1.82
13 top	3.52	-2.69	0.00	0.00	13.05	-4.25
13 a	2.95	-2.30	0.00	0.00	11.26	-3.57
13 b	0.96	-0.82	0.00	0.00	5.93	-1.47
14 top	1.11	-3.43	0.00	0.00	2.66	-6.67
14 a	1.13	-2.96	0.00	0.00	2.22	-5.66
14 b	1.21	-1.23	0.00	0.00	0.93	-2.57

IV_A_HL93_truck_EL.OUT 9/11/2009

VEH: HL93 TRUCK BRUG(5.75.44) page 62
date 11/09/2009; time 13:26:39
Cline Avenue - Load Rating - Double Box AND SINGLE BOX - 8

Summary of the results (Minimum)

Section	--- Deadload ----		----- P.T. ------		--- Live load ---	
	Moment	Ax.Frc	Moment	Ax.Frc	Moment	Ax.Frc
1 a	-7.11	0.93	0.00	0.00	-6.27	0.37
1 b	-11.90	1.76	0.00	0.00	-11.01	1.06
1 right	-13.25	2.00	0.00	0.00	-13.95	1.43
2 left	-4.24	3.03	0.00	0.00	-7.81	1.66
2 a	-3.44	2.86	0.00	0.00	-6.37	-0.20
2 b	0.28	2.09	0.00	0.00	-1.32	-0.14
2 c	0.31	2.12	0.00	0.00	-0.91	0.84
2 right	-7.49	3.97	0.00	0.00	-10.82	-0.29
3 left	-7.66	3.95	0.00	0.00	-10.12	-0.03
3 a	-6.62	3.70	0.00	0.00	-8.73	-0.12
3 b	-0.89	2.27	0.00	0.00	-1.97	-0.05
3 c	0.31	1.93	0.00	0.00	-0.80	0.46
3 right	-4.13	2.68	0.00	0.00	-7.72	-0.31
4 left	-13.50	1.60	0.00	0.00	-14.72	0.10
4 a	-12.07	1.33	0.00	0.00	-13.16	-0.02
4 b	-2.86	-0.27	0.00	0.00	-5.05	-0.50
4 c	1.82	-0.87	0.00	0.00	-0.34	-0.46
4 right	-0.14	0.41	0.00	0.00	-11.26	0.23
5 left	-3.67	-0.26	0.00	0.00	-6.81	0.10
5 a	-2.87	-0.41	0.00	0.00	-5.07	-0.62
5 b	0.96	-1.01	0.00	0.00	-1.11	-0.37
5 c	1.16	-0.93	0.00	0.00	-0.64	0.34
5 right	-5.04	0.83	0.00	0.00	-8.95	0.83
6 left	-6.15	0.86	0.00	0.00	-6.95	1.01
6 a	-5.15	0.69	0.00	0.00	-4.76	0.69
6 b	-1.52	0.15	0.00	0.00	-0.17	0.08
7 a	-0.50	-0.73	0.00	0.00	-0.67	0.37
7 b	-0.04	-0.31	0.00	0.00	-0.58	0.39
7 c	0.93	1.39	0.00	0.00	-0.05	1.24
8 a	-2.19	0.99	0.00	0.00	-0.90	0.72
8 b	-1.52	1.20	0.00	0.00	-0.78	0.67
8 c	0.93	1.39	0.00	0.00	-0.07	1.51
9 a	-1.45	0.88	0.00	0.00	-0.79	1.76
9 b	-0.89	1.15	0.00	0.00	-0.67	1.81
9 c	0.77	1.74	0.00	0.00	-0.09	1.66
10 top	-9.01	-3.82	0.00	0.00	-11.03	-6.53
10 a	-8.15	-3.33	0.00	0.00	-9.35	-5.57
10 b	-5.13	-1.49	0.00	0.00	-4.66	-2.59
11 top	0.16	-3.66	0.00	0.00	-10.81	-4.71
11 a	0.14	-3.07	0.00	0.00	-9.13	-4.05
11 b	0.06	-0.88	0.00	0.00	-4.19	-1.96
12 top	9.36	-3.96	0.00	0.00	-10.25	-4.13
12 a	8.46	-3.45	0.00	0.00	-8.81	-3.50
12 b	5.28	-1.55	0.00	0.00	-4.69	-1.53
13 top	3.52	-2.69	0.00	0.00	-8.56	-3.86
13 a	2.95	-2.30	0.00	0.00	-7.27	-3.35
13 b	0.96	-0.82	0.00	0.00	-3.65	-1.67
14 top	1.11	-3.43	0.00	0.00	-6.54	-5.00
14 a	1.13	-2.96	0.00	0.00	-5.54	-4.27
14 b	1.21	-1.23	0.00	0.00	-2.94	-1.98

IV_A_HL93_tandem_EL.OUT 9/11/2009

VEH: HL93- TANDEM BRUG(5.75.44) page 61
date 11/09/2009; time 13:26:38
Cline Avenue - Load Rating - Double Box AND SINGLE BOX - 8

Summary of the results (Maximum)

Section	--- Deadload ---- Moment	Ax.Frc	----- P.T. ------ Moment	Ax.Frc	--- Live load --- Moment	Ax.Frc
1 a	-7.11	0.93	0.00	0.00	0.68	0.31
1 b	-11.90	1.76	0.00	0.00	0.12	0.09
1 right	-13.25	2.00	0.00	0.00	0.15	0.10
2 left	-4.24	3.03	0.00	0.00	-0.07	0.00
2 a	-3.44	2.86	0.00	0.00	-0.07	0.00
2 b	0.28	2.09	0.00	0.00	3.50	0.05
2 c	0.31	2.12	0.00	0.00	4.66	-0.43
2 right	-7.49	3.97	0.00	0.00	0.71	0.35
3 left	-7.66	3.95	0.00	0.00	0.81	0.33
3 a	-6.62	3.70	0.00	0.00	0.73	0.31
3 b	-0.89	2.27	0.00	0.00	3.54	0.15
3 c	0.31	1.93	0.00	0.00	4.86	-0.36
3 right	-4.13	2.68	0.00	0.00	0.04	0.14
4 left	-13.50	1.60	0.00	0.00	2.99	0.10
4 a	-12.07	1.33	0.00	0.00	2.80	0.09
4 b	-2.86	-0.27	0.00	0.00	4.15	0.12
4 c	1.82	-0.87	0.00	0.00	6.46	-0.36
4 right	-0.14	0.41	0.00	0.00	3.49	0.99
5 left	-3.67	-0.26	0.00	0.00	-0.25	0.14
5 a	-2.87	-0.41	0.00	0.00	0.18	0.90
5 b	0.96	-1.01	0.00	0.00	3.92	-0.69
5 c	1.16	-0.93	0.00	0.00	4.59	-0.91
5 right	-5.04	0.83	0.00	0.00	0.21	0.00
6 left	-6.15	0.86	0.00	0.00	0.22	0.03
6 a	-5.15	0.69	0.00	0.00	0.17	0.03
6 b	-1.52	0.15	0.00	0.00	0.58	0.09
7 a	-0.50	-0.73	0.00	0.00	0.93	-0.63
7 b	-0.04	-0.31	0.00	0.00	0.77	-0.24
7 c	0.93	1.39	0.00	0.00	0.05	0.13
8 a	-2.19	0.99	0.00	0.00	0.85	-0.47
8 b	-1.52	1.20	0.00	0.00	0.69	-0.19
8 c	0.93	1.39	0.00	0.00	0.04	-0.30
9 a	-1.45	0.88	0.00	0.00	0.61	-0.82
9 b	-0.89	1.15	0.00	0.00	0.45	-0.55
9 c	0.77	1.74	0.00	0.00	0.03	-0.16
10 top	-9.01	-3.82	0.00	0.00	5.81	-3.45
10 a	-8.15	-3.33	0.00	0.00	4.81	-3.88
10 b	-5.13	-1.49	0.00	0.00	2.39	-1.96
11 top	0.16	-3.66	0.00	0.00	8.35	-3.67
11 a	0.14	-3.07	0.00	0.00	7.04	-3.26
11 b	0.06	-0.88	0.00	0.00	3.31	-2.23
12 top	9.36	-3.96	0.00	0.00	11.55	-4.57
12 a	8.46	-3.45	0.00	0.00	9.82	-4.05
12 b	5.28	-1.55	0.00	0.00	4.85	-2.11
13 top	3.52	-2.69	0.00	0.00	10.69	-4.23
13 a	2.95	-2.30	0.00	0.00	9.18	-3.70
13 b	0.96	-0.82	0.00	0.00	4.69	-1.81
14 top	1.11	-3.43	0.00	0.00	2.18	-6.07
14 a	1.13	-2.96	0.00	0.00	1.82	-5.34
14 b	1.21	-1.23	0.00	0.00	0.76	-2.73

IV_A_HL93_tandem_EL.OUT 9/11/2009

VEH: HL93- TANDEM BRUG(5.75.44) page 62
date 11/09/2009; time 13:26:38
Cline Avenue - Load Rating - Double Box AND SINGLE BOX - 8

Summary of the results (Minimum)

Section	--- Deadload ---- Moment	Ax.Frc	----- P.T. ------ Moment	Ax.Frc	--- Live load --- Moment	Ax.Frc
1 a	-7.11	0.93	0.00	0.00	-6.83	0.46
1 b	-11.90	1.76	0.00	0.00	-12.66	1.24
1 right	-13.25	2.00	0.00	0.00	-15.49	1.56
2 left	-4.24	3.03	0.00	0.00	-10.11	1.64
2 a	-3.44	2.86	0.00	0.00	-7.53	0.75
2 b	0.28	2.09	0.00	0.00	-1.31	0.67
2 c	0.31	2.12	0.00	0.00	-0.79	0.70
2 right	-7.49	3.97	0.00	0.00	-11.54	1.00
3 left	-7.66	3.95	0.00	0.00	-10.99	1.19
3 a	-6.62	3.70	0.00	0.00	-9.19	0.60
3 b	-0.89	2.27	0.00	0.00	-1.47	-0.02
3 c	0.31	1.93	0.00	0.00	-0.65	0.47
3 right	-4.13	2.68	0.00	0.00	-9.30	1.32
4 left	-13.50	1.60	0.00	0.00	-14.98	0.19
4 a	-12.07	1.33	0.00	0.00	-13.42	0.07
4 b	-2.86	-0.27	0.00	0.00	-4.24	-0.47
4 c	1.82	-0.87	0.00	0.00	-0.34	-0.12
4 right	-0.14	0.41	0.00	0.00	-12.67	0.29
5 left	-3.67	-0.26	0.00	0.00	-9.18	0.53
5 a	-2.87	-0.41	0.00	0.00	-6.76	-0.24
5 b	0.96	-1.01	0.00	0.00	-1.18	-0.29
5 c	1.16	-0.93	0.00	0.00	-0.58	0.31
5 right	-5.04	0.83	0.00	0.00	-10.38	0.87
6 left	-6.15	0.86	0.00	0.00	-8.01	1.12
6 a	-5.15	0.69	0.00	0.00	-5.79	0.84
6 b	-1.52	0.15	0.00	0.00	-0.32	0.13
7 a	-0.50	-0.73	0.00	0.00	-0.49	0.25
7 b	-0.04	-0.31	0.00	0.00	-0.42	0.26
7 c	0.93	1.39	0.00	0.00	-0.04	1.23
8 a	-2.19	0.99	0.00	0.00	-0.66	0.64
8 b	-1.52	1.20	0.00	0.00	-0.57	0.62
8 c	0.93	1.39	0.00	0.00	-0.06	1.42
9 a	-1.45	0.88	0.00	0.00	-0.62	1.51
9 b	-0.89	1.15	0.00	0.00	-0.49	1.62
9 c	0.77	1.74	0.00	0.00	-0.07	1.70
10 top	-9.01	-3.82	0.00	0.00	-10.16	-6.25
10 a	-8.15	-3.33	0.00	0.00	-8.58	-5.51
10 b	-5.13	-1.49	0.00	0.00	-4.13	-2.87
11 top	0.16	-3.66	0.00	0.00	-9.28	-3.64
11 a	0.14	-3.07	0.00	0.00	-7.81	-3.23
11 b	0.06	-0.88	0.00	0.00	-3.56	-2.22
12 top	9.36	-3.96	0.00	0.00	-8.91	-3.23
12 a	8.46	-3.45	0.00	0.00	-7.61	-2.83
12 b	5.28	-1.55	0.00	0.00	-3.90	-1.82
13 top	3.52	-2.69	0.00	0.00	-8.61	-4.44
13 a	2.95	-2.30	0.00	0.00	-7.23	-3.93
13 b	0.96	-0.82	0.00	0.00	-3.45	-2.02
14 top	1.11	-3.43	0.00	0.00	-6.30	-4.70
14 a	1.13	-2.96	0.00	0.00	-5.32	-4.14
14 b	1.21	-1.23	0.00	0.00	-2.68	-2.13

VEH: R1 - TOLL ROAD BRUG(5.75.44) page 61
date 11/09/2009; time 13:26:39
Cline Avenue - Load Rating - Double Box AND SINGLE BOX - 8

Summary of the results (Maximum)

Section	--- Deadload ----		----- P.T. ------		--- Live load ---	
	Moment	Ax.Frc	Moment	Ax.Frc	Moment	Ax.Frc
1 a	-7.11	0.93	0.00	0.00	0.39	0.32
1 b	-11.90	1.76	0.00	0.00	0.07	0.21
1 right	-13.25	2.00	0.00	0.00	0.09	0.24
2 left	-4.24	3.03	0.00	0.00	0.42	2.04
2 a	-3.44	2.86	0.00	0.00	1.38	1.70
2 b	0.28	2.09	0.00	0.00	3.97	0.20
2 c	0.31	2.12	0.00	0.00	4.34	-0.45
2 right	-7.49	3.97	0.00	0.00	1.16	1.63
3 left	-7.66	3.95	0.00	0.00	1.47	1.74
3 a	-6.62	3.70	0.00	0.00	2.43	1.67
3 b	-0.89	2.27	0.00	0.00	3.64	0.33
3 c	0.31	1.93	0.00	0.00	4.71	-0.38
3 right	-4.13	2.68	0.00	0.00	1.49	1.53
4 left	-13.50	1.60	0.00	0.00	5.29	1.26
4 a	-12.07	1.33	0.00	0.00	5.42	1.11
4 b	-2.86	-0.27	0.00	0.00	5.02	0.27
4 c	1.82	-0.87	0.00	0.00	5.95	-0.30
4 right	-0.14	0.41	0.00	0.00	9.27	0.71
5 left	-3.67	-0.26	0.00	0.00	1.24	0.99
5 a	-2.87	-0.41	0.00	0.00	1.93	0.63
5 b	0.96	-1.01	0.00	0.00	4.40	-1.04
5 c	1.16	-0.93	0.00	0.00	4.63	-1.25
5 right	-5.04	0.83	0.00	0.00	0.10	0.01
6 left	-6.15	0.86	0.00	0.00	0.11	0.09
6 a	-5.15	0.69	0.00	0.00	0.09	0.07
6 b	-1.52	0.15	0.00	0.00	0.33	0.06
7 a	-0.50	-0.73	0.00	0.00	1.48	-1.13
7 b	-0.04	-0.31	0.00	0.00	1.27	-0.76
7 c	0.93	1.39	0.00	0.00	0.07	0.07
8 a	-2.19	0.99	0.00	0.00	1.34	-0.23
8 b	-1.52	1.20	0.00	0.00	1.14	-0.06
8 c	0.93	1.39	0.00	0.00	0.06	-0.76
9 a	-1.45	0.88	0.00	0.00	0.78	-0.92
9 b	-0.89	1.15	0.00	0.00	0.64	-0.69
9 c	0.77	1.74	0.00	0.00	0.05	-0.24
10 top	-9.01	-3.82	0.00	0.00	6.04	-3.17
10 a	-8.15	-3.33	0.00	0.00	5.27	-2.77
10 b	-5.13	-1.49	0.00	0.00	2.96	-1.41
11 top	0.16	-3.66	0.00	0.00	10.68	-3.43
11 a	0.14	-3.07	0.00	0.00	9.24	-3.03
11 b	0.06	-0.88	0.00	0.00	4.62	-1.63
12 top	9.36	-3.96	0.00	0.00	15.02	-3.40
12 a	8.46	-3.45	0.00	0.00	13.13	-3.02
12 b	5.28	-1.55	0.00	0.00	6.95	-1.67
13 top	3.52	-2.69	0.00	0.00	15.18	-2.49
13 a	2.95	-2.30	0.00	0.00	13.33	-2.14
13 b	0.96	-0.82	0.00	0.00	7.21	-0.95
14 top	1.11	-3.43	0.00	0.00	3.07	-4.29
14 a	1.13	-2.96	0.00	0.00	2.62	-3.75
14 b	1.21	-1.23	0.00	0.00	1.13	-1.92

VEH: R1 - TOLL ROAD BRUG(5.75.44) page 62
date 11/09/2009; time 13:26:39
Cline Avenue - Load Rating - Double Box AND SINGLE BOX - 8

Summary of the results (Minimum)

Section	--- Deadload ----		----- P.T. ------		--- Live load ---	
	Moment	Ax.Frc	Moment	Ax.Frc	Moment	Ax.Frc
1 a	-7.11	0.93	0.00	0.00	-6.55	0.48
1 b	-11.90	1.76	0.00	0.00	-11.65	1.05
1 right	-13.25	2.00	0.00	0.00	-13.85	1.28
2 left	-4.24	3.03	0.00	0.00	-7.19	0.07
2 a	-3.44	2.86	0.00	0.00	-6.06	-0.29
2 b	0.28	2.09	0.00	0.00	-1.26	-0.08
2 c	0.31	2.12	0.00	0.00	-1.12	1.04
2 right	-7.49	3.97	0.00	0.00	-11.45	-0.32
3 left	-7.66	3.95	0.00	0.00	-10.52	0.04
3 a	-6.62	3.70	0.00	0.00	-8.76	-0.05
3 b	-0.89	2.27	0.00	0.00	-1.83	0.19
3 c	0.31	1.93	0.00	0.00	-0.98	0.57
3 right	-4.13	2.68	0.00	0.00	-7.44	-0.25
4 left	-13.50	1.60	0.00	0.00	-16.12	0.05
4 a	-12.07	1.33	0.00	0.00	-14.51	-0.04
4 b	-2.86	-0.27	0.00	0.00	-5.46	-0.67
4 c	1.82	-0.87	0.00	0.00	-0.42	-0.56
4 right	-0.14	0.41	0.00	0.00	-11.89	0.21
5 left	-3.67	-0.26	0.00	0.00	-6.38	-1.48
5 a	-2.87	-0.41	0.00	0.00	-4.72	-1.03
5 b	0.96	-1.01	0.00	0.00	-1.05	0.55
5 c	1.16	-0.93	0.00	0.00	-0.79	0.42
5 right	-5.04	0.83	0.00	0.00	-8.27	-0.40
6 left	-6.15	0.86	0.00	0.00	-5.61	0.75
6 a	-5.15	0.69	0.00	0.00	-4.13	0.56
6 b	-1.52	0.15	0.00	0.00	-0.13	0.09
7 a	-0.50	-0.73	0.00	0.00	-0.82	0.46
7 b	-0.04	-0.31	0.00	0.00	-0.71	0.48
7 c	0.93	1.39	0.00	0.00	-0.06	1.48
8 a	-2.19	0.99	0.00	0.00	-1.10	0.88
8 b	-1.52	1.20	0.00	0.00	-0.95	0.82
8 c	0.93	1.39	0.00	0.00	-0.09	1.81
9 a	-1.45	0.88	0.00	0.00	-0.95	2.08
9 b	-0.89	1.15	0.00	0.00	-0.82	2.13
9 c	0.77	1.74	0.00	0.00	-0.11	1.96
10 top	-9.01	-3.82	0.00	0.00	-12.54	-4.45
10 a	-8.15	-3.33	0.00	0.00	-10.89	-3.90
10 b	-5.13	-1.49	0.00	0.00	-5.65	-2.05
11 top	0.16	-3.66	0.00	0.00	-12.45	-3.43
11 a	0.14	-3.07	0.00	0.00	-10.73	-3.02
11 b	0.06	-0.88	0.00	0.00	-5.08	-1.62
12 top	9.36	-3.96	0.00	0.00	-11.76	-2.71
12 a	8.46	-3.45	0.00	0.00	-10.33	-2.35
12 b	5.28	-1.55	0.00	0.00	-5.70	-1.13
13 top	3.52	-2.69	0.00	0.00	-9.71	-3.14
13 a	2.95	-2.30	0.00	0.00	-8.44	-2.77
13 b	0.96	-0.82	0.00	0.00	-4.43	-1.49
14 top	1.11	-3.43	0.00	0.00	-7.28	-3.58
14 a	1.13	-2.96	0.00	0.00	-6.38	-3.14
14 b	1.21	-1.23	0.00	0.00	-3.57	-1.62

VEH: R2 - TOLL ROAD BRUG(5.75.44) page 61
date 11/09/2009; time 13:26:40
Cline Avenue - Load Rating - Double Box AND SINGLE BOX - 8

Summary of the results (Maximum)

Section	--- Deadload ----		----- P.T. ------		--- Live load ---	
	Moment	Ax.Frc	Moment	Ax.Frc	Moment	Ax.Frc
1 a	-7.11	0.93	0.00	0.00	0.70	0.24
1 b	-11.90	1.76	0.00	0.00	0.04	0.21
1 right	-13.25	2.00	0.00	0.00	0.05	0.24
2 left	-4.24	3.03	0.00	0.00	0.80	1.79
2 a	-3.44	2.86	0.00	0.00	1.93	1.45
2 b	0.28	2.09	0.00	0.00	3.89	0.19
2 c	0.31	2.12	0.00	0.00	4.13	-0.39
2 right	-7.49	3.97	0.00	0.00	1.36	1.51
3 left	-7.66	3.95	0.00	0.00	2.16	1.55
3 a	-6.62	3.70	0.00	0.00	2.62	1.41
3 b	-0.89	2.27	0.00	0.00	3.56	0.30
3 c	0.31	1.93	0.00	0.00	4.50	-0.38
3 right	-4.13	2.68	0.00	0.00	1.75	1.37
4 left	-13.50	1.60	0.00	0.00	5.40	1.23
4 a	-12.07	1.33	0.00	0.00	5.60	1.02
4 b	-2.86	-0.27	0.00	0.00	4.95	0.24
4 c	1.82	-0.87	0.00	0.00	5.71	-0.24
4 right	-0.14	0.41	0.00	0.00	9.41	0.67
5 left	-3.67	-0.26	0.00	0.00	1.48	0.85
5 a	-2.87	-0.41	0.00	0.00	2.32	0.43
5 b	0.96	-1.01	0.00	0.00	4.19	-1.01
5 c	1.16	-0.93	0.00	0.00	4.39	-1.14
5 right	-5.04	0.83	0.00	0.00	0.08	0.02
6 left	-6.15	0.86	0.00	0.00	0.04	0.09
6 a	-5.15	0.69	0.00	0.00	0.03	0.08
6 b	-1.52	0.15	0.00	0.00	0.65	0.03
7 a	-0.50	-0.73	0.00	0.00	1.38	-1.06
7 b	-0.04	-0.31	0.00	0.00	1.19	-0.76
7 c	0.93	1.39	0.00	0.00	0.06	0.02
8 a	-2.19	0.99	0.00	0.00	1.26	-0.18
8 b	-1.52	1.20	0.00	0.00	1.08	-0.03
8 c	0.93	1.39	0.00	0.00	0.06	-0.73
9 a	-1.45	0.88	0.00	0.00	0.67	-0.72
9 b	-0.89	1.15	0.00	0.00	0.56	-0.55
9 c	0.77	1.74	0.00	0.00	0.04	-0.30
10 top	-9.01	-3.82	0.00	0.00	5.18	-1.34
10 a	-8.15	-3.33	0.00	0.00	4.52	-1.17
10 b	-5.13	-1.49	0.00	0.00	2.45	-1.25
11 top	0.16	-3.66	0.00	0.00	9.42	-3.48
11 a	0.14	-3.07	0.00	0.00	8.15	-2.97
11 b	0.06	-0.88	0.00	0.00	4.07	-1.43
12 top	9.36	-3.96	0.00	0.00	13.39	-3.06
12 a	8.46	-3.45	0.00	0.00	11.71	-2.67
12 b	5.28	-1.55	0.00	0.00	6.20	-1.41
13 top	3.52	-2.69	0.00	0.00	14.03	-2.74
13 a	2.95	-2.30	0.00	0.00	12.31	-2.23
13 b	0.96	-0.82	0.00	0.00	6.67	-0.80
14 top	1.11	-3.43	0.00	0.00	2.79	-4.75
14 a	1.13	-2.96	0.00	0.00	2.36	-3.98
14 b	1.21	-1.23	0.00	0.00	1.01	-1.76

VEH: R2 - TOLL ROAD BRUG(5.75.44) page 62
date 11/09/2009; time 13:26:40
Cline Avenue - Load Rating - Double Box AND SINGLE BOX - 8

Summary of the results (Minimum)

Section	--- Deadload ----		----- P.T. ------		--- Live load ---	
	Moment	Ax.Frc	Moment	Ax.Frc	Moment	Ax.Frc
1 a	-7.11	0.93	0.00	0.00	-5.48	0.34
1 b	-11.90	1.76	0.00	0.00	-9.39	0.83
1 right	-13.25	2.00	0.00	0.00	-11.61	1.10
2 left	-4.24	3.03	0.00	0.00	-6.00	0.08
2 a	-3.44	2.86	0.00	0.00	-5.20	-0.26
2 b	0.28	2.09	0.00	0.00	-1.21	-0.06
2 c	0.31	2.12	0.00	0.00	-0.95	0.90
2 right	-7.49	3.97	0.00	0.00	-9.95	-0.30
3 left	-7.66	3.95	0.00	0.00	-9.03	-0.03
3 a	-6.62	3.70	0.00	0.00	-7.59	-0.23
3 b	-0.89	2.27	0.00	0.00	-1.77	0.05
3 c	0.31	1.93	0.00	0.00	-0.91	0.56
3 right	-4.13	2.68	0.00	0.00	-6.20	-0.29
4 left	-13.50	1.60	0.00	0.00	-13.92	0.02
4 a	-12.07	1.33	0.00	0.00	-12.68	-0.37
4 b	-2.86	-0.27	0.00	0.00	-5.24	-0.58
4 c	1.82	-0.87	0.00	0.00	-0.38	-0.50
4 right	-0.14	0.41	0.00	0.00	-9.75	0.17
5 left	-3.67	-0.26	0.00	0.00	-5.26	-1.41
5 a	-2.87	-0.41	0.00	0.00	-3.82	-0.96
5 b	0.96	-1.01	0.00	0.00	-0.89	0.50
5 c	1.16	-0.93	0.00	0.00	-0.70	0.34
5 right	-5.04	0.83	0.00	0.00	-7.15	-0.31
6 left	-6.15	0.86	0.00	0.00	-4.95	0.70
6 a	-5.15	0.69	0.00	0.00	-3.44	0.47
6 b	-1.52	0.15	0.00	0.00	-0.09	0.06
7 a	-0.50	-0.73	0.00	0.00	-0.77	0.45
7 b	-0.04	-0.31	0.00	0.00	-0.67	0.46
7 c	0.93	1.39	0.00	0.00	-0.05	1.24
8 a	-2.19	0.99	0.00	0.00	-1.03	0.57
8 b	-1.52	1.20	0.00	0.00	-0.90	0.51
8 c	0.93	1.39	0.00	0.00	-0.08	1.56
9 a	-1.45	0.88	0.00	0.00	-0.89	1.90
9 b	-0.89	1.15	0.00	0.00	-0.77	1.91
9 c	0.77	1.74	0.00	0.00	-0.10	1.65
10 top	-9.01	-3.82	0.00	0.00	-10.95	-4.70
10 a	-8.15	-3.33	0.00	0.00	-9.47	-3.96
10 b	-5.13	-1.49	0.00	0.00	-4.91	-1.82
11 top	0.16	-3.66	0.00	0.00	-11.17	-3.48
11 a	0.14	-3.07	0.00	0.00	-9.61	-2.97
11 b	0.06	-0.88	0.00	0.00	-4.53	-1.42
12 top	9.36	-3.96	0.00	0.00	-10.66	-2.81
12 a	8.46	-3.45	0.00	0.00	-9.36	-2.34
12 b	5.28	-1.55	0.00	0.00	-5.16	-0.97
13 top	3.52	-2.69	0.00	0.00	-8.15	-2.81
13 a	2.95	-2.30	0.00	0.00	-7.08	-2.44
13 b	0.96	-0.82	0.00	0.00	-3.72	-1.24
14 top	1.11	-3.43	0.00	0.00	-6.31	-3.76
14 a	1.13	-2.96	0.00	0.00	-5.47	-3.18
14 b	1.21	-1.23	0.00	0.00	-3.06	-1.46

VEH: R3 - TOLL ROAD BRUG(5.75.44) page 61
date 11/09/2009; time 13:26:41
Cline Avenue - Load Rating - Double Box AND SINGLE BOX - 8

Summary of the results (Maximum)

Section	--- Deadload ----		----- P.T. ------		--- Live load ---	
	Moment	Ax.Frc	Moment	Ax.Frc	Moment	Ax.Frc
1 a	-7.11	0.93	0.00	0.00	0.50	0.21
1 b	-11.90	1.76	0.00	0.00	0.02	0.12
1 right	-13.25	2.00	0.00	0.00	0.03	0.14
2 left	-4.24	3.03	0.00	0.00	1.11	1.76
2 a	-3.44	2.86	0.00	0.00	2.08	1.47
2 b	0.28	2.09	0.00	0.00	3.87	0.17
2 c	0.31	2.12	0.00	0.00	3.91	-0.49
2 right	-7.49	3.97	0.00	0.00	1.38	1.28
3 left	-7.66	3.95	0.00	0.00	2.43	1.58
3 a	-6.62	3.70	0.00	0.00	2.86	1.46
3 b	-0.89	2.27	0.00	0.00	3.63	-0.02
3 c	0.31	1.93	0.00	0.00	4.40	-0.73
3 right	-4.13	2.68	0.00	0.00	1.87	1.12
4 left	-13.50	1.60	0.00	0.00	6.67	1.03
4 a	-12.07	1.33	0.00	0.00	6.84	0.89
4 b	-2.86	-0.27	0.00	0.00	5.52	0.25
4 c	1.82	-0.87	0.00	0.00	5.43	-0.31
4 right	-0.14	0.41	0.00	0.00	11.93	0.55
5 left	-3.67	-0.26	0.00	0.00	1.39	0.50
5 a	-2.87	-0.41	0.00	0.00	2.18	0.15
5 b	0.96	-1.01	0.00	0.00	4.38	-1.32
5 c	1.16	-0.93	0.00	0.00	4.40	-1.33
5 right	-5.04	0.83	0.00	0.00	0.12	0.04
6 left	-6.15	0.86	0.00	0.00	0.04	0.06
6 a	-5.15	0.69	0.00	0.00	0.02	0.05
6 b	-1.52	0.15	0.00	0.00	0.44	0.05
7 a	-0.50	-0.73	0.00	0.00	1.58	-1.16
7 b	-0.04	-0.31	0.00	0.00	1.36	-0.84
7 c	0.93	1.39	0.00	0.00	0.05	-0.06
8 a	-2.19	0.99	0.00	0.00	1.49	-0.23
8 b	-1.52	1.20	0.00	0.00	1.28	-0.04
8 c	0.93	1.39	0.00	0.00	0.06	-0.97
9 a	-1.45	0.88	0.00	0.00	0.65	-0.57
9 b	-0.89	1.15	0.00	0.00	0.52	-0.38
9 c	0.77	1.74	0.00	0.00	0.04	-0.34
10 top	-9.01	-3.82	0.00	0.00	5.42	-1.63
10 a	-8.15	-3.33	0.00	0.00	4.68	-1.44
10 b	-5.13	-1.49	0.00	0.00	2.42	-0.72
11 top	0.16	-3.66	0.00	0.00	10.07	-3.43
11 a	0.14	-3.07	0.00	0.00	8.63	-3.03
11 b	0.06	-0.88	0.00	0.00	4.21	-1.64
12 top	9.36	-3.96	0.00	0.00	15.13	-2.19
12 a	8.46	-3.45	0.00	0.00	13.27	-1.96
12 b	5.28	-1.55	0.00	0.00	7.07	-1.15
13 top	3.52	-2.69	0.00	0.00	16.50	-2.24
13 a	2.95	-2.30	0.00	0.00	14.42	-1.92
13 b	0.96	-0.82	0.00	0.00	7.74	-0.81
14 top	1.11	-3.43	0.00	0.00	2.83	-4.45
14 a	1.13	-2.96	0.00	0.00	2.40	-3.91
14 b	1.21	-1.23	0.00	0.00	1.00	-2.03

VEH: R3 - TOLL ROAD BRUG(5.75.44) page 62
date 11/09/2009; time 13:26:41
Cline Avenue - Load Rating - Double Box AND SINGLE BOX - 8

Summary of the results (Minimum)

Section	--- Deadload ----		----- P.T. ------		--- Live load ---	
	Moment	Ax.Frc	Moment	Ax.Frc	Moment	Ax.Frc
1 a	-7.11	0.93	0.00	0.00	-5.42	0.25
1 b	-11.90	1.76	0.00	0.00	-9.88	0.73
1 right	-13.25	2.00	0.00	0.00	-12.02	0.94
2 left	-4.24	3.03	0.00	0.00	-6.42	-0.27
2 a	-3.44	2.86	0.00	0.00	-5.81	-0.31
2 b	0.28	2.09	0.00	0.00	-1.45	-0.26
2 c	0.31	2.12	0.00	0.00	-0.84	0.82
2 right	-7.49	3.97	0.00	0.00	-10.63	-0.41
3 left	-7.66	3.95	0.00	0.00	-9.43	-0.27
3 a	-6.62	3.70	0.00	0.00	-8.33	-0.38
3 b	-0.89	2.27	0.00	0.00	-2.03	0.02
3 c	0.31	1.93	0.00	0.00	-1.03	0.69
3 right	-4.13	2.68	0.00	0.00	-6.60	-0.97
4 left	-13.50	1.60	0.00	0.00	-15.64	-0.32
4 a	-12.07	1.33	0.00	0.00	-14.62	-0.36
4 b	-2.86	-0.27	0.00	0.00	-6.59	-0.58
4 c	1.82	-0.87	0.00	0.00	-0.38	-0.47
4 right	-0.14	0.41	0.00	0.00	-10.11	0.02
5 left	-3.67	-0.26	0.00	0.00	-4.98	-1.75
5 a	-2.87	-0.41	0.00	0.00	-3.79	-1.09
5 b	0.96	-1.01	0.00	0.00	-0.92	0.52
5 c	1.16	-0.93	0.00	0.00	-0.71	0.36
5 right	-5.04	0.83	0.00	0.00	-7.61	-0.30
6 left	-6.15	0.86	0.00	0.00	-5.61	0.69
6 a	-5.15	0.69	0.00	0.00	-4.03	0.51
6 b	-1.52	0.15	0.00	0.00	-0.14	0.08
7 a	-0.50	-0.73	0.00	0.00	-0.87	0.53
7 b	-0.04	-0.31	0.00	0.00	-0.76	0.55
7 c	0.93	1.39	0.00	0.00	-0.05	1.24
8 a	-2.19	0.99	0.00	0.00	-1.18	0.40
8 b	-1.52	1.20	0.00	0.00	-1.02	0.34
8 c	0.93	1.39	0.00	0.00	-0.08	1.67
9 a	-1.45	0.88	0.00	0.00	-1.05	2.21
9 b	-0.89	1.15	0.00	0.00	-0.90	2.19
9 c	0.77	1.74	0.00	0.00	-0.11	1.72
10 top	-9.01	-3.82	0.00	0.00	-11.36	-4.37
10 a	-8.15	-3.33	0.00	0.00	-9.77	-3.84
10 b	-5.13	-1.49	0.00	0.00	-4.90	-2.03
11 top	0.16	-3.66	0.00	0.00	-12.33	-3.42
11 a	0.14	-3.07	0.00	0.00	-10.53	-3.03
11 b	0.06	-0.88	0.00	0.00	-4.81	-1.63
12 top	9.36	-3.96	0.00	0.00	-12.57	-1.02
12 a	8.46	-3.45	0.00	0.00	-11.00	-0.88
12 b	5.28	-1.55	0.00	0.00	-5.84	-1.08
13 top	3.52	-2.69	0.00	0.00	-8.14	-1.87
13 a	2.95	-2.30	0.00	0.00	-7.10	-1.67
13 b	0.96	-0.82	0.00	0.00	-3.77	-0.94
14 top	1.11	-3.43	0.00	0.00	-6.34	-1.90
14 a	1.13	-2.96	0.00	0.00	-5.51	-1.68
14 b	1.21	-1.23	0.00	0.00	-3.00	-1.68

VEH: R4 - MICHIGAN T BRUG(5.75.44) page 61
date 11/09/2009; time 13:26:41
Cline Avenue - Load Rating - Double Box AND SINGLE BOX - 8

Summary of the results (Maximum)

Section	--- Deadload ----		----- P.T. ------		--- Live load ---	
	Moment	Ax.Frc	Moment	Ax.Frc	Moment	Ax.Frc
1 a	-7.11	0.93	0.00	0.00	0.51	0.25
1 b	-11.90	1.76	0.00	0.00	0.24	0.43
1 right	-13.25	2.00	0.00	0.00	0.04	0.48
2 left	-4.24	3.03	0.00	0.00	2.70	1.91
2 a	-3.44	2.86	0.00	0.00	3.41	1.58
2 b	0.28	2.09	0.00	0.00	4.38	0.28
2 c	0.31	2.12	0.00	0.00	4.01	-0.45
2 right	-7.49	3.97	0.00	0.00	2.79	1.55
3 left	-7.66	3.95	0.00	0.00	3.99	1.54
3 a	-6.62	3.70	0.00	0.00	4.11	1.40
3 b	-0.89	2.27	0.00	0.00	3.82	0.34
3 c	0.31	1.93	0.00	0.00	4.55	-0.55
3 right	-4.13	2.68	0.00	0.00	3.54	2.33
4 left	-13.50	1.60	0.00	0.00	8.60	1.20
4 a	-12.07	1.33	0.00	0.00	8.46	1.03
4 b	-2.86	-0.27	0.00	0.00	6.06	0.53
4 c	1.82	-0.87	0.00	0.00	5.52	-0.22
4 right	-0.14	0.41	0.00	0.00	14.65	0.46
5 left	-3.67	-0.26	0.00	0.00	2.96	0.39
5 a	-2.87	-0.41	0.00	0.00	3.56	0.07
5 b	0.96	-1.01	0.00	0.00	4.78	-1.42
5 c	1.16	-0.93	0.00	0.00	4.61	-1.47
5 right	-5.04	0.83	0.00	0.00	0.11	0.03
6 left	-6.15	0.86	0.00	0.00	0.06	0.34
6 a	-5.15	0.69	0.00	0.00	0.25	0.20
6 b	-1.52	0.15	0.00	0.00	0.47	0.02
7 a	-0.50	-0.73	0.00	0.00	1.88	-1.46
7 b	-0.04	-0.31	0.00	0.00	1.64	-1.16
7 c	0.93	1.39	0.00	0.00	0.07	-0.06
8 a	-2.19	0.99	0.00	0.00	1.73	-0.13
8 b	-1.52	1.20	0.00	0.00	1.51	0.04
8 c	0.93	1.39	0.00	0.00	0.08	-1.09
9 a	-1.45	0.88	0.00	0.00	0.80	-0.73
9 b	-0.89	1.15	0.00	0.00	0.69	-0.57
9 c	0.77	1.74	0.00	0.00	0.05	-0.40
10 top	-9.01	-3.82	0.00	0.00	6.11	-1.23
10 a	-8.15	-3.33	0.00	0.00	5.39	-1.08
10 b	-5.13	-1.49	0.00	0.00	2.94	-0.54
11 top	0.16	-3.66	0.00	0.00	11.45	-2.89
11 a	0.14	-3.07	0.00	0.00	9.97	-2.46
11 b	0.06	-0.88	0.00	0.00	5.09	-1.20
12 top	9.36	-3.96	0.00	0.00	17.25	-1.96
12 a	8.46	-3.45	0.00	0.00	15.25	-1.77
12 b	5.28	-1.55	0.00	0.00	8.28	-1.07
13 top	3.52	-2.69	0.00	0.00	18.53	-1.61
13 a	2.95	-2.30	0.00	0.00	16.34	-1.24
13 b	0.96	-0.82	0.00	0.00	8.98	-0.28
14 top	1.11	-3.43	0.00	0.00	3.50	-3.76
14 a	1.13	-2.96	0.00	0.00	2.99	-3.13
14 b	1.21	-1.23	0.00	0.00	1.29	-1.41

VEH: R4 - MICHIGAN T BRUG(5.75.44) page 62
date 11/09/2009; time 13:26:41
Cline Avenue - Load Rating - Double Box AND SINGLE BOX - 8

Summary of the results (Minimum)

Section	--- Deadload ----		----- P.T. ------		--- Live load ---	
	Moment	Ax.Frc	Moment	Ax.Frc	Moment	Ax.Frc
1 a	-7.11	0.93	0.00	0.00	-5.41	0.31
1 b	-11.90	1.76	0.00	0.00	-9.15	0.60
1 right	-13.25	2.00	0.00	0.00	-11.05	0.68
2 left	-4.24	3.03	0.00	0.00	-6.26	-0.33
2 a	-3.44	2.86	0.00	0.00	-5.61	-0.35
2 b	0.28	2.09	0.00	0.00	-1.68	-0.01
2 c	0.31	2.12	0.00	0.00	-1.12	1.10
2 right	-7.49	3.97	0.00	0.00	-10.97	-0.48
3 left	-7.66	3.95	0.00	0.00	-9.75	-0.34
3 a	-6.62	3.70	0.00	0.00	-8.85	-0.34
3 b	-0.89	2.27	0.00	0.00	-2.22	0.45
3 c	0.31	1.93	0.00	0.00	-1.22	0.83
3 right	-4.13	2.68	0.00	0.00	-6.54	-1.05
4 left	-13.50	1.60	0.00	0.00	-17.19	-0.52
4 a	-12.07	1.33	0.00	0.00	-16.03	-0.49
4 b	-2.86	-0.27	0.00	0.00	-7.43	-0.79
4 c	1.82	-0.87	0.00	0.00	-0.48	-0.64
4 right	-0.14	0.41	0.00	0.00	-10.96	0.02
5 left	-3.67	-0.26	0.00	0.00	-4.46	-2.21
5 a	-2.87	-0.41	0.00	0.00	-3.36	-1.37
5 b	0.96	-1.01	0.00	0.00	-1.08	0.60
5 c	1.16	-0.93	0.00	0.00	-0.89	0.46
5 right	-5.04	0.83	0.00	0.00	-7.83	-0.67
6 left	-6.15	0.86	0.00	0.00	-3.92	0.49
6 a	-5.15	0.69	0.00	0.00	-2.76	0.32
6 b	-1.52	0.15	0.00	0.00	-0.01	0.04
7 a	-0.50	-0.73	0.00	0.00	-1.07	0.64
7 b	-0.04	-0.31	0.00	0.00	-0.92	0.66
7 c	0.93	1.39	0.00	0.00	-0.06	1.41
8 a	-2.19	0.99	0.00	0.00	-1.43	0.62
8 b	-1.52	1.20	0.00	0.00	-1.24	0.53
8 c	0.93	1.39	0.00	0.00	-0.10	1.89
9 a	-1.45	0.88	0.00	0.00	-1.22	2.46
9 b	-0.89	1.15	0.00	0.00	-1.07	2.42
9 c	0.77	1.74	0.00	0.00	-0.13	1.88
10 top	-9.01	-3.82	0.00	0.00	-13.01	-3.68
10 a	-8.15	-3.33	0.00	0.00	-11.34	-3.09
10 b	-5.13	-1.49	0.00	0.00	-5.99	-1.45
11 top	0.16	-3.66	0.00	0.00	-14.02	-2.89
11 a	0.14	-3.07	0.00	0.00	-12.13	-2.46
11 b	0.06	-0.88	0.00	0.00	-5.77	-1.19
12 top	9.36	-3.96	0.00	0.00	-14.05	-0.54
12 a	8.46	-3.45	0.00	0.00	-12.41	-0.45
12 b	5.28	-1.55	0.00	0.00	-6.76	-0.61
13 top	3.52	-2.69	0.00	0.00	-9.41	-1.60
13 a	2.95	-2.30	0.00	0.00	-8.33	-1.43
13 b	0.96	-0.82	0.00	0.00	-4.58	-0.83
14 top	1.11	-3.43	0.00	0.00	-7.63	-2.22
14 a	1.13	-2.96	0.00	0.00	-6.74	-1.92
14 b	1.21	-1.23	0.00	0.00	-3.67	-1.30

IV_A_R5_EL.OUT 9/11/2009

VEH: R5 - MICHIGAN T BRUG(5.75.44) page 61
date 11/09/2009; time 13:26:42
Cline Avenue - Load Rating - Double Box AND SINGLE BOX - 8

Summary of the results (Maximum)

Section	--- Deadload ---- Moment	Ax.Frc	----- P.T. ------ Moment	Ax.Frc	--- Live load --- Moment	Ax.Frc
1 a	-7.11	0.93	0.00	0.00	0.11	0.35
1 b	-11.90	1.76	0.00	0.00	0.04	0.31
1 right	-13.25	2.00	0.00	0.00	0.05	0.35
2 left	-4.24	3.03	0.00	0.00	1.89	2.18
2 a	-3.44	2.86	0.00	0.00	2.47	1.88
2 b	0.28	2.09	0.00	0.00	4.53	0.28
2 c	0.31	2.12	0.00	0.00	4.40	-0.55
2 right	-7.49	3.97	0.00	0.00	2.17	1.71
3 left	-7.66	3.95	0.00	0.00	3.36	1.93
3 a	-6.62	3.70	0.00	0.00	3.56	1.85
3 b	-0.89	2.27	0.00	0.00	3.99	0.42
3 c	0.31	1.93	0.00	0.00	4.94	-0.60
3 right	-4.13	2.68	0.00	0.00	2.78	1.49
4 left	-13.50	1.60	0.00	0.00	8.14	1.33
4 a	-12.07	1.33	0.00	0.00	7.99	1.23
4 b	-2.86	-0.27	0.00	0.00	6.08	0.38
4 c	1.82	-0.87	0.00	0.00	6.02	-0.33
4 right	-0.14	0.41	0.00	0.00	14.10	0.55
5 left	-3.67	-0.26	0.00	0.00	2.38	0.54
5 a	-2.87	-0.41	0.00	0.00	2.83	0.38
5 b	0.96	-1.01	0.00	0.00	5.11	-1.47
5 c	1.16	-0.93	0.00	0.00	5.02	-1.62
5 right	-5.04	0.83	0.00	0.00	0.11	0.03
6 left	-6.15	0.86	0.00	0.00	0.05	0.10
6 a	-5.15	0.69	0.00	0.00	0.03	0.08
6 b	-1.52	0.15	0.00	0.00	0.08	0.07
7 a	-0.50	-0.73	0.00	0.00	1.98	-1.52
7 b	-0.04	-0.31	0.00	0.00	1.71	-1.11
7 c	0.93	1.39	0.00	0.00	0.08	0.00
8 a	-2.19	0.99	0.00	0.00	1.82	-0.25
8 b	-1.52	1.20	0.00	0.00	1.57	-0.03
8 c	0.93	1.39	0.00	0.00	0.08	-1.08
9 a	-1.45	0.88	0.00	0.00	0.93	-0.96
9 b	-0.89	1.15	0.00	0.00	0.77	-0.72
9 c	0.77	1.74	0.00	0.00	0.06	-0.42
10 top	-9.01	-3.82	0.00	0.00	7.13	-1.62
10 a	-8.15	-3.33	0.00	0.00	6.26	-1.44
10 b	-5.13	-1.49	0.00	0.00	3.35	-0.75
11 top	0.16	-3.66	0.00	0.00	12.98	-3.05
11 a	0.14	-3.07	0.00	0.00	11.32	-2.75
11 b	0.06	-0.88	0.00	0.00	5.70	-1.61
12 top	9.36	-3.96	0.00	0.00	18.75	-3.37
12 a	8.46	-3.45	0.00	0.00	16.48	-3.03
12 b	5.28	-1.55	0.00	0.00	8.81	-1.34
13 top	3.52	-2.69	0.00	0.00	19.89	-1.50
13 a	2.95	-2.30	0.00	0.00	17.56	-1.32
13 b	0.96	-0.82	0.00	0.00	9.58	-0.60
14 top	1.11	-3.43	0.00	0.00	3.79	-3.35
14 a	1.13	-2.96	0.00	0.00	3.25	-3.02
14 b	1.21	-1.23	0.00	0.00	1.41	-1.76

IV_A_R5_EL.OUT 9/11/2009

VEH: R5 - MICHIGAN T BRUG(5.75.44) page 62
date 11/09/2009; time 13:26:42
Cline Avenue - Load Rating - Double Box AND SINGLE BOX - 8

Summary of the results (Minimum)

Section	--- Deadload ---- Moment	Ax.Frc	----- P.T. ------ Moment	Ax.Frc	--- Live load --- Moment	Ax.Frc
1 a	-7.11	0.93	0.00	0.00	-6.96	0.48
1 b	-11.90	1.76	0.00	0.00	-12.54	0.97
1 right	-13.25	2.00	0.00	0.00	-14.52	1.13
2 left	-4.24	3.03	0.00	0.00	-7.78	-0.34
2 a	-3.44	2.86	0.00	0.00	-6.98	-0.38
2 b	0.28	2.09	0.00	0.00	-1.69	0.04
2 c	0.31	2.12	0.00	0.00	-1.29	1.23
2 right	-7.49	3.97	0.00	0.00	-13.10	-0.56
3 left	-7.66	3.95	0.00	0.00	-11.73	-0.18
3 a	-6.62	3.70	0.00	0.00	-10.38	-0.35
3 b	-0.89	2.27	0.00	0.00	-2.24	0.47
3 c	0.31	1.93	0.00	0.00	-1.29	0.85
3 right	-4.13	2.68	0.00	0.00	-8.08	-1.05
4 left	-13.50	1.60	0.00	0.00	-19.25	-0.47
4 a	-12.07	1.33	0.00	0.00	-17.94	-0.52
4 b	-2.86	-0.27	0.00	0.00	-7.65	-0.83
4 c	1.82	-0.87	0.00	0.00	-0.52	-0.70
4 right	-0.14	0.41	0.00	0.00	-12.98	0.02
5 left	-3.67	-0.26	0.00	0.00	-6.23	-2.20
5 a	-2.87	-0.41	0.00	0.00	-4.83	-1.38
5 b	0.96	-1.01	0.00	0.00	-1.24	0.68
5 c	1.16	-0.93	0.00	0.00	-0.97	0.49
5 right	-5.04	0.83	0.00	0.00	-9.09	-0.78
6 left	-6.15	0.86	0.00	0.00	-5.34	0.63
6 a	-5.15	0.69	0.00	0.00	-4.10	0.50
6 b	-1.52	0.15	0.00	0.00	-0.11	0.08
7 a	-0.50	-0.73	0.00	0.00	-1.11	0.65
7 b	-0.04	-0.31	0.00	0.00	-0.96	0.67
7 c	0.93	1.39	0.00	0.00	-0.07	1.71
8 a	-2.19	0.99	0.00	0.00	-1.49	0.75
8 b	-1.52	1.20	0.00	0.00	-1.29	0.66
8 c	0.93	1.39	0.00	0.00	-0.11	2.19
9 a	-1.45	0.88	0.00	0.00	-1.29	2.71
9 b	-0.89	1.15	0.00	0.00	-1.11	2.71
9 c	0.77	1.74	0.00	0.00	-0.14	2.30
10 top	-9.01	-3.82	0.00	0.00	-14.87	-3.60
10 a	-8.15	-3.33	0.00	0.00	-13.03	-3.24
10 b	-5.13	-1.49	0.00	0.00	-6.82	-1.90
11 top	0.16	-3.66	0.00	0.00	-15.56	-3.04
11 a	0.14	-3.07	0.00	0.00	-13.48	-2.74
11 b	0.06	-0.88	0.00	0.00	-6.39	-1.59
12 top	9.36	-3.96	0.00	0.00	-15.11	-0.95
12 a	8.46	-3.45	0.00	0.00	-13.32	-0.82
12 b	5.28	-1.55	0.00	0.00	-7.37	-0.95
13 top	3.52	-2.69	0.00	0.00	-10.99	-2.99
13 a	2.95	-2.30	0.00	0.00	-9.62	-2.68
13 b	0.96	-0.82	0.00	0.00	-5.08	-1.53
14 top	1.11	-3.43	0.00	0.00	-8.51	-1.95
14 a	1.13	-2.96	0.00	0.00	-7.49	-1.74
14 b	1.21	-1.23	0.00	0.00	-4.24	-1.62

VEH: S1 - SPECIAL TR BRUG(5.75.44) page 61
date 11/09/2009; time 13:26:43
Cline Avenue - Load Rating - Double Box AND SINGLE BOX - 8

Summary of the results (Maximum)

Section	--- Deadload ----		----- P.T. ------		--- Live load ---	
	Moment	Ax.Frc	Moment	Ax.Frc	Moment	Ax.Frc
1 a	-7.11	0.93	0.00	0.00	0.60	0.28
1 b	-11.90	1.76	0.00	0.00	0.03	0.16
1 right	-13.25	2.00	0.00	0.00	0.04	0.19
2 left	-4.24	3.03	0.00	0.00	2.17	2.39
2 a	-3.44	2.86	0.00	0.00	3.32	2.02
2 b	0.28	2.09	0.00	0.00	5.35	0.27
2 c	0.31	2.12	0.00	0.00	5.19	-0.76
2 right	-7.49	3.97	0.00	0.00	2.30	1.45
3 left	-7.66	3.95	0.00	0.00	4.00	2.15
3 a	-6.62	3.70	0.00	0.00	4.53	1.74
3 b	-0.89	2.27	0.00	0.00	5.17	-0.26
3 c	0.31	1.93	0.00	0.00	5.97	-1.40
3 right	-4.13	2.68	0.00	0.00	3.04	1.30
4 left	-13.50	1.60	0.00	0.00	10.89	1.18
4 a	-12.07	1.33	0.00	0.00	10.96	0.99
4 b	-2.86	-0.27	0.00	0.00	8.17	0.10
4 c	1.82	-0.87	0.00	0.00	7.26	-0.53
4 right	-0.14	0.41	0.00	0.00	19.42	0.65
5 left	-3.67	-0.26	0.00	0.00	2.19	0.45
5 a	-2.87	-0.41	0.00	0.00	3.20	-0.02
5 b	0.96	-1.01	0.00	0.00	6.18	-2.03
5 c	1.16	-0.93	0.00	0.00	6.09	-1.97
5 right	-5.04	0.83	0.00	0.00	0.19	0.07
6 left	-6.15	0.86	0.00	0.00	0.05	0.07
6 a	-5.15	0.69	0.00	0.00	0.03	0.06
6 b	-1.52	0.15	0.00	0.00	0.53	0.06
7 a	-0.50	-0.73	0.00	0.00	2.29	-1.68
7 b	-0.04	-0.31	0.00	0.00	1.98	-1.26
7 c	0.93	1.39	0.00	0.00	0.07	-0.14
8 a	-2.19	0.99	0.00	0.00	2.23	-0.26
8 b	-1.52	1.20	0.00	0.00	1.91	0.02
8 c	0.93	1.39	0.00	0.00	0.10	-1.54
9 a	-1.45	0.88	0.00	0.00	0.84	-1.23
9 b	-0.89	1.15	0.00	0.00	0.69	-1.04
9 c	0.77	1.74	0.00	0.00	0.06	-0.51
10 top	-9.01	-3.82	0.00	0.00	7.63	-2.18
10 a	-8.15	-3.33	0.00	0.00	6.61	-1.92
10 b	-5.13	-1.49	0.00	0.00	3.43	-0.98
11 top	0.16	-3.66	0.00	0.00	13.93	-4.39
11 a	0.14	-3.07	0.00	0.00	12.00	-3.89
11 b	0.06	-0.88	0.00	0.00	5.90	-2.13
12 top	9.36	-3.96	0.00	0.00	22.87	-3.07
12 a	8.46	-3.45	0.00	0.00	20.13	-2.49
12 b	5.28	-1.55	0.00	0.00	10.75	-1.61
13 top	3.52	-2.69	0.00	0.00	24.79	-2.41
13 a	2.95	-2.30	0.00	0.00	21.75	-2.05
13 b	0.96	-0.82	0.00	0.00	11.74	-0.82
14 top	1.11	-3.43	0.00	0.00	3.72	-5.68
14 a	1.13	-2.96	0.00	0.00	3.15	-4.99
14 b	1.21	-1.23	0.00	0.00	1.29	-2.63

VEH: S1 - SPECIAL TR BRUG(5.75.44) page 62
date 11/09/2009; time 13:26:43
Cline Avenue - Load Rating - Double Box AND SINGLE BOX - 8

Summary of the results (Minimum)

Section	--- Deadload ----		----- P.T. ------		--- Live load ---	
	Moment	Ax.Frc	Moment	Ax.Frc	Moment	Ax.Frc
1 a	-7.11	0.93	0.00	0.00	-7.20	0.33
1 b	-11.90	1.76	0.00	0.00	-13.12	0.92
1 right	-13.25	2.00	0.00	0.00	-15.89	1.18
2 left	-4.24	3.03	0.00	0.00	-8.87	-0.45
2 a	-3.44	2.86	0.00	0.00	-8.02	-0.51
2 b	0.28	2.09	0.00	0.00	-2.06	-0.52
2 c	0.31	2.12	0.00	0.00	-1.15	1.12
2 right	-7.49	3.97	0.00	0.00	-14.50	-0.66
3 left	-7.66	3.95	0.00	0.00	-12.59	-0.72
3 a	-6.62	3.70	0.00	0.00	-11.47	-0.76
3 b	-0.89	2.27	0.00	0.00	-2.86	-0.15
3 c	0.31	1.93	0.00	0.00	-1.61	1.25
3 right	-4.13	2.68	0.00	0.00	-9.16	-1.71
4 left	-13.50	1.60	0.00	0.00	-23.24	-0.47
4 a	-12.07	1.33	0.00	0.00	-21.83	-0.52
4 b	-2.86	-0.27	0.00	0.00	-10.31	-0.68
4 c	1.82	-0.87	0.00	0.00	-0.56	-0.57
4 right	-0.14	0.41	0.00	0.00	-14.29	-0.04
5 left	-3.67	-0.26	0.00	0.00	-5.90	-2.78
5 a	-2.87	-0.41	0.00	0.00	-4.69	-1.67
5 b	0.96	-1.01	0.00	0.00	-1.41	0.76
5 c	1.16	-0.93	0.00	0.00	-1.08	0.55
5 right	-5.04	0.83	0.00	0.00	-10.14	-0.46
6 left	-6.15	0.86	0.00	0.00	-7.23	0.86
6 a	-5.15	0.69	0.00	0.00	-5.22	0.63
6 b	-1.52	0.15	0.00	0.00	-0.17	0.07
7 a	-0.50	-0.73	0.00	0.00	-1.26	0.78
7 b	-0.04	-0.31	0.00	0.00	-1.10	0.81
7 c	0.93	1.39	0.00	0.00	-0.07	1.76
8 a	-2.19	0.99	0.00	0.00	-1.73	0.46
8 b	-1.52	1.20	0.00	0.00	-1.50	0.36
8 c	0.93	1.39	0.00	0.00	-0.12	2.45
9 a	-1.45	0.88	0.00	0.00	-1.57	3.30
9 b	-0.89	1.15	0.00	0.00	-1.35	3.24
9 c	0.77	1.74	0.00	0.00	-0.16	2.44
10 top	-9.01	-3.82	0.00	0.00	-15.82	-5.50
10 a	-8.15	-3.33	0.00	0.00	-13.66	-4.86
10 b	-5.13	-1.49	0.00	0.00	-6.88	-2.60
11 top	0.16	-3.66	0.00	0.00	-17.55	-4.39
11 a	0.14	-3.07	0.00	0.00	-15.03	-3.89
11 b	0.06	-0.88	0.00	0.00	-6.87	-2.12
12 top	9.36	-3.96	0.00	0.00	-19.12	-1.20
12 a	8.46	-3.45	0.00	0.00	-16.77	-1.02
12 b	5.28	-1.55	0.00	0.00	-8.92	-0.40
13 top	3.52	-2.69	0.00	0.00	-11.56	-2.56
13 a	2.95	-2.30	0.00	0.00	-10.14	-2.01
13 b	0.96	-0.82	0.00	0.00	-5.41	-1.26
14 top	1.11	-3.43	0.00	0.00	-8.58	-2.53
14 a	1.13	-2.96	0.00	0.00	-7.50	-2.24
14 b	1.21	-1.23	0.00	0.00	-4.17	-2.23

VEH: S2 - SPECIAL TR BRUG(5.75.44) page 61
date 11/09/2009; time 13:26:43
Cline Avenue - Load Rating - Double Box AND SINGLE BOX - 8

Summary of the results (Maximum)

Section	--- Deadload ---- Moment	Ax.Frc	----- P.T. ------ Moment	Ax.Frc	--- Live load --- Moment	Ax.Frc
1 a	-7.11	0.93	0.00	0.00	0.47	0.29
1 b	-11.90	1.76	0.00	0.00	0.05	0.15
1 right	-13.25	2.00	0.00	0.00	0.06	0.18
2 left	-4.24	3.03	0.00	0.00	2.46	2.31
2 a	-3.44	2.86	0.00	0.00	3.41	1.96
2 b	0.28	2.09	0.00	0.00	5.18	0.27
2 c	0.31	2.12	0.00	0.00	4.93	-0.77
2 right	-7.49	3.97	0.00	0.00	2.52	1.35
3 left	-7.66	3.95	0.00	0.00	4.22	2.04
3 a	-6.62	3.70	0.00	0.00	4.58	1.66
3 b	-0.89	2.27	0.00	0.00	4.93	-0.27
3 c	0.31	1.93	0.00	0.00	5.71	-1.43
3 right	-4.13	2.68	0.00	0.00	3.24	1.22
4 left	-13.50	1.60	0.00	0.00	11.11	1.08
4 a	-12.07	1.33	0.00	0.00	11.02	0.91
4 b	-2.86	-0.27	0.00	0.00	7.93	0.09
4 c	1.82	-0.87	0.00	0.00	6.90	-0.57
4 right	-0.14	0.41	0.00	0.00	19.61	0.59
5 left	-3.67	-0.26	0.00	0.00	2.37	0.38
5 a	-2.87	-0.41	0.00	0.00	3.24	-0.07
5 b	0.96	-1.01	0.00	0.00	5.99	-2.01
5 c	1.16	-0.93	0.00	0.00	5.86	-1.96
5 right	-5.04	0.83	0.00	0.00	0.19	0.07
6 left	-6.15	0.86	0.00	0.00	0.08	0.06
6 a	-5.15	0.69	0.00	0.00	0.06	0.05
6 b	-1.52	0.15	0.00	0.00	0.42	0.06
7 a	-0.50	-0.73	0.00	0.00	2.26	-1.68
7 b	-0.04	-0.31	0.00	0.00	1.96	-1.27
7 c	0.93	1.39	0.00	0.00	0.07	-0.14
8 a	-2.19	0.99	0.00	0.00	2.21	-0.24
8 b	-1.52	1.20	0.00	0.00	1.90	0.02
8 c	0.93	1.39	0.00	0.00	0.10	-1.53
9 a	-1.45	0.88	0.00	0.00	0.82	-1.25
9 b	-0.89	1.15	0.00	0.00	0.68	-1.04
9 c	0.77	1.74	0.00	0.00	0.06	-0.51
10 top	-9.01	-3.82	0.00	0.00	7.51	-1.94
10 a	-8.15	-3.33	0.00	0.00	6.54	-1.71
10 b	-5.13	-1.49	0.00	0.00	3.43	-0.88
11 top	0.16	-3.66	0.00	0.00	13.67	-3.87
11 a	0.14	-3.07	0.00	0.00	11.82	-3.42
11 b	0.06	-0.88	0.00	0.00	5.87	-1.88
12 top	9.36	-3.96	0.00	0.00	22.75	-2.67
12 a	8.46	-3.45	0.00	0.00	20.05	-2.41
12 b	5.28	-1.55	0.00	0.00	10.72	-1.55
13 top	3.52	-2.69	0.00	0.00	24.52	-1.85
13 a	2.95	-2.30	0.00	0.00	21.56	-1.55
13 b	0.96	-0.82	0.00	0.00	11.70	-0.55
14 top	1.11	-3.43	0.00	0.00	3.60	-4.87
14 a	1.13	-2.96	0.00	0.00	3.06	-4.26
14 b	1.21	-1.23	0.00	0.00	1.26	-2.23

VEH: S2 - SPECIAL TR BRUG(5.75.44) page 62
date 11/09/2009; time 13:26:43
Cline Avenue - Load Rating - Double Box AND SINGLE BOX - 8

Summary of the results (Minimum)

Section	--- Deadload ---- Moment	Ax.Frc	----- P.T. ------ Moment	Ax.Frc	--- Live load --- Moment	Ax.Frc
1 a	-7.11	0.93	0.00	0.00	-7.00	0.35
1 b	-11.90	1.76	0.00	0.00	-12.60	0.88
1 right	-13.25	2.00	0.00	0.00	-15.07	1.10
2 left	-4.24	3.03	0.00	0.00	-8.55	-0.46
2 a	-3.44	2.86	0.00	0.00	-7.73	-0.52
2 b	0.28	2.09	0.00	0.00	-1.94	-0.49
2 c	0.31	2.12	0.00	0.00	-1.14	1.11
2 right	-7.49	3.97	0.00	0.00	-14.13	-0.42
3 left	-7.66	3.95	0.00	0.00	-12.23	-0.75
3 a	-6.62	3.70	0.00	0.00	-11.13	-0.78
3 b	-0.89	2.27	0.00	0.00	-2.71	-0.18
3 c	0.31	1.93	0.00	0.00	-1.60	1.27
3 right	-4.13	2.68	0.00	0.00	-8.86	-1.73
4 left	-13.50	1.60	0.00	0.00	-23.11	-0.46
4 a	-12.07	1.33	0.00	0.00	-21.70	-0.51
4 b	-2.86	-0.27	0.00	0.00	-10.25	-0.64
4 c	1.82	-0.87	0.00	0.00	-0.56	-0.54
4 right	-0.14	0.41	0.00	0.00	-14.16	-0.07
5 left	-3.67	-0.26	0.00	0.00	-5.42	-2.79
5 a	-2.87	-0.41	0.00	0.00	-4.39	-1.65
5 b	0.96	-1.01	0.00	0.00	-1.41	0.75
5 c	1.16	-0.93	0.00	0.00	-1.07	0.54
5 right	-5.04	0.83	0.00	0.00	-9.63	-0.49
6 left	-6.15	0.86	0.00	0.00	-6.44	0.76
6 a	-5.15	0.69	0.00	0.00	-4.73	0.56
6 b	-1.52	0.15	0.00	0.00	-0.18	0.09
7 a	-0.50	-0.73	0.00	0.00	-1.25	0.77
7 b	-0.04	-0.31	0.00	0.00	-1.08	0.80
7 c	0.93	1.39	0.00	0.00	-0.07	1.78
8 a	-2.19	0.99	0.00	0.00	-1.71	0.34
8 b	-1.52	1.20	0.00	0.00	-1.49	0.35
8 c	0.93	1.39	0.00	0.00	-0.12	2.47
9 a	-1.45	0.88	0.00	0.00	-1.56	3.27
9 b	-0.89	1.15	0.00	0.00	-1.34	3.21
9 c	0.77	1.74	0.00	0.00	-0.16	2.47
10 top	-9.01	-3.82	0.00	0.00	-15.56	-4.79
10 a	-8.15	-3.33	0.00	0.00	-13.48	-4.20
10 b	-5.13	-1.49	0.00	0.00	-6.85	-2.25
11 top	0.16	-3.66	0.00	0.00	-17.27	-3.87
11 a	0.14	-3.07	0.00	0.00	-14.84	-3.41
11 b	0.06	-0.88	0.00	0.00	-6.84	-1.86
12 top	9.36	-3.96	0.00	0.00	-18.96	-0.96
12 a	8.46	-3.45	0.00	0.00	-16.67	-0.82
12 b	5.28	-1.55	0.00	0.00	-8.91	-0.31
13 top	3.52	-2.69	0.00	0.00	-11.46	-2.16
13 a	2.95	-2.30	0.00	0.00	-10.08	-1.93
13 b	0.96	-0.82	0.00	0.00	-5.39	-1.21
14 top	1.11	-3.43	0.00	0.00	-8.38	-2.25
14 a	1.13	-2.96	0.00	0.00	-7.36	-2.00
14 b	1.21	-1.23	0.00	0.00	-4.16	-1.97

VEH: S3 - SPECIAL TR BRUG(5.75.44) page 61
date 11/09/2009; time 13:26:44
Cline Avenue - Load Rating - Double Box AND SINGLE BOX - 8

Summary of the results (Maximum)

Section	--- Deadload ---		----- P.T. ------		--- Live load ---	
	Moment	Ax.Frc	Moment	Ax.Frc	Moment	Ax.Frc
1 a	-7.11	0.93	0.00	0.00	0.41	0.41
1 b	-11.90	1.76	0.00	0.00	0.06	0.22
1 right	-13.25	2.00	0.00	0.00	0.08	0.25
2 left	-4.24	3.03	0.00	0.00	3.70	3.02
2 a	-3.44	2.86	0.00	0.00	4.64	2.58
2 b	0.28	2.09	0.00	0.00	6.70	0.39
2 c	0.31	2.12	0.00	0.00	6.21	-0.96
2 right	-7.49	3.97	0.00	0.00	3.69	1.87
3 left	-7.66	3.95	0.00	0.00	5.88	2.70
3 a	-6.62	3.70	0.00	0.00	6.14	2.22
3 b	-0.89	2.27	0.00	0.00	6.14	-0.17
3 c	0.31	1.93	0.00	0.00	7.21	-1.65
3 right	-4.13	2.68	0.00	0.00	4.67	1.66
4 left	-13.50	1.60	0.00	0.00	14.58	1.49
4 a	-12.07	1.33	0.00	0.00	14.29	1.30
4 b	-2.86	-0.27	0.00	0.00	10.04	0.32
4 c	1.82	-0.87	0.00	0.00	8.65	-0.69
4 right	-0.14	0.41	0.00	0.00	25.45	0.69
5 left	-3.67	-0.26	0.00	0.00	3.64	0.23
5 a	-2.87	-0.41	0.00	0.00	4.52	-0.05
5 b	0.96	-1.01	0.00	0.00	7.70	-2.58
5 c	1.16	-0.93	0.00	0.00	7.43	-2.56
5 right	-5.04	0.83	0.00	0.00	0.24	0.08
6 left	-6.15	0.86	0.00	0.00	0.10	0.10
6 a	-5.15	0.69	0.00	0.00	0.07	0.08
6 b	-1.52	0.15	0.00	0.00	0.36	0.08
7 a	-0.50	-0.73	0.00	0.00	3.03	-2.28
7 b	-0.04	-0.31	0.00	0.00	2.62	-1.75
7 c	0.93	1.39	0.00	0.00	0.11	-0.16
8 a	-2.19	0.99	0.00	0.00	2.90	-0.30
8 b	-1.52	1.20	0.00	0.00	2.50	0.03
8 c	0.93	1.39	0.00	0.00	0.13	-1.96
9 a	-1.45	0.88	0.00	0.00	1.13	-1.53
9 b	-0.89	1.15	0.00	0.00	0.95	-1.46
9 c	0.77	1.74	0.00	0.00	0.08	-0.67
10 top	-9.01	-3.82	0.00	0.00	9.99	-2.31
10 a	-8.15	-3.33	0.00	0.00	8.75	-2.04
10 b	-5.13	-1.49	0.00	0.00	4.65	-1.06
11 top	0.16	-3.66	0.00	0.00	18.31	-4.48
11 a	0.14	-3.07	0.00	0.00	15.92	-3.98
11 b	0.06	-0.88	0.00	0.00	7.99	-2.22
12 top	9.36	-3.96	0.00	0.00	29.67	-3.64
12 a	8.46	-3.45	0.00	0.00	26.15	-3.28
12 b	5.28	-1.55	0.00	0.00	14.09	-1.85
13 top	3.52	-2.69	0.00	0.00	31.85	-1.84
13 a	2.95	-2.30	0.00	0.00	28.09	-1.53
13 b	0.96	-0.82	0.00	0.00	15.32	-0.51
14 top	1.11	-3.43	0.00	0.00	5.00	-5.42
14 a	1.13	-2.96	0.00	0.00	4.26	-4.76
14 b	1.21	-1.23	0.00	0.00	1.79	-2.56

VEH: S3 - SPECIAL TR BRUG(5.75.44) page 62
date 11/09/2009; time 13:26:44
Cline Avenue - Load Rating - Double Box AND SINGLE BOX - 8

Summary of the results (Minimum)

Section	--- Deadload ---		----- P.T. ------		--- Live load ---	
	Moment	Ax.Frc	Moment	Ax.Frc	Moment	Ax.Frc
1 a	-7.11	0.93	0.00	0.00	-9.14	0.51
1 b	-11.90	1.76	0.00	0.00	-16.33	1.14
1 right	-13.25	2.00	0.00	0.00	-19.24	1.38
2 left	-4.24	3.03	0.00	0.00	-10.99	-0.61
2 a	-3.44	2.86	0.00	0.00	-9.91	-0.67
2 b	0.28	2.09	0.00	0.00	-2.58	-0.26
2 c	0.31	2.12	0.00	0.00	-1.62	1.57
2 right	-7.49	3.97	0.00	0.00	-18.49	-0.63
3 left	-7.66	3.95	0.00	0.00	-16.13	-0.88
3 a	-6.62	3.70	0.00	0.00	-14.65	-0.92
3 b	-0.89	2.27	0.00	0.00	-3.48	0.50
3 c	0.31	1.93	0.00	0.00	-2.07	1.53
3 right	-4.13	2.68	0.00	0.00	-11.43	-2.14
4 left	-13.50	1.60	0.00	0.00	-30.02	-0.69
4 a	-12.07	1.33	0.00	0.00	-28.17	-0.75
4 b	-2.86	-0.27	0.00	0.00	-13.15	-0.99
4 c	1.82	-0.87	0.00	0.00	-0.76	-0.80
4 right	-0.14	0.41	0.00	0.00	-18.65	-0.06
5 left	-3.67	-0.26	0.00	0.00	-7.04	-3.67
5 a	-2.87	-0.41	0.00	0.00	-5.73	-2.18
5 b	0.96	-1.01	0.00	0.00	-1.84	1.00
5 c	1.16	-0.93	0.00	0.00	-1.41	0.72
5 right	-5.04	0.83	0.00	0.00	-12.34	-0.75
6 left	-6.15	0.86	0.00	0.00	-7.53	0.86
6 a	-5.15	0.69	0.00	0.00	-5.63	0.66
6 b	-1.52	0.15	0.00	0.00	-0.18	0.11
7 a	-0.50	-0.73	0.00	0.00	-1.68	1.03
7 b	-0.04	-0.31	0.00	0.00	-1.46	1.06
7 c	0.93	1.39	0.00	0.00	-0.09	2.40
8 a	-2.19	0.99	0.00	0.00	-2.28	0.70
8 b	-1.52	1.20	0.00	0.00	-1.99	0.57
8 c	0.93	1.39	0.00	0.00	-0.16	3.27
9 a	-1.45	0.88	0.00	0.00	-2.05	4.26
9 b	-0.89	1.15	0.00	0.00	-1.77	4.19
9 c	0.77	1.74	0.00	0.00	-0.21	3.28
10 top	-9.01	-3.82	0.00	0.00	-20.79	-5.43
10 a	-8.15	-3.33	0.00	0.00	-18.12	-4.79
10 b	-5.13	-1.49	0.00	0.00	-9.35	-2.62
11 top	0.16	-3.66	0.00	0.00	-22.92	-4.48
11 a	0.14	-3.07	0.00	0.00	-19.78	-3.97
11 b	0.06	-0.88	0.00	0.00	-9.23	-2.20
12 top	9.36	-3.96	0.00	0.00	-24.55	-1.07
12 a	8.46	-3.45	0.00	0.00	-21.63	-0.91
12 b	5.28	-1.55	0.00	0.00	-11.62	-0.32
13 top	3.52	-2.69	0.00	0.00	-15.32	-3.00
13 a	2.95	-2.30	0.00	0.00	-13.48	-2.68
13 b	0.96	-0.82	0.00	0.00	-7.31	-1.41
14 top	1.11	-3.43	0.00	0.00	-11.41	-2.75
14 a	1.13	-2.96	0.00	0.00	-10.06	-2.44
14 b	1.21	-1.23	0.00	0.00	-5.69	-2.34

IV_A_S4_EL.OUT 9/11/2009

VEH: S4 - SUPER LOAD BRUG(5.75.44) page 61
date 11/09/2009; time 13:26:45
Cline Avenue - Load Rating - Double Box AND SINGLE BOX - 8

Summary of the results (Maximum)

Section	--- Deadload ---- Moment	Ax.Frc	----- P.T. ------ Moment	Ax.Frc	--- Live load --- Moment	Ax.Frc
1 a	-7.11	0.93	0.00	0.00	0.37	0.22
1 b	-11.90	1.76	0.00	0.00	0.01	0.17
1 right	-13.25	2.00	0.00	0.00	0.01	0.20
2 left	-4.24	3.03	0.00	0.00	3.53	2.08
2 a	-3.44	2.86	0.00	0.00	4.14	1.78
2 b	0.28	2.09	0.00	0.00	4.88	0.31
2 c	0.31	2.12	0.00	0.00	4.22	-0.72
2 right	-7.49	3.97	0.00	0.00	3.40	1.00
3 left	-7.66	3.95	0.00	0.00	5.21	1.70
3 a	-6.62	3.70	0.00	0.00	5.39	1.43
3 b	-0.89	2.27	0.00	0.00	4.74	-0.34
3 c	0.31	1.93	0.00	0.00	5.05	-1.45
3 right	-4.13	2.68	0.00	0.00	4.48	2.18
4 left	-13.50	1.60	0.00	0.00	12.27	0.81
4 a	-12.07	1.33	0.00	0.00	12.03	0.69
4 b	-2.86	-0.27	0.00	0.00	7.95	0.03
4 c	1.82	-0.87	0.00	0.00	5.90	-0.50
4 right	-0.14	0.41	0.00	0.00	21.37	0.36
5 left	-3.67	-0.26	0.00	0.00	3.12	-0.14
5 a	-2.87	-0.41	0.00	0.00	3.76	-0.34
5 b	0.96	-1.01	0.00	0.00	5.66	-2.08
5 c	1.16	-0.93	0.00	0.00	5.29	-1.96
5 right	-5.04	0.83	0.00	0.00	0.22	0.08
6 left	-6.15	0.86	0.00	0.00	0.01	0.07
6 a	-5.15	0.69	0.00	0.00	0.01	0.06
6 b	-1.52	0.15	0.00	0.00	0.33	0.03
7 a	-0.50	-0.73	0.00	0.00	2.34	-1.75
7 b	-0.04	-0.31	0.00	0.00	2.03	-1.41
7 c	0.93	1.39	0.00	0.00	0.07	-0.20
8 a	-2.19	0.99	0.00	0.00	2.28	-0.14
8 b	-1.52	1.20	0.00	0.00	1.97	0.10
8 c	0.93	1.39	0.00	0.00	0.10	-1.61
9 a	-1.45	0.88	0.00	0.00	0.79	-1.13
9 b	-0.89	1.15	0.00	0.00	0.67	-0.96
9 c	0.77	1.74	0.00	0.00	0.07	-0.53
10 top	-9.01	-3.82	0.00	0.00	6.91	-2.03
10 a	-8.15	-3.33	0.00	0.00	6.05	-1.79
10 b	-5.13	-1.49	0.00	0.00	3.32	-0.74
11 top	0.16	-3.66	0.00	0.00	13.27	-1.81
11 a	0.14	-3.07	0.00	0.00	11.53	-1.60
11 b	0.06	-0.88	0.00	0.00	5.76	-1.50
12 top	9.36	-3.96	0.00	0.00	23.25	-2.23
12 a	8.46	-3.45	0.00	0.00	20.56	-2.02
12 b	5.28	-1.55	0.00	0.00	11.18	-1.25
13 top	3.52	-2.69	0.00	0.00	24.80	-0.94
13 a	2.95	-2.30	0.00	0.00	21.87	-0.75
13 b	0.96	-0.82	0.00	0.00	11.96	-0.14
14 top	1.11	-3.43	0.00	0.00	3.58	-3.95
14 a	1.13	-2.96	0.00	0.00	3.04	-3.47
14 b	1.21	-1.23	0.00	0.00	1.25	-1.84

IV_A_S4_EL.OUT 9/11/2009

VEH: S4 - SUPER LOAD BRUG(5.75.44) page 62
date 11/09/2009; time 13:26:45
Cline Avenue - Load Rating - Double Box AND SINGLE BOX - 8

Summary of the results (Minimum)

Section	--- Deadload ---- Moment	Ax.Frc	----- P.T. ------ Moment	Ax.Frc	--- Live load --- Moment	Ax.Frc
1 a	-7.11	0.93	0.00	0.00	-5.86	0.25
1 b	-11.90	1.76	0.00	0.00	-10.45	0.62
1 right	-13.25	2.00	0.00	0.00	-12.46	0.79
2 left	-4.24	3.03	0.00	0.00	-7.66	-0.49
2 a	-3.44	2.86	0.00	0.00	-6.91	-0.54
2 b	0.28	2.09	0.00	0.00	-2.06	-0.36
2 c	0.31	2.12	0.00	0.00	-1.10	1.10
2 right	-7.49	3.97	0.00	0.00	-13.55	-0.42
3 left	-7.66	3.95	0.00	0.00	-11.48	-0.79
3 a	-6.62	3.70	0.00	0.00	-10.43	-0.81
3 b	-0.89	2.27	0.00	0.00	-2.78	0.33
3 c	0.31	1.93	0.00	0.00	-1.68	1.38
3 right	-4.13	2.68	0.00	0.00	-7.99	-1.84
4 left	-13.50	1.60	0.00	0.00	-23.32	-0.54
4 a	-12.07	1.33	0.00	0.00	-22.02	-0.57
4 b	-2.86	-0.27	0.00	0.00	-10.88	-0.63
4 c	1.82	-0.87	0.00	0.00	-0.57	-0.55
4 right	-0.14	0.41	0.00	0.00	-13.77	-0.05
5 left	-3.67	-0.26	0.00	0.00	-3.91	-1.74
5 a	-2.87	-0.41	0.00	0.00	-3.36	-1.72
5 b	0.96	-1.01	0.00	0.00	-1.46	0.81
5 c	1.16	-0.93	0.00	0.00	-1.12	0.59
5 right	-5.04	0.83	0.00	0.00	-8.55	-0.79
6 left	-6.15	0.86	0.00	0.00	-4.95	0.52
6 a	-5.15	0.69	0.00	0.00	-3.60	0.38
6 b	-1.52	0.15	0.00	0.00	-0.07	0.04
7 a	-0.50	-0.73	0.00	0.00	-1.30	0.82
7 b	-0.04	-0.31	0.00	0.00	-1.13	0.84
7 c	0.93	1.39	0.00	0.00	-0.06	1.65
8 a	-2.19	0.99	0.00	0.00	-1.78	0.00
8 b	-1.52	1.20	0.00	0.00	-1.55	0.19
8 c	0.93	1.39	0.00	0.00	-0.12	2.37
9 a	-1.45	0.88	0.00	0.00	-1.60	3.27
9 b	-0.89	1.15	0.00	0.00	-1.39	3.17
9 c	0.77	1.74	0.00	0.00	-0.16	2.26
10 top	-9.01	-3.82	0.00	0.00	-14.82	-3.71
10 a	-8.15	-3.33	0.00	0.00	-12.90	-3.27
10 b	-5.13	-1.49	0.00	0.00	-6.65	-1.77
11 top	0.16	-3.66	0.00	0.00	-17.00	-1.80
11 a	0.14	-3.07	0.00	0.00	-14.65	-1.59
11 b	0.06	-0.88	0.00	0.00	-6.79	-1.49
12 top	9.36	-3.96	0.00	0.00	-19.24	-0.59
12 a	8.46	-3.45	0.00	0.00	-16.95	-0.49
12 b	5.28	-1.55	0.00	0.00	-9.12	-0.12
13 top	3.52	-2.69	0.00	0.00	-11.35	-1.67
13 a	2.95	-2.30	0.00	0.00	-10.06	-1.50
13 b	0.96	-0.82	0.00	0.00	-5.55	-0.89
14 top	1.11	-3.43	0.00	0.00	-8.03	-1.98
14 a	1.13	-2.96	0.00	0.00	-7.09	-1.75
14 b	1.21	-1.23	0.00	0.00	-3.98	-0.93

VEH: S5 - SUPERLOAD BRUG(5.75.44) page 61
date 11/09/2009; time 13:26:46
Cline Avenue - Load Rating - Double Box AND SINGLE BOX - 8

Summary of the results (Maximum)

Section	--- Deadload ---		----- P.T. ------		--- Live load ---	
	Moment	Ax.Frc	Moment	Ax.Frc	Moment	Ax.Frc
1 a	-7.11	0.93	0.00	0.00	0.52	0.32
1 b	-11.90	1.76	0.00	0.00	0.05	0.20
1 right	-13.25	2.00	0.00	0.00	0.07	0.22
2 left	-4.24	3.03	0.00	0.00	3.95	2.82
2 a	-3.44	2.86	0.00	0.00	4.93	2.40
2 b	0.28	2.09	0.00	0.00	6.48	0.37
2 c	0.31	2.12	0.00	0.00	5.86	-1.03
2 right	-7.49	3.97	0.00	0.00	3.83	1.25
3 left	-7.66	3.95	0.00	0.00	6.16	2.23
3 a	-6.62	3.70	0.00	0.00	6.56	1.90
3 b	-0.89	2.27	0.00	0.00	6.35	-0.56
3 c	0.31	1.93	0.00	0.00	6.96	-2.13
3 right	-4.13	2.68	0.00	0.00	4.78	3.18
4 left	-13.50	1.60	0.00	0.00	15.73	1.04
4 a	-12.07	1.33	0.00	0.00	15.45	0.88
4 b	-2.86	-0.27	0.00	0.00	10.54	-0.12
4 c	1.82	-0.87	0.00	0.00	8.26	-0.79
4 right	-0.14	0.41	0.00	0.00	27.68	0.59
5 left	-3.67	-0.26	0.00	0.00	3.41	-0.16
5 a	-2.87	-0.41	0.00	0.00	4.40	-0.41
5 b	0.96	-1.01	0.00	0.00	7.60	-2.76
5 c	1.16	-0.93	0.00	0.00	7.26	-2.60
5 right	-5.04	0.83	0.00	0.00	0.30	0.11
6 left	-6.15	0.86	0.00	0.00	0.09	0.07
6 a	-5.15	0.69	0.00	0.00	0.07	0.05
6 b	-1.52	0.15	0.00	0.00	0.46	0.07
7 a	-0.50	-0.73	0.00	0.00	2.99	-2.22
7 b	-0.04	-0.31	0.00	0.00	2.60	-1.74
7 c	0.93	1.39	0.00	0.00	0.09	-0.25
8 a	-2.19	0.99	0.00	0.00	2.96	-0.24
8 b	-1.52	1.20	0.00	0.00	2.55	0.09
8 c	0.93	1.39	0.00	0.00	0.14	-2.13
9 a	-1.45	0.88	0.00	0.00	1.01	-1.49
9 b	-0.89	1.15	0.00	0.00	0.85	-1.60
9 c	0.77	1.74	0.00	0.00	0.09	-0.70
10 top	-9.01	-3.82	0.00	0.00	9.45	-2.32
10 a	-8.15	-3.33	0.00	0.00	8.25	-2.05
10 b	-5.13	-1.49	0.00	0.00	4.34	-1.06
11 top	0.16	-3.66	0.00	0.00	17.24	-4.45
11 a	0.14	-3.07	0.00	0.00	14.94	-3.94
11 b	0.06	-0.88	0.00	0.00	7.45	-2.18
12 top	9.36	-3.96	0.00	0.00	30.56	-2.99
12 a	8.46	-3.45	0.00	0.00	27.01	-2.71
12 b	5.28	-1.55	0.00	0.00	14.66	-1.67
13 top	3.52	-2.69	0.00	0.00	32.75	-1.59
13 a	2.95	-2.30	0.00	0.00	28.84	-1.30
13 b	0.96	-0.82	0.00	0.00	15.70	-0.35
14 top	1.11	-3.43	0.00	0.00	4.42	-5.62
14 a	1.13	-2.96	0.00	0.00	3.76	-4.93
14 b	1.21	-1.23	0.00	0.00	1.52	-2.61

VEH: S5 - SUPERLOAD BRUG(5.75.44) page 62
date 11/09/2009; time 13:26:46
Cline Avenue - Load Rating - Double Box AND SINGLE BOX - 8

Summary of the results (Minimum)

Section	--- Deadload ---		----- P.T. ------		--- Live load ---	
	Moment	Ax.Frc	Moment	Ax.Frc	Moment	Ax.Frc
1 a	-7.11	0.93	0.00	0.00	-8.27	0.37
1 b	-11.90	1.76	0.00	0.00	-14.87	0.95
1 right	-13.25	2.00	0.00	0.00	-17.73	1.19
2 left	-4.24	3.03	0.00	0.00	-10.59	-0.65
2 a	-3.44	2.86	0.00	0.00	-9.57	-0.73
2 b	0.28	2.09	0.00	0.00	-2.56	-0.47
2 c	0.31	2.12	0.00	0.00	-1.39	1.38
2 right	-7.49	3.97	0.00	0.00	-18.05	-0.50
3 left	-7.66	3.95	0.00	0.00	-15.30	-1.13
3 a	-6.62	3.70	0.00	0.00	-13.92	-1.17
3 b	-0.89	2.27	0.00	0.00	-3.50	0.34
3 c	0.31	1.93	0.00	0.00	-2.21	1.91
3 right	-4.13	2.68	0.00	0.00	-11.00	-2.50
4 left	-13.50	1.60	0.00	0.00	-30.74	-0.60
4 a	-12.07	1.33	0.00	0.00	-28.99	-0.64
4 b	-2.86	-0.27	0.00	0.00	-14.27	-0.71
4 c	1.82	-0.87	0.00	0.00	-0.73	-0.63
4 right	-0.14	0.41	0.00	0.00	-18.11	-0.10
5 left	-3.67	-0.26	0.00	0.00	-5.63	-3.88
5 a	-2.87	-0.41	0.00	0.00	-4.82	-2.22
5 b	0.96	-1.01	0.00	0.00	-1.91	1.05
5 c	1.16	-0.93	0.00	0.00	-1.45	0.76
5 right	-5.04	0.83	0.00	0.00	-11.55	-0.66
6 left	-6.15	0.86	0.00	0.00	-7.44	0.83
6 a	-5.15	0.69	0.00	0.00	-5.48	0.62
6 b	-1.52	0.15	0.00	0.00	-0.19	0.10
7 a	-0.50	-0.73	0.00	0.00	-1.65	1.04
7 b	-0.04	-0.31	0.00	0.00	-1.43	1.07
7 c	0.93	1.39	0.00	0.00	-0.08	2.24
8 a	-2.19	0.99	0.00	0.00	-2.29	-0.24
8 b	-1.52	1.20	0.00	0.00	-2.00	-0.38
8 c	0.93	1.39	0.00	0.00	-0.16	3.20
9 a	-1.45	0.88	0.00	0.00	-2.08	4.33
9 b	-0.89	1.15	0.00	0.00	-1.80	4.22
9 c	0.77	1.74	0.00	0.00	-0.21	3.11
10 top	-9.01	-3.82	0.00	0.00	-19.52	-5.41
10 a	-8.15	-3.33	0.00	0.00	-16.94	-4.76
10 b	-5.13	-1.49	0.00	0.00	-8.62	-2.58
11 top	0.16	-3.66	0.00	0.00	-22.25	-4.45
11 a	0.14	-3.07	0.00	0.00	-19.14	-3.94
11 b	0.06	-0.88	0.00	0.00	-8.81	-2.16
12 top	9.36	-3.96	0.00	0.00	-25.49	-0.96
12 a	8.46	-3.45	0.00	0.00	-22.42	-0.80
12 b	5.28	-1.55	0.00	0.00	-12.01	-0.25
13 top	3.52	-2.69	0.00	0.00	-14.81	-2.25
13 a	2.95	-2.30	0.00	0.00	-13.11	-2.02
13 b	0.96	-0.82	0.00	0.00	-7.21	-1.19
14 top	1.11	-3.43	0.00	0.00	-10.35	-2.71
14 a	1.13	-2.96	0.00	0.00	-9.12	-2.41
14 b	1.21	-1.23	0.00	0.00	-5.17	-2.35

4.8.4 Brug Input Striped Lanes

```
* start ; column 11-30 can be used to have your own text on the top of each page
*   5   10   15   20   25   30   35   40   45   50   55   60   65   70   75   80
*   V    V    V    V    V    V    V    V    V    V    V    V    V    V    V    V
00001  1 1     VEH: HL93 TRUCK  - SINGLE VEHICLE
* code 1001
Cline Avenue - Load Rating - Double Box  AND SINGLE BOX  - 87.34' WIDE
* code 1002
    2         1
* code 1003
*   5   10   15   20   25   30   35   40   45   50   55   60   65   70   75   80
*   V    V    V    V    V    V    V    V    V    V    V    V    V    V    V    V
250.0      183.0        87.34       1.0       1.0       1.3
* code 1004
    1    0    2
* code 1005
   72    1
* code 1005a
* location traffic lanes
13.958
* maximum and minimum truck
11.708    75.424    10.000
* code 1007, linear loads
0.7350    0.441
86.605    0.441
* code 1201
   12    8    6    3    5
* code 1202 coordinates
0.0000    0.0
10.7917   0.0
10.7917   -7.938
27.7083   0.0
27.7083   -7.938
44.6250   0.0
44.6250   -7.938
65.2569   0.0
65.2569   -7.938
81.0903   0.0
81.0903   -7.938
87.3403   0.0
* code 1203 - profile 1
    5    3    4
0.0000    0.7500
5.2083    0.7500
7.7083    1.2083
10.2083   1.6667
10.7917   1.6667
* code 1203 - profile 2
    7    2    3    4
0.0000    1.6667
0.5833    1.6667
5.5833    0.7500
8.4583    0.7500
11.3333   0.7500
16.3333   1.6667
16.9167   1.6667
* code 1203 - profile 3
    7    2    3    4
0.0000    1.6667
0.5833    1.6667
5.5833    0.7500
10.3160   0.7500
15.0486   0.7500
20.0486   1.6667
20.6319   1.6667
* code 1203 - profile 4
    7    2    3    4
0.0000    1.6667
0.5833    1.6667
5.5833    0.7500
7.9167    0.7500
10.2500   0.7500
15.2500   1.6667
15.8333   1.6667
* code 1203 - profile 5
    4    2    3
0.0000    1.6667
0.5833    1.6667
3.4167    1.2083
6.2500    0.7500
* code 1203 - profile 6
    7    2    3    4
```

```
0.0000    1.4583
0.5833    1.4583
1.5833    0.4583
8.4583    0.4583
15.3333   0.4583
16.3333   1.4583
16.9167   1.4583
* code 1203 - profile 7
    7    2    3    4
0.0000    1.4583
0.5833    1.4583
1.5833    0.4583
7.9167    0.4583
14.2500   0.4583
15.2500   1.4583
15.8333   1.4583
* code 1203 - profile 8
    5    2    3
0.0000    1.1667
0.8334    1.1667
3.7709    1.1667
6.7084    1.1667
7.9375    1.1667
* code 1204 - assembling boxgirder
    1    2    1
    2    4    2
    4    6    2
    6    8    3
    8   10    4
   10   12    5
    3    5    6
    5    7    6
    9   11    7
    2    3    8
    4    5    8
    6    7    8
    8    9    8
   10   11    8
* code 1205 control code
    1    2   13    1    1    0    4    3     1.0       1.0
* code 1206 wheels/axle
       0.0
       1.5
       6.0
       7.5 0.833
* code 1207 definition axles
0.0       0.1
14.0      0.4
28.0      0.4
* code 1208 - accuracy
0.00001   0.00001   0.00001   .00001    .00001
* code 1209 number sections
   50
   1A   1B   1R   2L   2A   2B   2C   2R   3L   3A   3B   3C   3R
   4L   4A   4B   4C   4R   5L   5A   5B   5C   5R   6L   6A   6B
   7A   7B   7C   8A   8B   8C   9A   9B   9C  10L  10A  10B  11L  11A
  11B  12L  12A  12B  13L  13A  13B  14L  14A  14B
* code 1210 - density conrete
0.156
* code 1211 - extra forces selfweight

* code 1212 - surcharge
2.1835
* code 1213 - Prestressing Layout - NONE
```

1_IV_A_SL_HL93_tandem_EL.txt 9/11/2009

```
* start ; column 11-30 can be used to have your own text on the top of each page
*   5   10   15   20   25   30   35   40   45   50   55   60   65   70   75   80
*   V    V    V    V    V    V    V    V    V    V    V    V    V    V    V    V
00001  1 1     VEH: HL93- TANDEM - Single Vehicle
* code 1001
Cline Avenue - Load Rating - Double Box  AND SINGLE BOX  - 87.34' WIDE
* code 1002
    2         1
* code 1003
*   5   10   15   20   25   30   35   40   45   50   55   60   65   70   75   80
*   V    V    V    V    V    V    V    V    V    V    V    V    V    V    V    V
250.0      183.0        87.34       1.0       1.0       1.3
* code 1004
    1    0    2
* code 1005
   50    1
* code 1005a
* location traffic lanes
13.958
* maximum and minimum truck
11.708    75.424    10.000
* code 1007, linear loads
0.7350    0.441
86.605    0.441
* code 1201
   12    8    6    3    5
* code 1202 coordinates
0.0000    0.0
10.7917   0.0
10.7917   -7.938
27.7083   0.0
27.7083   -7.938
44.6250   0.0
44.6250   -7.938
65.2569   0.0
65.2569   -7.938
81.0903   0.0
81.0903   -7.938
87.3403   0.0
* code 1203 - profile 1
    5    3    4
0.0000    0.7500
5.2083    0.7500
7.7083    1.2083
10.2083   1.6667
10.7917   1.6667
* code 1203 - profile 2
    7    2    3    4
0.0000    1.6667
0.5833    1.6667
5.5833    0.7500
8.4583    0.7500
11.3333   0.7500
16.3333   1.6667
16.9167   1.6667
* code 1203 - profile 3
    7    2    3    4
0.0000    1.6667
0.5833    1.6667
5.5833    0.7500
10.3160   0.7500
15.0486   0.7500
20.0486   1.6667
20.6319   1.6667
* code 1203 - profile 4
    7    2    3    4
0.0000    1.6667
0.5833    1.6667
5.5833    0.7500
7.9167    0.7500
10.2500   0.7500
15.2500   1.6667
15.8333   1.6667
* code 1203 - profile 5
    4    2    3
0.0000    1.6667
0.5833    1.6667
3.4167    1.2083
6.2500    0.7500
* code 1203 - profile 6
    7    2    3    4
```

1_IV_A_SL_HL93_tandem_EL.txt 9/11/2009

```
0.0000    1.4583
0.5833    1.4583
1.5833    0.4583
8.4583    0.4583
15.3333   0.4583
16.3333   1.4583
16.9167   1.4583
* code 1203 - profile 7
    7    2    3    4
0.0000    1.4583
0.5833    1.4583
1.5833    0.4583
7.9167    0.4583
14.2500   0.4583
15.2500   1.4583
15.8333   1.4583
* code 1203 - profile 8
    5    2    3
0.0000    1.1667
0.8334    1.1667
3.7709    1.1667
6.7084    1.1667
7.9375    1.1667
* code 1204 - assembling boxgirder
    1    2    1
    2    4    2
    4    6    2
    6    8    3
    8   10    4
   10   12    5
    3    5    6
    5    7    6
    9   11    7
    2    3    8
    4    5    8
    6    7    8
    8    9    8
   10   11    8
* code 1205 control code
    1    2   13    1    1    0    4    2     1.0       1.0
* code 1206 wheels/axle
       0.0
       1.5
       6.0
       7.5 0.833
* code 1207 definition axles
0.0       0.5
4.0       0.5
* code 1208 - accuracy
0.00001   0.00001   0.00001   .00001    .00001
* code 1209 number sections
   50
   1A   1B   1R   2L   2A   2B   2C   2R   3L   3A   3B   3C   3R
   4L   4A   4B   4C   4R   5L   5A   5B   5C   5R   6L   6A   6B
   7A   7B   7C   8A   8B   8C   9A   9B   9C  10L  10A  10B  11L  11A
  11B  12L  12A  12B  13L  13A  13B  14L  14A  14B
* code 1210 - density conrete
0.156
* code 1211 - extra forces selfweight

* code 1212 - surcharge
2.1835
* code 1213 - Prestressing Layout - NONE
```

IV_A_SL_HL93_truck_EL.txt 9/11/2009

```
* start ; column 11-30 can be used to have your own text on the top of each page
*   5   10   15   20   25   30   35   40   45   50   55   60   65   70   75   80
*   V    V    V    V    V    V    V    V    V    V    V    V    V    V    V    V
00001  1 1     VEH: HL93 TRUCK
* code 1001
Cline Avenue - Striped Lane - Double Box  AND SINGLE BOX  - 87.34' WIDE
* code 1002
    2         1
* code 1003
*   5   10   15   20   25   30   35   40   45   50   55   60   65   70   75   80
*   V    V    V    V    V    V    V    V    V    V    V    V    V    V    V    V
250.0      183.0        87.34       1.0       1.0       1.3
* code 1004
    2    0    2
* code 1005
   72
* code 1005a
* location traffic lanes
13.958    25.958
* maximum and minimum truck
11.708    75.424    10.000
* code 1007, linear loads
0.7350    0.441
86.605    0.441
* code 1201
   12    8    6    3    5
* code 1202 coordinates
0.0000    0.0
10.7917   0.0
10.7917   -7.938
27.7083   0.0
27.7083   -7.938
44.6250   0.0
44.6250   -7.938
65.2569   0.0
65.2569   -7.938
81.0903   0.0
81.0903   -7.938
87.3403   0.0
* code 1203 - profile 1
    5    3    4
0.0000    0.7500
5.2083    0.7500
7.7083    1.2083
10.2083   1.6667
10.7917   1.6667
* code 1203 - profile 2
    7    2    3    4
0.0000    1.6667
0.5833    1.6667
5.5833    0.7500
8.4583    0.7500
11.3333   0.7500
16.3333   1.6667
16.9167   1.6667
* code 1203 - profile 3
    7    2    3    4
0.0000    1.6667
0.5833    1.6667
5.5833    0.7500
10.3160   0.7500
15.0486   0.7500
20.0486   1.6667
20.6319   1.6667
* code 1203 - profile 4
    7    2    3    4
0.0000    1.6667
0.5833    1.6667
5.5833    0.7500
7.9167    0.7500
10.2500   0.7500
15.2500   1.6667
15.8333   1.6667
* code 1203 - profile 5
    4    2    3
0.0000    1.6667
0.5833    1.6667
3.4167    1.2083
6.2500    0.7500
* code 1203 - profile 6
    7    2    3    4
```

```
0.0000    1.4583
0.5833    1.4583
1.5833    0.4583
8.4583    0.4583
15.3333   0.4583
16.3333   1.4583
16.9167   1.4583
* code 1203 - profile 7
    7    2    3    4
0.0000    1.4583
0.5833    1.4583
1.5833    0.4583
7.9167    0.4583
14.2500   0.4583
15.2500   1.4583
15.8333   1.4583
* code 1203 - profile 8
    5    2    3
0.0000    1.1667
0.8334    1.1667
3.7709    1.1667
6.7084    1.1667
7.9375    1.1667
* code 1204 - assembling boxgirder
    1    2    1
    2    4    2
    4    6    2
    6    8    3
    8   10    4
   10   12    5
    3    5    6
    5    7    6
    9   11    7
    2    3    8
    4    5    8
    6    7    8
    8    9    8
   10   11    8
* code 1205 control code
    1    2   13    1    1    0    4    3     1.0       1.0
* code 1206 wheels/axle
       0.0
       1.5
       6.0
       7.5 0.833
* code 1207 definition axles
0.0       0.1
14.0      0.4
28.0      0.4
* code 1208 - accuracy
0.00001   0.00001   0.00001   .00001    .00001
* code 1209 number sections
   50
   1A   1B   1R   2L   2A   2B   2C   2R   3L   3A   3B   3C   3R
   4L   4A   4B   4C   4R   5L   5A   5B   5C   5R   6L   6A   6B
   7A   7B   7C   8A   8B   8C   9A   9B   9C  10L  10A  10B  11L  11A
  11B  12L  12A  12B  13L  13A  13B  14L  14A  14B
* code 1210 - density conrete
0.156
* code 1211 - extra forces selfweight

* code 1212 - surcharge
2.1835
* code 1213 - Prestressing Layout - NONE
```

IV_A_SL_HL93_tandem_EL.txt 9/11/2009

```
* start ; column 11-30 can be used to have your own text on the top of each page
*   5   10   15   20   25   30   35   40   45   50   55   60   65   70   75   80
*   V    V    V    V    V    V    V    V    V    V    V    V    V    V    V    V
00001  1 1     VEH: HL93- TANDEM
* code 1001
Cline Avenue - Load Rating - Double Box  AND SINGLE BOX  - 87.34' WIDE
* code 1002
    2         1
* code 1003
*   5   10   15   20   25   30   35   40   45   50   55   60   65   70   75   80
*   V    V    V    V    V    V    V    V    V    V    V    V    V    V    V    V
250.0      183.0        87.34       1.0       1.0       1.3
* code 1004
    2    0    2
* code 1005
   50
* code 1005a
* location traffic lanes
13.958    25.958
* maximum and minimum truck
11.708    75.424    10.000
* code 1007, linear loads
0.7350    0.441
86.605    0.441
* code 1201
   12    8    6    3    5
* code 1202 coordinates
0.0000    0.0
10.7917   0.0
10.7917   -7.938
27.7083   0.0
27.7083   -7.938
44.6250   0.0
44.6250   -7.938
65.2569   0.0
65.2569   -7.938
81.0903   0.0
81.0903   -7.938
87.3403   0.0
* code 1203 - profile 1
    5    3    4
0.0000    0.7500
5.2083    0.7500
7.7083    1.2083
10.2083   1.6667
10.7917   1.6667
* code 1203 - profile 2
    7    2    3    4
0.0000    1.6667
0.5833    1.6667
5.5833    0.7500
8.4583    0.7500
11.3333   0.7500
16.3333   1.6667
16.9167   1.6667
* code 1203 - profile 3
    7    2    3    4
0.0000    1.6667
0.5833    1.6667
5.5833    0.7500
10.3160   0.7500
15.0486   0.7500
20.0486   1.6667
20.6319   1.6667
* code 1203 - profile 4
    7    2    3    4
0.0000    1.6667
0.5833    1.6667
5.5833    0.7500
7.9167    0.7500
10.2500   0.7500
15.2500   1.6667
15.8333   1.6667
* code 1203 - profile 5
    4    2    3
0.0000    1.6667
0.5833    1.6667
3.4167    1.2083
6.2500    0.7500
* code 1203 - profile 6
    7    2    3    4
```

```
0.0000    1.4583
0.5833    1.4583
1.5833    0.4583
8.4583    0.4583
15.3333   0.4583
16.3333   1.4583
16.9167   1.4583
* code 1203 - profile 7
    7    2    3    4
0.0000    1.4583
0.5833    1.4583
1.5833    0.4583
7.9167    0.4583
14.2500   0.4583
15.2500   1.4583
15.8333   1.4583
* code 1203 - profile 8
    5    2    3
0.0000    1.1667
0.8334    1.1667
3.7709    1.1667
6.7084    1.1667
7.9375    1.1667
* code 1204 - assembling boxgirder
    1    2    1
    2    4    2
    4    6    2
    6    8    3
    8   10    4
   10   12    5
    3    5    6
    5    7    6
    9   11    7
    2    3    8
    4    5    8
    6    7    8
    8    9    8
   10   11    8
* code 1205 control code
    1    2   13    1    1    0    4    2     1.0       1.0
* code 1206 wheels/axle
       0.0
       1.5
       6.0
       7.5 0.833
* code 1207 definition axles
0.0       0.5
4.0       0.5
* code 1208 - accuracy
0.00001   0.00001   0.00001   .00001    .00001
* code 1209 number sections
   50
   1A   1B   1R   2L   2A   2B   2C   2R   3L   3A   3B   3C   3R
   4L   4A   4B   4C   4R   5L   5A   5B   5C   5R   6L   6A   6B
   7A   7B   7C   8A   8B   8C   9A   9B   9C  10L  10A  10B  11L  11A
  11B  12L  12A  12B  13L  13A  13B  14L  14A  14B
* code 1210 - density conrete
0.156
* code 1211 - extra forces selfweight

* code 1212 - surcharge
2.1835
* code 1213 - Prestressing Layout - NONE
•
```

4.8.5 Brug Output Striped Lanes (Summary)

1_IV_A_SL_HL93_truck_EL.OUT 9/11/2009

VEH: HL93 TRUCK - S BRUG(5.75.44) page 61
date 11/09/2009; time 14:43:41
Cline Avenue - Load Rating - Double Box AND SINGLE BOX - 8

Summary of the results (Maximum)

Section	--- Deadload ---		----- P.T. ------		--- Live load ---	
	Moment	Ax.Frc	Moment	Ax.Frc	Moment	Ax.Frc
1 a	-7.11	0.93	0.00	0.00	0.85	0.21
1 b	-11.90	1.76	0.00	0.00	-0.01	0.01
1 right	-13.25	2.00	0.00	0.00	-0.01	0.01
2 left	-4.24	3.03	0.00	0.00	-0.11	0.00
2 a	-3.44	2.86	0.00	0.00	-0.11	0.00
2 b	0.28	2.09	0.00	0.00	3.86	0.11
2 c	0.31	2.12	0.00	0.00	4.05	-0.33
2 right	-7.49	3.97	0.00	0.00	0.04	0.10
3 left	-7.66	3.95	0.00	0.00	0.59	0.43
3 a	-6.62	3.70	0.00	0.00	1.03	0.98
3 b	-0.89	2.27	0.00	0.00	3.62	0.03
3 c	0.31	1.93	0.00	0.00	4.18	-0.27
3 right	-4.13	2.68	0.00	0.00	0.61	1.60
4 left	-13.50	1.60	0.00	0.00	2.01	0.09
4 a	-12.07	1.33	0.00	0.00	2.29	1.01
4 b	-2.86	-0.27	0.00	0.00	4.05	0.18
4 c	1.82	-0.87	0.00	0.00	4.88	-0.16
4 right	-0.14	0.41	0.00	0.00	3.34	0.92
5 left	-3.67	-0.26	0.00	0.00	0.40	1.17
5 a	-2.87	-0.41	0.00	0.00	1.63	0.69
5 b	0.96	-1.01	0.00	0.00	4.01	-0.33
5 c	1.16	-0.93	0.00	0.00	4.06	-0.67
5 right	-5.04	0.83	0.00	0.00	0.05	0.00
6 left	-6.15	0.86	0.00	0.00	0.08	0.05
6 a	-5.15	0.69	0.00	0.00	0.07	0.04
6 b	-1.52	0.15	0.00	0.00	0.01	0.01
7 a	-0.50	-0.73	0.00	0.00	0.64	-0.29
7 b	-0.04	-0.31	0.00	0.00	0.54	-0.10
7 c	0.93	1.39	0.00	0.00	0.00	-0.06
8 a	-2.19	0.99	0.00	0.00	0.61	-0.31
8 b	-1.52	1.20	0.00	0.00	0.51	0.00
8 c	0.93	1.39	0.00	0.00	0.03	-0.30
9 a	-1.45	0.88	0.00	0.00	0.39	-0.58
9 b	-0.89	1.15	0.00	0.00	0.31	-0.46
9 c	0.77	1.74	0.00	0.00	0.02	-0.15
10 top	-9.01	-3.82	0.00	0.00	3.99	-1.67
10 a	-8.15	-3.33	0.00	0.00	3.41	-1.45
10 b	-5.13	-1.49	0.00	0.00	1.83	-0.72
11 top	0.16	-3.66	0.00	0.00	5.88	-1.83
11 a	0.14	-3.07	0.00	0.00	5.02	-1.61
11 b	0.06	-0.88	0.00	0.00	2.46	-0.85
12 top	9.36	-3.96	0.00	0.00	7.42	-3.35
12 a	8.46	-3.45	0.00	0.00	6.27	-2.90
12 b	5.28	-1.55	0.00	0.00	3.20	-0.80
13 top	3.52	-2.69	0.00	0.00	7.92	-1.45
13 a	2.95	-2.30	0.00	0.00	6.86	-1.25
13 b	0.96	-0.82	0.00	0.00	3.63	-0.56
14 top	1.11	-3.43	0.00	0.00	0.04	0.05
14 a	1.13	-2.96	0.00	0.00	0.05	0.05
14 b	1.21	-1.23	0.00	0.00	0.09	0.05

1_IV_A_SL_HL93_truck_EL.OUT 9/11/2009

VEH: HL93 TRUCK - S BRUG(5.75.44) page 62
date 11/09/2009; time 14:43:41
Cline Avenue - Load Rating - Double Box AND SINGLE BOX - 8

Summary of the results (Minimum)

Section	--- Deadload ---		----- P.T. ------		--- Live load ---	
	Moment	Ax.Frc	Moment	Ax.Frc	Moment	Ax.Frc
1 a	-7.11	0.93	0.00	0.00	-0.26	0.20
1 b	-11.90	1.76	0.00	0.00	-3.09	0.67
1 right	-13.25	2.00	0.00	0.00	-5.17	0.93
2 left	-4.24	3.03	0.00	0.00	-5.71	-0.05
2 a	-3.44	2.86	0.00	0.00	-5.03	-0.12
2 b	0.28	2.09	0.00	0.00	-0.84	-0.21
2 c	0.31	2.12	0.00	0.00	-0.34	0.15
2 right	-7.49	3.97	0.00	0.00	-7.70	-0.23
3 left	-7.66	3.95	0.00	0.00	-7.27	-0.04
3 a	-6.62	3.70	0.00	0.00	-6.48	-0.10
3 b	-0.89	2.27	0.00	0.00	-1.30	-0.26
3 c	0.31	1.93	0.00	0.00	-0.46	0.34
3 right	-4.13	2.68	0.00	0.00	-5.82	-0.12
4 left	-13.50	1.60	0.00	0.00	-8.82	0.33
4 a	-12.07	1.33	0.00	0.00	-7.60	0.23
4 b	-2.86	-0.27	0.00	0.00	-2.90	-0.25
4 c	1.82	-0.87	0.00	0.00	-0.23	-0.24
4 right	-0.14	0.41	0.00	0.00	-7.12	0.27
5 left	-3.67	-0.26	0.00	0.00	-5.58	-0.73
5 a	-2.87	-0.41	0.00	0.00	-4.69	-0.83
5 b	0.96	-1.01	0.00	0.00	-0.23	0.11
5 c	1.16	-0.93	0.00	0.00	-0.40	0.21
5 right	-5.04	0.83	0.00	0.00	-6.23	-0.30
6 left	-6.15	0.86	0.00	0.00	-1.55	0.45
6 a	-5.15	0.69	0.00	0.00	-1.05	0.33
6 b	-1.52	0.15	0.00	0.00	-0.15	0.05
7 a	-0.50	-0.73	0.00	0.00	-0.37	0.18
7 b	-0.04	-0.31	0.00	0.00	-0.32	0.18
7 c	0.93	1.39	0.00	0.00	-0.04	0.72
8 a	-2.19	0.99	0.00	0.00	-0.48	0.56
8 b	-1.52	1.20	0.00	0.00	-0.42	0.54
8 c	0.93	1.39	0.00	0.00	-0.05	0.84
9 a	-1.45	0.88	0.00	0.00	-0.43	1.06
9 b	-0.89	1.15	0.00	0.00	-0.36	1.09
9 c	0.77	1.74	0.00	0.00	-0.06	1.01
10 top	-9.01	-3.82	0.00	0.00	-2.74	-6.52
10 a	-8.15	-3.33	0.00	0.00	-2.32	-5.52
10 b	-5.13	-1.49	0.00	0.00	-1.03	-2.48
11 top	0.16	-3.66	0.00	0.00	-6.64	-1.84
11 a	0.14	-3.07	0.00	0.00	-5.66	-1.61
11 b	0.06	-0.88	0.00	0.00	-2.68	-0.85
12 top	9.36	-3.96	0.00	0.00	-6.22	-1.50
12 a	8.46	-3.45	0.00	0.00	-5.38	-1.30
12 b	5.28	-1.55	0.00	0.00	-2.89	-0.61
13 top	3.52	-2.69	0.00	0.00	-5.30	-3.24
13 a	2.95	-2.30	0.00	0.00	-4.40	-2.80
13 b	0.96	-0.82	0.00	0.00	-2.15	-0.73
14 top	1.11	-3.43	0.00	0.00	-4.72	-1.91
14 a	1.13	-2.96	0.00	0.00	-4.05	-1.66
14 b	1.21	-1.23	0.00	0.00	-2.17	-0.83

1_IV_A_SL_HL93_tandem_EL.OUT 9/11/2009

VEH: HL93- TANDEM - BRUG(5.75.44) page 61
date 11/09/2009; time 14:43:41
Cline Avenue - Load Rating - Double Box AND SINGLE BOX - 8

Summary of the results (Maximum)

Section	--- Deadload ---		----- P.T. ------		--- Live load ---	
	Moment	Ax.Frc	Moment	Ax.Frc	Moment	Ax.Frc
1 a	-7.11	0.93	0.00	0.00	0.52	0.29
1 b	-11.90	1.76	0.00	0.00	0.00	0.01
1 right	-13.25	2.00	0.00	0.00	0.00	0.01
2 left	-4.24	3.03	0.00	0.00	-0.08	0.00
2 a	-3.44	2.86	0.00	0.00	-0.07	0.00
2 b	0.28	2.09	0.00	0.00	3.44	0.07
2 c	0.31	2.12	0.00	0.00	3.83	-0.34
2 right	-7.49	3.97	0.00	0.00	0.02	0.06
3 left	-7.66	3.95	0.00	0.00	0.13	0.31
3 a	-6.62	3.70	0.00	0.00	0.21	0.27
3 b	-0.89	2.27	0.00	0.00	3.27	0.03
3 c	0.31	1.93	0.00	0.00	3.92	-0.28
3 right	-4.13	2.68	0.00	0.00	0.03	0.14
4 left	-13.50	1.60	0.00	0.00	1.38	0.04
4 a	-12.07	1.33	0.00	0.00	1.30	0.03
4 b	-2.86	-0.27	0.00	0.00	3.46	0.14
4 c	1.82	-0.87	0.00	0.00	4.69	-0.21
4 right	-0.14	0.41	0.00	0.00	1.26	0.99
5 left	-3.67	-0.26	0.00	0.00	-0.26	0.13
5 a	-2.87	-0.41	0.00	0.00	0.18	0.90
5 b	0.96	-1.01	0.00	0.00	3.59	-0.22
5 c	1.16	-0.93	0.00	0.00	3.77	-0.59
5 right	-5.04	0.83	0.00	0.00	0.19	0.00
6 left	-6.15	0.86	0.00	0.00	0.18	0.03
6 a	-5.15	0.69	0.00	0.00	0.14	0.02
6 b	-1.52	0.15	0.00	0.00	0.03	0.00
7 a	-0.50	-0.73	0.00	0.00	0.46	-0.13
7 b	-0.04	-0.31	0.00	0.00	0.39	0.07
7 c	0.93	1.39	0.00	0.00	0.00	-0.04
8 a	-2.19	0.99	0.00	0.00	0.50	-0.34
8 b	-1.52	1.20	0.00	0.00	0.38	-0.31
8 c	0.93	1.39	0.00	0.00	0.02	-0.22
9 a	-1.45	0.88	0.00	0.00	0.38	-0.65
9 b	-0.89	1.15	0.00	0.00	0.27	-0.49
9 c	0.77	1.74	0.00	0.00	0.02	-0.13
10 top	-9.01	-3.82	0.00	0.00	4.50	-2.52
10 a	-8.15	-3.33	0.00	0.00	3.50	-1.73
10 b	-5.13	-1.49	0.00	0.00	1.75	-0.88
11 top	0.16	-3.66	0.00	0.00	5.89	-2.70
11 a	0.14	-3.07	0.00	0.00	4.94	-2.40
11 b	0.06	-0.88	0.00	0.00	2.17	-1.04
12 top	9.36	-3.96	0.00	0.00	7.36	-3.26
12 a	8.46	-3.45	0.00	0.00	6.19	-2.89
12 b	5.28	-1.55	0.00	0.00	2.92	-1.75
13 top	3.52	-2.69	0.00	0.00	7.03	-2.21
13 a	2.95	-2.30	0.00	0.00	5.83	-1.62
13 b	0.96	-0.82	0.00	0.00	2.97	-0.80
14 top	1.11	-3.43	0.00	0.00	0.08	0.09
14 a	1.13	-2.96	0.00	0.00	0.08	0.09
14 b	1.21	-1.23	0.00	0.00	0.10	0.06

1_IV_A_SL_HL93_tandem_EL.OUT 9/11/2009

VEH: HL93- TANDEM - BRUG(5.75.44) page 62
date 11/09/2009; time 14:43:41
Cline Avenue - Load Rating - Double Box AND SINGLE BOX - 8

Summary of the results (Minimum)

Section	--- Deadload ---		----- P.T. ------		--- Live load ---	
	Moment	Ax.Frc	Moment	Ax.Frc	Moment	Ax.Frc
1 a	-7.11	0.93	0.00	0.00	-0.48	0.25
1 b	-11.90	1.76	0.00	0.00	-3.62	0.79
1 right	-13.25	2.00	0.00	0.00	-5.54	1.00
2 left	-4.24	3.03	0.00	0.00	-6.91	0.13
2 a	-3.44	2.86	0.00	0.00	-6.05	-0.07
2 b	0.28	2.09	0.00	0.00	-0.82	-0.22
2 c	0.31	2.12	0.00	0.00	-0.29	0.13
2 right	-7.49	3.97	0.00	0.00	-8.39	0.02
3 left	-7.66	3.95	0.00	0.00	-8.10	0.16
3 a	-6.62	3.70	0.00	0.00	-7.15	-0.05
3 b	-0.89	2.27	0.00	0.00	-1.12	-0.22
3 c	0.31	1.93	0.00	0.00	-0.38	0.26
3 right	-4.13	2.68	0.00	0.00	-6.96	0.14
4 left	-13.50	1.60	0.00	0.00	-10.18	0.25
4 a	-12.07	1.33	0.00	0.00	-9.20	0.16
4 b	-2.86	-0.27	0.00	0.00	-2.81	-0.26
4 c	1.82	-0.87	0.00	0.00	-0.19	-0.18
4 right	-0.14	0.41	0.00	0.00	-9.04	0.24
5 left	-3.67	-0.26	0.00	0.00	-6.54	-0.33
5 a	-2.87	-0.41	0.00	0.00	-5.78	-0.54
5 b	0.96	-1.01	0.00	0.00	-0.15	0.07
5 c	1.16	-0.93	0.00	0.00	-0.35	0.18
5 right	-5.04	0.83	0.00	0.00	-6.98	-0.12
6 left	-6.15	0.86	0.00	0.00	-2.24	0.51
6 a	-5.15	0.69	0.00	0.00	-1.64	0.40
6 b	-1.52	0.15	0.00	0.00	-0.29	0.08
7 a	-0.50	-0.73	0.00	0.00	-0.27	0.11
7 b	-0.04	-0.31	0.00	0.00	-0.23	0.12
7 c	0.93	1.39	0.00	0.00	-0.03	0.70
8 a	-2.19	0.99	0.00	0.00	-0.36	0.49
8 b	-1.52	1.20	0.00	0.00	-0.31	0.48
8 c	0.93	1.39	0.00	0.00	-0.04	0.79
9 a	-1.45	0.88	0.00	0.00	-0.35	0.94
9 b	-0.89	1.15	0.00	0.00	-0.27	1.00
9 c	0.77	1.74	0.00	0.00	-0.05	1.04
10 top	-9.01	-3.82	0.00	0.00	-1.84	-5.94
10 a	-8.15	-3.33	0.00	0.00	-1.58	-5.22
10 b	-5.13	-1.49	0.00	0.00	-0.71	-2.66
11 top	0.16	-3.66	0.00	0.00	-6.41	-2.71
11 a	0.14	-3.07	0.00	0.00	-5.38	-2.41
11 b	0.06	-0.88	0.00	0.00	-2.32	-1.05
12 top	9.36	-3.96	0.00	0.00	-6.04	-2.44
12 a	8.46	-3.45	0.00	0.00	-5.12	-2.14
12 b	5.28	-1.55	0.00	0.00	-2.46	-0.83
13 top	3.52	-2.69	0.00	0.00	-5.90	-3.20
13 a	2.95	-2.30	0.00	0.00	-4.90	-2.83
13 b	0.96	-0.82	0.00	0.00	-2.24	-1.70
14 top	1.11	-3.43	0.00	0.00	-4.65	-2.12
14 a	1.13	-2.96	0.00	0.00	-3.93	-1.88
14 b	1.21	-1.23	0.00	0.00	-1.98	-0.98

IV_A_SL_HL93_truck_EL.OUT 9/11/2009

VEH: HL93 TRUCK BRUG(5.75.44) page 61
date 11/09/2009; time 14:43:50
Cline Avenue - Striped Lane - Double Box AND SINGLE BOX -

Summary of the results (Maximum)

Section	--- Deadload ---		----- P.T. ------		--- Live load ---	
	Moment	Ax.Frc	Moment	Ax.Frc	Moment	Ax.Frc
1 a	-7.11	0.93	0.00	0.00	0.87	0.25
1 b	-11.90	1.76	0.00	0.00	0.06	0.17
1 right	-13.25	2.00	0.00	0.00	0.08	0.19
2 left	-4.24	3.03	0.00	0.00	-0.11	0.00
2 a	-3.44	2.86	0.00	0.00	-0.11	0.00
2 b	0.28	2.09	0.00	0.00	3.86	0.11
2 c	0.31	2.12	0.00	0.00	4.86	-0.40
2 right	-7.49	3.97	0.00	0.00	0.80	0.59
3 left	-7.66	3.95	0.00	0.00	0.59	0.43
3 a	-6.62	3.70	0.00	0.00	1.63	1.37
3 b	-0.89	2.27	0.00	0.00	3.83	0.11
3 c	0.31	1.93	0.00	0.00	5.16	-0.35
3 right	-4.13	2.68	0.00	0.00	0.61	1.60
4 left	-13.50	1.60	0.00	0.00	4.27	0.24
4 a	-12.07	1.33	0.00	0.00	4.36	1.11
4 b	-2.86	-0.27	0.00	0.00	5.04	0.19
4 c	1.82	-0.87	0.00	0.00	6.72	-0.27
4 right	-0.14	0.41	0.00	0.00	3.34	0.92
5 left	-3.67	-0.26	0.00	0.00	0.40	1.17
5 a	-2.87	-0.41	0.00	0.00	1.63	0.69
5 b	0.96	-1.01	0.00	0.00	4.40	-0.90
5 c	1.16	-0.93	0.00	0.00	4.82	-0.98
5 right	-5.04	0.83	0.00	0.00	0.08	0.01
6 left	-6.15	0.86	0.00	0.00	0.10	0.08
6 a	-5.15	0.69	0.00	0.00	0.08	0.06
6 b	-1.52	0.15	0.00	0.00	0.02	0.01
7 a	-0.50	-0.73	0.00	0.00	0.64	-0.29
7 b	-0.04	-0.31	0.00	0.00	0.55	0.47
7 c	0.93	1.39	0.00	0.00	0.03	0.37
8 a	-2.19	0.99	0.00	0.00	1.11	-0.25
8 b	-1.52	1.20	0.00	0.00	0.94	-0.08
8 c	0.93	1.39	0.00	0.00	0.05	-0.62
9 a	-1.45	0.88	0.00	0.00	0.66	-0.77
9 b	-0.89	1.15	0.00	0.00	0.53	-0.55
9 c	0.77	1.74	0.00	0.00	0.04	-0.27
10 top	-9.01	-3.82	0.00	0.00	5.53	-4.48
10 a	-8.15	-3.33	0.00	0.00	4.65	-3.82
10 b	-5.13	-1.49	0.00	0.00	2.45	-1.75
11 top	0.16	-3.66	0.00	0.00	9.36	-4.72
11 a	0.14	-3.07	0.00	0.00	7.92	-4.06
11 b	0.06	-0.88	0.00	0.00	3.81	-1.97
12 top	9.36	-3.96	0.00	0.00	12.90	-4.07
12 a	8.46	-3.45	0.00	0.00	11.10	-3.55
12 b	5.28	-1.55	0.00	0.00	5.71	-1.82
13 top	3.52	-2.69	0.00	0.00	9.66	-7.57
13 a	2.95	-2.30	0.00	0.00	8.45	-6.38
13 b	0.96	-0.82	0.00	0.00	4.68	-2.75
14 top	1.11	-3.43	0.00	0.00	0.08	0.07
14 a	1.13	-2.96	0.00	0.00	0.10	0.07
14 b	1.21	-1.23	0.00	0.00	0.16	0.08

IV_A_SL_HL93_truck_EL.OUT 9/11/2009

VEH: HL93 TRUCK BRUG(5.75.44) page 62
date 11/09/2009; time 14:43:50
Cline Avenue - Striped Lane - Double Box AND SINGLE BOX -

Summary of the results (Minimum)

Section	--- Deadload ---		----- P.T. ------		--- Live load ---	
	Moment	Ax.Frc	Moment	Ax.Frc	Moment	Ax.Frc
1 a	-7.11	0.93	0.00	0.00	-0.28	0.27
1 b	-11.90	1.76	0.00	0.00	-3.90	1.00
1 right	-13.25	2.00	0.00	0.00	-6.31	1.34
2 left	-4.24	3.03	0.00	0.00	-7.56	-0.01
2 a	-3.44	2.86	0.00	0.00	-6.37	-0.20
2 b	0.28	2.09	0.00	0.00	-1.32	-0.14
2 c	0.31	2.12	0.00	0.00	-0.49	0.26
2 right	-7.49	3.97	0.00	0.00	-10.81	-0.13
3 left	-7.66	3.95	0.00	0.00	-10.12	-0.03
3 a	-6.62	3.70	0.00	0.00	-8.73	-0.12
3 b	-0.89	2.27	0.00	0.00	-1.97	-0.05
3 c	0.31	1.93	0.00	0.00	-0.80	0.46
3 right	-4.13	2.68	0.00	0.00	-7.72	-0.31
4 left	-13.50	1.60	0.00	0.00	-14.72	0.10
4 a	-12.07	1.33	0.00	0.00	-13.16	-0.02
4 b	-2.86	-0.27	0.00	0.00	-5.05	-0.50
4 c	1.82	-0.87	0.00	0.00	-0.24	0.14
4 right	-0.14	0.41	0.00	0.00	-11.26	0.23
5 left	-3.67	-0.26	0.00	0.00	-6.81	0.10
5 a	-2.87	-0.41	0.00	0.00	-4.69	-0.83
5 b	0.96	-1.01	0.00	0.00	-0.87	0.45
5 c	1.16	-0.93	0.00	0.00	-0.64	0.34
5 right	-5.04	0.83	0.00	0.00	-8.26	-0.18
6 left	-6.15	0.86	0.00	0.00	-1.72	0.73
6 a	-5.15	0.69	0.00	0.00	-1.18	0.52
6 b	-1.52	0.15	0.00	0.00	-0.18	0.08
7 a	-0.50	-0.73	0.00	0.00	-0.67	0.37
7 b	-0.04	-0.31	0.00	0.00	-0.58	0.39
7 c	0.93	1.39	0.00	0.00	-0.05	1.24
8 a	-2.19	0.99	0.00	0.00	-0.90	0.72
8 b	-1.52	1.20	0.00	0.00	-0.78	0.67
8 c	0.93	1.39	0.00	0.00	-0.07	1.51
9 a	-1.45	0.88	0.00	0.00	-0.43	1.06
9 b	-0.89	1.15	0.00	0.00	-0.36	1.09
9 c	0.77	1.74	0.00	0.00	-0.08	1.59
10 top	-9.01	-3.82	0.00	0.00	-2.74	-6.52
10 a	-8.15	-3.33	0.00	0.00	-2.32	-5.52
10 b	-5.13	-1.49	0.00	0.00	-1.03	-2.48
11 top	0.16	-3.66	0.00	0.00	-10.79	-4.88
11 a	0.14	-3.07	0.00	0.00	-9.11	-4.19
11 b	0.06	-0.88	0.00	0.00	-4.18	-2.02
12 top	9.36	-3.96	0.00	0.00	-10.25	-4.13
12 a	8.46	-3.45	0.00	0.00	-8.81	-3.50
12 b	5.28	-1.55	0.00	0.00	-4.69	-1.53
13 top	3.52	-2.69	0.00	0.00	-8.56	-3.86
13 a	2.95	-2.30	0.00	0.00	-7.27	-3.35
13 b	0.96	-0.82	0.00	0.00	-3.65	-1.67
14 top	1.11	-3.43	0.00	0.00	-6.54	-5.00
14 a	1.13	-2.96	0.00	0.00	-5.54	-4.27
14 b	1.21	-1.23	0.00	0.00	-2.94	-1.98

IV_A_SL_HL93_tandem_EL.OUT 9/11/2009

VEH: HL93- TANDEM BRUG(5.75.44) page 61
date 11/09/2009; time 14:43:49
Cline Avenue - Load Rating - Double Box AND SINGLE BOX - 8

Summary of the results (Maximum)

Section	--- Deadload ---		----- P.T. ------		--- Live load ---	
	Moment	Ax.Frc	Moment	Ax.Frc	Moment	Ax.Frc
1 a	-7.11	0.93	0.00	0.00	0.56	0.31
1 b	-11.90	1.76	0.00	0.00	0.12	0.09
1 right	-13.25	2.00	0.00	0.00	0.15	0.10
2 left	-4.24	3.03	0.00	0.00	-0.08	0.00
2 a	-3.44	2.86	0.00	0.00	-0.07	0.00
2 b	0.28	2.09	0.00	0.00	3.44	0.07
2 c	0.31	2.12	0.00	0.00	4.66	-0.43
2 right	-7.49	3.97	0.00	0.00	0.71	0.35
3 left	-7.66	3.95	0.00	0.00	0.13	0.31
3 a	-6.62	3.70	0.00	0.00	0.21	0.27
3 b	-0.89	2.27	0.00	0.00	3.37	0.06
3 c	0.31	1.93	0.00	0.00	4.86	-0.36
3 right	-4.13	2.68	0.00	0.00	0.04	0.14
4 left	-13.50	1.60	0.00	0.00	2.99	0.10
4 a	-12.07	1.33	0.00	0.00	2.80	0.09
4 b	-2.86	-0.27	0.00	0.00	4.15	0.12
4 c	1.82	-0.87	0.00	0.00	6.46	-0.36
4 right	-0.14	0.41	0.00	0.00	1.26	0.99
5 left	-3.67	-0.26	0.00	0.00	-0.26	0.13
5 a	-2.87	-0.41	0.00	0.00	0.18	0.90
5 b	0.96	-1.01	0.00	0.00	3.92	-0.69
5 c	1.16	-0.93	0.00	0.00	4.51	-0.83
5 right	-5.04	0.83	0.00	0.00	0.21	0.00
6 left	-6.15	0.86	0.00	0.00	0.22	0.03
6 a	-5.15	0.69	0.00	0.00	0.17	0.03
6 b	-1.52	0.15	0.00	0.00	0.03	0.00
7 a	-0.50	-0.73	0.00	0.00	0.46	-0.13
7 b	-0.04	-0.31	0.00	0.00	0.39	0.07
7 c	0.93	1.39	0.00	0.00	0.02	0.27
8 a	-2.19	0.99	0.00	0.00	0.85	-0.47
8 b	-1.52	1.20	0.00	0.00	0.69	-0.19
8 c	0.93	1.39	0.00	0.00	0.04	-0.30
9 a	-1.45	0.88	0.00	0.00	0.61	-0.82
9 b	-0.89	1.15	0.00	0.00	0.45	-0.55
9 c	0.77	1.74	0.00	0.00	0.03	-0.16
10 top	-9.01	-3.82	0.00	0.00	5.81	-3.45
10 a	-8.15	-3.33	0.00	0.00	4.81	-3.88
10 b	-5.13	-1.49	0.00	0.00	2.39	-1.96
11 top	0.16	-3.66	0.00	0.00	8.35	-3.67
11 a	0.14	-3.07	0.00	0.00	7.04	-3.26
11 b	0.06	-0.88	0.00	0.00	3.31	-2.23
12 top	9.36	-3.96	0.00	0.00	11.55	-4.57
12 a	8.46	-3.45	0.00	0.00	9.82	-4.05
12 b	5.28	-1.55	0.00	0.00	4.85	-2.11
13 top	3.52	-2.69	0.00	0.00	7.84	-7.35
13 a	2.95	-2.30	0.00	0.00	6.78	-6.45
13 b	0.96	-0.82	0.00	0.00	3.63	-3.22
14 top	1.11	-3.43	0.00	0.00	0.11	0.11
14 a	1.13	-2.96	0.00	0.00	0.11	0.10
14 b	1.21	-1.23	0.00	0.00	0.15	0.08

IV_A_SL_HL93_tandem_EL.OUT 9/11/2009

VEH: HL93- TANDEM BRUG(5.75.44) page 62
date 11/09/2009; time 14:43:49
Cline Avenue - Load Rating - Double Box AND SINGLE BOX - 8

Summary of the results (Minimum)

Section	--- Deadload ---		----- P.T. ------		--- Live load ---	
	Moment	Ax.Frc	Moment	Ax.Frc	Moment	Ax.Frc
1 a	-7.11	0.93	0.00	0.00	-0.53	0.43
1 b	-11.90	1.76	0.00	0.00	-4.99	1.18
1 right	-13.25	2.00	0.00	0.00	-7.38	1.47
2 left	-4.24	3.03	0.00	0.00	-9.60	1.24
2 a	-3.44	2.86	0.00	0.00	-7.62	0.96
2 b	0.28	2.09	0.00	0.00	-1.13	-0.22
2 c	0.31	2.12	0.00	0.00	-0.42	0.22
2 right	-7.49	3.97	0.00	0.00	-11.54	1.00
3 left	-7.66	3.95	0.00	0.00	-10.99	1.19
3 a	-6.62	3.70	0.00	0.00	-9.19	0.60
3 b	-0.89	2.27	0.00	0.00	-1.47	-0.02
3 c	0.31	1.93	0.00	0.00	-0.65	0.47
3 right	-4.13	2.68	0.00	0.00	-9.30	1.32
4 left	-13.50	1.60	0.00	0.00	-14.98	0.19
4 a	-12.07	1.33	0.00	0.00	-13.42	0.07
4 b	-2.86	-0.27	0.00	0.00	-4.24	-0.47
4 c	1.82	-0.87	0.00	0.00	-0.21	0.10
4 right	-0.14	0.41	0.00	0.00	-12.67	0.29
5 left	-3.67	-0.26	0.00	0.00	-8.89	0.50
5 a	-2.87	-0.41	0.00	0.00	-6.61	0.07
5 b	0.96	-1.01	0.00	0.00	-0.92	0.49
5 c	1.16	-0.93	0.00	0.00	-0.58	0.31
5 right	-5.04	0.83	0.00	0.00	-8.79	-0.10
6 left	-6.15	0.86	0.00	0.00	-2.50	0.75
6 a	-5.15	0.69	0.00	0.00	-1.83	0.58
6 b	-1.52	0.15	0.00	0.00	-0.33	0.11
7 a	-0.50	-0.73	0.00	0.00	-0.49	0.25
7 b	-0.04	-0.31	0.00	0.00	-0.42	0.26
7 c	0.93	1.39	0.00	0.00	-0.04	1.23
8 a	-2.19	0.99	0.00	0.00	-0.66	0.64
8 b	-1.52	1.20	0.00	0.00	-0.57	0.62
8 c	0.93	1.39	0.00	0.00	-0.06	1.42
9 a	-1.45	0.88	0.00	0.00	-0.35	0.94
9 b	-0.89	1.15	0.00	0.00	-0.27	1.00
9 c	0.77	1.74	0.00	0.00	-0.06	1.63
10 top	-9.01	-3.82	0.00	0.00	-1.84	-5.94
10 a	-8.15	-3.33	0.00	0.00	-1.58	-5.22
10 b	-5.13	-1.49	0.00	0.00	-0.71	-2.66
11 top	0.16	-3.66	0.00	0.00	-9.45	-4.77
11 a	0.14	-3.07	0.00	0.00	-7.94	-4.23
11 b	0.06	-0.88	0.00	0.00	-3.56	-2.28
12 top	9.36	-3.96	0.00	0.00	-8.91	-3.23
12 a	8.46	-3.45	0.00	0.00	-7.61	-2.83
12 b	5.28	-1.55	0.00	0.00	-3.90	-1.82
13 top	3.52	-2.69	0.00	0.00	-8.61	-4.44
13 a	2.95	-2.30	0.00	0.00	-7.23	-3.93
13 b	0.96	-0.82	0.00	0.00	-3.45	-2.02
14 top	1.11	-3.43	0.00	0.00	-6.30	-4.70
14 a	1.13	-2.96	0.00	0.00	-5.32	-4.14
14 b	1.21	-1.23	0.00	0.00	-2.68	-2.13

4.9 3D Analysis Section VA

URS

Page 49/1 of ____

Job CLINE AVENUE LOAD RATING | Project No. ____ | Sheet ____ of ____

Description TRANSVERSE ANALYSIS | Computed by PT | Date 1/12/09

Checked by [illegible] | Date 1/16/09

Reference

CASE IA SINGLE BOX – 28'-4" Ramps

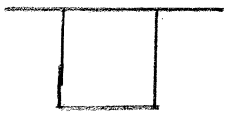

4.9.1 Brug Model

BRUG SECTIONS

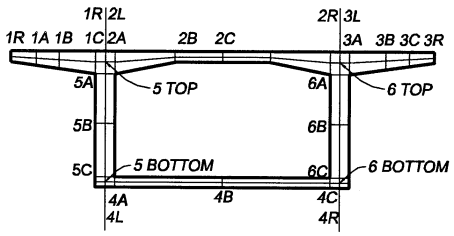

Sokem
01/16/09

49.1/1

HALF SIZE PRINT - 11x17	Designed by		URS Corporation Southern 7650 Corporate Center Drive Suite 400 Miami, FL 33126-1220 Tel. (305) 262-7485 C.A. No. EB 0000002	TYPICAL SECTION - Transverse Analysis		SECTION VA
No. Date App. Revisions	Drawn by R.V.A.					
	Checked by					
	DRAWING SCALE:					

URS

corbis_material 1/16/2009 9:12:27 AM

NAME P.C. NO. SFBLBLB

DRAWING NO. SHEET NO.

BRUG MODEL

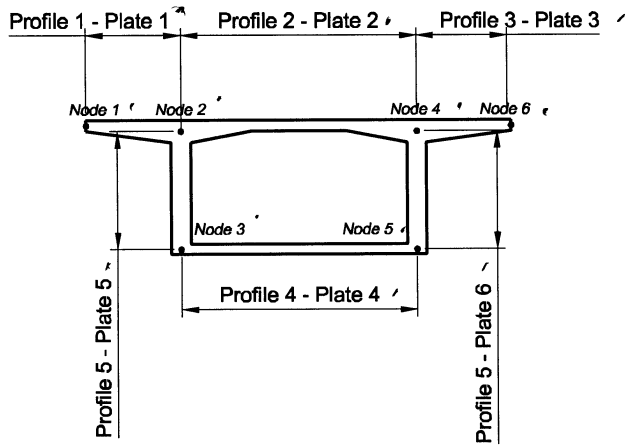

DEM
1/16/09

4.9.1/2

HALF SIZE PRINT - 11x17	Designed by		
	Drawn by R.V.A.	URS Corporation Southern 7650 Corporate Center Drive Suite 400 Miami, FL 33126-1220 Tel: (305) 262-7485 C.A. No. ER 00000002	TYPICAL SECTION - Transverse Analysis
	Checked by		
	DRAWING SCALE:		
No. Date App. Revisions			

SECTION VA

DRAWING NO. (I-E/T NO.)

NAME FC NO.

SFILE.E

pdf/dwg_transfer 1/14/2009 10:34:00 AM

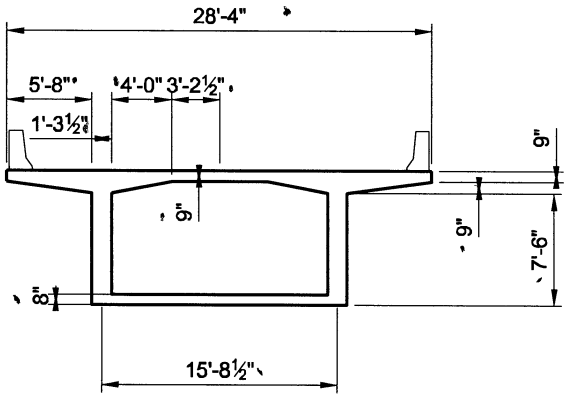

DIMENSIONS

VDeW
01/16/09

4.9.1/3

HALF SIZE PRINT - 11x17

Designed by
Drawn by R.V.A.
Checked by
DRAWING SCALE:

URS
URS Corporation Southern
7650 Corporate Center Drive
Suite 400
Miami, FL 33126-1220
Tel: (305) 262-7485
C.A. No. EB 00000002

TYPICAL SECTION - Transverse Analysis

SECTION VA

DRAWING NO.
SHEET NO.
NAME P.E. NO.
STILES

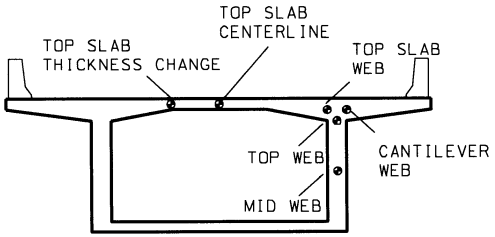

RATING POINTS

JDKK
01/16/09

4.9.1/4

HALF SIZE PRINT - 11x17

Designed by
Drawn by R.V.A.
Checked by
DRAWING SCALE

URS Corporation Southern
7650 Corporate Center Drive
Suite 400
Miami, FL 33126-1220
Tel: (305) 262-7485
C.A. No. EB 00000002

TYPICAL SECTION - Transverse Analysis

SECTION VA

DRAWING NO.
SHEET NO.
NAME PT. NO.
SFLS1
1/16/2009 7:10:40 AM

URS CORPORATION	Made by:	PT	Date: 12-Jan-09	Job Number: 25626272.00001
	Checked by:	Drm	Date: 1/16/09	Sheet Number:
Brug Joints and Members	Backchecked by:		Date:	

V:\Projects\Cline Avenue\Load Rating Analysis\Transverse Analysis\Spreadsheet\[Brug Input.xls]Model_Joints Brugh_V_A

Data measured from Microstation File

V:\Projects\Cline Avenue\Load Rating Analysis\Transverse Analysis\Spreadsheet\[Brug Input.xls]Model_Joints Brugh_V_A

* Average areas and average moment of Inertia were used on the GTSTRUDL verification

GTStrudl Joint	X ft	Y ft	Length ft	Height ft	Area* ft	IZ* ft
1	0.0000	8.2500	1.667	0.750	0.860	0.053
2	1.6667	8.2500	1.569	0.971	1.074	0.103
3	3.2360	8.2500	2.431	1.178	1.339	0.200
4	5.6667	8.2500	0.646	1.500	1.500	0.281
5	6.3125	8.2500	0.646	1.500	1.500	0.281
6	6.9583	8.2500	4.000	1.500	1.125	0.119
7	10.9583	8.2500	3.208	0.750	0.750	0.035
8	14.1667	8.2500	3.208	0.750	0.750	0.035
9	17.3750	8.2500	4.000	0.750	1.125	0.119
10	21.3750	8.2500	0.646	1.500	1.500	0.281
11	22.0208	8.2500	0.646	1.500	1.500	0.281
12	22.6667	8.2500	2.430	1.500	1.339	0.200
13	25.0971	8.2500	1.570	1.178	1.074	0.103
14	26.6667	8.2500	1.667	0.971	0.860	0.053
15	28.3333	8.2500	0.750	0.750	1.292	0.180
16	6.3125	7.5000	3.292	1.292	1.292	0.180
17	6.3125	4.2083	3.542	1.292	1.292	0.180
18	6.3125	0.6667	0.333	1.292	1.292	0.180
19	6.3125	0.3333	0.646	1.292	0.667	0.025
20	6.9583	0.3333	7.208	0.667	0.667	0.025
21	14.1667	0.3333	7.208	0.667	0.667	0.025
22	21.3750	0.3333	0.646	0.667	0.667	0.025
23	22.0208	0.3333	0.333	0.667	1.292	0.180
24	22.0208	0.6667	3.542	1.292	1.292	0.180
25	22.0208	4.2083	3.292	1.292	1.292	0.180
26	22.0208	7.5000	0.750	1.292	1.292	0.180

LEFT CANTILEVER

GT Joint	Brug Section	Brug Joint	Length	Height
1	1L	1	0.000	0.750
2	1A	2	1.667	0.971
3	1B	3	3.236	1.178
4	1C	4	5.667	1.500
5	1R	5	6.313	1.500

CENTER SPAN

GT Joint	Brug Section	Brug Joint	Length	Height
5	2L	1	0.000	1.500
6	2A	2	0.646	1.500
7	2B	3	4.646	0.750
8	2C	4	7.854	0.750
9		5	11.063	0.750
10		6	15.063	1.500
11	2R	7	15.708	1.500

RIGHT CANTILEVER

GT Joint	Brug Section	Brug Joint	Length	Height
11	3L	1	0.000	1.500
12	3A	2	0.646	1.500
13	3B	3	3.076	1.178
14	3C	4	4.646	0.971
15	3R	5	6.313	0.750

Bottom Slab

GT Joint	Brug Section	Brug Joint	Length	Height
19	4L	1	0.000	0.667
20	4A	2	0.646	0.667
21	4B	3	7.854	0.667
22	4C	4	15.063	0.667
23	4R	5	15.708	0.667

WEB

GT Joint	Brug Section	Brug Joint	Length	Height
5	5-6 Top	1	0.000	1.292
16	5-6 A	2	0.750	1.292
17	5-6 B	3	4.042	1.292
18	5-6 C	4	7.583	1.292
19	5-6 Abottom	5	7.917	1.292

4.9.1/5

TRUCK LOCATION - NO TRAFFIC ON SHOULDERS (ONE LANE ONLY)

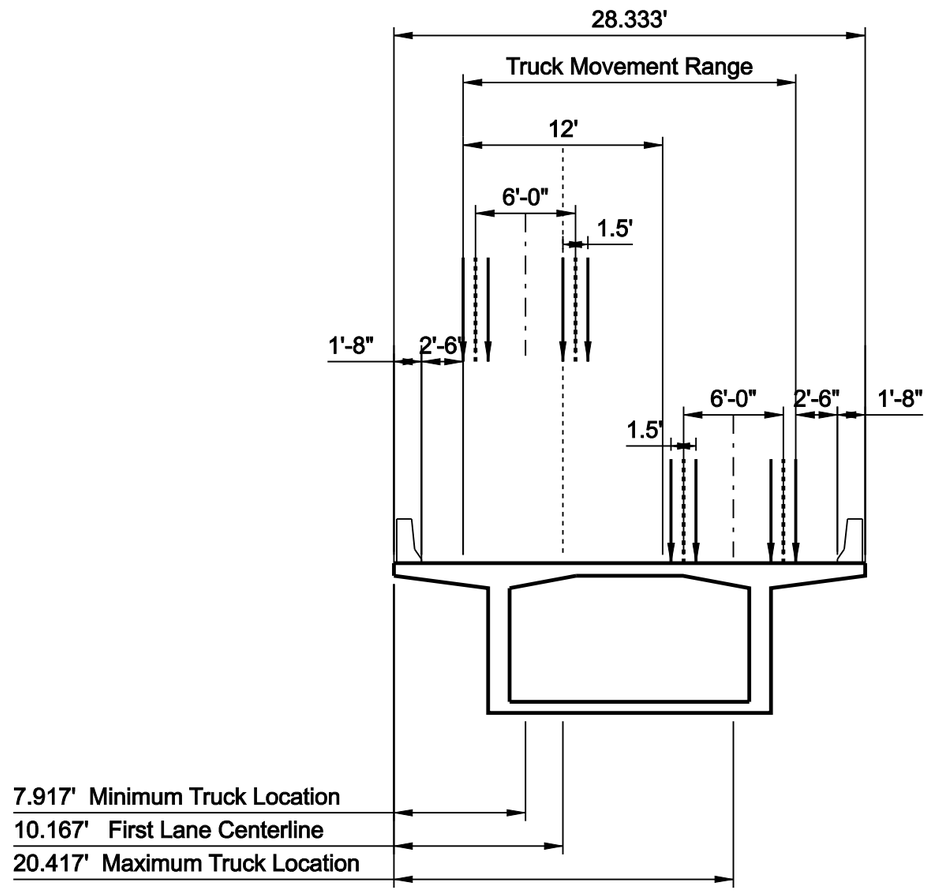

Design by: PT 9/09
Independent Check by: RJB 9/09

HALF SIZE PRINT - 11x17

No.	Date	App.	Revisions

Designed by -
Drawn by R.V.A.
Checked by -
DRAWING SCALE

URS Corporation Southern
7650 Corporate Center Drive
Suite 400
Miami, FL 33126-1220
Tel: (305) 262-7466
C.A. No. EB 00000002

TYPICAL SECTION - Transverse Analysis

SECTION VA

DRAWING NO. -
SHEET NO. -

patricia_thweatt 7/02/2009 7:46:12 AM

4.9.1/ 6

4.9.2 Brug Input AASHTO Lanes

```
* start ; column 11-30 can be used to have your own text on the top of each page
*   5   10   15   20   25   30   35   40   45   50   55   60   65   70   75   80
*   V    V    V    V    V    V    V    V    V    V    V    V    V    V    V    V
00001  1 1     VEH: HL93- TRUCK - SINGLE TRUCK
* code 1001
Cline Avenue - Striped Lanes - Single Box 28'-4" Wide
* code 1002
    2         1
* code 1003
*   5   10   15   20   25   30   35   40   45   50   55   60   65   70   75   80
*   V    V    V    V    V    V    V    V    V    V    V    V    V    V    V    V
250.0      122.0      28.33    1.0       1.0       1.3
* code 1004
    1    0    2
* code 1005
   72    1
* code 1005a
* location traffic lanes
10.167
* maximum and minimum truck
7.917     16.417    0.000
* code 1007, linear loads
0.7350    0.441
27.5983   0.441
* code 1201
    6    5    3    1    2
* code 1202 coordinates
 0.0000   8.2500
 6.3125   8.2500
 6.3125   0.3333
22.0208   8.2500
22.0208   0.3333
28.3333   8.2500
* code 1203 - profile 1
    5    2    3    4
0.000     0.750
1.667     0.971
3.236     1.178
5.667     1.500
6.313     1.500
* code 1203 - profile 2
    7    2    3    4
0.000     1.500
0.646     1.500
4.646     0.750
7.854     0.750
11.063    0.750
15.063    1.500
15.708    1.500
* code 1203 - profile 3
    5    2    3    4
0.000     1.500
0.646     1.500
3.076     1.178
4.646     0.971
6.313     0.750
* code 1203 - profile 4
    5    2    3    4
0.000     0.667
0.646     0.667
7.854     0.667
15.063    0.667
15.708    0.667
* code 1203 - profile 5
    5    2    3    4
0.000     1.292
0.750     1.292
4.042     1.292
7.583     1.292
7.917     1.292
* code 1204 - assembling boxgirder
    1    2    1
    2    4    2
    4    6    3
    3    5    4
    2    3    5
    4    5    5
* code 1205 control code
    1    2   13    1    1    0    4    3     1.0       1.0
* code 1206 wheels/axle
       0.0
```

```
       1.5
       6.0
       7.5 0.833
* code 1207 definition axles
0.0       0.1
14.0      0.4
28.0      0.4
* code 1208 - accuracy
0.00001   0.00001   0.00001   .00001    .00001
* code 1209 number sections
   29
* code definition sections
   1A   1B   1C   1R   2L   2A   2B   2C   2R   3L   3A   3B   3C   3R   4L   4A
   4B   4C   4R   5L   5A   5B   5C   5R   6L   6A   6B   6C   6R
* code 1210 - density conrete
0.156
* code 1211 - extra forces selfweight

* code 1212 - surcharge
0.7083
* code 1213 - Prestressing Layout - NONE
```

```
* start ; column 11-30 can be used to have your own text on the top of each page
*   5   10   15   20   25   30   35   40   45   50   55   60   65   70   75   80
*   V    V    V    V    V    V    V    V    V    V    V    V    V    V    V    V
00001  1 1     VEH: HL93- TANDEM - SINGLE TRUCK
* code 1001
Cline Avenue - Striped Lanes - Single Box 28'-4" Wide
* code 1002
    2         1
* code 1003
*   5   10   15   20   25   30   35   40   45   50   55   60   65   70   75   80
*   V    V    V    V    V    V    V    V    V    V    V    V    V    V    V    V
250.0      122.0      28.33    1.0       1.0       1.3
* code 1004
    1    0    2
* code 1005
   50    1
* code 1005a
* location traffic lanes
10.167
* maximum and minimum truck
7.917     16.417    0.000
* code 1007, linear loads
0.7350    0.441
27.5983   0.441
* code 1201
    6    5    3    1    2
* code 1202 coordinates
 0.0000   8.2500
 6.3125   8.2500
 6.3125   0.3333
22.0208   8.2500
22.0208   0.3333
28.3333   8.2500
* code 1203 - profile 1
    5    2    3    4
0.000     0.750
1.667     0.971
3.236     1.178
5.667     1.500
6.313     1.500
* code 1203 - profile 2
    7    2    3    4
0.000     1.500
0.646     1.500
4.646     0.750
7.854     0.750
11.063    0.750
15.063    1.500
15.708    1.500
* code 1203 - profile 3
    5    2    3    4
0.000     1.500
0.646     1.500
3.076     1.178
4.646     0.971
6.313     0.750
* code 1203 - profile 4
    5    2    3    4
0.000     0.667
0.646     0.667
7.854     0.667
15.063    0.667
15.708    0.667
* code 1203 - profile 5
    5    2    3    4
0.000     1.292
0.750     1.292
4.042     1.292
7.583     1.292
7.917     1.292
* code 1204 - assembling boxgirder
    1    2    1
    2    4    2
    4    6    3
    3    5    4
    2    3    5
    4    5    5
* code 1205 control code
    1    2   13    1    1    0    4    2     1.0       1.0
* code 1206 wheels/axle
       0.0
```

1V_A_SL_HL93_tandem_EL.txt 9/11/2009

```
       1.5
       6.0
       7.5 0.833
* code 1207 definition axles
0.0       0.5
4.0       0.5
* code 1208 - accuracy
0.00001   0.00001   0.00001   .00001    .00001
* code 1209 number sections
   29
* code definition sections
   1A   1B   1C   1R   2L   2A   2B   2C   2R   3L   3A   3B   3C   3R   4L   4A
   4B   4C   4R   5L   5A   5B   5C   5R   6L   6A   6B   6C   6R
* code 1210 - density conrete
0.156
* code 1211 - extra forces selfweight

* code 1212 - surcharge
0.7083
* code 1213 - Prestressing Layout - NONE
```

```
* start ; column 11-30 can be used to have your own text on the top of each page
*   5   10   15   20   25   30   35   40   45   50   55   60   65   70   75   80
*   V    V    V    V    V    V    V    V    V    V    V    V    V    V    V    V
00001  1 1     VEH: R1 - TOLL ROAD LOADING No. 1  - SINGLE TRUCK
* code 1001
Cline Avenue - Striped Lanes - Single Box 28'-4" Wide
* code 1002
    2         1
* code 1003
*   5   10   15   20   25   30   35   40   45   50   55   60   65   70   75   80
*   V    V    V    V    V    V    V    V    V    V    V    V    V    V    V    V
250.0      122.0      28.33    1.0       1.0       1.3
* code 1004
    1    0    2
* code 1005
   90    1
* code 1005a
* location traffic lanes
10.167
* maximum and minimum truck
7.917     16.417    0.000
* code 1007, linear loads
0.7350    0.441
27.5983   0.441
* code 1201
    6    5    3    1    2
* code 1202 coordinates
 0.0000   8.2500
 6.3125   8.2500
 6.3125   0.3333
22.0208   8.2500
22.0208   0.3333
28.3333   8.2500
* code 1203 - profile 1
    5    2    3    4
0.000     0.750
1.667     0.971
3.236     1.178
5.667     1.500
6.313     1.500
* code 1203 - profile 2
    7    2    3    4
0.000     1.500
0.646     1.500
4.646     0.750
7.854     0.750
11.063    0.750
15.063    1.500
15.708    1.500
* code 1203 - profile 3
    5    2    3    4
0.000     1.500
0.646     1.500
3.076     1.178
4.646     0.971
6.313     0.750
* code 1203 - profile 4
    5    2    3    4
0.000     0.667
0.646     0.667
7.854     0.667
15.063    0.667
15.708    0.667
* code 1203 - profile 5
    5    2    3    4
0.000     1.292
0.750     1.292
4.042     1.292
7.583     1.292
7.917     1.292
* code 1204 - assembling boxgirder
    1    2    1
    2    4    2
    4    6    3
    3    5    4
    2    3    5
    4    5    5
* code 1205 control code
    1    2   13    1    1    0    4    5     1.0       1.0
* code 1206 wheels/axle
       0.0
```

```
       1.5
       6.0
       7.5 0.833
* code 1207 definition axles
0.00      18.00
10.00     18.00
14.00     18.00
24.00     18.00
28.00     18.00
* code 1208 - accuracy
0.00001   0.00001   0.00001   .00001    .00001
* code 1209 number sections
   29
* code definition sections
   1A   1B   1C   1R   2L   2A   2B   2C   2R   3L   3A   3B   3C   3R   4L   4A
   4B   4C   4R   5L   5A   5B   5C   5R   6L   6A   6B   6C   6R
* code 1210 - density conrete
0.156
* code 1211 - extra forces selfweight

* code 1212 - surcharge
0.7083
* code 1213 - Prestressing Layout - NONE
```

```
* start ; column 11-30 can be used to have your own text on the top of each page
*   5   10   15   20   25   30   35   40   45   50   55   60   65   70   75   80
*   V    V    V    V    V    V    V    V    V    V    V    V    V    V    V    V
00001  1 1     VEH: R2 - TOLL ROAD LOADING No. 2 - SINGLE TRUCK
* code 1001
Cline Avenue - Striped Lanes - Single Box 28'-4" Wide
* code 1002
    2         1
* code 1003
*   5   10   15   20   25   30   35   40   45   50   55   60   65   70   75   80
*   V    V    V    V    V    V    V    V    V    V    V    V    V    V    V    V
250.0      122.0      28.33    1.0       1.0       1.3
* code 1004
    1    0    2
* code 1005
   90    1
* code 1005a
* location traffic lanes
10.167
* maximum and minimum truck
7.917     16.417    0.000
* code 1007, linear loads
0.7350    0.441
27.5983   0.441
* code 1201
    6    5    3    1    2
* code 1202 coordinates
 0.0000   8.2500
 6.3125   8.2500
 6.3125   0.3333
22.0208   8.2500
22.0208   0.3333
28.3333   8.2500
* code 1203 - profile 1
    5    2    3    4
0.000     0.750
1.667     0.971
3.236     1.178
5.667     1.500
6.313     1.500
* code 1203 - profile 2
    7    2    3    4
0.000     1.500
0.646     1.500
4.646     0.750
7.854     0.750
11.063    0.750
15.063    1.500
15.708    1.500
* code 1203 - profile 3
    5    2    3    4
0.000     1.500
0.646     1.500
3.076     1.178
4.646     0.971
6.313     0.750
* code 1203 - profile 4
    5    2    3    4
0.000     0.667
0.646     0.667
7.854     0.667
15.063    0.667
15.708    0.667
* code 1203 - profile 5
    5    2    3    4
0.000     1.292
0.750     1.292
4.042     1.292
7.583     1.292
7.917     1.292
* code 1204 - assembling boxgirder
    1    2    1
    2    4    2
    4    6    3
    3    5    4
    2    3    5
    4    5    5
* code 1205 control code
    1    2   13    1    1    0    4    4     1.0       1.0
* code 1206 wheels/axle
       0.0
```

1V_A_SL_R2_EL.txt 9/11/2009

```
       1.5
       6.0
       7.5 0.833
* code 1207 definition axles
0.00      22.50
14.00     22.50
23.00     22.50
37.00     22.50
* code 1208 - accuracy
0.00001   0.00001   0.00001   .00001    .00001
* code 1209 number sections
   29
* code definition sections
   1A   1B   1C   1R   2L   2A   2B   2C   2R   3L   3A   3B   3C   3R   4L   4A
   4B   4C   4R   5L   5A   5B   5C   5R   6L   6A   6B   6C   6R
* code 1210 - density conrete
0.156
* code 1211 - extra forces selfweight

* code 1212 - surcharge
0.7083
* code 1213 - Prestressing Layout - NONE
```

```
* start ; column 11-30 can be used to have your own text on the top of each page
*   5   10   15   20   25   30   35   40   45   50   55   60   65   70   75   80
*   V    V    V    V    V    V    V    V    V    V    V    V    V    V    V    V
00001  1 1     VEH: R3 - TOLL ROAD LOADING No. 3 - SINGLE TRUCK
* code 1001
Cline Avenue - Striped Lanes - Single Box 28'-4" Wide
* code 1002
    2         1
* code 1003
*   5   10   15   20   25   30   35   40   45   50   55   60   65   70   75   80
*   V    V    V    V    V    V    V    V    V    V    V    V    V    V    V    V
250.0      122.0      28.33    1.0       1.0       1.3
* code 1004
    1    0    2
* code 1005
  126    1
* code 1005a
* location traffic lanes
10.167
* maximum and minimum truck
7.917     16.417    0.000
* code 1007, linear loads
0.7350    0.441
27.5983   0.441
* code 1201
    6    5    3    1    2
* code 1202 coordinates
 0.0000   8.2500
 6.3125   8.2500
 6.3125   0.3333
22.0208   8.2500
22.0208   0.3333
28.3333   8.2500
* code 1203 - profile 1
    5    2    3    4
0.000     0.750
1.667     0.971
3.236     1.178
5.667     1.500
6.313     1.500
* code 1203 - profile 2
    7    2    3    4
0.000     1.500
0.646     1.500
4.646     0.750
7.854     0.750
11.063    0.750
15.063    1.500
15.708    1.500
* code 1203 - profile 3
    5    2    3    4
0.000     1.500
0.646     1.500
3.076     1.178
4.646     0.971
6.313     0.750
* code 1203 - profile 4
    5    2    3    4
0.000     0.667
0.646     0.667
7.854     0.667
15.063    0.667
15.708    0.667
* code 1203 - profile 5
    5    2    3    4
0.000     1.292
0.750     1.292
4.042     1.292
7.583     1.292
7.917     1.292
* code 1204 - assembling boxgirder
    1    2    1
    2    4    2
    4    6    3
    3    5    4
    2    3    5
    4    5    5
* code 1205 control code
    1    2   13    1    1    0    4    7     1.0       1.0
* code 1206 wheels/axle
       0.0
```

1V_A_SL_R3_EL.txt 9/11/2009

```
       1.5
       6.0
       7.5 0.833
* code 1207 definition axles
0.00      18.00
10.00     18.00
14.00     18.00
40.00     18.00
44.00     18.00
56.00     18.00
76.00     18.00
* code 1208 - accuracy
0.00001   0.00001   0.00001   .00001    .00001
* code 1209 number sections
   29
* code definition sections
   1A   1B   1C   1R   2L   2A   2B   2C   2R   3L   3A   3B   3C   3R   4L   4A
   4B   4C   4R   5L   5A   5B   5C   5R   6L   6A   6B   6C   6R
* code 1210 - density conrete
0.156
* code 1211 - extra forces selfweight

* code 1212 - surcharge
0.7083
* code 1213 - Prestressing Layout - NONE
```

```
* start ; column 11-30 can be used to have your own text on the top of each page
*   5   10   15   20   25   30   35   40   45   50   55   60   65   70   75   80
*   V    V    V    V    V    V    V    V    V    V    V    V    V    V    V    V
00001  1 1     VEH: R4 - MICHIGAN TRUCK TRAIN No.5 - SINGLE TRUCK
* code 1001
Cline Avenue - Striped Lanes - Single Box 28'-4" Wide
* code 1002
    2         1
* code 1003
*   5   10   15   20   25   30   35   40   45   50   55   60   65   70   75   80
*   V    V    V    V    V    V    V    V    V    V    V    V    V    V    V    V
250.0      122.0      28.33    1.0       1.0       1.3
* code 1004
    1    0    2
* code 1005
  134    1
* code 1005a
* location traffic lanes
10.167
* maximum and minimum truck
7.917     16.417    0.000
* code 1007, linear loads
0.7350    0.441
27.5983   0.441
* code 1201
    6    5    3    1    2
* code 1202 coordinates
 0.0000   8.2500
 6.3125   8.2500
 6.3125   0.3333
22.0208   8.2500
22.0208   0.3333
28.3333   8.2500
* code 1203 - profile 1
    5    2    3    4
0.000     0.750
1.667     0.971
3.236     1.178
5.667     1.500
6.313     1.500
* code 1203 - profile 2
    7    2    3    4
0.000     1.500
0.646     1.500
4.646     0.750
7.854     0.750
11.063    0.750
15.063    1.500
15.708    1.500
* code 1203 - profile 3
    5    2    3    4
0.000     1.500
0.646     1.500
3.076     1.178
4.646     0.971
6.313     0.750
* code 1203 - profile 4
    5    2    3    4
0.000     0.667
0.646     0.667
7.854     0.667
15.063    0.667
15.708    0.667
* code 1203 - profile 5
    5    2    3    4
0.000     1.292
0.750     1.292
4.042     1.292
7.583     1.292
7.917     1.292
* code 1204 - assembling boxgirder
    1    2    1
    2    4    2
    4    6    3
    3    5    4
    2    3    5
    4    5    5
* code 1205 control code
    1    2   13    1    1    0    4    8     1.0       1.0
* code 1206 wheels/axle
       0.0
```

1V_A_SL_R4_EL.txt 9/11/2009

```
       1.5
       6.0
       7.5 0.833
* code 1207 definition axles
0.00      12.00
9.00      16.00
12.50     16.00
21.50     18.00
30.50     18.00
39.50     18.00
48.50     18.00
57.50     18.00
* code 1208 - accuracy
0.00001   0.00001   0.00001   .00001    .00001
* code 1209 number sections
   29
* code definition sections
   1A   1B   1C   1R   2L   2A   2B   2C   2R   3L   3A   3B   3C   3R   4L   4A
   4B   4C   4R   5L   5A   5B   5C   5R   6L   6A   6B   6C   6R
* code 1210 - density conrete
0.156
* code 1211 - extra forces selfweight

* code 1212 - surcharge
0.7083
* code 1213 - Prestressing Layout - NONE
```

```
* start ; column 11-30 can be used to have your own text on the top of each page
*   5   10   15   20   25   30   35   40   45   50   55   60   65   70   75   80
*   V    V    V    V    V    V    V    V    V    V    V    V    V    V    V    V
00001  1 1     VEH: R5 - MICHIGAN TRUCK TRAIN No. 8
* code 1001
Cline Avenue - Striped Lanes - Single Box 28'-4" Wide
* code 1002
    2         1
* code 1003
*   5   10   15   20   25   30   35   40   45   50   55   60   65   70   75   80
*   V    V    V    V    V    V    V    V    V    V    V    V    V    V    V    V
250.0      122.0      28.33    1.0       1.0       1.3
* code 1004
    1    0    2
* code 1005
* Vehicle weight is 134.2 Kips, rounded to 135
  135    1
* code 1005a
* location traffic lanes
10.167
* maximum and minimum truck
7.917     16.417    0.000
* code 1007, linear loads
0.7350    0.441
27.5983   0.441
* code 1201
    6    5    3    1    2
* code 1202 coordinates
 0.0000   8.2500
 6.3125   8.2500
 6.3125   0.3333
22.0208   8.2500
22.0208   0.3333
28.3333   8.2500
* code 1203 - profile 1
    5    2    3    4
0.000     0.750
1.667     0.971
3.236     1.178
5.667     1.500
6.313     1.500
* code 1203 - profile 2
    7    2    3    4
0.000     1.500
0.646     1.500
4.646     0.750
7.854     0.750
11.063    0.750
15.063    1.500
15.708    1.500
* code 1203 - profile 3
    5    2    3    4
0.000     1.500
0.646     1.500
3.076     1.178
4.646     0.971
6.313     0.750
* code 1203 - profile 4
    5    2    3    4
0.000     0.667
0.646     0.667
7.854     0.667
15.063    0.667
15.708    0.667
* code 1203 - profile 5
    5    2    3    4
0.000     1.292
0.750     1.292
4.042     1.292
7.583     1.292
7.917     1.292
* code 1204 - assembling boxgirder
    1    2    1
    2    4    2
    4    6    3
    3    5    4
    2    3    5
    4    5    5
* code 1205 control code
    1    2   13    1    1    0    4   11     1.0       1.0
* code 1206 wheels/axle
```

1V_A_SL_R5_EL.txt 9/11/2009

```
       0.0
       1.5
       6.0
       7.5 0.833
* code 1207 definition axles
0.00      12.00
9.00      13.40
12.50     13.40
21.50     10.90
25.00     10.90
28.50     10.90
32.00     10.90
35.50     10.90
39.00     10.90
48.00     15.00
57.00     15.00
* code 1208 - accuracy
0.00001   0.00001   0.00001   .00001    .00001
* code 1209 number sections
   29
* code definition sections
   1A   1B   1C   1R   2L   2A   2B   2C   2R   3L   3A   3B   3C   3R   4L   4A
   4B   4C   4R   5L   5A   5B   5C   5R   6L   6A   6B   6C   6R
* code 1210 - density conrete
0.156
* code 1211 - extra forces selfweight

* code 1212 - surcharge
0.7083
* code 1213 - Prestressing Layout - NONE
```

```
* start ; column 11-30 can be used to have your own text on the top of each page
*   5   10   15   20   25   30   35   40   45   50   55   60   65   70   75   80
*   V    V    V    V    V    V    V    V    V    V    V    V    V    V    V    V
00001  1 1     VEH: S1 - SPECIAL TRUCK 11 AXLE - SINGLE TRUCK
* code 1001
Cline Avenue - Striped Lanes - Single Box 28'-4" Wide
* code 1002
    2         1
* code 1003
*   5   10   15   20   25   30   35   40   45   50   55   60   65   70   75   80
*   V    V    V    V    V    V    V    V    V    V    V    V    V    V    V    V
250.0      122.0      28.33    1.0       1.0       1.3
* code 1004
    1    0    2
* code 1005
  258    1
* code 1005a
* location traffic lanes
10.167
* maximum and minimum truck
7.917     16.417    0.000
* code 1007, linear loads
0.7350    0.441
27.5983   0.441
* code 1201
    6    5    3    1    2
* code 1202 coordinates
 0.0000   8.2500
 6.3125   8.2500
 6.3125   0.3333
22.0208   8.2500
22.0208   0.3333
28.3333   8.2500
* code 1203 - profile 1
    5    2    3    4
0.000     0.750
1.667     0.971
3.236     1.178
5.667     1.500
6.313     1.500
* code 1203 - profile 2
    7    2    3    4
0.000     1.500
0.646     1.500
4.646     0.750
7.854     0.750
11.063    0.750
15.063    1.500
15.708    1.500
* code 1203 - profile 3
    5    2    3    4
0.000     1.500
0.646     1.500
3.076     1.178
4.646     0.971
6.313     0.750
* code 1203 - profile 4
    5    2    3    4
0.000     0.667
0.646     0.667
7.854     0.667
15.063    0.667
15.708    0.667
* code 1203 - profile 5
    5    2    3    4
0.000     1.292
0.750     1.292
4.042     1.292
7.583     1.292
7.917     1.292
* code 1204 - assembling boxgirder
    1    2    1
    2    4    2
    4    6    3
    3    5    4
    2    3    5
    4    5    5
* code 1205 control code
    1    2   13    1    1    0    4   11     1.0       1.0
* code 1206 wheels/axle
       0.0
```

```
       1.5
       6.0
       7.5 0.833
* code 1207 definition axles
0.00      12.00
11.50     24.60
16.67     24.60
21.67     24.60
34.83     24.60
39.33     24.60
89.92     24.60
94.42     24.60
98.92     24.60
112.50     24.60
117.00     24.60
* code 1208 - accuracy
0.00001   0.00001   0.00001   .00001    .00001
* code 1209 number sections
   29
* code definition sections
   1A   1B   1C   1R   2L   2A   2B   2C   2R   3L   3A   3B   3C   3R   4L   4A
   4B   4C   4R   5L   5A   5B   5C   5R   6L   6A   6B   6C   6R
* code 1210 - density conrete
0.156
* code 1211 - extra forces selfweight

* code 1212 - surcharge
0.7083
* code 1213 - Prestressing Layout - NONE
```

```
* start ; column 11-30 can be used to have your own text on the top of each page
*   5   10   15   20   25   30   35   40   45   50   55   60   65   70   75   80
*   V    V    V    V    V    V    V    V    V    V    V    V    V    V    V    V
00001  1 1     VEH: S2 - SPECIAL TRUCK - 13 AXLE - SINGLE TRUCK
* code 1001
Cline Avenue - Striped Lanes - Single Box 28'-4" Wide
* code 1002
    2         1
* code 1003
*   5   10   15   20   25   30   35   40   45   50   55   60   65   70   75   80
*   V    V    V    V    V    V    V    V    V    V    V    V    V    V    V    V
250.0      122.0      28.33    1.0       1.0       1.3
* code 1004
    1    0    2
* code 1005
  267    1
* code 1005a
* location traffic lanes
10.167
* maximum and minimum truck
7.917     16.417    0.000
* code 1007, linear loads
0.7350    0.441
27.5983   0.441
* code 1201
    6    5    3    1    2
* code 1202 coordinates
 0.0000   8.2500
 6.3125   8.2500
 6.3125   0.3333
22.0208   8.2500
22.0208   0.3333
28.3333   8.2500
* code 1203 - profile 1
    5    2    3    4
0.000     0.750
1.667     0.971
3.236     1.178
5.667     1.500
6.313     1.500
* code 1203 - profile 2
    7    2    3    4
0.000     1.500
0.646     1.500
4.646     0.750
7.854     0.750
11.063    0.750
15.063    1.500
15.708    1.500
* code 1203 - profile 3
    5    2    3    4
0.000     1.500
0.646     1.500
3.076     1.178
4.646     0.971
6.313     0.750
* code 1203 - profile 4
    5    2    3    4
0.000     0.667
0.646     0.667
7.854     0.667
15.063    0.667
15.708    0.667
* code 1203 - profile 5
    5    2    3    4
0.000     1.292
0.750     1.292
4.042     1.292
7.583     1.292
7.917     1.292
* code 1204 - assembling boxgirder
    1    2    1
    2    4    2
    4    6    3
    3    5    4
    2    3    5
    4    5    5
* code 1205 control code
    1    2   13    1    1    0    4   13     1.0       1.0
* code 1206 wheels/axle
       0.0
```

```
       1.5
       6.0
       7.5 0.833
* code 1207 definition axles
0.00      15.00
16.50     21.00
21.00     21.00
25.50     21.00
39.50     21.00
44.00     21.00
48.50     21.00
96.50     21.00
101.00    21.00
105.50    21.00
121.00    21.00
125.50    21.00
130.00    21.00
* code 1208 - accuracy
0.00001   0.00001   0.00001   .00001    .00001
* code 1209 number sections
   29
* code definition sections
   1A   1B   1C   1R   2L   2A   2B   2C   2R   3L   3A   3B   3C   3R   4L   4A
   4B   4C   4R   5L   5A   5B   5C   5R   6L   6A   6B   6C   6R
* code 1210 - density conrete
0.156
* code 1211 - extra forces selfweight

* code 1212 - surcharge
0.7083
* code 1213 - Prestressing Layout - NONE
```

```
* start ; column 11-30 can be used to have your own text on the top of each page
*   5   10   15   20   25   30   35   40   45   50   55   60   65   70   75   80
*   V    V    V    V    V    V    V    V    V    V    V    V    V    V    V    V
00001  1 1     VEH: S3 - SPECIAL TRUCK - 14 AXLE - SINGLE TRUCK
* code 1001
Cline Avenue - Striped Lanes - Single Box 28'-4" Wide
* code 1002
    2         1
* code 1003
*   5   10   15   20   25   30   35   40   45   50   55   60   65   70   75   80
*   V    V    V    V    V    V    V    V    V    V    V    V    V    V    V    V
250.0      122.0      28.33    1.0       1.0       1.3
* code 1004
    1    0    2
* code 1005
  350    1
* code 1005a
* location traffic lanes
10.167
* maximum and minimum truck
7.917     16.417    0.000
* code 1007, linear loads
0.7350    0.441
27.5983   0.441
* code 1201
    6    5    3    1    2
* code 1202 coordinates
 0.0000   8.2500
 6.3125   8.2500
 6.3125   0.3333
22.0208   8.2500
22.0208   0.3333
28.3333   8.2500
* code 1203 - profile 1
    5    2    3    4
0.000     0.750
1.667     0.971
3.236     1.178
5.667     1.500
6.313     1.500
* code 1203 - profile 2
    7    2    3    4
0.000     1.500
0.646     1.500
4.646     0.750
7.854     0.750
11.063    0.750
15.063    1.500
15.708    1.500
* code 1203 - profile 3
    5    2    3    4
0.000     1.500
0.646     1.500
3.076     1.178
4.646     0.971
6.313     0.750
* code 1203 - profile 4
    5    2    3    4
0.000     0.667
0.646     0.667
7.854     0.667
15.063    0.667
15.708    0.667
* code 1203 - profile 5
    5    2    3    4
0.000     1.292
0.750     1.292
4.042     1.292
7.583     1.292
7.917     1.292
* code 1204 - assembling boxgirder
    1    2    1
    2    4    2
    4    6    3
    3    5    4
    2    3    5
    4    5    5
* code 1205 control code
    1    2   13    1    1    0    4   14     1.0       1.0
* code 1206 wheels/axle
       0.0
```

```
       1.5
       6.0
       7.5 0.833
* code 1207 definition axles
0.00      13.00
14.50     25.00
19.00     25.00
23.50     25.00
50.50     23.50
54.67     23.50
58.83     23.50
102.83    23.50
107.33    28.00
111.83    28.00
116.33    28.00
132.17    28.00
136.67    28.00
141.17    28.00
* code 1208 - accuracy
0.00001   0.00001   0.00001   .00001    .00001
* code 1209 number sections
   29
* code definition sections
   1A   1B   1C   1R   2L   2A   2B   2C   2R   3L   3A   3B   3C   3R   4L   4A
   4B   4C   4R   5L   5A   5B   5C   5R   6L   6A   6B   6C   6R
* code 1210 - density conrete
0.156
* code 1211 - extra forces selfweight

* code 1212 - surcharge
0.7083
* code 1213 - Prestressing Layout - NONE
```

```
* start ; column 11-30 can be used to have your own text on the top of each page
*   5   10   15   20   25   30   35   40   45   50   55   60   65   70   75   80
*   V    V    V    V    V    V    V    V    V    V    V    V    V    V    V    V
00001  1 1     VEH: S4 - SUPER LOAD -19 AXLES - SINGLE TRUCK
* code 1001
Cline Avenue - Striped Lanes - Single Box 28'-4" Wide
* code 1002
    2         1
* code 1003
*   5   10   15   20   25   30   35   40   45   50   55   60   65   70   75   80
*   V    V    V    V    V    V    V    V    V    V    V    V    V    V    V    V
250.0      122.0      28.33    1.0       1.0       1.3
* code 1004
    1    0    2
* code 1005
  305    1
* code 1005a
* location traffic lanes
10.167
* maximum and minimum truck
7.917     16.417    0.000
* code 1007, linear loads
0.7350    0.441
27.5983   0.441
* code 1201
    6    5    3    1    2
* code 1202 coordinates
 0.0000   8.2500
 6.3125   8.2500
 6.3125   0.3333
22.0208   8.2500
22.0208   0.3333
28.3333   8.2500
* code 1203 - profile 1
    5    2    3    4
0.000     0.750
1.667     0.971
3.236     1.178
5.667     1.500
6.313     1.500
* code 1203 - profile 2
    7    2    3    4
0.000     1.500
0.646     1.500
4.646     0.750
7.854     0.750
11.063    0.750
15.063    1.500
15.708    1.500
* code 1203 - profile 3
    5    2    3    4
0.000     1.500
0.646     1.500
3.076     1.178
4.646     0.971
6.313     0.750
* code 1203 - profile 4
    5    2    3    4
0.000     0.667
0.646     0.667
7.854     0.667
15.063    0.667
15.708    0.667
* code 1203 - profile 5
    5    2    3    4
0.000     1.292
0.750     1.292
4.042     1.292
7.583     1.292
7.917     1.292
* code 1204 - assembling boxgirder
    1    2    1
    2    4    2
    4    6    3
    3    5    4
    2    3    5
    4    5    5
* code 1205 control code
    1    2   13    1    1    0    4   19     1.0       1.0
* code 1206 wheels/axle
       0.0
```

1V_A_SL_S4_EL.txt 9/11/2009

```
       1.5
       6.0
       7.5 0.833
* code 1207 definition axles
0.00      13.00
13.50     16.48
17.83     16.48
31.33     16.48
35.42     15.99
39.50     15.99
45.50     15.99
49.58     16.37
53.67     16.37
103.58    16.37
107.67    16.64
114.17    16.64
118.25    15.15
122.33    15.15
126.42    15.15
135.92    15.15
140.00    17.20
144.08    17.20
148.17    17.20
* code 1208 - accuracy
0.00001   0.00001   0.00001   .00001    .00001
* code 1209 number sections
   29
* code definition sections
   1A   1B   1C   1R   2L   2A   2B   2C   2R   3L   3A   3B   3C   3R   4L   4A
   4B   4C   4R   5L   5A   5B   5C   5R   6L   6A   6B   6C   6R
* code 1210 - density conrete
0.156
* code 1211 - extra forces selfweight

* code 1212 - surcharge
0.7083
* code 1213 - Prestressing Layout - NONE
```

```
* start ; column 11-30 can be used to have your own text on the top of each page
*   5   10   15   20   25   30   35   40   45   50   55   60   65   70   75   80
*   V    V    V    V    V    V    V    V    V    V    V    V    V    V    V    V
00001  1 1     VEH: S5 - SUPERLOAD - 19 AXLE - SINGLE TRUCK
* code 1001
Cline Avenue - Striped Lanes - Single Box 28'-4" Wide
* code 1002
    2         1
* code 1003
*   5   10   15   20   25   30   35   40   45   50   55   60   65   70   75   80
*   V    V    V    V    V    V    V    V    V    V    V    V    V    V    V    V
250.0      122.0      28.33    1.0       1.0       1.3
* code 1004
    1    0    2
* code 1005
  480    1
* code 1005a
* location traffic lanes
10.167
* maximum and minimum truck
7.917     16.417    0.000
* code 1007, linear loads
0.7350    0.441
27.5983   0.441
* code 1201
    6    5    3    1    2
* code 1202 coordinates
 0.0000   8.2500
 6.3125   8.2500
 6.3125   0.3333
22.0208   8.2500
22.0208   0.3333
28.3333   8.2500
* code 1203 - profile 1
    5    2    3    4
0.000     0.750
1.667     0.971
3.236     1.178
5.667     1.500
6.313     1.500
* code 1203 - profile 2
    7    2    3    4
0.000     1.500
0.646     1.500
4.646     0.750
7.854     0.750
11.063    0.750
15.063    1.500
15.708    1.500
* code 1203 - profile 3
    5    2    3    4
0.000     1.500
0.646     1.500
3.076     1.178
4.646     0.971
6.313     0.750
* code 1203 - profile 4
    5    2    3    4
0.000     0.667
0.646     0.667
7.854     0.667
15.063    0.667
15.708    0.667
* code 1203 - profile 5
    5    2    3    4
0.000     1.292
0.750     1.292
4.042     1.292
7.583     1.292
7.917     1.292
* code 1204 - assembling boxgirder
    1    2    1
    2    4    2
    4    6    3
    3    5    4
    2    3    5
    4    5    5
* code 1205 control code
    1    2   13    1    1    0    4   19     1.0       1.0
* code 1206 wheels/axle
       0.0
```

1V_A_SL_S5_EL.txt 9/11/2009

```
       1.5
       6.0
       7.5 0.833
* code 1207 definition axles
0.00      12.88
12.50     25.95
17.50     25.95
31.58     25.95
36.58     25.95
41.58     25.95
55.67     25.95
60.67     25.95
65.67     25.95
115.67    25.95
120.67    25.95
125.67    25.95
139.75    25.95
144.75    25.95
149.75    25.95
163.83    25.95
168.83    25.95
173.83    25.95
178.83    25.95
* code 1208 - accuracy
0.00001   0.00001   0.00001   .00001    .00001
* code 1209 number sections
   29
* code definition sections
   1A   1B   1C   1R   2L   2A   2B   2C   2R   3L   3A   3B   3C   3R   4L   4A
   4B   4C   4R   5L   5A   5B   5C   5R   6L   6A   6B   6C   6R
* code 1210 - density conrete
0.156
* code 1211 - extra forces selfweight

* code 1212 - surcharge
0.7083
* code 1213 - Prestressing Layout - NONE
```

4.9.3 Brug Output AASHTO Lanes (Summary)

VEH: HL93- TRUCK - S BRUG(5.75.44) page 39
date 11/09/2009; time 13:27:48
Cline Avenue - Load Rating - Single Box 28'-4" Wide

Summary of the results (Maximum)

Section	Deadload Moment	Deadload Ax.Frc	P.T. Moment	P.T. Ax.Frc	Live load Moment	Live load Ax.Frc
1 a	-0.60	0.05	0.00	0.00	0.32	0.01
1 b	-1.94	0.22	0.00	0.00	1.41	0.07
1 c	-5.06	0.75	0.00	0.00	-0.10	0.12
1 right	-6.13	0.95	0.00	0.00	-0.14	0.15
2 left	-4.30	0.98	0.00	0.00	-2.92	-0.31
2 a	-3.43	0.76	0.00	0.00	-1.87	0.92
2 b	-0.03	-0.09	0.00	0.00	3.57	0.04
2 c	0.70	-0.27	0.00	0.00	4.27	-0.60
2 right	-4.30	0.98	0.00	0.00	-2.92	-0.31
3 left	-6.13	0.95	0.00	0.00	-0.14	0.15
3 a	-5.06	0.75	0.00	0.00	-0.10	0.12
3 b	-1.94	0.22	0.00	0.00	1.41	0.07
3 c	-0.60	0.05	0.00	0.00	0.32	0.01
3 right	0.00	0.00	0.00	0.00	0.00	0.00
4 left	-1.60	-0.03	0.00	0.00	0.79	-0.44
4 a	-1.09	0.26	0.00	0.00	0.71	-0.27
4 b	1.60	1.82	0.00	0.00	0.00	0.49
4 c	-1.09	0.26	0.00	0.00	0.71	-0.27
4 right	-1.60	-0.03	0.00	0.00	0.79	-0.44
5 top	-1.83	-3.14	0.00	0.00	5.22	-1.96
5 a	-1.81	-2.75	0.00	0.00	4.45	-1.73
5 b	-1.71	-0.89	0.00	0.00	1.98	-0.72
5 c	-1.61	0.72	0.00	0.00	0.65	-0.23
5 bottom	-1.60	0.81	0.00	0.00	0.79	-0.12
6 top	1.83	-3.14	0.00	0.00	2.56	-7.76
6 a	1.81	-2.75	0.00	0.00	2.18	-6.56
6 b	1.71	-0.89	0.00	0.00	0.76	-2.44
6 c	1.61	0.72	0.00	0.00	0.63	0.09
6 bottom	1.60	0.81	0.00	0.00	0.77	0.10

Summary of the results (Minimum)

Section	Deadload Moment	Deadload Ax.Frc	P.T. Moment	P.T. Ax.Frc	Live load Moment	Live load Ax.Frc
1 a	-0.60	0.05	0.00	0.00	-0.06	0.02
1 b	-1.94	0.22	0.00	0.00	-0.20	0.10
1 c	-5.06	0.75	0.00	0.00	-4.26	0.50
1 right	-6.13	0.95	0.00	0.00	-6.69	0.85
2 left	-4.30	0.98	0.00	0.00	-7.06	-0.17
2 a	-3.43	0.76	0.00	0.00	-5.95	-0.43
2 b	-0.03	-0.09	0.00	0.00	-1.68	-0.56
2 c	0.70	-0.27	0.00	0.00	0.26	-0.10
2 right	-4.30	0.98	0.00	0.00	-7.06	-0.17
3 left	-6.13	0.95	0.00	0.00	-6.69	0.85
3 a	-5.06	0.75	0.00	0.00	-4.26	0.50
3 b	-1.94	0.22	0.00	0.00	-0.20	0.10
3 c	-0.60	0.05	0.00	0.00	-0.06	0.02
3 right	0.00	0.00	0.00	0.00	0.00	0.00
4 left	-1.60	-0.03	0.00	0.00	-0.77	0.46

VEH: HL93- TRUCK - S BRUG(5.75.44) page 40
date 11/09/2009; time 13:27:48
Cline Avenue - Load Rating - Single Box 28'-4" Wide

Summary of the results (Minimum)

Section	Deadload Moment	Deadload Ax.Frc	P.T. Moment	P.T. Ax.Frc	Live load Moment	Live load Ax.Frc
4 a	-1.09	0.26	0.00	0.00	-0.71	0.48
4 b	1.60	1.82	0.00	0.00	-0.08	1.00
4 c	-1.09	0.26	0.00	0.00	-0.71	0.48
4 right	-1.60	-0.03	0.00	0.00	-0.77	0.46
5 top	-1.83	-3.14	0.00	0.00	-2.56	-7.76
5 a	-1.81	-2.75	0.00	0.00	-2.18	-6.56
5 b	-1.71	-0.89	0.00	0.00	-0.76	-2.44
5 c	-1.61	0.72	0.00	0.00	-0.63	0.09
5 bottom	-1.60	0.81	0.00	0.00	-0.77	0.10
6 top	1.83	-3.14	0.00	0.00	-5.22	-1.96
6 a	1.81	-2.75	0.00	0.00	-4.45	-1.73
6 b	1.71	-0.89	0.00	0.00	-1.98	-0.72
6 c	1.61	0.72	0.00	0.00	-0.65	-0.23
6 bottom	1.60	0.81	0.00	0.00	-0.79	-0.12

VEH: HL93- TANDEM - BRUG(5.75.44) page 39
date 11/09/2009; time 13:27:47
Cline Avenue - Load Rating - Single Box 28'-4" Wide

Summary of the results (Maximum)

Section	Deadload Moment	Deadload Ax.Frc	P.T. Moment	P.T. Ax.Frc	Live load Moment	Live load Ax.Frc
1 a	-0.60	0.05	0.00	0.00	0.25	0.03
1 b	-1.94	0.22	0.00	0.00	0.80	0.13
1 c	-5.06	0.75	0.00	0.00	-0.18	0.09
1 right	-6.13	0.95	0.00	0.00	-0.25	0.12
2 left	-4.30	0.98	0.00	0.00	-2.61	-0.27
2 a	-3.43	0.76	0.00	0.00	-2.38	-0.28
2 b	-0.03	-0.09	0.00	0.00	2.98	0.05
2 c	0.70	-0.27	0.00	0.00	3.94	-0.61
2 right	-4.30	0.98	0.00	0.00	-2.62	-0.27
3 left	-6.13	0.95	0.00	0.00	-0.25	0.12
3 a	-5.06	0.75	0.00	0.00	-0.18	0.09
3 b	-1.94	0.22	0.00	0.00	0.80	0.13
3 c	-0.60	0.05	0.00	0.00	0.25	0.03
3 right	0.00	0.00	0.00	0.00	0.00	0.00
4 left	-1.60	-0.03	0.00	0.00	0.62	-0.36
4 a	-1.09	0.26	0.00	0.00	0.56	-0.16
4 b	1.60	1.82	0.00	0.00	-0.01	0.58
4 c	-1.09	0.26	0.00	0.00	0.56	-0.16
4 right	-1.60	-0.03	0.00	0.00	0.62	-0.36
5 top	-1.83	-3.14	0.00	0.00	5.92	-2.92
5 a	-1.81	-2.75	0.00	0.00	4.54	-1.89
5 b	-1.71	-0.89	0.00	0.00	1.94	-0.86
5 c	-1.61	0.72	0.00	0.00	0.51	-0.22
5 bottom	-1.60	0.81	0.00	0.00	0.62	-0.09
6 top	1.83	-3.14	0.00	0.00	2.05	-6.62
6 a	1.81	-2.75	0.00	0.00	1.75	-5.80
6 b	1.71	-0.89	0.00	0.00	0.61	-2.54
6 c	1.61	0.72	0.00	0.00	0.48	0.06
6 bottom	1.60	0.81	0.00	0.00	0.60	0.08

Summary of the results (Minimum)

Section	Deadload Moment	Deadload Ax.Frc	P.T. Moment	P.T. Ax.Frc	Live load Moment	Live load Ax.Frc
1 a	-0.60	0.05	0.00	0.00	-0.11	0.03
1 b	-1.94	0.22	0.00	0.00	-0.37	0.13
1 c	-5.06	0.75	0.00	0.00	-4.71	0.60
1 right	-6.13	0.95	0.00	0.00	-6.87	0.86
2 left	-4.30	0.98	0.00	0.00	-7.89	-0.14
2 a	-3.43	0.76	0.00	0.00	-5.94	-0.44
2 b	-0.03	-0.09	0.00	0.00	-1.29	-0.43
2 c	0.70	-0.27	0.00	0.00	0.38	-0.10
2 right	-4.30	0.98	0.00	0.00	-7.89	-0.14
3 left	-6.13	0.95	0.00	0.00	-6.87	0.86
3 a	-5.06	0.75	0.00	0.00	-4.71	0.60
3 b	-1.94	0.22	0.00	0.00	-0.37	0.13
3 c	-0.60	0.05	0.00	0.00	-0.11	0.03
3 right	0.00	0.00	0.00	0.00	0.00	0.00
4 left	-1.60	-0.03	0.00	0.00	-0.60	0.38

VEH: HL93- TANDEM - BRUG(5.75.44) page 40
date 11/09/2009; time 13:27:47
Cline Avenue - Load Rating - Single Box 28'-4" Wide

Summary of the results (Minimum)

Section	Deadload Moment	Deadload Ax.Frc	P.T. Moment	P.T. Ax.Frc	Live load Moment	Live load Ax.Frc
4 a	-1.09	0.26	0.00	0.00	-0.54	0.42
4 b	1.60	1.82	0.00	0.00	-0.07	1.12
4 c	-1.09	0.26	0.00	0.00	-0.54	0.42
4 right	-1.60	-0.03	0.00	0.00	-0.60	0.38
5 top	-1.83	-3.14	0.00	0.00	-2.05	-6.62
5 a	-1.81	-2.75	0.00	0.00	-1.75	-5.80
5 b	-1.71	-0.89	0.00	0.00	-0.61	-2.54
5 c	-1.61	0.72	0.00	0.00	-0.48	0.06
5 bottom	-1.60	0.81	0.00	0.00	-0.60	0.08
6 top	1.83	-3.14	0.00	0.00	-5.92	-2.92
6 a	1.81	-2.75	0.00	0.00	-4.54	-1.89
6 b	1.71	-0.89	0.00	0.00	-1.94	-0.86
6 c	1.61	0.72	0.00	0.00	-0.51	-0.22
6 bottom	1.60	0.81	0.00	0.00	-0.62	-0.09

VEH: R1 - TOLL ROAD BRUG(5.75.44) page 39
date 11/09/2009; time 13:27:48
Cline Avenue - Load Rating - Single Box 28'-4" Wide

Summary of the results (Maximum)

Section	--- Deadload ----		----- P.T. ------		--- Live load ---	
	Moment	Ax.Frc	Moment	Ax.Frc	Moment	Ax.Frc
1 a	-0.60	0.05	0.00	0.00	0.12	0.02
1 b	-1.94	0.22	0.00	0.00	0.49	0.09
1 c	-5.06	0.75	0.00	0.00	-0.07	0.13
1 right	-6.13	0.95	0.00	0.00	-0.09	0.17
2 left	-4.30	0.98	0.00	0.00	-2.36	1.09
2 a	-3.43	0.76	0.00	0.00	-1.05	0.87
2 b	-0.03	-0.09	0.00	0.00	2.84	0.08
2 c	0.70	-0.27	0.00	0.00	3.29	-0.71
2 right	-4.30	0.98	0.00	0.00	-2.36	1.09
3 left	-6.13	0.95	0.00	0.00	-0.09	0.17
3 a	-5.06	0.75	0.00	0.00	-0.07	0.13
3 b	-1.94	0.22	0.00	0.00	0.49	0.09
3 c	-0.60	0.05	0.00	0.00	0.12	0.02
3 right	0.00	0.00	0.00	0.00	0.00	0.00
4 left	-1.60	-0.03	0.00	0.00	0.95	-0.51
4 a	-1.09	0.26	0.00	0.00	0.87	-0.35
4 b	1.60	1.82	0.00	0.00	0.00	0.57
4 c	-1.09	0.26	0.00	0.00	0.87	-0.35
4 right	-1.60	-0.03	0.00	0.00	0.95	-0.51
5 top	-1.83	-3.14	0.00	0.00	5.75	-1.58
5 a	-1.81	-2.75	0.00	0.00	5.05	-1.41
5 b	-1.71	-0.89	0.00	0.00	2.39	-0.64
5 c	-1.61	0.72	0.00	0.00	0.79	-0.23
5 bottom	-1.60	0.81	0.00	0.00	0.95	-0.13
6 top	1.83	-3.14	0.00	0.00	2.98	-4.63
6 a	1.81	-2.75	0.00	0.00	2.58	-4.04
6 b	1.71	-0.89	0.00	0.00	0.92	-1.79
6 c	1.61	0.72	0.00	0.00	0.77	0.11
6 bottom	1.60	0.81	0.00	0.00	0.95	0.13

Summary of the results (Minimum)

Section	--- Deadload ----		----- P.T. ------		--- Live load ---	
	Moment	Ax.Frc	Moment	Ax.Frc	Moment	Ax.Frc
1 a	-0.60	0.05	0.00	0.00	-0.04	0.02
1 b	-1.94	0.22	0.00	0.00	-0.14	0.08
1 c	-5.06	0.75	0.00	0.00	-3.75	0.40
1 right	-6.13	0.95	0.00	0.00	-5.34	0.57
2 left	-4.30	0.98	0.00	0.00	-6.28	-0.52
2 a	-3.43	0.76	0.00	0.00	-5.47	-0.57
2 b	-0.03	-0.09	0.00	0.00	-1.37	-0.52
2 c	0.70	-0.27	0.00	0.00	0.35	-0.11
2 right	-4.30	0.98	0.00	0.00	-6.28	-0.52
3 left	-6.13	0.95	0.00	0.00	-5.34	0.57
3 a	-5.06	0.75	0.00	0.00	-3.75	0.40
3 b	-1.94	0.22	0.00	0.00	-0.14	0.08
3 c	-0.60	0.05	0.00	0.00	-0.04	0.02
3 right	0.00	0.00	0.00	0.00	0.00	0.00
4 left	-1.60	-0.03	0.00	0.00	-0.95	0.55

VEH: R1 - TOLL ROAD BRUG(5.75.44) page 40
date 11/09/2009; time 13:27:48
Cline Avenue - Load Rating - Single Box 28'-4" Wide

Summary of the results (Minimum)

Section	--- Deadload ----		----- P.T. ------		--- Live load ---	
	Moment	Ax.Frc	Moment	Ax.Frc	Moment	Ax.Frc
4 a	-1.09	0.26	0.00	0.00	-0.87	0.58
4 b	1.60	1.82	0.00	0.00	-0.09	1.17
4 c	-1.09	0.26	0.00	0.00	-0.87	0.58
4 right	-1.60	-0.03	0.00	0.00	-0.95	0.55
5 top	-1.83	-3.14	0.00	0.00	-2.98	-4.63
5 a	-1.81	-2.75	0.00	0.00	-2.58	-4.04
5 b	-1.71	-0.89	0.00	0.00	-0.92	-1.79
5 c	-1.61	0.72	0.00	0.00	-0.77	0.11
5 bottom	-1.60	0.81	0.00	0.00	-0.95	0.13
6 top	1.83	-3.14	0.00	0.00	-5.75	-1.58
6 a	1.81	-2.75	0.00	0.00	-5.05	-1.41
6 b	1.71	-0.89	0.00	0.00	-2.39	-0.64
6 c	1.61	0.72	0.00	0.00	-0.79	-0.23
6 bottom	1.60	0.81	0.00	0.00	-0.95	-0.13

VEH: R2 - TOLL ROAD BRUG(5.75.44) page 39
date 11/09/2009; time 13:27:49
Cline Avenue - Load Rating - Single Box 28'-4" Wide

Summary of the results (Maximum)

Section	Deadload Moment	Deadload Ax.Frc	P.T. Moment	P.T. Ax.Frc	Live load Moment	Live load Ax.Frc
1 a	-0.60	0.05	0.00	0.00	0.17	0.01
1 b	-1.94	0.22	0.00	0.00	0.82	0.05
1 c	-5.06	0.75	0.00	0.00	0.06	0.37
1 right	-6.13	0.95	0.00	0.00	-0.07	0.16
2 left	-4.30	0.98	0.00	0.00	-1.91	0.65
2 a	-3.43	0.76	0.00	0.00	-0.72	0.77
2 b	-0.03	-0.09	0.00	0.00	2.84	0.06
2 c	0.70	-0.27	0.00	0.00	3.19	-0.58
2 right	-4.30	0.98	0.00	0.00	-1.91	0.65
3 left	-6.13	0.95	0.00	0.00	-0.07	0.16
3 a	-5.06	0.75	0.00	0.00	0.06	0.37
3 b	-1.94	0.22	0.00	0.00	0.82	0.05
3 c	-0.60	0.05	0.00	0.00	0.17	0.01
3 right	0.00	0.00	0.00	0.00	0.00	0.00
4 left	-1.60	-0.03	0.00	0.00	0.86	-0.46
4 a	-1.09	0.26	0.00	0.00	0.79	-0.33
4 b	1.60	1.82	0.00	0.00	0.00	0.45
4 c	-1.09	0.26	0.00	0.00	0.79	-0.33
4 right	-1.60	-0.03	0.00	0.00	0.86	-0.46
5 top	-1.83	-3.14	0.00	0.00	4.84	-1.41
5 a	-1.81	-2.75	0.00	0.00	4.23	-1.24
5 b	-1.71	-0.89	0.00	0.00	1.98	-0.53
5 c	-1.61	0.72	0.00	0.00	0.72	-0.20
5 bottom	-1.60	0.81	0.00	0.00	0.86	-0.12
6 top	1.83	-3.14	0.00	0.00	2.72	-5.10
6 a	1.81	-2.75	0.00	0.00	2.33	-4.32
6 b	1.71	-0.89	0.00	0.00	0.83	-1.64
6 c	1.61	0.72	0.00	0.00	0.70	0.10
6 bottom	1.60	0.81	0.00	0.00	0.86	0.11

Summary of the results (Minimum)

Section	Deadload Moment	Deadload Ax.Frc	P.T. Moment	P.T. Ax.Frc	Live load Moment	Live load Ax.Frc
1 a	-0.60	0.05	0.00	0.00	-0.03	0.02
1 b	-1.94	0.22	0.00	0.00	-0.10	0.07
1 c	-5.06	0.75	0.00	0.00	-3.23	0.33
1 right	-6.13	0.95	0.00	0.00	-4.89	0.56
2 left	-4.30	0.98	0.00	0.00	-5.29	-0.43
2 a	-3.43	0.76	0.00	0.00	-4.61	-0.48
2 b	-0.03	-0.09	0.00	0.00	-1.29	-0.43
2 c	0.70	-0.27	0.00	0.00	0.24	-0.09
2 right	-4.30	0.98	0.00	0.00	-5.29	-0.43
3 left	-6.13	0.95	0.00	0.00	-4.89	0.56
3 a	-5.06	0.75	0.00	0.00	-3.23	0.33
3 b	-1.94	0.22	0.00	0.00	-0.10	0.07
3 c	-0.60	0.05	0.00	0.00	-0.03	0.02
3 right	0.00	0.00	0.00	0.00	0.00	0.00
4 left	-1.60	-0.03	0.00	0.00	-0.86	0.49

VEH: R2 - TOLL ROAD BRUG(5.75.44) page 40
date 11/09/2009; time 13:27:49
Cline Avenue - Load Rating - Single Box 28'-4" Wide

Summary of the results (Minimum)

Section	Deadload Moment	Deadload Ax.Frc	P.T. Moment	P.T. Ax.Frc	Live load Moment	Live load Ax.Frc
4 a	-1.09	0.26	0.00	0.00	-0.79	0.51
4 b	1.60	1.82	0.00	0.00	-0.08	0.94
4 c	-1.09	0.26	0.00	0.00	-0.79	0.51
4 right	-1.60	-0.03	0.00	0.00	-0.86	0.49
5 top	-1.83	-3.14	0.00	0.00	-2.72	-5.10
5 a	-1.81	-2.75	0.00	0.00	-2.33	-4.32
5 b	-1.71	-0.89	0.00	0.00	-0.83	-1.64
5 c	-1.61	0.72	0.00	0.00	-0.70	0.10
5 bottom	-1.60	0.81	0.00	0.00	-0.86	0.11
6 top	1.83	-3.14	0.00	0.00	-4.84	-1.41
6 a	1.81	-2.75	0.00	0.00	-4.23	-1.24
6 b	1.71	-0.89	0.00	0.00	-1.98	-0.53
6 c	1.61	0.72	0.00	0.00	-0.72	-0.20
6 bottom	1.60	0.81	0.00	0.00	-0.86	-0.12

VEH: R3 - TOLL ROAD BRUG(5.75.44) page 39
date 11/09/2009; time 13:27:49
Cline Avenue - Load Rating - Single Box 28'-4" Wide

Summary of the results (Maximum)

Section	Deadload Moment	Deadload Ax.Frc	P.T. Moment	P.T. Ax.Frc	Live load Moment	Live load Ax.Frc
1 a	-0.60	0.05	0.00	0.00	0.17	0.01
1 b	-1.94	0.22	0.00	0.00	0.59	0.07
1 c	-5.06	0.75	0.00	0.00	-0.12	0.14
1 right	-6.13	0.95	0.00	0.00	-0.16	0.18
2 left	-4.30	0.98	0.00	0.00	-2.31	0.63
2 a	-3.43	0.76	0.00	0.00	-1.03	0.79
2 b	-0.03	-0.09	0.00	0.00	2.71	0.07
2 c	0.70	-0.27	0.00	0.00	3.00	-0.52
2 right	-4.30	0.98	0.00	0.00	-2.31	0.63
3 left	-6.13	0.95	0.00	0.00	-0.16	0.18
3 a	-5.06	0.75	0.00	0.00	-0.12	0.14
3 b	-1.94	0.22	0.00	0.00	0.59	0.07
3 c	-0.60	0.05	0.00	0.00	0.18	0.01
3 right	0.00	0.00	0.00	0.00	0.00	0.00
4 left	-1.60	-0.03	0.00	0.00	0.88	-0.46
4 a	-1.09	0.26	0.00	0.00	0.80	-0.31
4 b	1.60	1.82	0.00	0.00	0.00	0.45
4 c	-1.09	0.26	0.00	0.00	0.80	-0.31
4 right	-1.60	-0.03	0.00	0.00	0.88	-0.46
5 top	-1.83	-3.14	0.00	0.00	4.81	-1.61
5 a	-1.81	-2.75	0.00	0.00	4.15	-1.44
5 b	-1.71	-0.89	0.00	0.00	1.84	-0.63
5 c	-1.61	0.72	0.00	0.00	0.73	-0.21
5 bottom	-1.60	0.81	0.00	0.00	0.88	-0.12
6 top	1.83	-3.14	0.00	0.00	2.72	-4.74
6 a	1.81	-2.75	0.00	0.00	2.35	-4.16
6 b	1.71	-0.89	0.00	0.00	0.84	-1.86
6 c	1.61	0.72	0.00	0.00	0.71	0.10
6 bottom	1.60	0.81	0.00	0.00	0.87	0.11

Summary of the results (Minimum)

Section	Deadload Moment	Deadload Ax.Frc	P.T. Moment	P.T. Ax.Frc	Live load Moment	Live load Ax.Frc
1 a	-0.60	0.05	0.00	0.00	-0.05	0.02
1 b	-1.94	0.22	0.00	0.00	-0.19	0.09
1 c	-5.06	0.75	0.00	0.00	-3.51	0.36
1 right	-6.13	0.95	0.00	0.00	-5.10	0.54
2 left	-4.30	0.98	0.00	0.00	-5.64	-0.37
2 a	-3.43	0.76	0.00	0.00	-4.93	-0.42
2 b	-0.03	-0.09	0.00	0.00	-1.36	-0.40
2 c	0.70	-0.27	0.00	0.00	0.29	-0.09
2 right	-4.30	0.98	0.00	0.00	-5.64	-0.37
3 left	-6.13	0.95	0.00	0.00	-5.10	0.54
3 a	-5.06	0.75	0.00	0.00	-3.51	0.36
3 b	-1.94	0.22	0.00	0.00	-0.19	0.09
3 c	-0.60	0.05	0.00	0.00	-0.05	0.02
3 right	0.00	0.00	0.00	0.00	0.00	0.00
4 left	-1.60	-0.03	0.00	0.00	-0.87	0.48

VEH: R3 - TOLL ROAD BRUG(5.75.44) page 40
date 11/09/2009; time 13:27:49
Cline Avenue - Load Rating - Single Box 28'-4" Wide

Summary of the results (Minimum)

Section	Deadload Moment	Deadload Ax.Frc	P.T. Moment	P.T. Ax.Frc	Live load Moment	Live load Ax.Frc
4 a	-1.09	0.26	0.00	0.00	-0.79	0.50
4 b	1.60	1.82	0.00	0.00	-0.07	0.90
4 c	-1.09	0.26	0.00	0.00	-0.79	0.50
4 right	-1.60	-0.03	0.00	0.00	-0.87	0.48
5 top	-1.83	-3.14	0.00	0.00	-2.72	-4.74
5 a	-1.81	-2.75	0.00	0.00	-2.35	-4.16
5 b	-1.71	-0.89	0.00	0.00	-0.84	-1.86
5 c	-1.61	0.72	0.00	0.00	-0.71	0.10
5 bottom	-1.60	0.81	0.00	0.00	-0.87	0.11
6 top	1.83	-3.14	0.00	0.00	-4.81	-1.61
6 a	1.81	-2.75	0.00	0.00	-4.15	-1.44
6 b	1.71	-0.89	0.00	0.00	-1.83	-0.63
6 c	1.61	0.72	0.00	0.00	-0.73	-0.21
6 bottom	1.60	0.81	0.00	0.00	-0.88	-0.12

VEH: R4 - MICHIGAN T BRUG(5.75.44) page 39
date 11/09/2009; time 13:27:50
Cline Avenue - Load Rating - Single Box 28'-4" Wide

Summary of the results (Maximum)

Section	--- Deadload ----		----- P.T. ------		--- Live load ---	
	Moment	Ax.Frc	Moment	Ax.Frc	Moment	Ax.Frc
1 a	-0.60	0.05	0.00	0.00	0.10	0.01
1 b	-1.94	0.22	0.00	0.00	0.52	0.03
1 c	-5.06	0.75	0.00	0.00	0.18	0.16
1 right	-6.13	0.95	0.00	0.00	-0.03	0.21
2 left	-4.30	0.98	0.00	0.00	-0.71	0.97
2 a	-3.43	0.76	0.00	0.00	0.30	0.76
2 b	-0.03	-0.09	0.00	0.00	2.77	0.09
2 c	0.70	-0.27	0.00	0.00	2.75	-0.61
2 right	-4.30	0.98	0.00	0.00	-0.71	0.97
3 left	-6.13	0.95	0.00	0.00	-0.03	0.21
3 a	-5.06	0.75	0.00	0.00	0.18	0.16
3 b	-1.94	0.22	0.00	0.00	0.52	0.03
3 c	-0.60	0.05	0.00	0.00	0.10	0.01
3 right	0.00	0.00	0.00	0.00	0.00	0.00
4 left	-1.60	-0.03	0.00	0.00	1.12	-0.58
4 a	-1.09	0.26	0.00	0.00	1.03	-0.45
4 b	1.60	1.82	0.00	0.00	0.00	0.45
4 c	-1.09	0.26	0.00	0.00	1.03	-0.45
4 right	-1.60	-0.03	0.00	0.00	1.12	-0.58
5 top	-1.83	-3.14	0.00	0.00	5.20	-1.20
5 a	-1.81	-2.75	0.00	0.00	4.61	-1.06
5 b	-1.71	-0.89	0.00	0.00	2.23	-0.45
5 c	-1.61	0.72	0.00	0.00	0.93	-0.22
5 bottom	-1.60	0.81	0.00	0.00	1.12	-0.15
6 top	1.83	-3.14	0.00	0.00	3.43	-3.81
6 a	1.81	-2.75	0.00	0.00	2.97	-3.25
6 b	1.71	-0.89	0.00	0.00	1.07	-1.30
6 c	1.61	0.72	0.00	0.00	0.92	0.13
6 bottom	1.60	0.81	0.00	0.00	1.12	0.15

Summary of the results (Minimum)

Section	--- Deadload ----		----- P.T. ------		--- Live load ---	
	Moment	Ax.Frc	Moment	Ax.Frc	Moment	Ax.Frc
1 a	-0.60	0.05	0.00	0.00	-0.01	0.01
1 b	-1.94	0.22	0.00	0.00	-0.01	0.05
1 c	-5.06	0.75	0.00	0.00	-2.85	0.17
1 right	-6.13	0.95	0.00	0.00	-4.15	0.38
2 left	-4.30	0.98	0.00	0.00	-5.29	-0.50
2 a	-3.43	0.76	0.00	0.00	-4.61	-0.54
2 b	-0.03	-0.09	0.00	0.00	-1.44	-0.35
2 c	0.70	-0.27	0.00	0.00	0.25	-0.09
2 right	-4.30	0.98	0.00	0.00	-5.29	-0.50
3 left	-6.13	0.95	0.00	0.00	-4.15	0.38
3 a	-5.06	0.75	0.00	0.00	-2.85	0.17
3 b	-1.94	0.22	0.00	0.00	-0.01	0.05
3 c	-0.60	0.05	0.00	0.00	-0.01	0.01
3 right	0.00	0.00	0.00	0.00	0.00	0.00
4 left	-1.60	-0.03	0.00	0.00	-1.12	0.61

VEH: R4 - MICHIGAN T BRUG(5.75.44) page 40
date 11/09/2009; time 13:27:50
Cline Avenue - Load Rating - Single Box 28'-4" Wide

Summary of the results (Minimum)

Section	--- Deadload ----		----- P.T. ------		--- Live load ---	
	Moment	Ax.Frc	Moment	Ax.Frc	Moment	Ax.Frc
4 a	-1.09	0.26	0.00	0.00	-1.03	0.63
4 b	1.60	1.82	0.00	0.00	-0.09	0.96
4 c	-1.09	0.26	0.00	0.00	-1.03	0.63
4 right	-1.60	-0.03	0.00	0.00	-1.12	0.61
5 top	-1.83	-3.14	0.00	0.00	-3.43	-3.81
5 a	-1.81	-2.75	0.00	0.00	-2.97	-3.25
5 b	-1.71	-0.89	0.00	0.00	-1.07	-1.30
5 c	-1.61	0.72	0.00	0.00	-0.92	0.13
5 bottom	-1.60	0.81	0.00	0.00	-1.12	0.15
6 top	1.83	-3.14	0.00	0.00	-5.20	-1.20
6 a	1.81	-2.75	0.00	0.00	-4.61	-1.06
6 b	1.71	-0.89	0.00	0.00	-2.23	-0.45
6 c	1.61	0.72	0.00	0.00	-0.93	-0.22
6 bottom	1.60	0.81	0.00	0.00	-1.12	-0.15

VEH: R5 - MICHIGAN T BRUG(5.75.44) page 39
date 11/09/2009; time 13:27:50
Cline Avenue - Load Rating - Single Box 28'-4" Wide

Summary of the results (Maximum)

Section	Deadload Moment	Deadload Ax.Frc	P.T. Moment	P.T. Ax.Frc	Live load Moment	Live load Ax.Frc
1 a	-0.60	0.05	0.00	0.00	0.04	0.02
1 b	-1.94	0.22	0.00	0.00	0.11	0.10
1 c	-5.06	0.75	0.00	0.00	-0.08	0.18
1 right	-6.13	0.95	0.00	0.00	-0.10	0.23
2 left	-4.30	0.98	0.00	0.00	-1.36	1.08
2 a	-3.43	0.76	0.00	0.00	-0.44	0.92
2 b	-0.03	-0.09	0.00	0.00	2.85	-0.18
2 c	0.70	-0.27	0.00	0.00	3.02	-0.77
2 right	-4.30	0.98	0.00	0.00	-1.36	1.08
3 left	-6.13	0.95	0.00	0.00	-0.10	0.23
3 a	-5.06	0.75	0.00	0.00	-0.08	0.18
3 b	-1.94	0.22	0.00	0.00	0.11	0.10
3 c	-0.60	0.05	0.00	0.00	0.04	0.02
3 right	0.00	0.00	0.00	0.00	0.00	0.00
4 left	-1.60	-0.03	0.00	0.00	1.21	-0.63
4 a	-1.09	0.26	0.00	0.00	1.10	-0.46
4 b	1.60	1.82	0.00	0.00	0.00	0.62
4 c	-1.09	0.26	0.00	0.00	1.10	-0.46
4 right	-1.60	-0.03	0.00	0.00	1.21	-0.63
5 top	-1.83	-3.14	0.00	0.00	6.42	-1.55
5 a	-1.81	-2.75	0.00	0.00	5.69	-1.40
5 b	-1.71	-0.89	0.00	0.00	2.71	-0.66
5 c	-1.61	0.72	0.00	0.00	1.00	-0.26
5 bottom	-1.60	0.81	0.00	0.00	1.21	-0.16
6 top	1.83	-3.14	0.00	0.00	3.69	-3.44
6 a	1.81	-2.75	0.00	0.00	3.21	-3.10
6 b	1.71	-0.89	0.00	0.00	1.16	-1.62
6 c	1.61	0.72	0.00	0.00	0.98	0.14
6 bottom	1.60	0.81	0.00	0.00	1.20	0.16

Summary of the results (Minimum)

Section	Deadload Moment	Deadload Ax.Frc	P.T. Moment	P.T. Ax.Frc	Live load Moment	Live load Ax.Frc
1 a	-0.60	0.05	0.00	0.00	-0.04	0.02
1 b	-1.94	0.22	0.00	0.00	-0.18	0.10
1 c	-5.06	0.75	0.00	0.00	-3.76	0.35
1 right	-6.13	0.95	0.00	0.00	-5.05	0.45
2 left	-4.30	0.98	0.00	0.00	-6.86	-0.58
2 a	-3.43	0.76	0.00	0.00	-5.97	-0.64
2 b	-0.03	-0.09	0.00	0.00	-1.60	-0.42
2 c	0.70	-0.27	0.00	0.00	0.41	-0.12
2 right	-4.30	0.98	0.00	0.00	-6.86	-0.58
3 left	-6.13	0.95	0.00	0.00	-5.05	0.45
3 a	-5.06	0.75	0.00	0.00	-3.76	0.35
3 b	-1.94	0.22	0.00	0.00	-0.18	0.10
3 c	-0.60	0.05	0.00	0.00	-0.04	0.02
3 right	0.00	0.00	0.00	0.00	0.00	0.00
4 left	-1.60	-0.03	0.00	0.00	-1.20	0.68

VEH: R5 - MICHIGAN T BRUG(5.75.44) page 40
date 11/09/2009; time 13:27:50
Cline Avenue - Load Rating - Single Box 28'-4" Wide

Summary of the results (Minimum)

Section	Deadload Moment	Deadload Ax.Frc	P.T. Moment	P.T. Ax.Frc	Live load Moment	Live load Ax.Frc
4 a	-1.09	0.26	0.00	0.00	-1.10	0.71
4 b	1.60	1.82	0.00	0.00	-0.10	1.28
4 c	-1.09	0.26	0.00	0.00	-1.10	0.71
4 right	-1.60	-0.03	0.00	0.00	-1.20	0.68
5 top	-1.83	-3.14	0.00	0.00	-3.69	-3.44
5 a	-1.81	-2.75	0.00	0.00	-3.21	-3.10
5 b	-1.71	-0.89	0.00	0.00	-1.16	-1.62
5 c	-1.61	0.72	0.00	0.00	-0.98	0.14
5 bottom	-1.60	0.81	0.00	0.00	-1.20	0.16
6 top	1.83	-3.14	0.00	0.00	-6.42	-1.55
6 a	1.81	-2.75	0.00	0.00	-5.69	-1.40
6 b	1.71	-0.89	0.00	0.00	-2.71	-0.66
6 c	1.61	0.72	0.00	0.00	-1.00	-0.26
6 bottom	1.60	0.81	0.00	0.00	-1.21	-0.16

VEH: S1 - SPECIAL TR BRUG(5.75.44) page 39
date 11/09/2009; time 13:27:51
Cline Avenue - Load Rating - Single Box 28'-4" Wide

Summary of the results (Maximum)

Section	Deadload Moment	Deadload Ax.Frc	P.T. Moment	P.T. Ax.Frc	Live load Moment	Live load Ax.Frc
1 a	-0.60	0.05	0.00	0.00	0.22	0.02
1 b	-1.94	0.22	0.00	0.00	0.75	0.10
1 c	-5.06	0.75	0.00	0.00	-0.14	0.17
1 right	-6.13	0.95	0.00	0.00	-0.19	0.22
2 left	-4.30	0.98	0.00	0.00	-3.19	0.80
2 a	-3.43	0.76	0.00	0.00	-1.52	1.02
2 b	-0.03	-0.09	0.00	0.00	3.47	0.09
2 c	0.70	-0.27	0.00	0.00	3.95	-0.71
2 right	-4.30	0.98	0.00	0.00	-3.19	0.80
3 left	-6.13	0.95	0.00	0.00	-0.19	0.22
3 a	-5.06	0.75	0.00	0.00	-0.14	0.17
3 b	-1.94	0.22	0.00	0.00	0.75	0.10
3 c	-0.60	0.05	0.00	0.00	0.22	0.02
3 right	0.00	0.00	0.00	0.00	0.00	0.00
4 left	-1.60	-0.03	0.00	0.00	1.09	-0.58
4 a	-1.09	0.26	0.00	0.00	0.99	-0.39
4 b	1.60	1.82	0.00	0.00	-0.01	0.59
4 c	-1.09	0.26	0.00	0.00	0.99	-0.39
4 right	-1.60	-0.03	0.00	0.00	1.09	-0.58
5 top	-1.83	-3.14	0.00	0.00	6.32	-2.09
5 a	-1.81	-2.75	0.00	0.00	5.46	-1.86
5 b	-1.71	-0.89	0.00	0.00	2.44	-0.83
5 c	-1.61	0.72	0.00	0.00	0.91	-0.27
5 bottom	-1.60	0.81	0.00	0.00	1.09	-0.15
6 top	1.83	-3.14	0.00	0.00	3.41	-6.16
6 a	1.81	-2.75	0.00	0.00	2.94	-5.40
6 b	1.71	-0.89	0.00	0.00	1.05	-2.41
6 c	1.61	0.72	0.00	0.00	0.88	0.12
6 bottom	1.60	0.81	0.00	0.00	1.08	0.14

Summary of the results (Minimum)

Section	Deadload Moment	Deadload Ax.Frc	P.T. Moment	P.T. Ax.Frc	Live load Moment	Live load Ax.Frc
1 a	-0.60	0.05	0.00	0.00	-0.07	0.03
1 b	-1.94	0.22	0.00	0.00	-0.24	0.11
1 c	-5.06	0.75	0.00	0.00	-4.61	0.49
1 right	-6.13	0.95	0.00	0.00	-6.68	0.72
2 left	-4.30	0.98	0.00	0.00	-7.38	-0.50
2 a	-3.43	0.76	0.00	0.00	-6.44	-0.56
2 b	-0.03	-0.09	0.00	0.00	-1.71	-0.53
2 c	0.70	-0.27	0.00	0.00	0.39	-0.12
2 right	-4.30	0.98	0.00	0.00	-7.38	-0.50
3 left	-6.13	0.95	0.00	0.00	-6.68	0.72
3 a	-5.06	0.75	0.00	0.00	-4.61	0.49
3 b	-1.94	0.22	0.00	0.00	-0.25	0.11
3 c	-0.60	0.05	0.00	0.00	-0.07	0.03
3 right	0.00	0.00	0.00	0.00	0.00	0.00
4 left	-1.60	-0.03	0.00	0.00	-1.08	0.61

VEH: S1 - SPECIAL TR BRUG(5.75.44) page 40
date 11/09/2009; time 13:27:51
Cline Avenue - Load Rating - Single Box 28'-4" Wide

Summary of the results (Minimum)

Section	Deadload Moment	Deadload Ax.Frc	P.T. Moment	P.T. Ax.Frc	Live load Moment	Live load Ax.Frc
4 a	-1.09	0.26	0.00	0.00	-0.99	0.64
4 b	1.60	1.82	0.00	0.00	-0.09	1.20
4 c	-1.09	0.26	0.00	0.00	-0.99	0.64
4 right	-1.60	-0.03	0.00	0.00	-1.08	0.61
5 top	-1.83	-3.14	0.00	0.00	-3.41	-6.16
5 a	-1.81	-2.75	0.00	0.00	-2.94	-5.40
5 b	-1.71	-0.89	0.00	0.00	-1.05	-2.41
5 c	-1.61	0.72	0.00	0.00	-0.88	0.12
5 bottom	-1.60	0.81	0.00	0.00	-1.08	0.14
6 top	1.83	-3.14	0.00	0.00	-6.32	-2.09
6 a	1.81	-2.75	0.00	0.00	-5.46	-1.86
6 b	1.71	-0.89	0.00	0.00	-2.44	-0.83
6 c	1.61	0.72	0.00	0.00	-0.91	-0.27
6 bottom	1.60	0.81	0.00	0.00	-1.09	-0.15

VEH: S2 - SPECIAL TR BRUG(5.75.44) page 39
date 11/09/2009; time 13:27:51
Cline Avenue - Load Rating - Single Box 28'-4" Wide

Summary of the results (Maximum)

Section	Deadload Moment	Deadload Ax.Frc	P.T. Moment	P.T. Ax.Frc	Live load Moment	Live load Ax.Frc
1 a	-0.60	0.05	0.00	0.00	0.16	0.02
1 b	-1.94	0.22	0.00	0.00	0.63	0.10
1 c	-5.06	0.75	0.00	0.00	-0.13	0.15
1 right	-6.13	0.95	0.00	0.00	-0.17	0.20
2 left	-4.30	0.98	0.00	0.00	-2.73	0.74
2 a	-3.43	0.76	0.00	0.00	-1.24	0.96
2 b	-0.03	-0.09	0.00	0.00	3.21	0.09
2 c	0.70	-0.27	0.00	0.00	3.70	-0.71
2 right	-4.30	0.98	0.00	0.00	-2.73	0.74
3 left	-6.13	0.95	0.00	0.00	-0.17	0.20
3 a	-5.06	0.75	0.00	0.00	-0.13	0.15
3 b	-1.94	0.22	0.00	0.00	0.63	0.10
3 c	-0.60	0.05	0.00	0.00	0.16	0.02
3 right	0.00	0.00	0.00	0.00	0.00	0.00
4 left	-1.60	-0.03	0.00	0.00	1.03	-0.55
4 a	-1.09	0.26	0.00	0.00	0.94	-0.37
4 b	1.60	1.82	0.00	0.00	-0.01	0.61
4 c	-1.09	0.26	0.00	0.00	0.94	-0.37
4 right	-1.60	-0.03	0.00	0.00	1.03	-0.55
5 top	-1.83	-3.14	0.00	0.00	6.10	-1.81
5 a	-1.81	-2.75	0.00	0.00	5.32	-1.61
5 b	-1.71	-0.89	0.00	0.00	2.44	-0.73
5 c	-1.61	0.72	0.00	0.00	0.86	-0.25
5 bottom	-1.60	0.81	0.00	0.00	1.03	-0.14
6 top	1.83	-3.14	0.00	0.00	3.22	-5.30
6 a	1.81	-2.75	0.00	0.00	2.78	-4.59
6 b	1.71	-0.89	0.00	0.00	1.00	-2.02
6 c	1.61	0.72	0.00	0.00	0.83	0.12
6 bottom	1.60	0.81	0.00	0.00	1.02	0.13

Summary of the results (Minimum)

Section	Deadload Moment	Deadload Ax.Frc	P.T. Moment	P.T. Ax.Frc	Live load Moment	Live load Ax.Frc
1 a	-0.60	0.05	0.00	0.00	-0.07	0.03
1 b	-1.94	0.22	0.00	0.00	-0.22	0.10
1 c	-5.06	0.75	0.00	0.00	-4.18	0.45
1 right	-6.13	0.95	0.00	0.00	-5.98	0.65
2 left	-4.30	0.98	0.00	0.00	-6.94	-0.50
2 a	-3.43	0.76	0.00	0.00	-6.06	-0.56
2 b	-0.03	-0.09	0.00	0.00	-1.53	-0.53
2 c	0.70	-0.27	0.00	0.00	0.39	-0.11
2 right	-4.30	0.98	0.00	0.00	-6.94	-0.50
3 left	-6.13	0.95	0.00	0.00	-5.98	0.65
3 a	-5.06	0.75	0.00	0.00	-4.18	0.45
3 b	-1.94	0.22	0.00	0.00	-0.22	0.10
3 c	-0.60	0.05	0.00	0.00	-0.07	0.03
3 right	0.00	0.00	0.00	0.00	0.00	0.00
4 left	-1.60	-0.03	0.00	0.00	-1.02	0.59

VEH: S2 - SPECIAL TR BRUG(5.75.44) page 40
date 11/09/2009; time 13:27:51
Cline Avenue - Load Rating - Single Box 28'-4" Wide

Summary of the results (Minimum)

Section	Deadload Moment	Deadload Ax.Frc	P.T. Moment	P.T. Ax.Frc	Live load Moment	Live load Ax.Frc
4 a	-1.09	0.26	0.00	0.00	-0.94	0.62
4 b	1.60	1.82	0.00	0.00	-0.09	1.22
4 c	-1.09	0.26	0.00	0.00	-0.94	0.62
4 right	-1.60	-0.03	0.00	0.00	-1.02	0.59
5 top	-1.83	-3.14	0.00	0.00	-3.21	-5.30
5 a	-1.81	-2.75	0.00	0.00	-2.78	-4.59
5 b	-1.71	-0.89	0.00	0.00	-1.00	-2.02
5 c	-1.61	0.72	0.00	0.00	-0.83	0.12
5 bottom	-1.60	0.81	0.00	0.00	-1.02	0.13
6 top	1.83	-3.14	0.00	0.00	-6.10	-1.81
6 a	1.81	-2.75	0.00	0.00	-5.32	-1.61
6 b	1.71	-0.89	0.00	0.00	-2.44	-0.73
6 c	1.61	0.72	0.00	0.00	-0.86	-0.25
6 bottom	1.60	0.81	0.00	0.00	-1.03	-0.14

VEH: S3 - SPECIAL TR BRUG(5.75.44) page 39
date 11/09/2009; time 13:27:52
Cline Avenue - Load Rating - Single Box 28'-4" Wide

Summary of the results (Maximum)

Section	--- Deadload ----		----- P.T. ------		--- Live load ---	
	Moment	Ax.Frc	Moment	Ax.Frc	Moment	Ax.Frc
1 a	-0.60	0.05	0.00	0.00	0.14	0.03
1 b	-1.94	0.22	0.00	0.00	0.59	0.14
1 c	-5.06	0.75	0.00	0.00	-0.14	0.18
1 right	-6.13	0.95	0.00	0.00	-0.18	0.24
2 left	-4.30	0.98	0.00	0.00	-3.15	1.47
2 a	-3.43	0.76	0.00	0.00	-1.44	1.19
2 b	-0.03	-0.09	0.00	0.00	3.83	0.12
2 c	0.70	-0.27	0.00	0.00	4.47	-0.94
2 right	-4.30	0.98	0.00	0.00	-3.15	1.47
3 left	-6.13	0.95	0.00	0.00	-0.18	0.24
3 a	-5.06	0.75	0.00	0.00	-0.14	0.18
3 b	-1.94	0.22	0.00	0.00	0.59	0.14
3 c	-0.60	0.05	0.00	0.00	0.14	0.03
3 right	0.00	0.00	0.00	0.00	0.00	0.00
4 left	-1.60	-0.03	0.00	0.00	1.29	-0.69
4 a	-1.09	0.26	0.00	0.00	1.18	-0.47
4 b	1.60	1.82	0.00	0.00	-0.01	0.80
4 c	-1.09	0.26	0.00	0.00	1.18	-0.47
4 right	-1.60	-0.03	0.00	0.00	1.29	-0.69
5 top	-1.83	-3.14	0.00	0.00	7.83	-2.12
5 a	-1.81	-2.75	0.00	0.00	6.88	-1.90
5 b	-1.71	-0.89	0.00	0.00	3.23	-0.88
5 c	-1.61	0.72	0.00	0.00	1.07	-0.31
5 bottom	-1.60	0.81	0.00	0.00	1.29	-0.18
6 top	1.83	-3.14	0.00	0.00	4.03	-5.96
6 a	1.81	-2.75	0.00	0.00	3.49	-5.19
6 b	1.71	-0.89	0.00	0.00	1.26	-2.34
6 c	1.61	0.72	0.00	0.00	1.05	0.15
6 bottom	1.60	0.81	0.00	0.00	1.29	0.17

Summary of the results (Minimum)

Section	--- Deadload ----		----- P.T. ------		--- Live load ---	
	Moment	Ax.Frc	Moment	Ax.Frc	Moment	Ax.Frc
1 a	-0.60	0.05	0.00	0.00	-0.08	0.03
1 b	-1.94	0.22	0.00	0.00	-0.25	0.12
1 c	-5.06	0.75	0.00	0.00	-5.11	0.55
1 right	-6.13	0.95	0.00	0.00	-7.18	0.78
2 left	-4.30	0.98	0.00	0.00	-8.69	-0.68
2 a	-3.43	0.76	0.00	0.00	-7.58	-0.75
2 b	-0.03	-0.09	0.00	0.00	-1.84	-0.70
2 c	0.70	-0.27	0.00	0.00	0.50	-0.14
2 right	-4.30	0.98	0.00	0.00	-8.69	-0.68
3 left	-6.13	0.95	0.00	0.00	-7.18	0.78
3 a	-5.06	0.75	0.00	0.00	-5.11	0.55
3 b	-1.94	0.22	0.00	0.00	-0.25	0.12
3 c	-0.60	0.05	0.00	0.00	-0.08	0.03
3 right	0.00	0.00	0.00	0.00	0.00	0.00
4 left	-1.60	-0.03	0.00	0.00	-1.29	0.75

VEH: S3 - SPECIAL TR BRUG(5.75.44) page 40
date 11/09/2009; time 13:27:52
Cline Avenue - Load Rating - Single Box 28'-4" Wide

Summary of the results (Minimum)

Section	--- Deadload ----		----- P.T. ------		--- Live load ---	
	Moment	Ax.Frc	Moment	Ax.Frc	Moment	Ax.Frc
4 a	-1.09	0.26	0.00	0.00	-1.18	0.79
4 b	1.60	1.82	0.00	0.00	-0.12	1.63
4 c	-1.09	0.26	0.00	0.00	-1.18	0.79
4 right	-1.60	-0.03	0.00	0.00	-1.29	0.75
5 top	-1.83	-3.14	0.00	0.00	-4.03	-5.96
5 a	-1.81	-2.75	0.00	0.00	-3.49	-5.19
5 b	-1.71	-0.89	0.00	0.00	-1.26	-2.34
5 c	-1.61	0.72	0.00	0.00	-1.05	0.15
5 bottom	-1.60	0.81	0.00	0.00	-1.29	0.17
6 top	1.83	-3.14	0.00	0.00	-7.83	-2.12
6 a	1.81	-2.75	0.00	0.00	-6.88	-1.90
6 b	1.71	-0.89	0.00	0.00	-3.22	-0.88
6 c	1.61	0.72	0.00	0.00	-1.07	-0.31
6 bottom	1.60	0.81	0.00	0.00	-1.29	-0.18

VEH: S4 - SUPER LOAD BRUG(5.75.44) page 39
date 11/09/2009; time 13:27:52
Cline Avenue - Load Rating - Single Box 28'-4" Wide

Summary of the results (Maximum)

Section	Deadload Moment	Deadload Ax.Frc	P.T. Moment	P.T. Ax.Frc	Live load Moment	Live load Ax.Frc
1 a	-0.60	0.05	0.00	0.00	0.13	0.02
1 b	-1.94	0.22	0.00	0.00	0.51	0.08
1 c	-5.06	0.75	0.00	0.00	-0.08	0.13
1 right	-6.13	0.95	0.00	0.00	-0.11	0.17
2 left	-4.30	0.98	0.00	0.00	-2.06	0.59
2 a	-3.43	0.76	0.00	0.00	-0.84	0.79
2 b	-0.03	-0.09	0.00	0.00	2.66	0.08
2 c	0.70	-0.27	0.00	0.00	2.98	-0.59
2 right	-4.30	0.98	0.00	0.00	-2.06	0.59
3 left	-6.13	0.95	0.00	0.00	-0.11	0.17
3 a	-5.06	0.75	0.00	0.00	-0.08	0.13
3 b	-1.94	0.22	0.00	0.00	0.51	0.08
3 c	-0.60	0.05	0.00	0.00	0.13	0.02
3 right	0.00	0.00	0.00	0.00	0.00	0.00
4 left	-1.60	-0.03	0.00	0.00	0.90	-0.48
4 a	-1.09	0.26	0.00	0.00	0.82	-0.33
4 b	1.60	1.82	0.00	0.00	0.00	0.49
4 c	-1.09	0.26	0.00	0.00	0.82	-0.33
4 right	-1.60	-0.03	0.00	0.00	0.90	-0.48
5 top	-1.83	-3.14	0.00	0.00	5.07	-1.47
5 a	-1.81	-2.75	0.00	0.00	4.43	-1.31
5 b	-1.71	-0.89	0.00	0.00	2.05	-0.59
5 c	-1.61	0.72	0.00	0.00	0.75	-0.21
5 bottom	-1.60	0.81	0.00	0.00	0.90	-0.12
6 top	1.83	-3.14	0.00	0.00	2.79	-4.32
6 a	1.81	-2.75	0.00	0.00	2.41	-3.76
6 b	1.71	-0.89	0.00	0.00	0.86	-1.67
6 c	1.61	0.72	0.00	0.00	0.73	0.10
6 bottom	1.60	0.81	0.00	0.00	0.89	0.12

Summary of the results (Minimum)

Section	Deadload Moment	Deadload Ax.Frc	P.T. Moment	P.T. Ax.Frc	Live load Moment	Live load Ax.Frc
1 a	-0.60	0.05	0.00	0.00	-0.04	0.02
1 b	-1.94	0.22	0.00	0.00	-0.14	0.08
1 c	-5.06	0.75	0.00	0.00	-3.37	0.35
1 right	-6.13	0.95	0.00	0.00	-4.85	0.51
2 left	-4.30	0.98	0.00	0.00	-5.65	-0.43
2 a	-3.43	0.76	0.00	0.00	-4.93	-0.48
2 b	-0.03	-0.09	0.00	0.00	-1.30	-0.45
2 c	0.70	-0.27	0.00	0.00	0.30	-0.09
2 right	-4.30	0.98	0.00	0.00	-5.65	-0.43
3 left	-6.13	0.95	0.00	0.00	-4.85	0.51
3 a	-5.06	0.75	0.00	0.00	-3.37	0.35
3 b	-1.94	0.22	0.00	0.00	-0.14	0.08
3 c	-0.60	0.05	0.00	0.00	-0.04	0.02
3 right	0.00	0.00	0.00	0.00	0.00	0.00
4 left	-1.60	-0.03	0.00	0.00	-0.89	0.51

VEH: S4 - SUPER LOAD BRUG(5.75.44) page 40
date 11/09/2009; time 13:27:52
Cline Avenue - Load Rating - Single Box 28'-4" Wide

Summary of the results (Minimum)

Section	Deadload Moment	Deadload Ax.Frc	P.T. Moment	P.T. Ax.Frc	Live load Moment	Live load Ax.Frc
4 a	-1.09	0.26	0.00	0.00	-0.82	0.53
4 b	1.60	1.82	0.00	0.00	-0.08	1.00
4 c	-1.09	0.26	0.00	0.00	-0.82	0.53
4 right	-1.60	-0.03	0.00	0.00	-0.89	0.51
5 top	-1.83	-3.14	0.00	0.00	-2.79	-4.32
5 a	-1.81	-2.75	0.00	0.00	-2.41	-3.76
5 b	-1.71	-0.89	0.00	0.00	-0.86	-1.67
5 c	-1.61	0.72	0.00	0.00	-0.73	0.10
5 bottom	-1.60	0.81	0.00	0.00	-0.89	0.12
6 top	1.83	-3.14	0.00	0.00	-5.07	-1.47
6 a	1.81	-2.75	0.00	0.00	-4.43	-1.31
6 b	1.71	-0.89	0.00	0.00	-2.05	-0.59
6 c	1.61	0.72	0.00	0.00	-0.75	-0.21
6 bottom	1.60	0.81	0.00	0.00	-0.90	-0.12

VEH: S5 - SUPERLOAD BRUG(5.75.44) page 39
date 11/09/2009; time 13:27:53
Cline Avenue - Load Rating - Single Box 28'-4" Wide

Summary of the results (Maximum)

Section	--- Deadload ----		----- P.T. ------		--- Live load ---	
	Moment	Ax.Frc	Moment	Ax.Frc	Moment	Ax.Frc
1 a	-0.60	0.05	0.00	0.00	0.24	0.02
1 b	-1.94	0.22	0.00	0.00	1.01	0.12
1 c	-5.06	0.75	0.00	0.00	-0.16	0.11
1 right	-6.13	0.95	0.00	0.00	-0.21	0.14
2 left	-4.30	0.98	0.00	0.00	-2.92	-0.31
2 a	-3.43	0.76	0.00	0.00	-2.24	0.94
2 b	-0.03	-0.09	0.00	0.00	3.28	0.06
2 c	0.70	-0.27	0.00	0.00	4.16	-0.64
2 right	-4.30	0.98	0.00	0.00	-2.92	-0.31
3 left	-6.13	0.95	0.00	0.00	-0.21	0.14
3 a	-5.06	0.75	0.00	0.00	-0.16	0.11
3 b	-1.94	0.22	0.00	0.00	1.01	0.12
3 c	-0.60	0.05	0.00	0.00	0.24	0.02
3 right	0.00	0.00	0.00	0.00	0.00	0.00
4 left	-1.60	-0.03	0.00	0.00	0.73	-0.41
4 a	-1.09	0.26	0.00	0.00	0.66	-0.22
4 b	1.60	1.82	0.00	0.00	0.00	0.60
4 c	-1.09	0.26	0.00	0.00	0.66	-0.22
4 right	-1.60	-0.03	0.00	0.00	0.73	-0.41
5 top	-1.83	-3.14	0.00	0.00	5.52	-1.95
5 a	-1.81	-2.75	0.00	0.00	4.74	-1.73
5 b	-1.71	-0.89	0.00	0.00	2.10	-0.78
5 c	-1.61	0.72	0.00	0.00	0.60	-0.22
5 bottom	-1.60	0.81	0.00	0.00	0.73	-0.11
6 top	1.83	-3.14	0.00	0.00	2.38	-6.69
6 a	1.81	-2.75	0.00	0.00	2.04	-5.71
6 b	1.71	-0.89	0.00	0.00	0.72	-2.31
6 c	1.61	0.72	0.00	0.00	0.58	0.08
6 bottom	1.60	0.81	0.00	0.00	0.72	0.10

Summary of the results (Minimum)

Section	--- Deadload ----		----- P.T. ------		--- Live load ---	
	Moment	Ax.Frc	Moment	Ax.Frc	Moment	Ax.Frc
1 a	-0.60	0.05	0.00	0.00	-0.10	0.03
1 b	-1.94	0.22	0.00	0.00	-0.32	0.11
1 c	-5.06	0.75	0.00	0.00	-4.44	0.55
1 right	-6.13	0.95	0.00	0.00	-6.62	0.84
2 left	-4.30	0.98	0.00	0.00	-7.54	-0.18
2 a	-3.43	0.76	0.00	0.00	-5.87	-0.48
2 b	-0.03	-0.09	0.00	0.00	-1.35	-0.45
2 c	0.70	-0.27	0.00	0.00	0.36	-0.10
2 right	-4.30	0.98	0.00	0.00	-7.54	-0.18
3 left	-6.13	0.95	0.00	0.00	-6.62	0.84
3 a	-5.06	0.75	0.00	0.00	-4.44	0.55
3 b	-1.94	0.22	0.00	0.00	-0.32	0.11
3 c	-0.60	0.05	0.00	0.00	-0.10	0.03
3 right	0.00	0.00	0.00	0.00	0.00	0.00
4 left	-1.60	-0.03	0.00	0.00	-0.72	0.44

VEH: S5 - SUPERLOAD BRUG(5.75.44) page 40
date 11/09/2009; time 13:27:53
Cline Avenue - Load Rating - Single Box 28'-4" Wide

Summary of the results (Minimum)

Section	--- Deadload ----		----- P.T. ------		--- Live load ---	
	Moment	Ax.Frc	Moment	Ax.Frc	Moment	Ax.Frc
4 a	-1.09	0.26	0.00	0.00	-0.66	0.47
4 b	1.60	1.82	0.00	0.00	-0.08	1.17
4 c	-1.09	0.26	0.00	0.00	-0.66	0.47
4 right	-1.60	-0.03	0.00	0.00	-0.72	0.44
5 top	-1.83	-3.14	0.00	0.00	-2.38	-6.69
5 a	-1.81	-2.75	0.00	0.00	-2.04	-5.71
5 b	-1.71	-0.89	0.00	0.00	-0.72	-2.31
5 c	-1.61	0.72	0.00	0.00	-0.58	0.08
5 bottom	-1.60	0.81	0.00	0.00	-0.72	0.10
6 top	1.83	-3.14	0.00	0.00	-5.52	-1.95
6 a	1.81	-2.75	0.00	0.00	-4.74	-1.73
6 b	1.71	-0.89	0.00	0.00	-2.10	-0.78
6 c	1.61	0.72	0.00	0.00	-0.60	-0.22
6 bottom	1.60	0.81	0.00	0.00	-0.73	-0.11

VEH: HL93- TRUCK BRUG(5.75.44) page 39
date 11/09/2009; time 13:27:54
Cline Avenue - Load Rating - Single Box 28'-4" Wide

Summary of the results (Maximum)

Section	Deadload Moment	Deadload Ax.Frc	P.T. Moment	P.T. Ax.Frc	Live load Moment	Live load Ax.Frc
1 a	-0.60	0.05	0.00	0.00	0.32	0.01
1 b	-1.94	0.22	0.00	0.00	1.41	0.07
1 c	-5.06	0.75	0.00	0.00	-0.10	0.12
1 right	-6.13	0.95	0.00	0.00	-0.14	0.15
2 left	-4.30	0.98	0.00	0.00	-2.92	-0.31
2 a	-3.43	0.76	0.00	0.00	-1.87	0.92
2 b	-0.03	-0.09	0.00	0.00	3.57	0.04
2 c	0.70	-0.27	0.00	0.00	5.02	-0.76
2 right	-4.30	0.98	0.00	0.00	-2.92	-0.31
3 left	-6.13	0.95	0.00	0.00	-0.14	0.15
3 a	-5.06	0.75	0.00	0.00	-0.10	0.12
3 b	-1.94	0.22	0.00	0.00	1.41	0.07
3 c	-0.60	0.05	0.00	0.00	0.32	0.01
3 right	0.00	0.00	0.00	0.00	0.00	0.00
4 left	-1.60	-0.03	0.00	0.00	0.79	-0.44
4 a	-1.09	0.26	0.00	0.00	0.71	-0.27
4 b	1.60	1.82	0.00	0.00	0.00	0.49
4 c	-1.09	0.26	0.00	0.00	0.71	-0.27
4 right	-1.60	-0.03	0.00	0.00	0.79	-0.44
5 top	-1.83	-3.14	0.00	0.00	7.52	-6.02
5 a	-1.81	-2.75	0.00	0.00	6.16	-5.09
5 b	-1.71	-0.89	0.00	0.00	2.59	-1.85
5 c	-1.61	0.72	0.00	0.00	0.65	-0.23
5 bottom	-1.60	0.81	0.00	0.00	0.79	-0.12
6 top	1.83	-3.14	0.00	0.00	2.56	-7.76
6 a	1.81	-2.75	0.00	0.00	2.18	-6.56
6 b	1.71	-0.89	0.00	0.00	0.76	-2.44
6 c	1.61	0.72	0.00	0.00	0.63	0.09
6 bottom	1.60	0.81	0.00	0.00	0.77	0.10

Summary of the results (Minimum)

Section	Deadload Moment	Deadload Ax.Frc	P.T. Moment	P.T. Ax.Frc	Live load Moment	Live load Ax.Frc
1 a	-0.60	0.05	0.00	0.00	-0.06	0.03
1 b	-1.94	0.22	0.00	0.00	-0.23	0.13
1 c	-5.06	0.75	0.00	0.00	-4.88	0.75
1 right	-6.13	0.95	0.00	0.00	-7.62	1.19
2 left	-4.30	0.98	0.00	0.00	-10.18	0.89
2 a	-3.43	0.76	0.00	0.00	-7.50	0.33
2 b	-0.03	-0.09	0.00	0.00	-1.68	-0.56
2 c	0.70	-0.27	0.00	0.00	0.26	-0.10
2 right	-4.30	0.98	0.00	0.00	-10.18	0.89
3 left	-6.13	0.95	0.00	0.00	-7.62	1.19
3 a	-5.06	0.75	0.00	0.00	-4.88	0.75
3 b	-1.94	0.22	0.00	0.00	-0.23	0.13
3 c	-0.60	0.05	0.00	0.00	-0.06	0.03
3 right	0.00	0.00	0.00	0.00	0.00	0.00
4 left	-1.60	-0.03	0.00	0.00	-0.77	0.46

VEH: HL93- TRUCK BRUG(5.75.44) page 40
date 11/09/2009; time 13:27:54
Cline Avenue - Load Rating - Single Box 28'-4" Wide

Summary of the results (Minimum)

Section	Deadload Moment	Deadload Ax.Frc	P.T. Moment	P.T. Ax.Frc	Live load Moment	Live load Ax.Frc
4 a	-1.09	0.26	0.00	0.00	-0.71	0.48
4 b	1.60	1.82	0.00	0.00	-0.09	1.56
4 c	-1.09	0.26	0.00	0.00	-0.71	0.48
4 right	-1.60	-0.03	0.00	0.00	-0.77	0.46
5 top	-1.83	-3.14	0.00	0.00	-2.56	-7.76
5 a	-1.81	-2.75	0.00	0.00	-2.18	-6.56
5 b	-1.71	-0.89	0.00	0.00	-0.76	-2.44
5 c	-1.61	0.72	0.00	0.00	-0.63	0.09
5 bottom	-1.60	0.81	0.00	0.00	-0.77	0.10
6 top	1.83	-3.14	0.00	0.00	-7.52	-6.02
6 a	1.81	-2.75	0.00	0.00	-6.16	-5.09
6 b	1.71	-0.89	0.00	0.00	-2.59	-1.85
6 c	1.61	0.72	0.00	0.00	-0.65	-0.23
6 bottom	1.60	0.81	0.00	0.00	-0.79	-0.12

VEH: HL93- TANDEM BRUG(5.75.44) page 39
date 11/09/2009; time 13:27:53
Cline Avenue - Load Rating - Single Box 28'-4" Wide

Summary of the results (Maximum)

Section	Deadload Moment	Deadload Ax.Frc	P.T. Moment	P.T. Ax.Frc	Live load Moment	Live load Ax.Frc
1 a	-0.60	0.05	0.00	0.00	0.25	0.03
1 b	-1.94	0.22	0.00	0.00	0.80	0.13
1 c	-5.06	0.75	0.00	0.00	-0.18	0.09
1 right	-6.13	0.95	0.00	0.00	-0.25	0.12
2 left	-4.30	0.98	0.00	0.00	-2.61	-0.27
2 a	-3.43	0.76	0.00	0.00	-2.38	-0.28
2 b	-0.03	-0.09	0.00	0.00	2.98	0.05
2 c	0.70	-0.27	0.00	0.00	4.69	-0.78
2 right	-4.30	0.98	0.00	0.00	-2.62	-0.27
3 left	-6.13	0.95	0.00	0.00	-0.25	0.12
3 a	-5.06	0.75	0.00	0.00	-0.18	0.09
3 b	-1.94	0.22	0.00	0.00	0.80	0.13
3 c	-0.60	0.05	0.00	0.00	0.25	0.03
3 right	0.00	0.00	0.00	0.00	0.00	0.00
4 left	-1.60	-0.03	0.00	0.00	0.62	-0.36
4 a	-1.09	0.26	0.00	0.00	0.56	-0.16
4 b	1.60	1.82	0.00	0.00	-0.01	0.58
4 c	-1.09	0.26	0.00	0.00	0.56	-0.16
4 right	-1.60	-0.03	0.00	0.00	0.62	-0.36
5 top	-1.83	-3.14	0.00	0.00	7.50	-5.24
5 a	-1.81	-2.75	0.00	0.00	6.25	-4.59
5 b	-1.71	-0.89	0.00	0.00	2.60	-1.97
5 c	-1.61	0.72	0.00	0.00	0.51	-0.22
5 bottom	-1.60	0.81	0.00	0.00	0.62	-0.09
6 top	1.83	-3.14	0.00	0.00	2.05	-6.62
6 a	1.81	-2.75	0.00	0.00	1.75	-5.80
6 b	1.71	-0.89	0.00	0.00	0.61	-2.54
6 c	1.61	0.72	0.00	0.00	0.48	0.06
6 bottom	1.60	0.81	0.00	0.00	0.60	0.08

Summary of the results (Minimum)

Section	Deadload Moment	Deadload Ax.Frc	P.T. Moment	P.T. Ax.Frc	Live load Moment	Live load Ax.Frc
1 a	-0.60	0.05	0.00	0.00	-0.12	0.04
1 b	-1.94	0.22	0.00	0.00	-0.40	0.16
1 c	-5.06	0.75	0.00	0.00	-5.71	0.88
1 right	-6.13	0.95	0.00	0.00	-8.25	1.23
2 left	-4.30	0.98	0.00	0.00	-11.41	0.85
2 a	-3.43	0.76	0.00	0.00	-8.65	0.50
2 b	-0.03	-0.09	0.00	0.00	-1.29	-0.43
2 c	0.70	-0.27	0.00	0.00	0.38	-0.10
2 right	-4.30	0.98	0.00	0.00	-11.41	0.85
3 left	-6.13	0.95	0.00	0.00	-8.25	1.23
3 a	-5.06	0.75	0.00	0.00	-5.71	0.88
3 b	-1.94	0.22	0.00	0.00	-0.40	0.16
3 c	-0.60	0.05	0.00	0.00	-0.12	0.04
3 right	0.00	0.00	0.00	0.00	0.00	0.00
4 left	-1.60	-0.03	0.00	0.00	-0.60	0.38

VEH: HL93- TANDEM BRUG(5.75.44) page 40
date 11/09/2009; time 13:27:53
Cline Avenue - Load Rating - Single Box 28'-4" Wide

Summary of the results (Minimum)

Section	Deadload Moment	Deadload Ax.Frc	P.T. Moment	P.T. Ax.Frc	Live load Moment	Live load Ax.Frc
4 a	-1.09	0.26	0.00	0.00	-0.54	0.42
4 b	1.60	1.82	0.00	0.00	-0.08	1.77
4 c	-1.09	0.26	0.00	0.00	-0.54	0.42
4 right	-1.60	-0.03	0.00	0.00	-0.60	0.38
5 top	-1.83	-3.14	0.00	0.00	-2.05	-6.62
5 a	-1.81	-2.75	0.00	0.00	-1.75	-5.80
5 b	-1.71	-0.89	0.00	0.00	-0.61	-2.54
5 c	-1.61	0.72	0.00	0.00	-0.48	0.06
5 bottom	-1.60	0.81	0.00	0.00	-0.60	0.08
6 top	1.83	-3.14	0.00	0.00	-7.50	-5.24
6 a	1.81	-2.75	0.00	0.00	-6.25	-4.59
6 b	1.71	-0.89	0.00	0.00	-2.60	-1.97
6 c	1.61	0.72	0.00	0.00	-0.51	-0.22
6 bottom	1.60	0.81	0.00	0.00	-0.62	-0.09

VEH: R1 - TOLL ROAD BRUG(5.75.44) page 39
date 11/09/2009; time 13:27:55
Cline Avenue - Load Rating - Single Box 28'-4" Wide

Summary of the results (Maximum)

Section	Deadload Moment	Deadload Ax.Frc	P.T. Moment	P.T. Ax.Frc	Live load Moment	Live load Ax.Frc
1 a	-0.60	0.05	0.00	0.00	0.12	0.02
1 b	-1.94	0.22	0.00	0.00	0.49	0.09
1 c	-5.06	0.75	0.00	0.00	-0.07	0.13
1 right	-6.13	0.95	0.00	0.00	-0.09	0.17
2 left	-4.30	0.98	0.00	0.00	-2.36	1.09
2 a	-3.43	0.76	0.00	0.00	-1.05	0.87
2 b	-0.03	-0.09	0.00	0.00	2.84	0.08
2 c	0.70	-0.27	0.00	0.00	3.94	-0.89
2 right	-4.30	0.98	0.00	0.00	-2.36	1.09
3 left	-6.13	0.95	0.00	0.00	-0.09	0.17
3 a	-5.06	0.75	0.00	0.00	-0.07	0.13
3 b	-1.94	0.22	0.00	0.00	0.49	0.09
3 c	-0.60	0.05	0.00	0.00	0.12	0.02
3 right	0.00	0.00	0.00	0.00	0.00	0.00
4 left	-1.60	-0.03	0.00	0.00	0.95	-0.51
4 a	-1.09	0.26	0.00	0.00	0.87	-0.35
4 b	1.60	1.82	0.00	0.00	0.00	0.57
4 c	-1.09	0.26	0.00	0.00	0.87	-0.35
4 right	-1.60	-0.03	0.00	0.00	0.95	-0.51
5 top	-1.83	-3.14	0.00	0.00	7.79	-3.87
5 a	-1.81	-2.75	0.00	0.00	6.73	-3.37
5 b	-1.71	-0.89	0.00	0.00	3.12	-1.43
5 c	-1.61	0.72	0.00	0.00	0.79	-0.23
5 bottom	-1.60	0.81	0.00	0.00	0.95	-0.13
6 top	1.83	-3.14	0.00	0.00	2.98	-4.63
6 a	1.81	-2.75	0.00	0.00	2.58	-4.04
6 b	1.71	-0.89	0.00	0.00	0.92	-1.79
6 c	1.61	0.72	0.00	0.00	0.77	0.11
6 bottom	1.60	0.81	0.00	0.00	0.95	0.13

Summary of the results (Minimum)

Section	Deadload Moment	Deadload Ax.Frc	P.T. Moment	P.T. Ax.Frc	Live load Moment	Live load Ax.Frc
1 a	-0.60	0.05	0.00	0.00	-0.05	0.03
1 b	-1.94	0.22	0.00	0.00	-0.15	0.13
1 c	-5.06	0.75	0.00	0.00	-4.11	0.61
1 right	-6.13	0.95	0.00	0.00	-5.84	0.86
2 left	-4.30	0.98	0.00	0.00	-8.62	-0.44
2 a	-3.43	0.76	0.00	0.00	-6.66	0.01
2 b	-0.03	-0.09	0.00	0.00	-1.37	-0.52
2 c	0.70	-0.27	0.00	0.00	0.35	-0.11
2 right	-4.30	0.98	0.00	0.00	-8.62	-0.44
3 left	-6.13	0.95	0.00	0.00	-5.84	0.86
3 a	-5.06	0.75	0.00	0.00	-4.11	0.61
3 b	-1.94	0.22	0.00	0.00	-0.15	0.13
3 c	-0.60	0.05	0.00	0.00	-0.05	0.03
3 right	0.00	0.00	0.00	0.00	0.00	0.00
4 left	-1.60	-0.03	0.00	0.00	-0.95	0.55

VEH: R1 - TOLL ROAD BRUG(5.75.44) page 40
date 11/09/2009; time 13:27:55
Cline Avenue - Load Rating - Single Box 28'-4" Wide

Summary of the results (Minimum)

Section	Deadload Moment	Deadload Ax.Frc	P.T. Moment	P.T. Ax.Frc	Live load Moment	Live load Ax.Frc
4 a	-1.09	0.26	0.00	0.00	-0.87	0.58
4 b	1.60	1.82	0.00	0.00	-0.11	1.81
4 c	-1.09	0.26	0.00	0.00	-0.87	0.58
4 right	-1.60	-0.03	0.00	0.00	-0.95	0.55
5 top	-1.83	-3.14	0.00	0.00	-2.98	-4.63
5 a	-1.81	-2.75	0.00	0.00	-2.58	-4.04
5 b	-1.71	-0.89	0.00	0.00	-0.92	-1.79
5 c	-1.61	0.72	0.00	0.00	-0.77	0.11
5 bottom	-1.60	0.81	0.00	0.00	-0.95	0.13
6 top	1.83	-3.14	0.00	0.00	-7.78	-3.87
6 a	1.81	-2.75	0.00	0.00	-6.73	-3.37
6 b	1.71	-0.89	0.00	0.00	-3.12	-1.43
6 c	1.61	0.72	0.00	0.00	-0.79	-0.23
6 bottom	1.60	0.81	0.00	0.00	-0.95	-0.13

VEH: R2 - TOLL ROAD BRUG(5.75.44) page 39
date 11/09/2009; time 13:27:55
Cline Avenue - Load Rating - Single Box 28'-4" Wide

Summary of the results (Maximum)

Section	Deadload Moment	Deadload Ax.Frc	P.T. Moment	P.T. Ax.Frc	Live load Moment	Live load Ax.Frc
1 a	-0.60	0.05	0.00	0.00	0.17	0.01
1 b	-1.94	0.22	0.00	0.00	0.82	0.05
1 c	-5.06	0.75	0.00	0.00	0.06	0.37
1 right	-6.13	0.95	0.00	0.00	-0.07	0.16
2 left	-4.30	0.98	0.00	0.00	-1.91	0.65
2 a	-3.43	0.76	0.00	0.00	-0.72	0.77
2 b	-0.03	-0.09	0.00	0.00	2.84	0.06
2 c	0.70	-0.27	0.00	0.00	3.77	-0.72
2 right	-4.30	0.98	0.00	0.00	-1.91	0.65
3 left	-6.13	0.95	0.00	0.00	-0.07	0.16
3 a	-5.06	0.75	0.00	0.00	0.06	0.37
3 b	-1.94	0.22	0.00	0.00	0.82	0.05
3 c	-0.60	0.05	0.00	0.00	0.17	0.01
3 right	0.00	0.00	0.00	0.00	0.00	0.00
4 left	-1.60	-0.03	0.00	0.00	0.86	-0.46
4 a	-1.09	0.26	0.00	0.00	0.79	-0.33
4 b	1.60	1.82	0.00	0.00	0.00	0.45
4 c	-1.09	0.26	0.00	0.00	0.79	-0.33
4 right	-1.60	-0.03	0.00	0.00	0.86	-0.46
5 top	-1.83	-3.14	0.00	0.00	6.69	-4.11
5 a	-1.81	-2.75	0.00	0.00	5.71	-3.49
5 b	-1.71	-0.89	0.00	0.00	2.58	-1.29
5 c	-1.61	0.72	0.00	0.00	0.72	-0.20
5 bottom	-1.60	0.81	0.00	0.00	0.86	-0.12
6 top	1.83	-3.14	0.00	0.00	2.72	-5.10
6 a	1.81	-2.75	0.00	0.00	2.33	-4.32
6 b	1.71	-0.89	0.00	0.00	0.83	-1.64
6 c	1.61	0.72	0.00	0.00	0.70	0.10
6 bottom	1.60	0.81	0.00	0.00	0.86	0.11

Summary of the results (Minimum)

Section	Deadload Moment	Deadload Ax.Frc	P.T. Moment	P.T. Ax.Frc	Live load Moment	Live load Ax.Frc
1 a	-0.60	0.05	0.00	0.00	-0.03	0.02
1 b	-1.94	0.22	0.00	0.00	-0.11	0.10
1 c	-5.06	0.75	0.00	0.00	-3.52	0.53
1 right	-6.13	0.95	0.00	0.00	-5.31	0.82
2 left	-4.30	0.98	0.00	0.00	-7.53	-0.33
2 a	-3.43	0.76	0.00	0.00	-5.57	0.05
2 b	-0.03	-0.09	0.00	0.00	-1.29	-0.43
2 c	0.70	-0.27	0.00	0.00	0.24	-0.09
2 right	-4.30	0.98	0.00	0.00	-7.53	-0.33
3 left	-6.13	0.95	0.00	0.00	-5.31	0.82
3 a	-5.06	0.75	0.00	0.00	-3.52	0.53
3 b	-1.94	0.22	0.00	0.00	-0.11	0.10
3 c	-0.60	0.05	0.00	0.00	-0.03	0.02
3 right	0.00	0.00	0.00	0.00	0.00	0.00
4 left	-1.60	-0.03	0.00	0.00	-0.86	0.49

VEH: R2 - TOLL ROAD BRUG(5.75.44) page 40
date 11/09/2009; time 13:27:55
Cline Avenue - Load Rating - Single Box 28'-4" Wide

Summary of the results (Minimum)

Section	Deadload Moment	Deadload Ax.Frc	P.T. Moment	P.T. Ax.Frc	Live load Moment	Live load Ax.Frc
4 a	-1.09	0.26	0.00	0.00	-0.79	0.51
4 b	1.60	1.82	0.00	0.00	-0.09	1.45
4 c	-1.09	0.26	0.00	0.00	-0.79	0.51
4 right	-1.60	-0.03	0.00	0.00	-0.86	0.49
5 top	-1.83	-3.14	0.00	0.00	-2.72	-5.10
5 a	-1.81	-2.75	0.00	0.00	-2.33	-4.32
5 b	-1.71	-0.89	0.00	0.00	-0.83	-1.64
5 c	-1.61	0.72	0.00	0.00	-0.70	0.10
5 bottom	-1.60	0.81	0.00	0.00	-0.86	0.11
6 top	1.83	-3.14	0.00	0.00	-6.69	-4.11
6 a	1.81	-2.75	0.00	0.00	-5.70	-3.49
6 b	1.71	-0.89	0.00	0.00	-2.58	-1.29
6 c	1.61	0.72	0.00	0.00	-0.72	-0.20
6 bottom	1.60	0.81	0.00	0.00	-0.86	-0.12

VEH: R3 - TOLL ROAD BRUG(5.75.44) page 39
date 11/09/2009; time 13:27:56
Cline Avenue - Load Rating - Single Box 28'-4" Wide

Summary of the results (Maximum)

Section	Deadload Moment	Deadload Ax.Frc	P.T. Moment	P.T. Ax.Frc	Live load Moment	Live load Ax.Frc
1 a	-0.60	0.05	0.00	0.00	0.17	0.01
1 b	-1.94	0.22	0.00	0.00	0.59	0.07
1 c	-5.06	0.75	0.00	0.00	-0.12	0.14
1 right	-6.13	0.95	0.00	0.00	-0.16	0.18
2 left	-4.30	0.98	0.00	0.00	-2.31	0.63
2 a	-3.43	0.76	0.00	0.00	-1.03	0.79
2 b	-0.03	-0.09	0.00	0.00	2.71	0.07
2 c	0.70	-0.27	0.00	0.00	3.58	-0.66
2 right	-4.30	0.98	0.00	0.00	-2.31	0.63
3 left	-6.13	0.95	0.00	0.00	-0.16	0.18
3 a	-5.06	0.75	0.00	0.00	-0.12	0.14
3 b	-1.94	0.22	0.00	0.00	0.59	0.07
3 c	-0.60	0.05	0.00	0.00	0.18	0.01
3 right	0.00	0.00	0.00	0.00	0.00	0.00
4 left	-1.60	-0.03	0.00	0.00	0.88	-0.46
4 a	-1.09	0.26	0.00	0.00	0.80	-0.31
4 b	1.60	1.82	0.00	0.00	0.00	0.45
4 c	-1.09	0.26	0.00	0.00	0.80	-0.31
4 right	-1.60	-0.03	0.00	0.00	0.88	-0.46
5 top	-1.83	-3.14	0.00	0.00	6.62	-3.95
5 a	-1.81	-2.75	0.00	0.00	5.61	-3.45
5 b	-1.71	-0.89	0.00	0.00	2.42	-1.45
5 c	-1.61	0.72	0.00	0.00	0.73	-0.21
5 bottom	-1.60	0.81	0.00	0.00	0.88	-0.12
6 top	1.83	-3.14	0.00	0.00	2.72	-4.74
6 a	1.81	-2.75	0.00	0.00	2.35	-4.16
6 b	1.71	-0.89	0.00	0.00	0.84	-1.86
6 c	1.61	0.72	0.00	0.00	0.71	0.10
6 bottom	1.60	0.81	0.00	0.00	0.87	0.11

Summary of the results (Minimum)

Section	Deadload Moment	Deadload Ax.Frc	P.T. Moment	P.T. Ax.Frc	Live load Moment	Live load Ax.Frc
1 a	-0.60	0.05	0.00	0.00	-0.06	0.03
1 b	-1.94	0.22	0.00	0.00	-0.21	0.13
1 c	-5.06	0.75	0.00	0.00	-4.06	0.60
1 right	-6.13	0.95	0.00	0.00	-5.90	0.85
2 left	-4.30	0.98	0.00	0.00	-7.93	-0.26
2 a	-3.43	0.76	0.00	0.00	-6.11	0.12
2 b	-0.03	-0.09	0.00	0.00	-1.36	-0.40
2 c	0.70	-0.27	0.00	0.00	0.29	-0.09
2 right	-4.30	0.98	0.00	0.00	-7.93	-0.26
3 left	-6.13	0.95	0.00	0.00	-5.90	0.85
3 a	-5.06	0.75	0.00	0.00	-4.06	0.60
3 b	-1.94	0.22	0.00	0.00	-0.21	0.13
3 c	-0.60	0.05	0.00	0.00	-0.06	0.03
3 right	0.00	0.00	0.00	0.00	0.00	0.00
4 left	-1.60	-0.03	0.00	0.00	-0.87	0.48

VEH: R3 - TOLL ROAD BRUG(5.75.44) page 40
date 11/09/2009; time 13:27:56
Cline Avenue - Load Rating - Single Box 28'-4" Wide

Summary of the results (Minimum)

Section	Deadload Moment	Deadload Ax.Frc	P.T. Moment	P.T. Ax.Frc	Live load Moment	Live load Ax.Frc
4 a	-1.09	0.26	0.00	0.00	-0.79	0.50
4 b	1.60	1.82	0.00	0.00	-0.08	1.40
4 c	-1.09	0.26	0.00	0.00	-0.79	0.50
4 right	-1.60	-0.03	0.00	0.00	-0.87	0.48
5 top	-1.83	-3.14	0.00	0.00	-2.72	-4.74
5 a	-1.81	-2.75	0.00	0.00	-2.35	-4.16
5 b	-1.71	-0.89	0.00	0.00	-0.84	-1.86
5 c	-1.61	0.72	0.00	0.00	-0.71	0.10
5 bottom	-1.60	0.81	0.00	0.00	-0.87	0.11
6 top	1.83	-3.14	0.00	0.00	-6.62	-3.95
6 a	1.81	-2.75	0.00	0.00	-5.61	-3.45
6 b	1.71	-0.89	0.00	0.00	-2.42	-1.45
6 c	1.61	0.72	0.00	0.00	-0.73	-0.21
6 bottom	1.60	0.81	0.00	0.00	-0.88	-0.12

VEH: R4 - MICHIGAN T BRUG(5.75.44) page 39
date 11/09/2009; time 13:27:56
Cline Avenue - Load Rating - Single Box 28'-4" Wide

Summary of the results (Maximum)

Section	Deadload Moment	Deadload Ax.Frc	P.T. Moment	P.T. Ax.Frc	Live load Moment	Live load Ax.Frc
1 a	-0.60	0.05	0.00	0.00	0.10	0.01
1 b	-1.94	0.22	0.00	0.00	0.52	0.03
1 c	-5.06	0.75	0.00	0.00	0.18	0.16
1 right	-6.13	0.95	0.00	0.00	-0.03	0.21
2 left	-4.30	0.98	0.00	0.00	-0.71	0.97
2 a	-3.43	0.76	0.00	0.00	0.30	0.76
2 b	-0.03	-0.09	0.00	0.00	2.77	0.09
2 c	0.70	-0.27	0.00	0.00	3.27	-0.77
2 right	-4.30	0.98	0.00	0.00	-0.71	0.97
3 left	-6.13	0.95	0.00	0.00	-0.03	0.21
3 a	-5.06	0.75	0.00	0.00	0.18	0.16
3 b	-1.94	0.22	0.00	0.00	0.52	0.03
3 c	-0.60	0.05	0.00	0.00	0.10	0.01
3 right	0.00	0.00	0.00	0.00	0.00	0.00
4 left	-1.60	-0.03	0.00	0.00	1.12	-0.58
4 a	-1.09	0.26	0.00	0.00	1.03	-0.45
4 b	1.60	1.82	0.00	0.00	0.00	0.45
4 c	-1.09	0.26	0.00	0.00	1.03	-0.45
4 right	-1.60	-0.03	0.00	0.00	1.12	-0.58
5 top	-1.83	-3.14	0.00	0.00	7.01	-3.28
5 a	-1.81	-2.75	0.00	0.00	6.12	-2.81
5 b	-1.71	-0.89	0.00	0.00	2.88	-1.06
5 c	-1.61	0.72	0.00	0.00	0.93	-0.22
5 bottom	-1.60	0.81	0.00	0.00	1.12	-0.15
6 top	1.83	-3.14	0.00	0.00	3.43	-3.81
6 a	1.81	-2.75	0.00	0.00	2.97	-3.25
6 b	1.71	-0.89	0.00	0.00	1.07	-1.30
6 c	1.61	0.72	0.00	0.00	0.92	0.13
6 bottom	1.60	0.81	0.00	0.00	1.12	0.15

Summary of the results (Minimum)

Section	Deadload Moment	Deadload Ax.Frc	P.T. Moment	P.T. Ax.Frc	Live load Moment	Live load Ax.Frc
1 a	-0.60	0.05	0.00	0.00	-0.01	0.02
1 b	-1.94	0.22	0.00	0.00	-0.02	0.10
1 c	-5.06	0.75	0.00	0.00	-2.89	0.33
1 right	-6.13	0.95	0.00	0.00	-4.23	0.62
2 left	-4.30	0.98	0.00	0.00	-7.28	-0.45
2 a	-3.43	0.76	0.00	0.00	-5.34	-0.57
2 b	-0.03	-0.09	0.00	0.00	-1.44	-0.35
2 c	0.70	-0.27	0.00	0.00	0.25	-0.09
2 right	-4.30	0.98	0.00	0.00	-7.28	-0.45
3 left	-6.13	0.95	0.00	0.00	-4.23	0.62
3 a	-5.06	0.75	0.00	0.00	-2.89	0.33
3 b	-1.94	0.22	0.00	0.00	-0.02	0.10
3 c	-0.60	0.05	0.00	0.00	-0.01	0.02
3 right	0.00	0.00	0.00	0.00	0.00	0.00
4 left	-1.60	-0.03	0.00	0.00	-1.12	0.61

VEH: R4 - MICHIGAN T BRUG(5.75.44) page 40
date 11/09/2009; time 13:27:56
Cline Avenue - Load Rating - Single Box 28'-4" Wide

Summary of the results (Minimum)

Section	Deadload Moment	Deadload Ax.Frc	P.T. Moment	P.T. Ax.Frc	Live load Moment	Live load Ax.Frc
4 a	-1.09	0.26	0.00	0.00	-1.03	0.63
4 b	1.60	1.82	0.00	0.00	-0.10	1.47
4 c	-1.09	0.26	0.00	0.00	-1.03	0.63
4 right	-1.60	-0.03	0.00	0.00	-1.12	0.61
5 top	-1.83	-3.14	0.00	0.00	-3.43	-3.81
5 a	-1.81	-2.75	0.00	0.00	-2.97	-3.25
5 b	-1.71	-0.89	0.00	0.00	-1.07	-1.30
5 c	-1.61	0.72	0.00	0.00	-0.92	0.13
5 bottom	-1.60	0.81	0.00	0.00	-1.12	0.15
6 top	1.83	-3.14	0.00	0.00	-7.01	-3.28
6 a	1.81	-2.75	0.00	0.00	-6.11	-2.81
6 b	1.71	-0.89	0.00	0.00	-2.88	-1.06
6 c	1.61	0.72	0.00	0.00	-0.93	-0.22
6 bottom	1.60	0.81	0.00	0.00	-1.12	-0.15

VEH: R5 - MICHIGAN T BRUG(5.75.44) page 39
date 11/09/2009; time 13:27:57
Cline Avenue - Load Rating - Single Box 28'-4" Wide

Summary of the results (Maximum)

Section	--- Deadload ----		----- P.T. ------		--- Live load ---	
	Moment	Ax.Frc	Moment	Ax.Frc	Moment	Ax.Frc
1 a	-0.60	0.05	0.00	0.00	0.04	0.02
1 b	-1.94	0.22	0.00	0.00	0.11	0.10
1 c	-5.06	0.75	0.00	0.00	-0.08	0.18
1 right	-6.13	0.95	0.00	0.00	-0.10	0.23
2 left	-4.30	0.98	0.00	0.00	-1.36	1.08
2 a	-3.43	0.76	0.00	0.00	-0.44	0.92
2 b	-0.03	-0.09	0.00	0.00	2.85	-0.18
2 c	0.70	-0.27	0.00	0.00	3.66	-0.97
2 right	-4.30	0.98	0.00	0.00	-1.36	1.08
3 left	-6.13	0.95	0.00	0.00	-0.10	0.23
3 a	-5.06	0.75	0.00	0.00	-0.08	0.18
3 b	-1.94	0.22	0.00	0.00	0.11	0.10
3 c	-0.60	0.05	0.00	0.00	0.04	0.02
3 right	0.00	0.00	0.00	0.00	0.00	0.00
4 left	-1.60	-0.03	0.00	0.00	1.21	-0.63
4 a	-1.09	0.26	0.00	0.00	1.10	-0.46
4 b	1.60	1.82	0.00	0.00	0.00	0.62
4 c	-1.09	0.26	0.00	0.00	1.10	-0.46
4 right	-1.60	-0.03	0.00	0.00	1.21	-0.63
5 top	-1.83	-3.14	0.00	0.00	8.48	-3.20
5 a	-1.81	-2.75	0.00	0.00	7.51	-2.87
5 b	-1.71	-0.89	0.00	0.00	3.54	-1.34
5 c	-1.61	0.72	0.00	0.00	1.00	-0.26
5 bottom	-1.60	0.81	0.00	0.00	1.21	-0.16
6 top	1.83	-3.14	0.00	0.00	3.69	-3.44
6 a	1.81	-2.75	0.00	0.00	3.21	-3.10
6 b	1.71	-0.89	0.00	0.00	1.16	-1.62
6 c	1.61	0.72	0.00	0.00	0.98	0.14
6 bottom	1.60	0.81	0.00	0.00	1.20	0.16

Summary of the results (Minimum)

Section	--- Deadload ----		----- P.T. ------		--- Live load ---	
	Moment	Ax.Frc	Moment	Ax.Frc	Moment	Ax.Frc
1 a	-0.60	0.05	0.00	0.00	-0.05	0.04
1 b	-1.94	0.22	0.00	0.00	-0.28	0.17
1 c	-5.06	0.75	0.00	0.00	-4.08	0.58
1 right	-6.13	0.95	0.00	0.00	-5.47	0.75
2 left	-4.30	0.98	0.00	0.00	-9.10	-0.55
2 a	-3.43	0.76	0.00	0.00	-7.18	-0.65
2 b	-0.03	-0.09	0.00	0.00	-1.60	-0.42
2 c	0.70	-0.27	0.00	0.00	0.41	-0.12
2 right	-4.30	0.98	0.00	0.00	-9.10	-0.55
3 left	-6.13	0.95	0.00	0.00	-5.47	0.75
3 a	-5.06	0.75	0.00	0.00	-4.08	0.58
3 b	-1.94	0.22	0.00	0.00	-0.28	0.17
3 c	-0.60	0.05	0.00	0.00	-0.05	0.04
3 right	0.00	0.00	0.00	0.00	0.00	0.00
4 left	-1.60	-0.03	0.00	0.00	-1.20	0.68

VEH: R5 - MICHIGAN T BRUG(5.75.44) page 40
date 11/09/2009; time 13:27:57
Cline Avenue - Load Rating - Single Box 28'-4" Wide

Summary of the results (Minimum)

Section	--- Deadload ----		----- P.T. ------		--- Live load ---	
	Moment	Ax.Frc	Moment	Ax.Frc	Moment	Ax.Frc
4 a	-1.09	0.26	0.00	0.00	-1.10	0.71
4 b	1.60	1.82	0.00	0.00	-0.12	1.98
4 c	-1.09	0.26	0.00	0.00	-1.10	0.71
4 right	-1.60	-0.03	0.00	0.00	-1.20	0.68
5 top	-1.83	-3.14	0.00	0.00	-3.69	-3.44
5 a	-1.81	-2.75	0.00	0.00	-3.21	-3.10
5 b	-1.71	-0.89	0.00	0.00	-1.16	-1.62
5 c	-1.61	0.72	0.00	0.00	-0.98	0.14
5 bottom	-1.60	0.81	0.00	0.00	-1.20	0.16
6 top	1.83	-3.14	0.00	0.00	-8.48	-3.20
6 a	1.81	-2.75	0.00	0.00	-7.51	-2.87
6 b	1.71	-0.89	0.00	0.00	-3.54	-1.34
6 c	1.61	0.72	0.00	0.00	-1.00	-0.26
6 bottom	1.60	0.81	0.00	0.00	-1.21	-0.16

VEH: S1 - SPECIAL TR BRUG(5.75.44) page 39
date 11/09/2009; time 13:27:57
Cline Avenue - Load Rating - Single Box 28'-4" Wide

Summary of the results (Maximum)

Section	--- Deadload ----		----- P.T. ------		--- Live load ---	
	Moment	Ax.Frc	Moment	Ax.Frc	Moment	Ax.Frc
1 a	-0.60	0.05	0.00	0.00	0.22	0.02
1 b	-1.94	0.22	0.00	0.00	0.75	0.10
1 c	-5.06	0.75	0.00	0.00	-0.14	0.17
1 right	-6.13	0.95	0.00	0.00	-0.19	0.22
2 left	-4.30	0.98	0.00	0.00	-3.19	0.80
2 a	-3.43	0.76	0.00	0.00	-1.52	1.02
2 b	-0.03	-0.09	0.00	0.00	3.47	0.09
2 c	0.70	-0.27	0.00	0.00	4.71	-0.90
2 right	-4.30	0.98	0.00	0.00	-3.19	0.80
3 left	-6.13	0.95	0.00	0.00	-0.19	0.22
3 a	-5.06	0.75	0.00	0.00	-0.14	0.17
3 b	-1.94	0.22	0.00	0.00	0.75	0.10
3 c	-0.60	0.05	0.00	0.00	0.22	0.02
3 right	0.00	0.00	0.00	0.00	0.00	0.00
4 left	-1.60	-0.03	0.00	0.00	1.09	-0.58
4 a	-1.09	0.26	0.00	0.00	0.99	-0.39
4 b	1.60	1.82	0.00	0.00	-0.01	0.59
4 c	-1.09	0.26	0.00	0.00	0.99	-0.39
4 right	-1.60	-0.03	0.00	0.00	1.09	-0.58
5 top	-1.83	-3.14	0.00	0.00	8.69	-5.12
5 a	-1.81	-2.75	0.00	0.00	7.40	-4.48
5 b	-1.71	-0.89	0.00	0.00	3.21	-1.89
5 c	-1.61	0.72	0.00	0.00	0.91	-0.27
5 bottom	-1.60	0.81	0.00	0.00	1.09	-0.15
6 top	1.83	-3.14	0.00	0.00	3.41	-6.16
6 a	1.81	-2.75	0.00	0.00	2.94	-5.40
6 b	1.71	-0.89	0.00	0.00	1.05	-2.41
6 c	1.61	0.72	0.00	0.00	0.88	0.12
6 bottom	1.60	0.81	0.00	0.00	1.08	0.14

Summary of the results (Minimum)

Section	--- Deadload ----		----- P.T. ------		--- Live load ---	
	Moment	Ax.Frc	Moment	Ax.Frc	Moment	Ax.Frc
1 a	-0.60	0.05	0.00	0.00	-0.08	0.04
1 b	-1.94	0.22	0.00	0.00	-0.27	0.17
1 c	-5.06	0.75	0.00	0.00	-5.31	0.78
1 right	-6.13	0.95	0.00	0.00	-7.68	1.11
2 left	-4.30	0.98	0.00	0.00	-10.51	0.80
2 a	-3.43	0.76	0.00	0.00	-8.09	0.14
2 b	-0.03	-0.09	0.00	0.00	-1.71	-0.53
2 c	0.70	-0.27	0.00	0.00	0.39	-0.12
2 right	-4.30	0.98	0.00	0.00	-10.51	0.80
3 left	-6.13	0.95	0.00	0.00	-7.68	1.11
3 a	-5.06	0.75	0.00	0.00	-5.31	0.78
3 b	-1.94	0.22	0.00	0.00	-0.27	0.17
3 c	-0.60	0.05	0.00	0.00	-0.08	0.04
3 right	0.00	0.00	0.00	0.00	0.00	0.00
4 left	-1.60	-0.03	0.00	0.00	-1.08	0.61

VEH: S1 - SPECIAL TR BRUG(5.75.44) page 40
date 11/09/2009; time 13:27:57
Cline Avenue - Load Rating - Single Box 28'-4" Wide

Summary of the results (Minimum)

Section	--- Deadload ----		----- P.T. ------		--- Live load ---	
	Moment	Ax.Frc	Moment	Ax.Frc	Moment	Ax.Frc
4 a	-1.09	0.26	0.00	0.00	-0.99	0.64
4 b	1.60	1.82	0.00	0.00	-0.11	1.87
4 c	-1.09	0.26	0.00	0.00	-0.99	0.64
4 right	-1.60	-0.03	0.00	0.00	-1.08	0.61
5 top	-1.83	-3.14	0.00	0.00	-3.41	-6.16
5 a	-1.81	-2.75	0.00	0.00	-2.94	-5.40
5 b	-1.71	-0.89	0.00	0.00	-1.05	-2.41
5 c	-1.61	0.72	0.00	0.00	-0.88	0.12
5 bottom	-1.60	0.81	0.00	0.00	-1.08	0.14
6 top	1.83	-3.14	0.00	0.00	-8.69	-5.12
6 a	1.81	-2.75	0.00	0.00	-7.40	-4.48
6 b	1.71	-0.89	0.00	0.00	-3.21	-1.89
6 c	1.61	0.72	0.00	0.00	-0.91	-0.27
6 bottom	1.60	0.81	0.00	0.00	-1.09	-0.15

VEH: S2 - SPECIAL TR BRUG(5.75.44) page 39
date 11/09/2009; time 13:27:58
Cline Avenue - Load Rating - Single Box 28'-4" Wide

Summary of the results (Maximum)

Section	Deadload Moment	Deadload Ax.Frc	P.T. Moment	P.T. Ax.Frc	Live load Moment	Live load Ax.Frc
1 a	-0.60	0.05	0.00	0.00	0.16	0.02
1 b	-1.94	0.22	0.00	0.00	0.63	0.10
1 c	-5.06	0.75	0.00	0.00	-0.13	0.15
1 right	-6.13	0.95	0.00	0.00	-0.17	0.20
2 left	-4.30	0.98	0.00	0.00	-2.73	0.74
2 a	-3.43	0.76	0.00	0.00	-1.24	0.96
2 b	-0.03	-0.09	0.00	0.00	3.21	0.09
2 c	0.70	-0.27	0.00	0.00	4.43	-0.89
2 right	-4.30	0.98	0.00	0.00	-2.73	0.74
3 left	-6.13	0.95	0.00	0.00	-0.17	0.20
3 a	-5.06	0.75	0.00	0.00	-0.13	0.15
3 b	-1.94	0.22	0.00	0.00	0.63	0.10
3 c	-0.60	0.05	0.00	0.00	0.16	0.02
3 right	0.00	0.00	0.00	0.00	0.00	0.00
4 left	-1.60	-0.03	0.00	0.00	1.03	-0.55
4 a	-1.09	0.26	0.00	0.00	0.94	-0.37
4 b	1.60	1.82	0.00	0.00	-0.01	0.61
4 c	-1.09	0.26	0.00	0.00	0.94	-0.37
4 right	-1.60	-0.03	0.00	0.00	1.03	-0.55
5 top	-1.83	-3.14	0.00	0.00	8.34	-4.49
5 a	-1.81	-2.75	0.00	0.00	7.16	-3.89
5 b	-1.71	-0.89	0.00	0.00	3.21	-1.62
5 c	-1.61	0.72	0.00	0.00	0.86	-0.25
5 bottom	-1.60	0.81	0.00	0.00	1.03	-0.14
6 top	1.83	-3.14	0.00	0.00	3.22	-5.30
6 a	1.81	-2.75	0.00	0.00	2.78	-4.59
6 b	1.71	-0.89	0.00	0.00	1.00	-2.02
6 c	1.61	0.72	0.00	0.00	0.83	0.12
6 bottom	1.60	0.81	0.00	0.00	1.02	0.13

Summary of the results (Minimum)

Section	Deadload Moment	Deadload Ax.Frc	P.T. Moment	P.T. Ax.Frc	Live load Moment	Live load Ax.Frc
1 a	-0.60	0.05	0.00	0.00	-0.08	0.04
1 b	-1.94	0.22	0.00	0.00	-0.25	0.15
1 c	-5.06	0.75	0.00	0.00	-4.77	0.71
1 right	-6.13	0.95	0.00	0.00	-6.79	1.00
2 left	-4.30	0.98	0.00	0.00	-9.62	-0.39
2 a	-3.43	0.76	0.00	0.00	-7.46	0.09
2 b	-0.03	-0.09	0.00	0.00	-1.53	-0.53
2 c	0.70	-0.27	0.00	0.00	0.39	-0.11
2 right	-4.30	0.98	0.00	0.00	-9.62	-0.39
3 left	-6.13	0.95	0.00	0.00	-6.79	1.00
3 a	-5.06	0.75	0.00	0.00	-4.77	0.71
3 b	-1.94	0.22	0.00	0.00	-0.25	0.15
3 c	-0.60	0.05	0.00	0.00	-0.08	0.04
3 right	0.00	0.00	0.00	0.00	0.00	0.00
4 left	-1.60	-0.03	0.00	0.00	-1.02	0.59

VEH: S2 - SPECIAL TR BRUG(5.75.44) page 40
date 11/09/2009; time 13:27:58
Cline Avenue - Load Rating - Single Box 28'-4" Wide

Summary of the results (Minimum)

Section	Deadload Moment	Deadload Ax.Frc	P.T. Moment	P.T. Ax.Frc	Live load Moment	Live load Ax.Frc
4 a	-1.09	0.26	0.00	0.00	-0.94	0.62
4 b	1.60	1.82	0.00	0.00	-0.11	1.90
4 c	-1.09	0.26	0.00	0.00	-0.94	0.62
4 right	-1.60	-0.03	0.00	0.00	-1.02	0.59
5 top	-1.83	-3.14	0.00	0.00	-3.21	-5.30
5 a	-1.81	-2.75	0.00	0.00	-2.78	-4.59
5 b	-1.71	-0.89	0.00	0.00	-1.00	-2.02
5 c	-1.61	0.72	0.00	0.00	-0.83	0.12
5 bottom	-1.60	0.81	0.00	0.00	-1.02	0.13
6 top	1.83	-3.14	0.00	0.00	-8.34	-4.49
6 a	1.81	-2.75	0.00	0.00	-7.16	-3.89
6 b	1.71	-0.89	0.00	0.00	-3.21	-1.62
6 c	1.61	0.72	0.00	0.00	-0.86	-0.25
6 bottom	1.60	0.81	0.00	0.00	-1.03	-0.14

VEH: S3 - SPECIAL TR BRUG(5.75.44) page 39
date 11/09/2009; time 13:27:58
Cline Avenue - Load Rating - Single Box 28'-4" Wide

Summary of the results (Maximum)

Section	--- Deadload ----		----- P.T. ------		--- Live load ---	
	Moment	Ax.Frc	Moment	Ax.Frc	Moment	Ax.Frc
1 a	-0.60	0.05	0.00	0.00	0.14	0.03
1 b	-1.94	0.22	0.00	0.00	0.59	0.14
1 c	-5.06	0.75	0.00	0.00	-0.14	0.18
1 right	-6.13	0.95	0.00	0.00	-0.18	0.24
2 left	-4.30	0.98	0.00	0.00	-3.15	1.47
2 a	-3.43	0.76	0.00	0.00	-1.44	1.19
2 b	-0.03	-0.09	0.00	0.00	3.83	0.12
2 c	0.70	-0.27	0.00	0.00	5.37	-1.18
2 right	-4.30	0.98	0.00	0.00	-3.15	1.47
3 left	-6.13	0.95	0.00	0.00	-0.18	0.24
3 a	-5.06	0.75	0.00	0.00	-0.14	0.18
3 b	-1.94	0.22	0.00	0.00	0.59	0.14
3 c	-0.60	0.05	0.00	0.00	0.14	0.03
3 right	0.00	0.00	0.00	0.00	0.00	0.00
4 left	-1.60	-0.03	0.00	0.00	1.29	-0.69
4 a	-1.09	0.26	0.00	0.00	1.18	-0.47
4 b	1.60	1.82	0.00	0.00	-0.01	0.80
4 c	-1.09	0.26	0.00	0.00	1.18	-0.47
4 right	-1.60	-0.03	0.00	0.00	1.29	-0.69
5 top	-1.83	-3.14	0.00	0.00	10.60	-5.12
5 a	-1.81	-2.75	0.00	0.00	9.18	-4.45
5 b	-1.71	-0.89	0.00	0.00	4.24	-1.90
5 c	-1.61	0.72	0.00	0.00	1.07	-0.31
5 bottom	-1.60	0.81	0.00	0.00	1.29	-0.18
6 top	1.83	-3.14	0.00	0.00	4.03	-5.96
6 a	1.81	-2.75	0.00	0.00	3.49	-5.19
6 b	1.71	-0.89	0.00	0.00	1.26	-2.34
6 c	1.61	0.72	0.00	0.00	1.05	0.15
6 bottom	1.60	0.81	0.00	0.00	1.29	0.17

Summary of the results (Minimum)

Section	--- Deadload ----		----- P.T. ------		--- Live load ---	
	Moment	Ax.Frc	Moment	Ax.Frc	Moment	Ax.Frc
1 a	-0.60	0.05	0.00	0.00	-0.09	0.05
1 b	-1.94	0.22	0.00	0.00	-0.28	0.18
1 c	-5.06	0.75	0.00	0.00	-5.74	0.85
1 right	-6.13	0.95	0.00	0.00	-8.01	1.18
2 left	-4.30	0.98	0.00	0.00	-11.88	-0.57
2 a	-3.43	0.76	0.00	0.00	-9.21	0.04
2 b	-0.03	-0.09	0.00	0.00	-1.84	-0.70
2 c	0.70	-0.27	0.00	0.00	0.50	-0.14
2 right	-4.30	0.98	0.00	0.00	-11.88	-0.57
3 left	-6.13	0.95	0.00	0.00	-8.01	1.18
3 a	-5.06	0.75	0.00	0.00	-5.74	0.85
3 b	-1.94	0.22	0.00	0.00	-0.28	0.19
3 c	-0.60	0.05	0.00	0.00	-0.09	0.05
3 right	0.00	0.00	0.00	0.00	0.00	0.00
4 left	-1.60	-0.03	0.00	0.00	-1.29	0.75

VEH: S3 - SPECIAL TR BRUG(5.75.44) page 40
date 11/09/2009; time 13:27:58
Cline Avenue - Load Rating - Single Box 28'-4" Wide

Summary of the results (Minimum)

Section	--- Deadload ----		----- P.T. ------		--- Live load ---	
	Moment	Ax.Frc	Moment	Ax.Frc	Moment	Ax.Frc
4 a	-1.09	0.26	0.00	0.00	-1.18	0.79
4 b	1.60	1.82	0.00	0.00	-0.14	2.53
4 c	-1.09	0.26	0.00	0.00	-1.18	0.79
4 right	-1.60	-0.03	0.00	0.00	-1.29	0.75
5 top	-1.83	-3.14	0.00	0.00	-4.03	-5.96
5 a	-1.81	-2.75	0.00	0.00	-3.49	-5.19
5 b	-1.71	-0.89	0.00	0.00	-1.26	-2.34
5 c	-1.61	0.72	0.00	0.00	-1.05	0.15
5 bottom	-1.60	0.81	0.00	0.00	-1.29	0.17
6 top	1.83	-3.14	0.00	0.00	-10.60	-5.12
6 a	1.81	-2.75	0.00	0.00	-9.18	-4.45
6 b	1.71	-0.89	0.00	0.00	-4.24	-1.90
6 c	1.61	0.72	0.00	0.00	-1.07	-0.31
6 bottom	1.60	0.81	0.00	0.00	-1.29	-0.18

VEH: S4 - SUPER LOAD BRUG(5.75.44) page 39
date 11/09/2009; time 13:27:59
Cline Avenue - Load Rating - Single Box 28'-4" Wide

Summary of the results (Maximum)

Section	Deadload Moment	Deadload Ax.Frc	P.T. Moment	P.T. Ax.Frc	Live load Moment	Live load Ax.Frc
1 a	-0.60	0.05	0.00	0.00	0.13	0.02
1 b	-1.94	0.22	0.00	0.00	0.51	0.08
1 c	-5.06	0.75	0.00	0.00	-0.08	0.13
1 right	-6.13	0.95	0.00	0.00	-0.11	0.17
2 left	-4.30	0.98	0.00	0.00	-2.06	0.59
2 a	-3.43	0.76	0.00	0.00	-0.84	0.79
2 b	-0.03	-0.09	0.00	0.00	2.66	0.08
2 c	0.70	-0.27	0.00	0.00	3.57	-0.75
2 right	-4.30	0.98	0.00	0.00	-2.06	0.59
3 left	-6.13	0.95	0.00	0.00	-0.11	0.17
3 a	-5.06	0.75	0.00	0.00	-0.08	0.13
3 b	-1.94	0.22	0.00	0.00	0.51	0.08
3 c	-0.60	0.05	0.00	0.00	0.13	0.02
3 right	0.00	0.00	0.00	0.00	0.00	0.00
4 left	-1.60	-0.03	0.00	0.00	0.90	-0.48
4 a	-1.09	0.26	0.00	0.00	0.82	-0.33
4 b	1.60	1.82	0.00	0.00	0.00	0.49
4 c	-1.09	0.26	0.00	0.00	0.82	-0.33
4 right	-1.60	-0.03	0.00	0.00	0.90	-0.48
5 top	-1.83	-3.14	0.00	0.00	6.89	-3.64
5 a	-1.81	-2.75	0.00	0.00	5.93	-3.16
5 b	-1.71	-0.89	0.00	0.00	2.69	-1.32
5 c	-1.61	0.72	0.00	0.00	0.75	-0.21
5 bottom	-1.60	0.81	0.00	0.00	0.90	-0.12
6 top	1.83	-3.14	0.00	0.00	2.79	-4.32
6 a	1.81	-2.75	0.00	0.00	2.41	-3.76
6 b	1.71	-0.89	0.00	0.00	0.86	-1.67
6 c	1.61	0.72	0.00	0.00	0.73	0.10
6 bottom	1.60	0.81	0.00	0.00	0.89	0.12

Summary of the results (Minimum)

Section	Deadload Moment	Deadload Ax.Frc	P.T. Moment	P.T. Ax.Frc	Live load Moment	Live load Ax.Frc
1 a	-0.60	0.05	0.00	0.00	-0.05	0.03
1 b	-1.94	0.22	0.00	0.00	-0.16	0.12
1 c	-5.06	0.75	0.00	0.00	-3.77	0.56
1 right	-6.13	0.95	0.00	0.00	-5.41	0.79
2 left	-4.30	0.98	0.00	0.00	-7.83	-0.35
2 a	-3.43	0.76	0.00	0.00	-5.94	0.05
2 b	-0.03	-0.09	0.00	0.00	-1.30	-0.45
2 c	0.70	-0.27	0.00	0.00	0.30	-0.09
2 right	-4.30	0.98	0.00	0.00	-7.82	-0.35
3 left	-6.13	0.95	0.00	0.00	-5.41	0.79
3 a	-5.06	0.75	0.00	0.00	-3.77	0.56
3 b	-1.94	0.22	0.00	0.00	-0.16	0.12
3 c	-0.60	0.05	0.00	0.00	-0.05	0.03
3 right	0.00	0.00	0.00	0.00	0.00	0.00
4 left	-1.60	-0.03	0.00	0.00	-0.89	0.51

VEH: S4 - SUPER LOAD BRUG(5.75.44) page 40
date 11/09/2009; time 13:27:59
Cline Avenue - Load Rating - Single Box 28'-4" Wide

Summary of the results (Minimum)

Section	Deadload Moment	Deadload Ax.Frc	P.T. Moment	P.T. Ax.Frc	Live load Moment	Live load Ax.Frc
4 a	-1.09	0.26	0.00	0.00	-0.82	0.53
4 b	1.60	1.82	0.00	0.00	-0.09	1.54
4 c	-1.09	0.26	0.00	0.00	-0.82	0.53
4 right	-1.60	-0.03	0.00	0.00	-0.89	0.51
5 top	-1.83	-3.14	0.00	0.00	-2.79	-4.32
5 a	-1.81	-2.75	0.00	0.00	-2.41	-3.76
5 b	-1.71	-0.89	0.00	0.00	-0.86	-1.67
5 c	-1.61	0.72	0.00	0.00	-0.73	0.10
5 bottom	-1.60	0.81	0.00	0.00	-0.89	0.12
6 top	1.83	-3.14	0.00	0.00	-6.89	-3.64
6 a	1.81	-2.75	0.00	0.00	-5.93	-3.16
6 b	1.71	-0.89	0.00	0.00	-2.69	-1.32
6 c	1.61	0.72	0.00	0.00	-0.75	-0.21
6 bottom	1.60	0.81	0.00	0.00	-0.90	-0.12

VEH: S5 - SUPERLOAD BRUG(5.75.44) page 39
date 11/09/2009; time 13:27:59
Cline Avenue - Load Rating - Single Box 28'-4" Wide

Summary of the results (Maximum)

Section	Deadload Moment	Deadload Ax.Frc	P.T. Moment	P.T. Ax.Frc	Live load Moment	Live load Ax.Frc
1 a	-0.60	0.05	0.00	0.00	0.24	0.02
1 b	-1.94	0.22	0.00	0.00	1.01	0.12
1 c	-5.06	0.75	0.00	0.00	-0.16	0.11
1 right	-6.13	0.95	0.00	0.00	-0.21	0.14
2 left	-4.30	0.98	0.00	0.00	-2.92	-0.31
2 a	-3.43	0.76	0.00	0.00	-2.24	0.94
2 b	-0.03	-0.09	0.00	0.00	3.28	0.06
2 c	0.70	-0.27	0.00	0.00	4.93	-0.81
2 right	-4.30	0.98	0.00	0.00	-2.92	-0.31
3 left	-6.13	0.95	0.00	0.00	-0.21	0.14
3 a	-5.06	0.75	0.00	0.00	-0.16	0.11
3 b	-1.94	0.22	0.00	0.00	1.01	0.12
3 c	-0.60	0.05	0.00	0.00	0.24	0.02
3 right	0.00	0.00	0.00	0.00	0.00	0.00
4 left	-1.60	-0.03	0.00	0.00	0.73	-0.41
4 a	-1.09	0.26	0.00	0.00	0.66	-0.22
4 b	1.60	1.82	0.00	0.00	0.00	0.60
4 c	-1.09	0.26	0.00	0.00	0.66	-0.22
4 right	-1.60	-0.03	0.00	0.00	0.73	-0.41
5 top	-1.83	-3.14	0.00	0.00	7.80	-5.37
5 a	-1.81	-2.75	0.00	0.00	6.49	-4.57
5 b	-1.71	-0.89	0.00	0.00	2.79	-1.81
5 c	-1.61	0.72	0.00	0.00	0.60	-0.22
5 bottom	-1.60	0.81	0.00	0.00	0.73	-0.11
6 top	1.83	-3.14	0.00	0.00	2.38	-6.69
6 a	1.81	-2.75	0.00	0.00	2.04	-5.71
6 b	1.71	-0.89	0.00	0.00	0.72	-2.31
6 c	1.61	0.72	0.00	0.00	0.58	0.08
6 bottom	1.60	0.81	0.00	0.00	0.72	0.10

Summary of the results (Minimum)

Section	Deadload Moment	Deadload Ax.Frc	P.T. Moment	P.T. Ax.Frc	Live load Moment	Live load Ax.Frc
1 a	-0.60	0.05	0.00	0.00	-0.11	0.04
1 b	-1.94	0.22	0.00	0.00	-0.35	0.15
1 c	-5.06	0.75	0.00	0.00	-5.28	0.82
1 right	-6.13	0.95	0.00	0.00	-7.76	1.19
2 left	-4.30	0.98	0.00	0.00	-10.79	0.84
2 a	-3.43	0.76	0.00	0.00	-8.05	0.20
2 b	-0.03	-0.09	0.00	0.00	-1.35	-0.45
2 c	0.70	-0.27	0.00	0.00	0.36	-0.10
2 right	-4.30	0.98	0.00	0.00	-10.79	0.84
3 left	-6.13	0.95	0.00	0.00	-7.76	1.19
3 a	-5.06	0.75	0.00	0.00	-5.28	0.82
3 b	-1.94	0.22	0.00	0.00	-0.35	0.15
3 c	-0.60	0.05	0.00	0.00	-0.11	0.04
3 right	0.00	0.00	0.00	0.00	0.00	0.00
4 left	-1.60	-0.03	0.00	0.00	-0.72	0.44

VEH: S5 - SUPERLOAD BRUG(5.75.44) page 40
date 11/09/2009; time 13:27:59
Cline Avenue - Load Rating - Single Box 28'-4" Wide

Summary of the results (Minimum)

Section	Deadload Moment	Deadload Ax.Frc	P.T. Moment	P.T. Ax.Frc	Live load Moment	Live load Ax.Frc
4 a	-1.09	0.26	0.00	0.00	-0.66	0.47
4 b	1.60	1.82	0.00	0.00	-0.09	1.84
4 c	-1.09	0.26	0.00	0.00	-0.66	0.47
4 right	-1.60	-0.03	0.00	0.00	-0.72	0.44
5 top	-1.83	-3.14	0.00	0.00	-2.38	-6.69
5 a	-1.81	-2.75	0.00	0.00	-2.04	-5.71
5 b	-1.71	-0.89	0.00	0.00	-0.72	-2.31
5 c	-1.61	0.72	0.00	0.00	-0.58	0.08
5 bottom	-1.60	0.81	0.00	0.00	-0.72	0.10
6 top	1.83	-3.14	0.00	0.00	-7.80	-5.37
6 a	1.81	-2.75	0.00	0.00	-6.49	-4.57
6 b	1.71	-0.89	0.00	0.00	-2.79	-1.81
6 c	1.61	0.72	0.00	0.00	-0.60	-0.22
6 bottom	1.60	0.81	0.00	0.00	-0.73	-0.11

4.9.4 Brug Input Striped Lanes

1V_A_SL_HL93_truck_EL.txt 9/11/2009

```
* start ; column 11-30 can be used to have your own text on the top of each page
*   5   10   15   20   25   30   35   40   45   50   55   60   65   70   75   80
*   V    V    V    V    V    V    V    V    V    V    V    V    V    V    V    V
00001  1 1     VEH: HL93- TRUCK - SINGLE TRUCK
* code 1001
Cline Avenue - Striped Lanes - Single Box 28'-4" Wide
* code 1002
    2         1
* code 1003
*   5   10   15   20   25   30   35   40   45   50   55   60   65   70   75   80
*   V    V    V    V    V    V    V    V    V    V    V    V    V    V    V    V
250.0      122.0      28.33    1.0       1.0       1.3
* code 1004
    1    0    2
* code 1005
   72    1
* code 1005a
* location traffic lanes
10.167
* maximum and minimum truck
7.917     16.417    0.000
* code 1007, linear loads
0.7350    0.441
27.5983   0.441
* code 1201
    6    5    3    1    2
* code 1202 coordinates
 0.0000   8.2500
 6.3125   8.2500
 6.3125   0.3333
22.0208   8.2500
22.0208   0.3333
28.3333   8.2500
* code 1203 - profile 1
    5    2    3    4
0.000     0.750
1.667     0.971
3.236     1.178
5.667     1.500
6.313     1.500
* code 1203 - profile 2
    7    2    3    4
0.000     1.500
0.646     1.500
4.646     0.750
7.854     0.750
11.063    0.750
15.063    1.500
15.708    1.500
* code 1203 - profile 3
    5    2    3    4
0.000     1.500
0.646     1.500
3.076     1.178
4.646     0.971
6.313     0.750
* code 1203 - profile 4
    5    2    3    4
0.000     0.667
0.646     0.667
7.854     0.667
15.063    0.667
15.708    0.667
* code 1203 - profile 5
    5    2    3    4
0.000     1.292
0.750     1.292
4.042     1.292
7.583     1.292
7.917     1.292
* code 1204 - assembling boxgirder
    1    2    1
    2    4    2
    4    6    3
    3    5    4
    2    3    5
    4    5    5
* code 1205 control code
    1    2   13    1    1    0    4    3     1.0       1.0
* code 1206 wheels/axle
       0.0
```

```
       1.5
       6.0
       7.5 0.833
* code 1207 definition axles
0.0       0.1
14.0      0.4
28.0      0.4
* code 1208 - accuracy
0.00001   0.00001   0.00001   .00001    .00001
* code 1209 number sections
   29
* code definition sections
   1A   1B   1C   1R   2L   2A   2B   2C   2R   3L   3A   3B   3C   3R   4L   4A
   4B   4C   4R   5L   5A   5B   5C   5R   6L   6A   6B   6C   6R
* code 1210 - density conrete
0.156
* code 1211 - extra forces selfweight

* code 1212 - surcharge
0.7083
* code 1213 - Prestressing Layout - NONE
```

1V_A_SL_HL93_tandem_EL.txt 9/11/2009

```
* start ; column 11-30 can be used to have your own text on the top of each page
*   5   10   15   20   25   30   35   40   45   50   55   60   65   70   75   80
*   V    V    V    V    V    V    V    V    V    V    V    V    V    V    V    V
00001  1 1     VEH: HL93- TANDEM - SINGLE TRUCK
* code 1001
Cline Avenue - Striped Lanes - Single Box 28'-4" Wide
* code 1002
    2         1
* code 1003
*   5   10   15   20   25   30   35   40   45   50   55   60   65   70   75   80
*   V    V    V    V    V    V    V    V    V    V    V    V    V    V    V    V
250.0      122.0      28.33    1.0       1.0       1.3
* code 1004
    1    0    2
* code 1005
   50    1
* code 1005a
* location traffic lanes
10.167
* maximum and minimum truck
7.917     16.417    0.000
* code 1007, linear loads
0.7350    0.441
27.5983   0.441
* code 1201
    6    5    3    1    2
* code 1202 coordinates
 0.0000   8.2500
 6.3125   8.2500
 6.3125   0.3333
22.0208   8.2500
22.0208   0.3333
28.3333   8.2500
* code 1203 - profile 1
    5    2    3    4
0.000     0.750
1.667     0.971
3.236     1.178
5.667     1.500
6.313     1.500
* code 1203 - profile 2
    7    2    3    4
0.000     1.500
0.646     1.500
4.646     0.750
7.854     0.750
11.063    0.750
15.063    1.500
15.708    1.500
* code 1203 - profile 3
    5    2    3    4
0.000     1.500
0.646     1.500
3.076     1.178
4.646     0.971
6.313     0.750
* code 1203 - profile 4
    5    2    3    4
0.000     0.667
0.646     0.667
7.854     0.667
15.063    0.667
15.708    0.667
* code 1203 - profile 5
    5    2    3    4
0.000     1.292
0.750     1.292
4.042     1.292
7.583     1.292
7.917     1.292
* code 1204 - assembling boxgirder
    1    2    1
    2    4    2
    4    6    3
    3    5    4
    2    3    5
    4    5    5
* code 1205 control code
    1    2   13    1    1    0    4    2     1.0       1.0
* code 1206 wheels/axle
       0.0
```

1V_A_SL_HL93_tandem_EL.txt 9/11/2009

```
       1.5
       6.0
       7.5 0.833
* code 1207 definition axles
0.0       0.5
4.0       0.5
* code 1208 - accuracy
0.00001   0.00001   0.00001   .00001    .00001
* code 1209 number sections
   29
* code definition sections
   1A   1B   1C   1R   2L   2A   2B   2C   2R   3L   3A   3B   3C   3R   4L   4A
   4B   4C   4R   5L   5A   5B   5C   5R   6L   6A   6B   6C   6R
* code 1210 - density conrete
0.156
* code 1211 - extra forces selfweight

* code 1212 - surcharge
0.7083
* code 1213 - Prestressing Layout - NONE
```

4.9.5 Brug Output Striped Lanes (Summary)

VEH: HL93- TRUCK - S BRUG(5.75.44) page 39
date 11/09/2009; time 14:44:03
Cline Avenue - Striped Lanes - Single Box 28'-4" Wide

Summary of the results (Maximum)

Section	Deadload Moment	Deadload Ax.Frc	P.T. Moment	P.T. Ax.Frc	Live load Moment	Live load Ax.Frc
1 a	-0.60	0.05	0.00	0.00	0.04	0.01
1 b	-1.94	0.22	0.00	0.00	0.58	0.07
1 c	-5.06	0.75	0.00	0.00	-0.10	0.57
1 right	-6.13	0.95	0.00	0.00	-0.93	0.97
2 left	-4.30	0.98	0.00	0.00	-3.42	0.89
2 a	-3.43	0.76	0.00	0.00	-1.97	0.35
2 b	-0.03	-0.09	0.00	0.00	3.43	-0.06
2 c	0.70	-0.27	0.00	0.00	4.27	-0.60
2 right	-4.30	0.98	0.00	0.00	-3.64	-0.37
3 left	-6.13	0.95	0.00	0.00	-0.26	0.17
3 a	-5.06	0.75	0.00	0.00	-0.18	0.13
3 b	-1.94	0.22	0.00	0.00	-0.04	0.04
3 c	-0.60	0.05	0.00	0.00	-0.01	0.01
3 right	0.00	0.00	0.00	0.00	0.00	0.00
4 left	-1.60	-0.03	0.00	0.00	0.68	-0.17
4 a	-1.09	0.26	0.00	0.00	0.62	-0.01
4 b	1.60	1.82	0.00	0.00	-0.03	0.65
4 c	-1.09	0.26	0.00	0.00	0.17	0.58
4 right	-1.60	-0.03	0.00	0.00	0.19	0.47
5 top	-1.83	-3.14	0.00	0.00	5.22	-1.96
5 a	-1.81	-2.75	0.00	0.00	4.45	-1.73
5 b	-1.71	-0.89	0.00	0.00	1.98	-0.72
5 c	-1.61	0.72	0.00	0.00	0.62	-0.21
5 bottom	-1.60	0.81	0.00	0.00	0.68	-0.10
6 top	1.83	-3.14	0.00	0.00	-3.38	-0.70
6 a	1.81	-2.75	0.00	0.00	-2.93	-0.62
6 b	1.71	-0.89	0.00	0.00	-1.18	-0.25
6 c	1.61	0.72	0.00	0.00	0.57	0.07
6 bottom	1.60	0.81	0.00	0.00	0.73	0.09

Summary of the results (Minimum)

Section	Deadload Moment	Deadload Ax.Frc	P.T. Moment	P.T. Ax.Frc	Live load Moment	Live load Ax.Frc
1 a	-0.60	0.05	0.00	0.00	-0.06	0.02
1 b	-1.94	0.22	0.00	0.00	-0.20	0.10
1 c	-5.06	0.75	0.00	0.00	-1.19	0.50
1 right	-6.13	0.95	0.00	0.00	-4.63	0.85
2 left	-4.30	0.98	0.00	0.00	-7.06	-0.17
2 a	-3.43	0.76	0.00	0.00	-5.95	-0.43
2 b	-0.03	-0.09	0.00	0.00	-0.64	-0.62
2 c	0.70	-0.27	0.00	0.00	0.94	-0.25
2 right	-4.30	0.98	0.00	0.00	-7.06	-0.17
3 left	-6.13	0.95	0.00	0.00	-1.60	0.66
3 a	-5.06	0.75	0.00	0.00	-1.04	0.45
3 b	-1.94	0.22	0.00	0.00	-0.20	0.10
3 c	-0.60	0.05	0.00	0.00	-0.06	0.02
3 right	0.00	0.00	0.00	0.00	0.00	0.00
4 left	-1.60	-0.03	0.00	0.00	-0.38	0.66

VEH: HL93- TRUCK - S BRUG(5.75.44) page 40
date 11/09/2009; time 14:44:03
Cline Avenue - Striped Lanes - Single Box 28'-4" Wide

Summary of the results (Minimum)

Section	Deadload Moment	Deadload Ax.Frc	P.T. Moment	P.T. Ax.Frc	Live load Moment	Live load Ax.Frc
4 a	-1.09	0.26	0.00	0.00	-0.35	0.73
4 b	1.60	1.82	0.00	0.00	-0.08	1.00
4 c	-1.09	0.26	0.00	0.00	-0.67	0.56
4 right	-1.60	-0.03	0.00	0.00	-0.73	0.52
5 top	-1.83	-3.14	0.00	0.00	-0.56	-7.77
5 a	-1.81	-2.75	0.00	0.00	-0.37	-6.53
5 b	-1.71	-0.89	0.00	0.00	0.07	-2.37
5 c	-1.61	0.72	0.00	0.00	-0.19	0.00
5 bottom	-1.60	0.81	0.00	0.00	-0.38	0.04
6 top	1.83	-3.14	0.00	0.00	-5.22	-1.96
6 a	1.81	-2.75	0.00	0.00	-4.45	-1.73
6 b	1.71	-0.89	0.00	0.00	-1.98	-0.72
6 c	1.61	0.72	0.00	0.00	-0.32	-0.12
6 bottom	1.60	0.81	0.00	0.00	-0.19	-0.04

VEH: HL93- TANDEM - BRUG(5.75.44) page 39
date 11/09/2009; time 14:44:03
Cline Avenue - Striped Lanes - Single Box 28'-4" Wide

Summary of the results (Maximum)

Section	Deadload Moment	Deadload Ax.Frc	P.T. Moment	P.T. Ax.Frc	Live load Moment	Live load Ax.Frc
1 a	-0.60	0.05	0.00	0.00	0.03	0.03
1 b	-1.94	0.22	0.00	0.00	0.26	0.14
1 c	-5.06	0.75	0.00	0.00	-0.72	0.63
1 right	-6.13	0.95	0.00	0.00	-1.44	0.90
2 left	-4.30	0.98	0.00	0.00	-4.54	0.77
2 a	-3.43	0.76	0.00	0.00	-3.11	0.36
2 b	-0.03	-0.09	0.00	0.00	2.89	-0.06
2 c	0.70	-0.27	0.00	0.00	3.94	-0.61
2 right	-4.30	0.98	0.00	0.00	-3.47	-0.33
3 left	-6.13	0.95	0.00	0.00	-0.44	0.15
3 a	-5.06	0.75	0.00	0.00	-0.32	0.11
3 b	-1.94	0.22	0.00	0.00	-0.09	0.03
3 c	-0.60	0.05	0.00	0.00	-0.03	0.01
3 right	0.00	0.00	0.00	0.00	0.00	0.00
4 left	-1.60	-0.03	0.00	0.00	0.51	-0.07
4 a	-1.09	0.26	0.00	0.00	0.46	0.11
4 b	1.60	1.82	0.00	0.00	-0.03	0.75
4 c	-1.09	0.26	0.00	0.00	0.08	0.70
4 right	-1.60	-0.03	0.00	0.00	0.09	0.57
5 top	-1.83	-3.14	0.00	0.00	5.92	-2.92
5 a	-1.81	-2.75	0.00	0.00	4.54	-1.89
5 b	-1.71	-0.89	0.00	0.00	1.94	-0.86
5 c	-1.61	0.72	0.00	0.00	0.48	-0.20
5 bottom	-1.60	0.81	0.00	0.00	0.51	-0.08
6 top	1.83	-3.14	0.00	0.00	-3.03	-0.74
6 a	1.81	-2.75	0.00	0.00	-2.60	-0.66
6 b	1.71	-0.89	0.00	0.00	-1.03	-0.29
6 c	1.61	0.72	0.00	0.00	0.43	0.05
6 bottom	1.60	0.81	0.00	0.00	0.57	0.07

Summary of the results (Minimum)

Section	Deadload Moment	Deadload Ax.Frc	P.T. Moment	P.T. Ax.Frc	Live load Moment	Live load Ax.Frc
1 a	-0.60	0.05	0.00	0.00	-0.11	0.03
1 b	-1.94	0.22	0.00	0.00	-0.37	0.13
1 c	-5.06	0.75	0.00	0.00	-1.94	0.61
1 right	-6.13	0.95	0.00	0.00	-4.65	0.87
2 left	-4.30	0.98	0.00	0.00	-7.89	-0.14
2 a	-3.43	0.76	0.00	0.00	-5.94	-0.44
2 b	-0.03	-0.09	0.00	0.00	-0.50	-0.61
2 c	0.70	-0.27	0.00	0.00	1.02	-0.26
2 right	-4.30	0.98	0.00	0.00	-7.89	-0.14
3 left	-6.13	0.95	0.00	0.00	-2.03	0.66
3 a	-5.06	0.75	0.00	0.00	-1.46	0.49
3 b	-1.94	0.22	0.00	0.00	-0.37	0.13
3 c	-0.60	0.05	0.00	0.00	-0.11	0.03
3 right	0.00	0.00	0.00	0.00	0.00	0.00
4 left	-1.60	-0.03	0.00	0.00	-0.33	0.68

VEH: HL93- TANDEM - BRUG(5.75.44) page 40
date 11/09/2009; time 14:44:03
Cline Avenue - Striped Lanes - Single Box 28'-4" Wide

Summary of the results (Minimum)

Section	Deadload Moment	Deadload Ax.Frc	P.T. Moment	P.T. Ax.Frc	Live load Moment	Live load Ax.Frc
4 a	-1.09	0.26	0.00	0.00	-0.30	0.76
4 b	1.60	1.82	0.00	0.00	-0.07	1.12
4 c	-1.09	0.26	0.00	0.00	-0.52	0.50
4 right	-1.60	-0.03	0.00	0.00	-0.57	0.46
5 top	-1.83	-3.14	0.00	0.00	0.24	-6.45
5 a	-1.81	-2.75	0.00	0.00	0.24	-5.63
5 b	-1.71	-0.89	0.00	0.00	0.24	-2.43
5 c	-1.61	0.72	0.00	0.00	-0.14	-0.02
5 bottom	-1.60	0.81	0.00	0.00	-0.33	0.03
6 top	1.83	-3.14	0.00	0.00	-5.92	-2.92
6 a	1.81	-2.75	0.00	0.00	-4.54	-1.89
6 b	1.71	-0.89	0.00	0.00	-1.94	-0.86
6 c	1.61	0.72	0.00	0.00	-0.23	-0.11
6 bottom	1.60	0.81	0.00	0.00	-0.09	-0.03

4.10 3D Analysis Section VB

URS

Page 4.10/1 of ____

Job CLINE AVENUE LOAD RATING Project No. ____ Sheet ____ of ____

Description TRANSVERSE ANALYSIS Computed by PT Date 1/12/08

Checked by [signature] Date 1/16/09

Reference

CASE IB SINGLE BOX - 41' - RAMP A

Maximum Width @ Sta 8+00, = 41.134' ≈

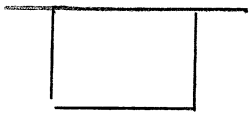

4.10.1 Brug Model

BRUG SECTIONS

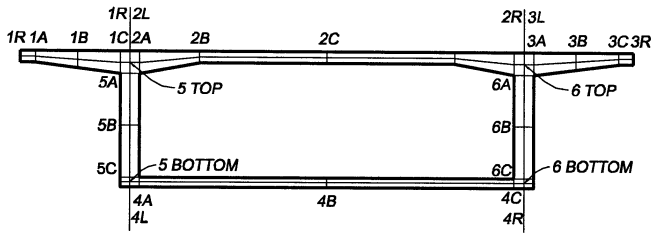

VDeen
01/16/09

4.10.1

HALF SIZE PRINT - 11x17	Designed by		URS Corporation Southern 7650 Corporate Center Drive Suite 400 Miami, FL 33126-1220 Tel: (305) 262-7488 C.A. No. EB 00000002	TYPICAL SECTION - Transverse Analysis		SECTION VB
No. Date Rev. Remarks	Drawn by R.V.A.					DRAWING NO. SHEET NO.
	Checked by					
	DRAWING SCALE:					

URS

dante_mariscal 1/16/2009 11:23:47 AM

NAME PL NO SPLEEJ

BRUG MODEL

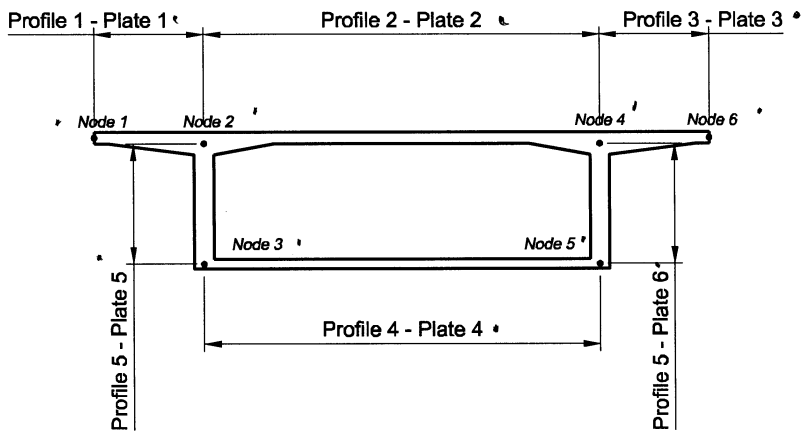

√DWL
01/16/09

4.10.1/2

HALF SIZE PRINT - 11x17

Designed by
Drawn by R.V.A.
Checked by
DRAWING SCALE:

URS

URS Corporation Southern
7650 Corporate Center Drive
Suite 400
Miami, FL 33126-1220
Tel: (305) 262-7486
C.A. No. EB 00000002

TYPICAL SECTION - Transverse Analysis

SECTION VB

DRAWING NO.
SHEET NO.
NAME P.C. NO.
SFLB2.2

17/14/2009 10:32:00 AM

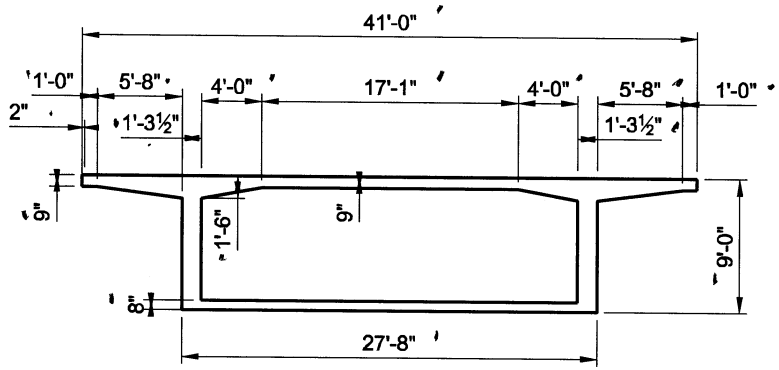

DIMENSIONS

√ Dmm
01/16/09

4.10.1/3

HALF SIZE PRINT - 11x17			
No.	Date	App.	Revisions

Designed by
Drawn by R.V.A.
Checked by
DRAWING SCALE:

URS
URS Corporation Southern
7650 Corporate Center Drive
Suite 400
Miami, FL 33126-1220
Tel: (305) 262-7448
C.A. No. EB 00000002

TYPICAL SECTION - Transverse Analysis

NAME P.C. NO.
SFILE.CLE

SECTION VB

DRAWING NO.
SHEET NO.

pdfdist_Transfer
1/22/2009 8:07:27 AM

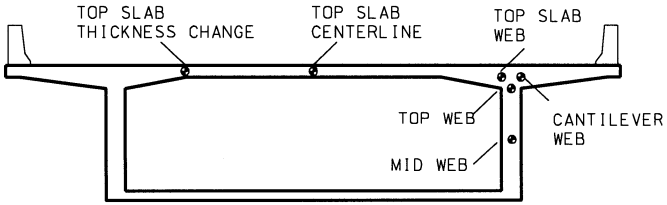

RATING POINTS

√Dem
01/16/09

4.10.1/4

HALF SIZE PRINT - 11x17		
No.	Date	App.

Designed by
Drawn by R.V.A.
Checked by
DRAWING SCALE:

URS Corporation Southern
7650 Corporate Center Drive
Suite 400
Miami, FL 33126-1220
Tel: (305) 262-7486
C.A. No.: EB 00000002

TYPICAL SECTION - Transverse Analysis

SECTION VB

DRAWING NO.
SHEET NO.
NAME P.C. NO.
FILE

URS CORPORATION	Made by:	PT	Date: 12-Jan-09	Job Number: 25626272.00001
	Checked by:	DLM	Date: 1/16/09	Sheet Number:
Brug Joints and Members	Backchecked by:		Date:	

V:\Projects\Cline Avenue\Load Rating Analysis\Transverse Analysis\Spreadsheet\[Brug Input.xls]Model_Joints Brugh_V_B

Data measured from Microstation File

V:\Projects\Cline Avenue\Load Rating Analysis\Transverse Analysis\Spreadsheet\[Brug Input.xls]Model_Joints Brugh_V_B

* Average areas and average moment of Inertia were used on the GTSTRUDL verification

GTStrudl Joint	X ft	Y ft	Length ft	Height ft	Area* ft	IZ* ft
1	0.0000	8.2500	1.000	0.750	0.750	0.035
2	1.0000	8.2500	2.833	0.750	0.938	0.069
3	3.8333	8.2500	2.833	1.125	1.313	0.188
4	6.6667	8.2500	0.646	1.500	1.500	0.281
5	7.3125	8.2500	0.646	1.500	1.500	0.281
6	7.9583	8.2500	4.000	1.500	1.125	0.119
7	11.9583	8.2500	8.542	0.750	0.750	0.035
8	20.5000	8.2500	8.542	0.750	0.750	0.035
9	29.0416	8.2500	4.000	0.750	1.125	0.119
10	33.0416	8.2500	0.646	1.500	1.500	0.281
11	33.6875	8.2500	0.646	1.500	1.500	0.281
12	34.3333	8.2500	2.833	1.500	1.313	0.188
13	37.1666	8.2500	2.833	1.125	0.938	0.069
14	40.0000	8.2500	1.000	0.750	0.750	0.035
15	41.0000	8.2500	0.750	0.750	1.292	0.180
16	7.3125	7.5000	3.417	1.292	1.292	0.180
17	7.3125	4.0833	3.417	1.292	1.292	0.180
18	7.3125	0.6667	0.333	1.292	1.292	0.180
19	7.3125	0.3333	0.646	1.292	0.667	0.025
20	7.9583	0.3333	12.542	0.667	0.667	0.025
21	20.5000	0.3333	12.542	0.667	0.667	0.025
22	33.0416	0.3333	0.646	0.667	0.667	0.025
23	33.6875	0.3333	0.333	0.667	1.292	0.180
24	33.6875	0.6667	3.417	1.292	1.292	0.180
25	33.6875	4.0833	3.417	1.292	1.292	0.180
26	33.6875	7.5000	0.750	1.292	1.292	0.180

LEFT CANTILEVER

GT Joint	Brug Section	Brug Joint	Length	Height
1	1L	1	0.000	0.750
2	1A	2	1.000	0.750
3	1B	3	3.833	1.125
4	1C	4	6.667	1.500
5	1R	5	7.313	1.500

CENTER SPAN

GT Joint	Brug Section	Brug Joint	Length	Height
5	2L	1	0.000	1.500
6	2A	2	0.646	1.500
7	2B	3	4.646	0.750
8	2C	4	13.188	0.750
9		5	21.729	0.750
10		6	25.729	1.500
11	2R	7	26.375	1.500

RIGHT CANTILEVER

GT Joint	Brug Section	Brug Joint	Length	Height
11	3L	1	0.000	1.500
12	3A	2	0.646	1.500
13	3B	3	3.479	1.125
14	3C	4	6.313	0.750
15	3R	5	7.313	0.750

Bottom Slab

GT Joint	Brug Section	Brug Joint	Length	Height
19	4L	1	0.000	0.667
20	4A	2	0.646	0.667
21	4B	3	13.188	0.667
22	4C	4	25.729	0.667
23	4R	5	26.375	0.667

WEB

GT Joint	Brug Section	Brug Joint	Length	Height
5	5-6 Top	1	0.000	1.292
16	5-6 A	2	0.750	1.292
17	5-6 B	3	4.167	1.292
18	5-6 C	4	7.583	1.292
19	5-6 Abottom	5	7.917	1.292

4.10.1/5

4.10.2 Brug Input AASHTO Lanes

```
* start ; column 11-30 can be used to have your own text on the top of each page
*   5   10   15   20   25   30   35   40   45   50   55   60   65   70   75   80
*   V    V    V    V    V    V    V    V    V    V    V    V    V    V    V    V
00001  1 1     VEH: HL93- TRUCK - SINGLE TRUCK
* code 1001
Cline Avenue - Striped Lanes - Single Box 41' Wide
* code 1002
    2         1
* code 1003
*   5   10   15   20   25   30   35   40   45   50   55   60   65   70   75   80
*   V    V    V    V    V    V    V    V    V    V    V    V    V    V    V    V
250.0      113.0      41.00    1.0       1.0       1.3
* code 1004
    1    0    2
* code 1005
   72    1
* code 1005a
* location traffic lanes
10.167
* maximum and minimum truck
7.917     29.083    10.000
* code 1007, linear loads
0.7350    0.441
40.2650   0.441
* code 1201
    6    5    3    1    2
* code 1202 coordinates
 0.0000   8.2500
 7.3125   8.2500
 7.3125   0.3333
33.6875   8.2500
33.6875   0.3333
41.0000   8.2500
* code 1203 - profile 1
    5    2    3    4
0.000     0.750
1.000     0.750
3.833     1.125
6.667     1.500
7.313     1.500
* code 1203 - profile 2
    7    2    3    4
0.000     1.500
0.646     1.500
4.646     0.750
13.188    0.750
21.729    0.750
25.729    1.500
26.375    1.500
* code 1203 - profile 3
    5    2    3    4
0.000     1.500
0.646     1.500
3.479     1.125
6.313     0.750
7.313     0.750
* code 1203 - profile 4
    5    2    3    4
0.000     0.667
0.646     0.667
13.188    0.667
25.729    0.667
26.375    0.667
* code 1203 - profile 5
    5    2    3    4
0.000     1.292
0.750     1.292
4.167     1.292
7.583     1.292
7.917     1.292
* code 1204 - assembling boxgirder
    1    2    1
    2    4    2
    4    6    3
    3    5    4
    2    3    5
    4    5    5
* code 1205 control code
    1    2   13    1    1    0    4    3     1.0       1.0
* code 1206 wheels/axle
       0.0
```

1V_B_SL_HL93_truck_EL.txt 9/11/2009

```
       1.5
       6.0
       7.5 0.833
* code 1207 definition axles
0.0       0.1
14.0      0.4
28.0      0.4
* code 1208 - accuracy
0.00001   0.00001   0.00001   .00001    .00001
* code 1209 number sections
   29
* code definition sections
   1A   1B   1C   1R   2L   2A   2B   2C   2R   3L   3A   3B   3C   3R   4L   4A
   4B   4C   4R   5L   5A   5B   5C   5R   6L   6A   6B   6C   6R
* code 1210 - density conrete
0.156
* code 1211 - extra forces selfweight

* code 1212 - surcharge
1.025
* code 1213 - Prestressing Layout - NONE
```

1V_B_SL_HL93_tandem_EL.txt 9/11/2009

```
* start ; column 11-30 can be used to have your own text on the top of each page
*   5   10   15   20   25   30   35   40   45   50   55   60   65   70   75   80
*   V    V    V    V    V    V    V    V    V    V    V    V    V    V    V    V
00001  1 1     VEH: HL93- TANDEM - SINGLE TRUCK
* code 1001
Cline Avenue - Striped Lanes - Single Box 41' Wide
* code 1002
    2         1
* code 1003
*   5   10   15   20   25   30   35   40   45   50   55   60   65   70   75   80
*   V    V    V    V    V    V    V    V    V    V    V    V    V    V    V    V
250.0      113.0      41.00    1.0       1.0       1.3
* code 1004
    1    0    2
* code 1005
   50    1
* code 1005a
* location traffic lanes
10.167
* maximum and minimum truck
7.917     29.083    10.000
* code 1007, linear loads
0.7350    0.441
40.2650   0.441
* code 1201
    6    5    3    1    2
* code 1202 coordinates
 0.0000   8.2500
 7.3125   8.2500
 7.3125   0.3333
33.6875   8.2500
33.6875   0.3333
41.0000   8.2500
* code 1203 - profile 1
    5    2    3    4
0.000     0.750
1.000     0.750
3.833     1.125
6.667     1.500
7.313     1.500
* code 1203 - profile 2
    7    2    3    4
0.000     1.500
0.646     1.500
4.646     0.750
13.188    0.750
21.729    0.750
25.729    1.500
26.375    1.500
* code 1203 - profile 3
    5    2    3    4
0.000     1.500
0.646     1.500
3.479     1.125
6.313     0.750
7.313     0.750
* code 1203 - profile 4
    5    2    3    4
0.000     0.667
0.646     0.667
13.188    0.667
25.729    0.667
26.375    0.667
* code 1203 - profile 5
    5    2    3    4
0.000     1.292
0.750     1.292
4.167     1.292
7.583     1.292
7.917     1.292
* code 1204 - assembling boxgirder
    1    2    1
    2    4    2
    4    6    3
    3    5    4
    2    3    5
    4    5    5
* code 1205 control code
    1    2   13    1    1    0    4    2     1.0       1.0
* code 1206 wheels/axle
       0.0
```

1V_B_SL_HL93_tandem_EL.txt 9/11/2009

```
       1.5
       6.0
       7.5 0.833
* code 1207 definition axles
0.0       0.5
4.0       0.5
* code 1208 - accuracy
0.00001   0.00001   0.00001   .00001    .00001
* code 1209 number sections
   29
* code definition sections
   1A   1B   1C   1R   2L   2A   2B   2C   2R   3L   3A   3B   3C   3R   4L   4A
   4B   4C   4R   5L   5A   5B   5C   5R   6L   6A   6B   6C   6R
* code 1210 - density conrete
0.156
* code 1211 - extra forces selfweight

* code 1212 - surcharge
1.025
* code 1213 - Prestressing Layout - NONE
```

```
* start ; column 11-30 can be used to have your own text on the top of each page
*   5   10   15   20   25   30   35   40   45   50   55   60   65   70   75   80
*   V    V    V    V    V    V    V    V    V    V    V    V    V    V    V    V
00001  1 1     VEH: R1 - TOLL ROAD LOADING No. 1  - SINGLE TRUCK
* code 1001
Cline Avenue - Striped Lanes - Single Box 41' Wide
* code 1002
    2         1
* code 1003
*   5   10   15   20   25   30   35   40   45   50   55   60   65   70   75   80
*   V    V    V    V    V    V    V    V    V    V    V    V    V    V    V    V
250.0      113.0      41.00    1.0       1.0       1.3
* code 1004
    1    0    2
* code 1005
   90    1
* code 1005a
* location traffic lanes
10.167
* maximum and minimum truck
7.917     29.083    10.000
* code 1007, linear loads
0.7350    0.441
40.2650   0.441
* code 1201
    6    5    3    1    2
* code 1202 coordinates
 0.0000   8.2500
 7.3125   8.2500
 7.3125   0.3333
33.6875   8.2500
33.6875   0.3333
41.0000   8.2500
* code 1203 - profile 1
    5    2    3    4
0.000     0.750
1.000     0.750
3.833     1.125
6.667     1.500
7.313     1.500
* code 1203 - profile 2
    7    2    3    4
0.000     1.500
0.646     1.500
4.646     0.750
13.188    0.750
21.729    0.750
25.729    1.500
26.375    1.500
* code 1203 - profile 3
    5    2    3    4
0.000     1.500
0.646     1.500
3.479     1.125
6.313     0.750
7.313     0.750
* code 1203 - profile 4
    5    2    3    4
0.000     0.667
0.646     0.667
13.188    0.667
25.729    0.667
26.375    0.667
* code 1203 - profile 5
    5    2    3    4
0.000     1.292
0.750     1.292
4.167     1.292
7.583     1.292
7.917     1.292
* code 1204 - assembling boxgirder
    1    2    1
    2    4    2
    4    6    3
    3    5    4
    2    3    5
    4    5    5
* code 1205 control code
    1    2   13    1    1    0    4    5     1.0       1.0
* code 1206 wheels/axle
       0.0
```

1V_B_SL_R1_EL.txt 9/11/2009

```
       1.5
       6.0
       7.5 0.833
* code 1207 definition axles
0.00      18.00
10.00     18.00
14.00     18.00
24.00     18.00
28.00     18.00
* code 1208 - accuracy
0.00001   0.00001   0.00001   .00001    .00001
* code 1209 number sections
   29
* code definition sections
   1A   1B   1C   1R   2L   2A   2B   2C   2R   3L   3A   3B   3C   3R   4L   4A
   4B   4C   4R   5L   5A   5B   5C   5R   6L   6A   6B   6C   6R
* code 1210 - density conrete
0.156
* code 1211 - extra forces selfweight

* code 1212 - surcharge
1.025
* code 1213 - Prestressing Layout - NONE
```

```
* start ; column 11-30 can be used to have your own text on the top of each page
*   5   10   15   20   25   30   35   40   45   50   55   60   65   70   75   80
*   V    V    V    V    V    V    V    V    V    V    V    V    V    V    V    V
00001  1 1     VEH: R2 - TOLL ROAD LOADING No. 2 - SINGLE TRUCK
* code 1001
Cline Avenue - Striped Lanes - Single Box 41' Wide
* code 1002
    2         1
* code 1003
*   5   10   15   20   25   30   35   40   45   50   55   60   65   70   75   80
*   V    V    V    V    V    V    V    V    V    V    V    V    V    V    V    V
250.0      113.0      41.00    1.0       1.0       1.3
* code 1004
    1    0    2
* code 1005
   90    1
* code 1005a
* location traffic lanes
10.167
* maximum and minimum truck
7.917     29.083    10.000
* code 1007, linear loads
0.7350    0.441
40.2650   0.441
* code 1201
    6    5    3    1    2
* code 1202 coordinates
 0.0000   8.2500
 7.3125   8.2500
 7.3125   0.3333
33.6875   8.2500
33.6875   0.3333
41.0000   8.2500
* code 1203 - profile 1
    5    2    3    4
0.000     0.750
1.000     0.750
3.833     1.125
6.667     1.500
7.313     1.500
* code 1203 - profile 2
    7    2    3    4
0.000     1.500
0.646     1.500
4.646     0.750
13.188    0.750
21.729    0.750
25.729    1.500
26.375    1.500
* code 1203 - profile 3
    5    2    3    4
0.000     1.500
0.646     1.500
3.479     1.125
6.313     0.750
7.313     0.750
* code 1203 - profile 4
    5    2    3    4
0.000     0.667
0.646     0.667
13.188    0.667
25.729    0.667
26.375    0.667
* code 1203 - profile 5
    5    2    3    4
0.000     1.292
0.750     1.292
4.167     1.292
7.583     1.292
7.917     1.292
* code 1204 - assembling boxgirder
    1    2    1
    2    4    2
    4    6    3
    3    5    4
    2    3    5
    4    5    5
* code 1205 control code
    1    2   13    1    1    0    4    4     1.0       1.0
* code 1206 wheels/axle
       0.0
```

1V_B_SL_R2_EL.txt 9/11/2009

```
       1.5
       6.0
       7.5 0.833
* code 1207 definition axles
0.00      22.50
14.00     22.50
23.00     22.50
37.00     22.50
* code 1208 - accuracy
0.00001   0.00001   0.00001   .00001    .00001
* code 1209 number sections
   29
* code definition sections
   1A   1B   1C   1R   2L   2A   2B   2C   2R   3L   3A   3B   3C   3R   4L   4A
   4B   4C   4R   5L   5A   5B   5C   5R   6L   6A   6B   6C   6R
* code 1210 - density conrete
0.156
* code 1211 - extra forces selfweight

* code 1212 - surcharge
1.025
* code 1213 - Prestressing Layout - NONE
```

```
* start ; column 11-30 can be used to have your own text on the top of each page
*   5   10   15   20   25   30   35   40   45   50   55   60   65   70   75   80
*   V    V    V    V    V    V    V    V    V    V    V    V    V    V    V    V
00001  1 1     VEH: R3 - TOLL ROAD LOADING No. 3 - SINGLE TRUCK
* code 1001
Cline Avenue - Striped Lanes - Single Box 41' Wide
* code 1002
    2         1
* code 1003
*   5   10   15   20   25   30   35   40   45   50   55   60   65   70   75   80
*   V    V    V    V    V    V    V    V    V    V    V    V    V    V    V    V
250.0      113.0      41.00    1.0       1.0       1.3
* code 1004
    1    0    2
* code 1005
  126    1
* code 1005a
* location traffic lanes
10.167
* maximum and minimum truck
7.917     29.083    10.000
* code 1007, linear loads
0.7350    0.441
40.2650   0.441
* code 1201
    6    5    3    1    2
* code 1202 coordinates
 0.0000   8.2500
 7.3125   8.2500
 7.3125   0.3333
33.6875   8.2500
33.6875   0.3333
41.0000   8.2500
* code 1203 - profile 1
    5    2    3    4
0.000     0.750
1.000     0.750
3.833     1.125
6.667     1.500
7.313     1.500
* code 1203 - profile 2
    7    2    3    4
0.000     1.500
0.646     1.500
4.646     0.750
13.188    0.750
21.729    0.750
25.729    1.500
26.375    1.500
* code 1203 - profile 3
    5    2    3    4
0.000     1.500
0.646     1.500
3.479     1.125
6.313     0.750
7.313     0.750
* code 1203 - profile 4
    5    2    3    4
0.000     0.667
0.646     0.667
13.188    0.667
25.729    0.667
26.375    0.667
* code 1203 - profile 5
    5    2    3    4
0.000     1.292
0.750     1.292
4.167     1.292
7.583     1.292
7.917     1.292
* code 1204 - assembling boxgirder
    1    2    1
    2    4    2
    4    6    3
    3    5    4
    2    3    5
    4    5    5
* code 1205 control code
    1    2   13    1    1    0    4    7     1.0       1.0
* code 1206 wheels/axle
       0.0
```

1V_B_SL_R3_EL.txt 9/11/2009

```
       1.5
       6.0
       7.5 0.833
* code 1207 definition axles
0.00      18.00
10.00     18.00
14.00     18.00
40.00     18.00
44.00     18.00
56.00     18.00
76.00     18.00
* code 1208 - accuracy
0.00001   0.00001   0.00001   .00001    .00001
* code 1209 number sections
   29
* code definition sections
   1A   1B   1C   1R   2L   2A   2B   2C   2R   3L   3A   3B   3C   3R   4L   4A
   4B   4C   4R   5L   5A   5B   5C   5R   6L   6A   6B   6C   6R
* code 1210 - density conrete
0.156
* code 1211 - extra forces selfweight

* code 1212 - surcharge
1.025
* code 1213 - Prestressing Layout - NONE
```

1V_B_SL_R4_EL.txt 9/11/2009

```
* start ; column 11-30 can be used to have your own text on the top of each page
*   5   10   15   20   25   30   35   40   45   50   55   60   65   70   75   80
*   V    V    V    V    V    V    V    V    V    V    V    V    V    V    V    V
00001  1 1     VEH: R4 - MICHIGAN TRUCK TRAIN No.5 - SINGLE TRUCK
* code 1001
Cline Avenue - Striped Lanes - Single Box 41' Wide
* code 1002
    2         1
* code 1003
*   5   10   15   20   25   30   35   40   45   50   55   60   65   70   75   80
*   V    V    V    V    V    V    V    V    V    V    V    V    V    V    V    V
250.0      113.0      41.00    1.0       1.0       1.3
* code 1004
    1    0    2
* code 1005
  134    1
* code 1005a
* location traffic lanes
10.167
* maximum and minimum truck
7.917     29.083    10.000
* code 1007, linear loads
0.7350    0.441
40.2650   0.441
* code 1201
    6    5    3    1    2
* code 1202 coordinates
 0.0000   8.2500
 7.3125   8.2500
 7.3125   0.3333
33.6875   8.2500
33.6875   0.3333
41.0000   8.2500
* code 1203 - profile 1
    5    2    3    4
0.000     0.750
1.000     0.750
3.833     1.125
6.667     1.500
7.313     1.500
* code 1203 - profile 2
    7    2    3    4
0.000     1.500
0.646     1.500
4.646     0.750
13.188    0.750
21.729    0.750
25.729    1.500
26.375    1.500
* code 1203 - profile 3
    5    2    3    4
0.000     1.500
0.646     1.500
3.479     1.125
6.313     0.750
7.313     0.750
* code 1203 - profile 4
    5    2    3    4
0.000     0.667
0.646     0.667
13.188    0.667
25.729    0.667
26.375    0.667
* code 1203 - profile 5
    5    2    3    4
0.000     1.292
0.750     1.292
4.167     1.292
7.583     1.292
7.917     1.292
* code 1204 - assembling boxgirder
    1    2    1
    2    4    2
    4    6    3
    3    5    4
    2    3    5
    4    5    5
* code 1205 control code
    1    2   13    1    1    0    4    8     1.0       1.0
* code 1206 wheels/axle
       0.0
```

1V_B_SL_R4_EL.txt 9/11/2009

```
       1.5
       6.0
       7.5 0.833
* code 1207 definition axles
0.00      12.00
9.00      16.00
12.50     16.00
21.50     18.00
30.50     18.00
39.50     18.00
48.50     18.00
57.50     18.00
* code 1208 - accuracy
0.00001   0.00001   0.00001   .00001    .00001
* code 1209 number sections
   29
* code definition sections
   1A   1B   1C   1R   2L   2A   2B   2C   2R   3L   3A   3B   3C   3R   4L   4A
   4B   4C   4R   5L   5A   5B   5C   5R   6L   6A   6B   6C   6R
* code 1210 - density conrete
0.156
* code 1211 - extra forces selfweight

* code 1212 - surcharge
1.025
* code 1213 - Prestressing Layout - NONE
```

```
* start ; column 11-30 can be used to have your own text on the top of each page
*   5   10   15   20   25   30   35   40   45   50   55   60   65   70   75   80
*   V    V    V    V    V    V    V    V    V    V    V    V    V    V    V    V
00001  1 1     VEH: R5 - MICHIGAN TRUCK TRAIN No. 8
* code 1001
Cline Avenue - Striped Lanes - Single Box 41' Wide
* code 1002
    2         1
* code 1003
*   5   10   15   20   25   30   35   40   45   50   55   60   65   70   75   80
*   V    V    V    V    V    V    V    V    V    V    V    V    V    V    V    V
250.0      113.0      41.00    1.0       1.0       1.3
* code 1004
    1    0    2
* code 1005
* Vehicle weight is 134.2 Kips, rounded to 135
  135    1
* code 1005a
* location traffic lanes
10.167
* maximum and minimum truck
7.917     29.083    10.000
* code 1007, linear loads
0.7350    0.441
40.2650   0.441
* code 1201
    6    5    3    1    2
* code 1202 coordinates
 0.0000   8.2500
 7.3125   8.2500
 7.3125   0.3333
33.6875   8.2500
33.6875   0.3333
41.0000   8.2500
* code 1203 - profile 1
    5    2    3    4
0.000     0.750
1.000     0.750
3.833     1.125
6.667     1.500
7.313     1.500
* code 1203 - profile 2
    7    2    3    4
0.000     1.500
0.646     1.500
4.646     0.750
13.188    0.750
21.729    0.750
25.729    1.500
26.375    1.500
* code 1203 - profile 3
    5    2    3    4
0.000     1.500
0.646     1.500
3.479     1.125
6.313     0.750
7.313     0.750
* code 1203 - profile 4
    5    2    3    4
0.000     0.667
0.646     0.667
13.188    0.667
25.729    0.667
26.375    0.667
* code 1203 - profile 5
    5    2    3    4
0.000     1.292
0.750     1.292
4.167     1.292
7.583     1.292
7.917     1.292
* code 1204 - assembling boxgirder
    1    2    1
    2    4    2
    4    6    3
    3    5    4
    2    3    5
    4    5    5
* code 1205 control code
    1    2   13    1    1    0    4   11     1.0       1.0
* code 1206 wheels/axle
```

1V_B_SL_R5_EL.txt 9/11/2009

```
       0.0
       1.5
       6.0
       7.5 0.833
* code 1207 definition axles
0.00      12.00
9.00      13.40
12.50     13.40
21.50     10.90
25.00     10.90
28.50     10.90
32.00     10.90
35.50     10.90
39.00     10.90
48.00     15.00
57.00     15.00
* code 1208 - accuracy
0.00001   0.00001   0.00001   .00001    .00001
* code 1209 number sections
   29
* code definition sections
   1A   1B   1C   1R   2L   2A   2B   2C   2R   3L   3A   3B   3C   3R   4L   4A
   4B   4C   4R   5L   5A   5B   5C   5R   6L   6A   6B   6C   6R
* code 1210 - density conrete
0.156
* code 1211 - extra forces selfweight

* code 1212 - surcharge
1.025
* code 1213 - Prestressing Layout - NONE
```

1V_B_SL_S1_EL.txt 4/17/2009

```
* start ; column 11-30 can be used to have your own text on the top of each page
*   5   10   15   20   25   30   35   40   45   50   55   60   65   70   75   80
*   V    V    V    V    V    V    V    V    V    V    V    V    V    V    V    V
00001  1 1     VEH: S1 - SPECIAL TRUCK 11 AXLE - SINGLE TRUCK
* code 1001
Cline Avenue - Striped Lanes - Single Box 41' Wide
* code 1002
    2         1
* code 1003
*   5   10   15   20   25   30   35   40   45   50   55   60   65   70   75   80
*   V    V    V    V    V    V    V    V    V    V    V    V    V    V    V    V
250.0      250.0      41.00    1.0       1.0       1.3
* code 1004
    1    0    2
* code 1005
  258    1
* code 1005a
* location traffic lanes
10.167
* maximum and minimum truck
7.917     29.083    10.000
* code 1007, linear loads
0.7350    0.441
40.2650   0.441
* code 1201
    6    5    3    1    2
* code 1202 coordinates
 0.0000   8.2500
 7.3125   8.2500
 7.3125   0.3333
33.6875   8.2500
33.6875   0.3333
41.0000   8.2500
* code 1203 - profile 1
    5    2    3    4
0.000     0.750
1.000     0.750
3.833     1.125
6.667     1.500
7.313     1.500
* code 1203 - profile 2
    7    2    3    4
0.000     1.500
0.646     1.500
4.646     0.750
13.188    0.750
21.729    0.750
25.729    1.500
26.375    1.500
* code 1203 - profile 3
    5    2    3    4
0.000     1.500
0.646     1.500
3.479     1.125
6.313     0.750
7.313     0.750
* code 1203 - profile 4
    5    2    3    4
0.000     0.667
0.646     0.667
13.188    0.667
25.729    0.667
26.375    0.667
* code 1203 - profile 5
    5    2    3    4
0.000     1.292
0.750     1.292
4.167     1.292
7.583     1.292
7.917     1.292
* code 1204 - assembling boxgirder
    1    2    1
    2    4    2
    4    6    3
    3    5    4
    2    3    5
    4    5    5
* code 1205 control code
    1    2   13    1    1    0    4   11     1.0       1.0
* code 1206 wheels/axle
       0.0
```

1V_B_SL_S1_EL.txt 4/17/2009

```
       1.5
       6.0
       7.5 0.833
* code 1207 definition axles
0.00      12.00
11.50     24.60
16.67     24.60
21.67     24.60
34.83     24.60
39.33     24.60
89.92     24.60
94.42     24.60
98.92     24.60
112.50     24.60
117.00     24.60
* code 1208 - accuracy
0.00001   0.00001   0.00001   .00001    .00001
* code 1209 number sections
   29
* code definition sections
   1A   1B   1C   1R   2L   2A   2B   2C   2R   3L   3A   3B   3C   3R   4L   4A
   4B   4C   4R   5L   5A   5B   5C   5R   6L   6A   6B   6C   6R
* code 1210 - density conrete
0.156
* code 1211 - extra forces selfweight

* code 1212 - surcharge
1.025
* code 1213 - Prestressing Layout - NONE
```

```
* start ; column 11-30 can be used to have your own text on the top of each page
*   5   10   15   20   25   30   35   40   45   50   55   60   65   70   75   80
*   V    V    V    V    V    V    V    V    V    V    V    V    V    V    V    V
00001  1 1     VEH: S2 - SPECIAL TRUCK - 13 AXLE - SINGLE TRUCK
* code 1001
Cline Avenue - Striped Lanes - Single Box 41' Wide
* code 1002
    2         1
* code 1003
*   5   10   15   20   25   30   35   40   45   50   55   60   65   70   75   80
*   V    V    V    V    V    V    V    V    V    V    V    V    V    V    V    V
250.0      250.0      41.00    1.0       1.0       1.3
* code 1004
    1    0    2
* code 1005
  267    1
* code 1005a
* location traffic lanes
10.167
* maximum and minimum truck
7.917     29.083    10.000
* code 1007, linear loads
0.7350    0.441
40.2650   0.441
* code 1201
    6    5    3    1    2
* code 1202 coordinates
 0.0000   8.2500
 7.3125   8.2500
 7.3125   0.3333
33.6875   8.2500
33.6875   0.3333
41.0000   8.2500
* code 1203 - profile 1
    5    2    3    4
0.000     0.750
1.000     0.750
3.833     1.125
6.667     1.500
7.313     1.500
* code 1203 - profile 2
    7    2    3    4
0.000     1.500
0.646     1.500
4.646     0.750
13.188    0.750
21.729    0.750
25.729    1.500
26.375    1.500
* code 1203 - profile 3
    5    2    3    4
0.000     1.500
0.646     1.500
3.479     1.125
6.313     0.750
7.313     0.750
* code 1203 - profile 4
    5    2    3    4
0.000     0.667
0.646     0.667
13.188    0.667
25.729    0.667
26.375    0.667
* code 1203 - profile 5
    5    2    3    4
0.000     1.292
0.750     1.292
4.167     1.292
7.583     1.292
7.917     1.292
* code 1204 - assembling boxgirder
    1    2    1
    2    4    2
    4    6    3
    3    5    4
    2    3    5
    4    5    5
* code 1205 control code
    1    2   13    1    1    0    4   13     1.0       1.0
* code 1206 wheels/axle
       0.0
```

1V_B_SL_S2_EL.txt 4/17/2009

```
       1.5
       6.0
       7.5 0.833
* code 1207 definition axles
0.00      15.00
16.50     21.00
21.00     21.00
25.50     21.00
39.50     21.00
44.00     21.00
48.50     21.00
96.50     21.00
101.00    21.00
105.50    21.00
121.00    21.00
125.50    21.00
130.00    21.00
* code 1208 - accuracy
0.00001   0.00001   0.00001   .00001    .00001
* code 1209 number sections
   29
* code definition sections
   1A   1B   1C   1R   2L   2A   2B   2C   2R   3L   3A   3B   3C   3R   4L   4A
   4B   4C   4R   5L   5A   5B   5C   5R   6L   6A   6B   6C   6R
* code 1210 - density conrete
0.156
* code 1211 - extra forces selfweight

* code 1212 - surcharge
1.025
* code 1213 - Prestressing Layout - NONE
```

```
* start ; column 11-30 can be used to have your own text on the top of each page
*   5   10   15   20   25   30   35   40   45   50   55   60   65   70   75   80
*   V    V    V    V    V    V    V    V    V    V    V    V    V    V    V    V
00001  1 1     VEH: S3 - SPECIAL TRUCK - 14 AXLE - SINGLE TRUCK
* code 1001
Cline Avenue - Striped Lanes - Single Box 41' Wide
* code 1002
    2         1
* code 1003
*   5   10   15   20   25   30   35   40   45   50   55   60   65   70   75   80
*   V    V    V    V    V    V    V    V    V    V    V    V    V    V    V    V
250.0      250.0      41.00    1.0       1.0       1.3
* code 1004
    1    0    2
* code 1005
  350    1
* code 1005a
* location traffic lanes
10.167
* maximum and minimum truck
7.917     29.083    10.000
* code 1007, linear loads
0.7350    0.441
40.2650   0.441
* code 1201
    6    5    3    1    2
* code 1202 coordinates
 0.0000   8.2500
 7.3125   8.2500
 7.3125   0.3333
33.6875   8.2500
33.6875   0.3333
41.0000   8.2500
* code 1203 - profile 1
    5    2    3    4
0.000     0.750
1.000     0.750
3.833     1.125
6.667     1.500
7.313     1.500
* code 1203 - profile 2
    7    2    3    4
0.000     1.500
0.646     1.500
4.646     0.750
13.188    0.750
21.729    0.750
25.729    1.500
26.375    1.500
* code 1203 - profile 3
    5    2    3    4
0.000     1.500
0.646     1.500
3.479     1.125
6.313     0.750
7.313     0.750
* code 1203 - profile 4
    5    2    3    4
0.000     0.667
0.646     0.667
13.188    0.667
25.729    0.667
26.375    0.667
* code 1203 - profile 5
    5    2    3    4
0.000     1.292
0.750     1.292
4.167     1.292
7.583     1.292
7.917     1.292
* code 1204 - assembling boxgirder
    1    2    1
    2    4    2
    4    6    3
    3    5    4
    2    3    5
    4    5    5
* code 1205 control code
    1    2   13    1    1    0    4   14     1.0       1.0
* code 1206 wheels/axle
       0.0
```

1V_B_SL_S3_EL.txt 4/17/2009

```
       1.5
       6.0
       7.5 0.833
* code 1207 definition axles
0.00      13.00
14.50     25.00
19.00     25.00
23.50     25.00
50.50     23.50
54.67     23.50
58.83     23.50
102.83    23.50
107.33    28.00
111.83    28.00
116.33    28.00
132.17    28.00
136.67    28.00
141.17    28.00
* code 1208 - accuracy
0.00001   0.00001   0.00001   .00001    .00001
* code 1209 number sections
   29
* code definition sections
   1A   1B   1C   1R   2L   2A   2B   2C   2R   3L   3A   3B   3C   3R   4L   4A
   4B   4C   4R   5L   5A   5B   5C   5R   6L   6A   6B   6C   6R
* code 1210 - density conrete
0.156
* code 1211 - extra forces selfweight

* code 1212 - surcharge
1.025
* code 1213 - Prestressing Layout - NONE
```

```
* start ; column 11-30 can be used to have your own text on the top of each page
*   5   10   15   20   25   30   35   40   45   50   55   60   65   70   75   80
*   V    V    V    V    V    V    V    V    V    V    V    V    V    V    V    V
00001  1 1     VEH: S4 - SUPER LOAD -19 AXLES - SINGLE TRUCK
* code 1001
Cline Avenue - Striped Lanes - Single Box 41' Wide
* code 1002
    2         1
* code 1003
*   5   10   15   20   25   30   35   40   45   50   55   60   65   70   75   80
*   V    V    V    V    V    V    V    V    V    V    V    V    V    V    V    V
250.0      250.0      41.00    1.0       1.0       1.3
* code 1004
    1    0    2
* code 1005
  305    1
* code 1005a
* location traffic lanes
10.167
* maximum and minimum truck
7.917     29.083    10.000
* code 1007, linear loads
0.7350    0.441
40.2650   0.441
* code 1201
    6    5    3    1    2
* code 1202 coordinates
 0.0000   8.2500
 7.3125   8.2500
 7.3125   0.3333
33.6875   8.2500
33.6875   0.3333
41.0000   8.2500
* code 1203 - profile 1
    5    2    3    4
0.000     0.750
1.000     0.750
3.833     1.125
6.667     1.500
7.313     1.500
* code 1203 - profile 2
    7    2    3    4
0.000     1.500
0.646     1.500
4.646     0.750
13.188    0.750
21.729    0.750
25.729    1.500
26.375    1.500
* code 1203 - profile 3
    5    2    3    4
0.000     1.500
0.646     1.500
3.479     1.125
6.313     0.750
7.313     0.750
* code 1203 - profile 4
    5    2    3    4
0.000     0.667
0.646     0.667
13.188    0.667
25.729    0.667
26.375    0.667
* code 1203 - profile 5
    5    2    3    4
0.000     1.292
0.750     1.292
4.167     1.292
7.583     1.292
7.917     1.292
* code 1204 - assembling boxgirder
    1    2    1
    2    4    2
    4    6    3
    3    5    4
    2    3    5
    4    5    5
* code 1205 control code
    1    2   13    1    1    0    4   19     1.0       1.0
* code 1206 wheels/axle
       0.0
```

1V_B_SL_S4_EL.txt 4/17/2009

```
       1.5
       6.0
       7.5 0.833
* code 1207 definition axles
0.00      13.00
13.50     16.48
17.83     16.48
31.33     16.48
35.42     15.99
39.50     15.99
45.50     15.99
49.58     16.37
53.67     16.37
103.58    16.37
107.67    16.64
114.17    16.64
118.25    15.15
122.33    15.15
126.42    15.15
135.92    15.15
140.00    17.20
144.08    17.20
148.17    17.20
* code 1208 - accuracy
0.00001   0.00001   0.00001   .00001    .00001
* code 1209 number sections
   29
* code definition sections
   1A   1B   1C   1R   2L   2A   2B   2C   2R   3L   3A   3B   3C   3R   4L   4A
   4B   4C   4R   5L   5A   5B   5C   5R   6L   6A   6B   6C   6R
* code 1210 - density conrete
0.156
* code 1211 - extra forces selfweight

* code 1212 - surcharge
1.025
* code 1213 - Prestressing Layout - NONE
```

1V_B_SL_S5_EL.txt 4/17/2009

```
* start ; column 11-30 can be used to have your own text on the top of each page
*   5   10   15   20   25   30   35   40   45   50   55   60   65   70   75   80
*   V    V    V    V    V    V    V    V    V    V    V    V    V    V    V    V
00001  1 1     VEH: S5 - SUPERLOAD - 19 AXLE - SINGLE TRUCK
* code 1001
Cline Avenue - Striped Lanes - Single Box 41' Wide
* code 1002
    2         1
* code 1003
*   5   10   15   20   25   30   35   40   45   50   55   60   65   70   75   80
*   V    V    V    V    V    V    V    V    V    V    V    V    V    V    V    V
250.0      250.0      41.00    1.0       1.0       1.3
* code 1004
    1    0    2
* code 1005
  480    1
* code 1005a
* location traffic lanes
10.167
* maximum and minimum truck
7.917     29.083    10.000
* code 1007, linear loads
0.7350    0.441
40.2650   0.441
* code 1201
    6    5    3    1    2
* code 1202 coordinates
 0.0000   8.2500
 7.3125   8.2500
 7.3125   0.3333
33.6875   8.2500
33.6875   0.3333
41.0000   8.2500
* code 1203 - profile 1
    5    2    3    4
0.000     0.750
1.000     0.750
3.833     1.125
6.667     1.500
7.313     1.500
* code 1203 - profile 2
    7    2    3    4
0.000     1.500
0.646     1.500
4.646     0.750
13.188    0.750
21.729    0.750
25.729    1.500
26.375    1.500
* code 1203 - profile 3
    5    2    3    4
0.000     1.500
0.646     1.500
3.479     1.125
6.313     0.750
7.313     0.750
* code 1203 - profile 4
    5    2    3    4
0.000     0.667
0.646     0.667
13.188    0.667
25.729    0.667
26.375    0.667
* code 1203 - profile 5
    5    2    3    4
0.000     1.292
0.750     1.292
4.167     1.292
7.583     1.292
7.917     1.292
* code 1204 - assembling boxgirder
    1    2    1
    2    4    2
    4    6    3
    3    5    4
    2    3    5
    4    5    5
* code 1205 control code
    1    2   13    1    1    0    4   19     1.0       1.0
* code 1206 wheels/axle
       0.0
```

1V_B_SL_S5_EL.txt 4/17/2009

```
       1.5
       6.0
       7.5 0.833
* code 1207 definition axles
0.00      12.88
12.50     25.95
17.50     25.95
31.58     25.95
36.58     25.95
41.58     25.95
55.67     25.95
60.67     25.95
65.67     25.95
115.67    25.95
120.67    25.95
125.67    25.95
139.75    25.95
144.75    25.95
149.75    25.95
163.83    25.95
168.83    25.95
173.83    25.95
178.83    25.95
* code 1208 - accuracy
0.00001   0.00001   0.00001   .00001    .00001
* code 1209 number sections
   29
* code definition sections
   1A   1B   1C   1R   2L   2A   2B   2C   2R   3L   3A   3B   3C   3R   4L   4A
   4B   4C   4R   5L   5A   5B   5C   5R   6L   6A   6B   6C   6R
* code 1210 - density conrete
0.156
* code 1211 - extra forces selfweight

* code 1212 - surcharge
1.025
* code 1213 - Prestressing Layout - NONE
```

```
* start ; column 11-30 can be used to have your own text on the top of each page
*   5   10   15   20   25   30   35   40   45   50   55   60   65   70   75   80
*   V    V    V    V    V    V    V    V    V    V    V    V    V    V    V    V
00001  1 1     VEH: HL93- TRUCK
* code 1001
Cline Avenue - Striped Lanes - Single Box 41' Wide
* code 1002
    2         1
* code 1003
*   5   10   15   20   25   30   35   40   45   50   55   60   65   70   75   80
*   V    V    V    V    V    V    V    V    V    V    V    V    V    V    V    V
250.0      113.0      41.00    1.0       1.0       1.3
* code 1004
    2    0    2
* code 1005
   72
* code 1005a
* location traffic lanes
10.167    22.167
* maximum and minimum truck
7.917     29.083    10.000
* code 1007, linear loads
0.7350    0.441
40.2650   0.441
* code 1201
    6    5    3    1    2
* code 1202 coordinates
 0.0000   8.2500
 7.3125   8.2500
 7.3125   0.3333
33.6875   8.2500
33.6875   0.3333
41.0000   8.2500
* code 1203 - profile 1
    5    2    3    4
0.000     0.750
1.000     0.750
3.833     1.125
6.667     1.500
7.313     1.500
* code 1203 - profile 2
    7    2    3    4
0.000     1.500
0.646     1.500
4.646     0.750
13.188    0.750
21.729    0.750
25.729    1.500
26.375    1.500
* code 1203 - profile 3
    5    2    3    4
0.000     1.500
0.646     1.500
3.479     1.125
6.313     0.750
7.313     0.750
* code 1203 - profile 4
    5    2    3    4
0.000     0.667
0.646     0.667
13.188    0.667
25.729    0.667
26.375    0.667
* code 1203 - profile 5
    5    2    3    4
0.000     1.292
0.750     1.292
4.167     1.292
7.583     1.292
7.917     1.292
* code 1204 - assembling boxgirder
    1    2    1
    2    4    2
    4    6    3
    3    5    4
    2    3    5
    4    5    5
* code 1205 control code
    1    2   13    1    1    0    4    3     1.0       1.0
* code 1206 wheels/axle
       0.0
```

V_B_SL_HL93_truck_EL.txt 9/11/2009

```
       1.5
       6.0
       7.5 0.833
* code 1207 definition axles
0.0       0.1
14.0      0.4
28.0      0.4
* code 1208 - accuracy
0.00001   0.00001   0.00001   .00001    .00001
* code 1209 number sections
   29
* code definition sections
   1A   1B   1C   1R   2L   2A   2B   2C   2R   3L   3A   3B   3C   3R   4L   4A
   4B   4C   4R   5L   5A   5B   5C   5R   6L   6A   6B   6C   6R
* code 1210 - density conrete
0.156
* code 1211 - extra forces selfweight

* code 1212 - surcharge
1.025
* code 1213 - Prestressing Layout - NONE
```

V_B_SL_HL93_tandem_EL.txt 9/11/2009

```
* start ; column 11-30 can be used to have your own text on the top of each page
*   5   10   15   20   25   30   35   40   45   50   55   60   65   70   75   80
*   V    V    V    V    V    V    V    V    V    V    V    V    V    V    V    V
00001  1 1     VEH: HL93- TANDEM
* code 1001
Cline Avenue - Striped Lanes - Single Box 41' Wide
* code 1002
    2         1
* code 1003
*   5   10   15   20   25   30   35   40   45   50   55   60   65   70   75   80
*   V    V    V    V    V    V    V    V    V    V    V    V    V    V    V    V
250.0      113.0      41.00    1.0       1.0       1.3
* code 1004
    2    0    2
* code 1005
   50
* code 1005a
* location traffic lanes
10.167    22.167
* maximum and minimum truck
7.917     29.083    10.000
* code 1007, linear loads
0.7350    0.441
40.2650   0.441
* code 1201
    6    5    3    1    2
* code 1202 coordinates
 0.0000   8.2500
 7.3125   8.2500
 7.3125   0.3333
33.6875   8.2500
33.6875   0.3333
41.0000   8.2500
* code 1203 - profile 1
    5    2    3    4
0.000     0.750
1.000     0.750
3.833     1.125
6.667     1.500
7.313     1.500
* code 1203 - profile 2
    7    2    3    4
0.000     1.500
0.646     1.500
4.646     0.750
13.188    0.750
21.729    0.750
25.729    1.500
26.375    1.500
* code 1203 - profile 3
    5    2    3    4
0.000     1.500
0.646     1.500
3.479     1.125
6.313     0.750
7.313     0.750
* code 1203 - profile 4
    5    2    3    4
0.000     0.667
0.646     0.667
13.188    0.667
25.729    0.667
26.375    0.667
* code 1203 - profile 5
    5    2    3    4
0.000     1.292
0.750     1.292
4.167     1.292
7.583     1.292
7.917     1.292
* code 1204 - assembling boxgirder
    1    2    1
    2    4    2
    4    6    3
    3    5    4
    2    3    5
    4    5    5
* code 1205 control code
    1    2   13    1    1    0    4    2     1.0       1.0
* code 1206 wheels/axle
       0.0
```

V_B_SL_HL93_tandem_EL.txt 9/11/2009

```
       1.5
       6.0
       7.5 0.833
* code 1207 definition axles
0.0       0.5
4.0       0.5
* code 1208 - accuracy
0.00001   0.00001   0.00001   .00001    .00001
* code 1209 number sections
   29
* code definition sections
   1A   1B   1C   1R   2L   2A   2B   2C   2R   3L   3A   3B   3C   3R   4L   4A
   4B   4C   4R   5L   5A   5B   5C   5R   6L   6A   6B   6C   6R
* code 1210 - density conrete
0.156
* code 1211 - extra forces selfweight

* code 1212 - surcharge
1.025
* code 1213 - Prestressing Layout - NONE
```

```
* start ; column 11-30 can be used to have your own text on the top of each page
*   5   10   15   20   25   30   35   40   45   50   55   60   65   70   75   80
*   V    V    V    V    V    V    V    V    V    V    V    V    V    V    V    V
00001  1 1     VEH: R1 - TOLL ROAD LOADING No. 1
* code 1001
Cline Avenue - Striped Lanes - Single Box 41' Wide
* code 1002
    2         1
* code 1003
*   5   10   15   20   25   30   35   40   45   50   55   60   65   70   75   80
*   V    V    V    V    V    V    V    V    V    V    V    V    V    V    V    V
250.0      113.0      41.00    1.0       1.0       1.3
* code 1004
    2    0    2
* code 1005
   90
* code 1005a
* location traffic lanes
10.167    22.167
* maximum and minimum truck
7.917     29.083    10.000
* code 1007, linear loads
0.7350    0.441
40.2650   0.441
* code 1201
    6    5    3    1    2
* code 1202 coordinates
 0.0000   8.2500
 7.3125   8.2500
 7.3125   0.3333
33.6875   8.2500
33.6875   0.3333
41.0000   8.2500
* code 1203 - profile 1
    5    2    3    4
0.000     0.750
1.000     0.750
3.833     1.125
6.667     1.500
7.313     1.500
* code 1203 - profile 2
    7    2    3    4
0.000     1.500
0.646     1.500
4.646     0.750
13.188    0.750
21.729    0.750
25.729    1.500
26.375    1.500
* code 1203 - profile 3
    5    2    3    4
0.000     1.500
0.646     1.500
3.479     1.125
6.313     0.750
7.313     0.750
* code 1203 - profile 4
    5    2    3    4
0.000     0.667
0.646     0.667
13.188    0.667
25.729    0.667
26.375    0.667
* code 1203 - profile 5
    5    2    3    4
0.000     1.292
0.750     1.292
4.167     1.292
7.583     1.292
7.917     1.292
* code 1204 - assembling boxgirder
    1    2    1
    2    4    2
    4    6    3
    3    5    4
    2    3    5
    4    5    5
* code 1205 control code
    1    2   13    1    1    0    4    5     1.0       1.0
* code 1206 wheels/axle
       0.0
```

V_B_SL_R1_EL.txt 9/11/2009

```
       1.5
       6.0
       7.5 0.833
* code 1207 definition axles
0.00      18.00
10.00     18.00
14.00     18.00
24.00     18.00
28.00     18.00
* code 1208 - accuracy
0.00001   0.00001   0.00001   .00001    .00001
* code 1209 number sections
   29
* code definition sections
   1A   1B   1C   1R   2L   2A   2B   2C   2R   3L   3A   3B   3C   3R   4L   4A
   4B   4C   4R   5L   5A   5B   5C   5R   6L   6A   6B   6C   6R
* code 1210 - density conrete
0.156
* code 1211 - extra forces selfweight

* code 1212 - surcharge
1.025
* code 1213 - Prestressing Layout - NONE
```

```
* start ; column 11-30 can be used to have your own text on the top of each page
*   5   10   15   20   25   30   35   40   45   50   55   60   65   70   75   80
*   V    V    V    V    V    V    V    V    V    V    V    V    V    V    V    V
00001  1 1     VEH: R2 - TOLL ROAD LOADING No. 2
* code 1001
Cline Avenue - Striped Lanes - Single Box 41' Wide
* code 1002
    2         1
* code 1003
*   5   10   15   20   25   30   35   40   45   50   55   60   65   70   75   80
*   V    V    V    V    V    V    V    V    V    V    V    V    V    V    V    V
250.0      113.0      41.00    1.0       1.0       1.3
* code 1004
    2    0    2
* code 1005
   90
* code 1005a
* location traffic lanes
10.167    22.167
* maximum and minimum truck
7.917     29.083    10.000
* code 1007, linear loads
0.7350    0.441
40.2650   0.441
* code 1201
    6    5    3    1    2
* code 1202 coordinates
 0.0000   8.2500
 7.3125   8.2500
 7.3125   0.3333
33.6875   8.2500
33.6875   0.3333
41.0000   8.2500
* code 1203 - profile 1
    5    2    3    4
0.000     0.750
1.000     0.750
3.833     1.125
6.667     1.500
7.313     1.500
* code 1203 - profile 2
    7    2    3    4
0.000     1.500
0.646     1.500
4.646     0.750
13.188    0.750
21.729    0.750
25.729    1.500
26.375    1.500
* code 1203 - profile 3
    5    2    3    4
0.000     1.500
0.646     1.500
3.479     1.125
6.313     0.750
7.313     0.750
* code 1203 - profile 4
    5    2    3    4
0.000     0.667
0.646     0.667
13.188    0.667
25.729    0.667
26.375    0.667
* code 1203 - profile 5
    5    2    3    4
0.000     1.292
0.750     1.292
4.167     1.292
7.583     1.292
7.917     1.292
* code 1204 - assembling boxgirder
    1    2    1
    2    4    2
    4    6    3
    3    5    4
    2    3    5
    4    5    5
* code 1205 control code
    1    2   13    1    1    0    4    4     1.0       1.0
* code 1206 wheels/axle
       0.0
```

V_B_SL_R2_EL.txt 9/11/2009

```
       1.5
       6.0
       7.5 0.833
* code 1207 definition axles
0.00      22.50
14.00     22.50
23.00     22.50
37.00     22.50
* code 1208 - accuracy
0.00001   0.00001   0.00001   .00001    .00001
* code 1209 number sections
   29
* code definition sections
   1A   1B   1C   1R   2L   2A   2B   2C   2R   3L   3A   3B   3C   3R   4L   4A
   4B   4C   4R   5L   5A   5B   5C   5R   6L   6A   6B   6C   6R
* code 1210 - density conrete
0.156
* code 1211 - extra forces selfweight

* code 1212 - surcharge
1.025
* code 1213 - Prestressing Layout - NONE
```

```
* start ; column 11-30 can be used to have your own text on the top of each page
*   5   10   15   20   25   30   35   40   45   50   55   60   65   70   75   80
*   V    V    V    V    V    V    V    V    V    V    V    V    V    V    V    V
00001  1 1     VEH: R3 - TOLL ROAD LOADING No. 3
* code 1001
Cline Avenue - Striped Lanes - Single Box 41' Wide
* code 1002
    2         1
* code 1003
*   5   10   15   20   25   30   35   40   45   50   55   60   65   70   75   80
*   V    V    V    V    V    V    V    V    V    V    V    V    V    V    V    V
250.0      113.0      41.00    1.0       1.0       1.3
* code 1004
    2    0    2
* code 1005
  126
* code 1005a
* location traffic lanes
10.167    22.167
* maximum and minimum truck
7.917     29.083    10.000
* code 1007, linear loads
0.7350    0.441
40.2650   0.441
* code 1201
    6    5    3    1    2
* code 1202 coordinates
 0.0000   8.2500
 7.3125   8.2500
 7.3125   0.3333
33.6875   8.2500
33.6875   0.3333
41.0000   8.2500
* code 1203 - profile 1
    5    2    3    4
0.000     0.750
1.000     0.750
3.833     1.125
6.667     1.500
7.313     1.500
* code 1203 - profile 2
    7    2    3    4
0.000     1.500
0.646     1.500
4.646     0.750
13.188    0.750
21.729    0.750
25.729    1.500
26.375    1.500
* code 1203 - profile 3
    5    2    3    4
0.000     1.500
0.646     1.500
3.479     1.125
6.313     0.750
7.313     0.750
* code 1203 - profile 4
    5    2    3    4
0.000     0.667
0.646     0.667
13.188    0.667
25.729    0.667
26.375    0.667
* code 1203 - profile 5
    5    2    3    4
0.000     1.292
0.750     1.292
4.167     1.292
7.583     1.292
7.917     1.292
* code 1204 - assembling boxgirder
    1    2    1
    2    4    2
    4    6    3
    3    5    4
    2    3    5
    4    5    5
* code 1205 control code
    1    2   13    1    1    0    4    7     1.0       1.0
* code 1206 wheels/axle
       0.0
```

V_B_SL_R3_EL.txt 9/11/2009

```
       1.5
       6.0
       7.5 0.833
* code 1207 definition axles
0.00      18.00
10.00     18.00
14.00     18.00
40.00     18.00
44.00     18.00
56.00     18.00
76.00     18.00
* code 1208 - accuracy
0.00001   0.00001   0.00001   .00001    .00001
* code 1209 number sections
   29
* code definition sections
   1A   1B   1C   1R   2L   2A   2B   2C   2R   3L   3A   3B   3C   3R   4L   4A
   4B   4C   4R   5L   5A   5B   5C   5R   6L   6A   6B   6C   6R
* code 1210 - density conrete
0.156
* code 1211 - extra forces selfweight

* code 1212 - surcharge
1.025
* code 1213 - Prestressing Layout - NONE
```

```
* start ; column 11-30 can be used to have your own text on the top of each page
*   5   10   15   20   25   30   35   40   45   50   55   60   65   70   75   80
*   V    V    V    V    V    V    V    V    V    V    V    V    V    V    V    V
00001  1 1     VEH: R4 - MICHIGAN TRUCK TRAIN No.5
* code 1001
Cline Avenue - Striped Lanes - Single Box 41' Wide
* code 1002
    2         1
* code 1003
*   5   10   15   20   25   30   35   40   45   50   55   60   65   70   75   80
*   V    V    V    V    V    V    V    V    V    V    V    V    V    V    V    V
250.0      113.0      41.00    1.0       1.0       1.3
* code 1004
    2    0    2
* code 1005
  134
* code 1005a
* location traffic lanes
10.167    22.167
* maximum and minimum truck
7.917     29.083    10.000
* code 1007, linear loads
0.7350    0.441
40.2650   0.441
* code 1201
    6    5    3    1    2
* code 1202 coordinates
 0.0000   8.2500
 7.3125   8.2500
 7.3125   0.3333
33.6875   8.2500
33.6875   0.3333
41.0000   8.2500
* code 1203 - profile 1
    5    2    3    4
0.000     0.750
1.000     0.750
3.833     1.125
6.667     1.500
7.313     1.500
* code 1203 - profile 2
    7    2    3    4
0.000     1.500
0.646     1.500
4.646     0.750
13.188    0.750
21.729    0.750
25.729    1.500
26.375    1.500
* code 1203 - profile 3
    5    2    3    4
0.000     1.500
0.646     1.500
3.479     1.125
6.313     0.750
7.313     0.750
* code 1203 - profile 4
    5    2    3    4
0.000     0.667
0.646     0.667
13.188    0.667
25.729    0.667
26.375    0.667
* code 1203 - profile 5
    5    2    3    4
0.000     1.292
0.750     1.292
4.167     1.292
7.583     1.292
7.917     1.292
* code 1204 - assembling boxgirder
    1    2    1
    2    4    2
    4    6    3
    3    5    4
    2    3    5
    4    5    5
* code 1205 control code
    1    2   13    1    1    0    4    8     1.0       1.0
* code 1206 wheels/axle
       0.0
```

V_B_SL_R4_EL.txt 9/11/2009

```
       1.5
       6.0
       7.5 0.833
* code 1207 definition axles
0.00      12.00
9.00      16.00
12.50     16.00
21.50     18.00
30.50     18.00
39.50     18.00
48.50     18.00
57.50     18.00
* code 1208 - accuracy
0.00001   0.00001   0.00001   .00001    .00001
* code 1209 number sections
   29
* code definition sections
   1A   1B   1C   1R   2L   2A   2B   2C   2R   3L   3A   3B   3C   3R   4L   4A
   4B   4C   4R   5L   5A   5B   5C   5R   6L   6A   6B   6C   6R
* code 1210 - density conrete
0.156
* code 1211 - extra forces selfweight

* code 1212 - surcharge
1.025
* code 1213 - Prestressing Layout - NONE
```

```
* start ; column 11-30 can be used to have your own text on the top of each page
*   5   10   15   20   25   30   35   40   45   50   55   60   65   70   75   80
*   V    V    V    V    V    V    V    V    V    V    V    V    V    V    V    V
00001  1 1     VEH: R5 - MICHIGAN TRUCK TRAIN No. 8
* code 1001
Cline Avenue - Striped Lanes - Single Box 41' Wide
* code 1002
    2         1
* code 1003
*   5   10   15   20   25   30   35   40   45   50   55   60   65   70   75   80
*   V    V    V    V    V    V    V    V    V    V    V    V    V    V    V    V
250.0      113.0      41.00    1.0       1.0       1.3
* code 1004
    2    0    2
* code 1005
* Vehicle weight is 134.2 Kips, rounded to 135
  135
* code 1005a
* location traffic lanes
10.167    22.167
* maximum and minimum truck
7.917     29.083    10.000
* code 1007, linear loads
0.7350    0.441
40.2650   0.441
* code 1201
    6    5    3    1    2
* code 1202 coordinates
 0.0000   8.2500
 7.3125   8.2500
 7.3125   0.3333
33.6875   8.2500
33.6875   0.3333
41.0000   8.2500
* code 1203 - profile 1
    5    2    3    4
0.000     0.750
1.000     0.750
3.833     1.125
6.667     1.500
7.313     1.500
* code 1203 - profile 2
    7    2    3    4
0.000     1.500
0.646     1.500
4.646     0.750
13.188    0.750
21.729    0.750
25.729    1.500
26.375    1.500
* code 1203 - profile 3
    5    2    3    4
0.000     1.500
0.646     1.500
3.479     1.125
6.313     0.750
7.313     0.750
* code 1203 - profile 4
    5    2    3    4
0.000     0.667
0.646     0.667
13.188    0.667
25.729    0.667
26.375    0.667
* code 1203 - profile 5
    5    2    3    4
0.000     1.292
0.750     1.292
4.167     1.292
7.583     1.292
7.917     1.292
* code 1204 - assembling boxgirder
    1    2    1
    2    4    2
    4    6    3
    3    5    4
    2    3    5
    4    5    5
* code 1205 control code
    1    2   13    1    1    0    4   11     1.0       1.0
* code 1206 wheels/axle
```

```
       0.0
       1.5
       6.0
       7.5 0.833
* code 1207 definition axles
0.00      12.00
9.00      13.40
12.50     13.40
21.50     10.90
25.00     10.90
28.50     10.90
32.00     10.90
35.50     10.90
39.00     10.90
48.00     15.00
57.00     15.00
* code 1208 - accuracy
0.00001   0.00001   0.00001   .00001    .00001
* code 1209 number sections
   29
* code definition sections
   1A   1B   1C   1R   2L   2A   2B   2C   2R   3L   3A   3B   3C   3R   4L   4A
   4B   4C   4R   5L   5A   5B   5C   5R   6L   6A   6B   6C   6R
* code 1210 - density conrete
0.156
* code 1211 - extra forces selfweight

* code 1212 - surcharge
1.025
* code 1213 - Prestressing Layout - NONE
```

V_B_SL_S1_EL.txt 9/11/2009

```
* start ; column 11-30 can be used to have your own text on the top of each page
*   5   10   15   20   25   30   35   40   45   50   55   60   65   70   75   80
*   V    V    V    V    V    V    V    V    V    V    V    V    V    V    V    V
00001  1 1     VEH: S1 - SPECIAL TRUCK 11 AXLE
* code 1001
Cline Avenue - Striped Lanes - Single Box 41' Wide
* code 1002
    2         1
* code 1003
*   5   10   15   20   25   30   35   40   45   50   55   60   65   70   75   80
*   V    V    V    V    V    V    V    V    V    V    V    V    V    V    V    V
250.0      113.0      41.00    1.0       1.0       1.3
* code 1004
    2    0    2
* code 1005
  258
* code 1005a
* location traffic lanes
10.167    22.167
* maximum and minimum truck
7.917     29.083    10.000
* code 1007, linear loads
0.7350    0.441
40.2650   0.441
* code 1201
    6    5    3    1    2
* code 1202 coordinates
 0.0000   8.2500
 7.3125   8.2500
 7.3125   0.3333
33.6875   8.2500
33.6875   0.3333
41.0000   8.2500
* code 1203 - profile 1
    5    2    3    4
0.000     0.750
1.000     0.750
3.833     1.125
6.667     1.500
7.313     1.500
* code 1203 - profile 2
    7    2    3    4
0.000     1.500
0.646     1.500
4.646     0.750
13.188    0.750
21.729    0.750
25.729    1.500
26.375    1.500
* code 1203 - profile 3
    5    2    3    4
0.000     1.500
0.646     1.500
3.479     1.125
6.313     0.750
7.313     0.750
* code 1203 - profile 4
    5    2    3    4
0.000     0.667
0.646     0.667
13.188    0.667
25.729    0.667
26.375    0.667
* code 1203 - profile 5
    5    2    3    4
0.000     1.292
0.750     1.292
4.167     1.292
7.583     1.292
7.917     1.292
* code 1204 - assembling boxgirder
    1    2    1
    2    4    2
    4    6    3
    3    5    4
    2    3    5
    4    5    5
* code 1205 control code
    1    2   13    1    1    0    4   11     1.0       1.0
* code 1206 wheels/axle
       0.0
```

V_B_SL_S1_EL.txt 9/11/2009

```
       1.5
       6.0
       7.5 0.833
* code 1207 definition axles
0.00      12.00
11.50     24.60
16.67     24.60
21.67     24.60
34.83     24.60
39.33     24.60
89.92     24.60
94.42     24.60
98.92     24.60
112.50     24.60
117.00     24.60
* code 1208 - accuracy
0.00001   0.00001   0.00001   .00001    .00001
* code 1209 number sections
   29
* code definition sections
   1A   1B   1C   1R   2L   2A   2B   2C   2R   3L   3A   3B   3C   3R   4L   4A
   4B   4C   4R   5L   5A   5B   5C   5R   6L   6A   6B   6C   6R
* code 1210 - density conrete
0.156
* code 1211 - extra forces selfweight

* code 1212 - surcharge
1.025
* code 1213 - Prestressing Layout - NONE
```

V_B_SL_S2_EL.txt 9/11/2009

```
* start ; column 11-30 can be used to have your own text on the top of each page
*   5   10   15   20   25   30   35   40   45   50   55   60   65   70   75   80
*   V    V    V    V    V    V    V    V    V    V    V    V    V    V    V    V
00001  1 1     VEH: S2 - SPECIAL TRUCK - 13 AXLE
* code 1001
Cline Avenue - Striped Lanes - Single Box 41' Wide
* code 1002
    2         1
* code 1003
*   5   10   15   20   25   30   35   40   45   50   55   60   65   70   75   80
*   V    V    V    V    V    V    V    V    V    V    V    V    V    V    V    V
250.0      113.0      41.00    1.0       1.0       1.3
* code 1004
    2    0    2
* code 1005
  267
* code 1005a
* location traffic lanes
10.167    22.167
* maximum and minimum truck
7.917     29.083    10.000
* code 1007, linear loads
0.7350    0.441
40.2650   0.441
* code 1201
    6    5    3    1    2
* code 1202 coordinates
 0.0000   8.2500
 7.3125   8.2500
 7.3125   0.3333
33.6875   8.2500
33.6875   0.3333
41.0000   8.2500
* code 1203 - profile 1
    5    2    3    4
0.000     0.750
1.000     0.750
3.833     1.125
6.667     1.500
7.313     1.500
* code 1203 - profile 2
    7    2    3    4
0.000     1.500
0.646     1.500
4.646     0.750
13.188    0.750
21.729    0.750
25.729    1.500
26.375    1.500
* code 1203 - profile 3
    5    2    3    4
0.000     1.500
0.646     1.500
3.479     1.125
6.313     0.750
7.313     0.750
* code 1203 - profile 4
    5    2    3    4
0.000     0.667
0.646     0.667
13.188    0.667
25.729    0.667
26.375    0.667
* code 1203 - profile 5
    5    2    3    4
0.000     1.292
0.750     1.292
4.167     1.292
7.583     1.292
7.917     1.292
* code 1204 - assembling boxgirder
    1    2    1
    2    4    2
    4    6    3
    3    5    4
    2    3    5
    4    5    5
* code 1205 control code
    1    2   13    1    1    0    4   13     1.0       1.0
* code 1206 wheels/axle
       0.0
```

V_B_SL_S2_EL.txt 9/11/2009

```
       1.5
       6.0
       7.5 0.833
* code 1207 definition axles
0.00      15.00
16.50     21.00
21.00     21.00
25.50     21.00
39.50     21.00
44.00     21.00
48.50     21.00
96.50     21.00
101.00    21.00
105.50    21.00
121.00    21.00
125.50    21.00
130.00    21.00
* code 1208 - accuracy
0.00001   0.00001   0.00001   .00001    .00001
* code 1209 number sections
   29
* code definition sections
   1A   1B   1C   1R   2L   2A   2B   2C   2R   3L   3A   3B   3C   3R   4L   4A
   4B   4C   4R   5L   5A   5B   5C   5R   6L   6A   6B   6C   6R
* code 1210 - density conrete
0.156
* code 1211 - extra forces selfweight

* code 1212 - surcharge
1.025
* code 1213 - Prestressing Layout - NONE
```

V_B_SL_S3_EL.txt 9/11/2009

```
* start ; column 11-30 can be used to have your own text on the top of each page
*   5   10   15   20   25   30   35   40   45   50   55   60   65   70   75   80
*   V    V    V    V    V    V    V    V    V    V    V    V    V    V    V    V
00001  1 1     VEH: S3 - SPECIAL TRUCK - 14 AXLE
* code 1001
Cline Avenue - Striped Lanes - Single Box 41' Wide
* code 1002
    2         1
* code 1003
*   5   10   15   20   25   30   35   40   45   50   55   60   65   70   75   80
*   V    V    V    V    V    V    V    V    V    V    V    V    V    V    V    V
250.0      113.0      41.00    1.0       1.0       1.3
* code 1004
    2    0    2
* code 1005
  350
* code 1005a
* location traffic lanes
10.167    22.167
* maximum and minimum truck
7.917     29.083    10.000
* code 1007, linear loads
0.7350    0.441
40.2650   0.441
* code 1201
    6    5    3    1    2
* code 1202 coordinates
 0.0000   8.2500
 7.3125   8.2500
 7.3125   0.3333
33.6875   8.2500
33.6875   0.3333
41.0000   8.2500
* code 1203 - profile 1
    5    2    3    4
0.000     0.750
1.000     0.750
3.833     1.125
6.667     1.500
7.313     1.500
* code 1203 - profile 2
    7    2    3    4
0.000     1.500
0.646     1.500
4.646     0.750
13.188    0.750
21.729    0.750
25.729    1.500
26.375    1.500
* code 1203 - profile 3
    5    2    3    4
0.000     1.500
0.646     1.500
3.479     1.125
6.313     0.750
7.313     0.750
* code 1203 - profile 4
    5    2    3    4
0.000     0.667
0.646     0.667
13.188    0.667
25.729    0.667
26.375    0.667
* code 1203 - profile 5
    5    2    3    4
0.000     1.292
0.750     1.292
4.167     1.292
7.583     1.292
7.917     1.292
* code 1204 - assembling boxgirder
    1    2    1
    2    4    2
    4    6    3
    3    5    4
    2    3    5
    4    5    5
* code 1205 control code
    1    2   13    1    1    0    4   14     1.0       1.0
* code 1206 wheels/axle
       0.0
```

V_B_SL_S3_EL.txt 9/11/2009

```
       1.5
       6.0
       7.5 0.833
* code 1207 definition axles
0.00      13.00
14.50     25.00
19.00     25.00
23.50     25.00
50.50     23.50
54.67     23.50
58.83     23.50
102.83    23.50
107.33    28.00
111.83    28.00
116.33    28.00
132.17    28.00
136.67    28.00
141.17    28.00
* code 1208 - accuracy
0.00001   0.00001   0.00001   .00001    .00001
* code 1209 number sections
   29
* code definition sections
   1A   1B   1C   1R   2L   2A   2B   2C   2R   3L   3A   3B   3C   3R   4L   4A
   4B   4C   4R   5L   5A   5B   5C   5R   6L   6A   6B   6C   6R
* code 1210 - density conrete
0.156
* code 1211 - extra forces selfweight

* code 1212 - surcharge
1.025
* code 1213 - Prestressing Layout - NONE
```

```
* start ; column 11-30 can be used to have your own text on the top of each page
*   5   10   15   20   25   30   35   40   45   50   55   60   65   70   75   80
*   V    V    V    V    V    V    V    V    V    V    V    V    V    V    V    V
00001  1 1     VEH: S4 - SUPER LOAD -19 AXLES
* code 1001
Cline Avenue - Striped Lanes - Single Box 41' Wide
* code 1002
    2         1
* code 1003
*   5   10   15   20   25   30   35   40   45   50   55   60   65   70   75   80
*   V    V    V    V    V    V    V    V    V    V    V    V    V    V    V    V
250.0      113.0      41.00    1.0       1.0       1.3
* code 1004
    2    0    2
* code 1005
  305
* code 1005a
* location traffic lanes
10.167    22.167
* maximum and minimum truck
7.917     29.083    10.000
* code 1007, linear loads
0.7350    0.441
40.2650   0.441
* code 1201
    6    5    3    1    2
* code 1202 coordinates
 0.0000   8.2500
 7.3125   8.2500
 7.3125   0.3333
33.6875   8.2500
33.6875   0.3333
41.0000   8.2500
* code 1203 - profile 1
    5    2    3    4
0.000     0.750
1.000     0.750
3.833     1.125
6.667     1.500
7.313     1.500
* code 1203 - profile 2
    7    2    3    4
0.000     1.500
0.646     1.500
4.646     0.750
13.188    0.750
21.729    0.750
25.729    1.500
26.375    1.500
* code 1203 - profile 3
    5    2    3    4
0.000     1.500
0.646     1.500
3.479     1.125
6.313     0.750
7.313     0.750
* code 1203 - profile 4
    5    2    3    4
0.000     0.667
0.646     0.667
13.188    0.667
25.729    0.667
26.375    0.667
* code 1203 - profile 5
    5    2    3    4
0.000     1.292
0.750     1.292
4.167     1.292
7.583     1.292
7.917     1.292
* code 1204 - assembling boxgirder
    1    2    1
    2    4    2
    4    6    3
    3    5    4
    2    3    5
    4    5    5
* code 1205 control code
    1    2   13    1    1    0    4   19     1.0       1.0
* code 1206 wheels/axle
       0.0
```

V_B_SL_S4_EL.txt 9/11/2009

```
       1.5
       6.0
       7.5 0.833
* code 1207 definition axles
0.00      13.00
13.50     16.48
17.83     16.48
31.33     16.48
35.42     15.99
39.50     15.99
45.50     15.99
49.58     16.37
53.67     16.37
103.58    16.37
107.67    16.64
114.17    16.64
118.25    15.15
122.33    15.15
126.42    15.15
135.92    15.15
140.00    17.20
144.08    17.20
148.17    17.20
* code 1208 - accuracy
0.00001   0.00001   0.00001   .00001    .00001
* code 1209 number sections
   29
* code definition sections
   1A   1B   1C   1R   2L   2A   2B   2C   2R   3L   3A   3B   3C   3R   4L   4A
   4B   4C   4R   5L   5A   5B   5C   5R   6L   6A   6B   6C   6R
* code 1210 - density conrete
0.156
* code 1211 - extra forces selfweight

* code 1212 - surcharge
1.025
* code 1213 - Prestressing Layout - NONE
```

V_B_SL_S5_EL.txt 9/11/2009

```
* start ; column 11-30 can be used to have your own text on the top of each page
*   5   10   15   20   25   30   35   40   45   50   55   60   65   70   75   80
*   V    V    V    V    V    V    V    V    V    V    V    V    V    V    V    V
00001  1 1     VEH: S5 - SUPERLOAD - 19 AXLE
* code 1001
Cline Avenue - Striped Lanes - Single Box 41' Wide
* code 1002
    2         1
* code 1003
*   5   10   15   20   25   30   35   40   45   50   55   60   65   70   75   80
*   V    V    V    V    V    V    V    V    V    V    V    V    V    V    V    V
250.0      113.0      41.00    1.0       1.0       1.3
* code 1004
    2    0    2
* code 1005
  480
* code 1005a
* location traffic lanes
10.167    22.167
* maximum and minimum truck
7.917     29.083    10.000
* code 1007, linear loads
0.7350    0.441
40.2650   0.441
* code 1201
    6    5    3    1    2
* code 1202 coordinates
 0.0000   8.2500
 7.3125   8.2500
 7.3125   0.3333
33.6875   8.2500
33.6875   0.3333
41.0000   8.2500
* code 1203 - profile 1
    5    2    3    4
0.000     0.750
1.000     0.750
3.833     1.125
6.667     1.500
7.313     1.500
* code 1203 - profile 2
    7    2    3    4
0.000     1.500
0.646     1.500
4.646     0.750
13.188    0.750
21.729    0.750
25.729    1.500
26.375    1.500
* code 1203 - profile 3
    5    2    3    4
0.000     1.500
0.646     1.500
3.479     1.125
6.313     0.750
7.313     0.750
* code 1203 - profile 4
    5    2    3    4
0.000     0.667
0.646     0.667
13.188    0.667
25.729    0.667
26.375    0.667
* code 1203 - profile 5
    5    2    3    4
0.000     1.292
0.750     1.292
4.167     1.292
7.583     1.292
7.917     1.292
* code 1204 - assembling boxgirder
    1    2    1
    2    4    2
    4    6    3
    3    5    4
    2    3    5
    4    5    5
* code 1205 control code
    1    2   13    1    1    0    4   19     1.0       1.0
* code 1206 wheels/axle
       0.0
```

V_B_SL_S5_EL.txt 9/11/2009

```
       1.5
       6.0
       7.5 0.833
* code 1207 definition axles
0.00      12.88
12.50     25.95
17.50     25.95
31.58     25.95
36.58     25.95
41.58     25.95
55.67     25.95
60.67     25.95
65.67     25.95
115.67    25.95
120.67    25.95
125.67    25.95
139.75    25.95
144.75    25.95
149.75    25.95
163.83    25.95
168.83    25.95
173.83    25.95
178.83    25.95
* code 1208 - accuracy
0.00001   0.00001   0.00001   .00001    .00001
* code 1209 number sections
   29
* code definition sections
   1A   1B   1C   1R   2L   2A   2B   2C   2R   3L   3A   3B   3C   3R   4L   4A
   4B   4C   4R   5L   5A   5B   5C   5R   6L   6A   6B   6C   6R
* code 1210 - density conrete
0.156
* code 1211 - extra forces selfweight

* code 1212 - surcharge
1.025
* code 1213 - Prestressing Layout - NONE
```

4.10.3 Brug Output AASHTO Lanes (Summary)

VEH: HL93- TRUCK - S BRUG(5.75.44) page 39
date 11/09/2009; time 13:29:03
Cline Avenue - Load Rating - Single Box 41' Wide

Summary of the results (Maximum)

Section	Deadload Moment	Deadload Ax.Frc	P.T. Moment	P.T. Ax.Frc	Live load Moment	Live load Ax.Frc
1 a	-0.18	0.02	0.00	0.00	0.27	0.00
1 b	-2.51	0.27	0.00	0.00	1.55	0.08
1 c	-6.44	0.92	0.00	0.00	0.04	0.05
1 right	-7.60	1.13	0.00	0.00	0.05	0.07
2 left	-9.55	0.30	0.00	0.00	-2.64	-0.43
2 a	-8.19	-0.02	0.00	0.00	-0.27	1.28
2 b	-1.77	-1.53	0.00	0.00	4.51	-0.12
2 c	3.39	-2.73	0.00	0.00	8.77	-1.16
2 right	-9.55	0.30	0.00	0.00	-2.64	-0.43
3 left	-7.60	1.13	0.00	0.00	0.05	0.07
3 a	-6.44	0.92	0.00	0.00	0.04	0.05
3 b	-2.51	0.27	0.00	0.00	1.55	0.08
3 c	-0.18	0.02	0.00	0.00	0.27	0.00
3 right	0.00	0.00	0.00	0.00	0.00	0.00
4 left	-4.59	0.83	0.00	0.00	1.11	-0.75
4 a	-3.73	1.26	0.00	0.00	1.05	-0.56
4 b	4.43	5.39	0.00	0.00	0.01	0.67
4 c	-3.73	1.26	0.00	0.00	1.05	-0.56
4 right	-4.59	0.83	0.00	0.00	1.11	-0.75
5 top	1.94	-4.04	0.00	0.00	8.48	-2.85
5 a	1.32	-3.52	0.00	0.00	7.36	-2.51
5 b	-1.50	-1.01	0.00	0.00	3.56	-1.05
5 c	-4.32	1.20	0.00	0.00	1.00	-0.21
5 bottom	-4.59	1.37	0.00	0.00	1.11	-0.10
6 top	-1.94	-4.04	0.00	0.00	4.58	-8.37
6 a	-1.32	-3.52	0.00	0.00	3.97	-7.00
6 b	1.50	-1.01	0.00	0.00	1.45	-2.44
6 c	4.32	1.20	0.00	0.00	0.89	0.07
6 bottom	4.59	1.37	0.00	0.00	1.08	0.09

Summary of the results (Minimum)

Section	Deadload Moment	Deadload Ax.Frc	P.T. Moment	P.T. Ax.Frc	Live load Moment	Live load Ax.Frc
1 a	-0.18	0.02	0.00	0.00	-0.03	0.01
1 b	-2.51	0.27	0.00	0.00	0.01	0.01
1 c	-6.44	0.92	0.00	0.00	-5.97	0.59
1 right	-7.60	1.13	0.00	0.00	-7.95	0.99
2 left	-9.55	0.30	0.00	0.00	-10.40	-0.35
2 a	-8.19	-0.02	0.00	0.00	-9.00	-0.58
2 b	-1.77	-1.53	0.00	0.00	-3.91	-1.02
2 c	3.39	-2.73	0.00	0.00	0.01	-0.18
2 right	-9.55	0.30	0.00	0.00	-10.40	-0.35
3 left	-7.60	1.13	0.00	0.00	-7.95	0.99
3 a	-6.44	0.92	0.00	0.00	-5.97	0.59
3 b	-2.51	0.27	0.00	0.00	0.01	0.01
3 c	-0.18	0.02	0.00	0.00	-0.03	0.01
3 right	0.00	0.00	0.00	0.00	0.00	0.00
4 left	-4.59	0.83	0.00	0.00	-1.08	0.57

VEH: HL93- TRUCK - S BRUG(5.75.44) page 40
date 11/09/2009; time 13:29:03
Cline Avenue - Load Rating - Single Box 41' Wide

Summary of the results (Minimum)

Section	Deadload Moment	Deadload Ax.Frc	P.T. Moment	P.T. Ax.Frc	Live load Moment	Live load Ax.Frc
4 a	-3.73	1.26	0.00	0.00	-1.03	0.60
4 b	4.43	5.39	0.00	0.00	-0.07	1.69
4 c	-3.73	1.26	0.00	0.00	-1.03	0.60
4 right	-4.59	0.83	0.00	0.00	-1.08	0.57
5 top	1.94	-4.04	0.00	0.00	-4.58	-8.37
5 a	1.32	-3.52	0.00	0.00	-3.97	-7.00
5 b	-1.50	-1.01	0.00	0.00	-1.45	-2.44
5 c	-4.32	1.20	0.00	0.00	-0.89	0.07
5 bottom	-4.59	1.37	0.00	0.00	-1.08	0.09
6 top	-1.94	-4.04	0.00	0.00	-8.48	-2.85
6 a	-1.32	-3.52	0.00	0.00	-7.36	-2.51
6 b	1.50	-1.01	0.00	0.00	-3.56	-1.05
6 c	4.32	1.20	0.00	0.00	-1.00	-0.21
6 bottom	4.59	1.37	0.00	0.00	-1.11	-0.10

VEH: HL93- TANDEM - BRUG(5.75.44) page 39
date 11/09/2009; time 13:29:02
Cline Avenue - Load Rating - Single Box 41' Wide

Summary of the results (Maximum)

Section	Deadload Moment	Deadload Ax.Frc	P.T. Moment	P.T. Ax.Frc	Live load Moment	Live load Ax.Frc
1 a	-0.18	0.02	0.00	0.00	0.21	0.01
1 b	-2.51	0.27	0.00	0.00	0.95	0.15
1 c	-6.44	0.92	0.00	0.00	0.01	0.03
1 right	-7.60	1.13	0.00	0.00	0.02	0.04
2 left	-9.55	0.30	0.00	0.00	-1.94	-0.32
2 a	-8.19	-0.02	0.00	0.00	-1.71	1.28
2 b	-1.77	-1.53	0.00	0.00	3.45	-0.12
2 c	3.39	-2.73	0.00	0.00	8.11	-1.00
2 right	-9.55	0.30	0.00	0.00	-1.94	-0.32
3 left	-7.60	1.13	0.00	0.00	0.02	0.04
3 a	-6.44	0.92	0.00	0.00	0.01	0.03
3 b	-2.51	0.27	0.00	0.00	0.95	0.15
3 c	-0.18	0.02	0.00	0.00	0.21	0.01
3 right	0.00	0.00	0.00	0.00	0.00	0.00
4 left	-4.59	0.83	0.00	0.00	0.84	-0.64
4 a	-3.73	1.26	0.00	0.00	0.78	-0.43
4 b	4.43	5.39	0.00	0.00	0.00	0.65
4 c	-3.73	1.26	0.00	0.00	0.78	-0.43
4 right	-4.59	0.83	0.00	0.00	0.84	-0.64
5 top	1.94	-4.04	0.00	0.00	9.06	-3.71
5 a	1.32	-3.52	0.00	0.00	7.76	-3.31
5 b	-1.50	-1.01	0.00	0.00	3.50	-1.44
5 c	-4.32	1.20	0.00	0.00	0.72	-0.19
5 bottom	-4.59	1.37	0.00	0.00	0.84	-0.08
6 top	-1.94	-4.04	0.00	0.00	4.08	-7.09
6 a	-1.32	-3.52	0.00	0.00	3.50	-6.17
6 b	1.50	-1.01	0.00	0.00	1.26	-2.56
6 c	4.32	1.20	0.00	0.00	0.64	0.05
6 bottom	4.59	1.37	0.00	0.00	0.77	0.06

Summary of the results (Minimum)

Section	Deadload Moment	Deadload Ax.Frc	P.T. Moment	P.T. Ax.Frc	Live load Moment	Live load Ax.Frc
1 a	-0.18	0.02	0.00	0.00	-0.05	0.01
1 b	-2.51	0.27	0.00	0.00	0.01	0.01
1 c	-6.44	0.92	0.00	0.00	-6.43	0.67
1 right	-7.60	1.13	0.00	0.00	-8.31	0.97
2 left	-9.55	0.30	0.00	0.00	-11.96	-0.27
2 a	-8.19	-0.02	0.00	0.00	-10.32	-0.49
2 b	-1.77	-1.53	0.00	0.00	-4.18	-0.87
2 c	3.39	-2.73	0.00	0.00	0.02	-0.16
2 right	-9.55	0.30	0.00	0.00	-11.96	-0.27
3 left	-7.60	1.13	0.00	0.00	-8.31	0.97
3 a	-6.44	0.92	0.00	0.00	-6.43	0.67
3 b	-2.51	0.27	0.00	0.00	0.01	0.01
3 c	-0.18	0.02	0.00	0.00	-0.05	0.01
3 right	0.00	0.00	0.00	0.00	0.00	0.00
4 left	-4.59	0.83	0.00	0.00	-0.77	0.42

VEH: HL93- TANDEM - BRUG(5.75.44) page 40
date 11/09/2009; time 13:29:02
Cline Avenue - Load Rating - Single Box 41' Wide

Summary of the results (Minimum)

Section	Deadload Moment	Deadload Ax.Frc	P.T. Moment	P.T. Ax.Frc	Live load Moment	Live load Ax.Frc
4 a	-3.73	1.26	0.00	0.00	-0.73	0.45
4 b	4.43	5.39	0.00	0.00	-0.06	1.56
4 c	-3.73	1.26	0.00	0.00	-0.73	0.45
4 right	-4.59	0.83	0.00	0.00	-0.77	0.42
5 top	1.94	-4.04	0.00	0.00	-4.08	-7.09
5 a	1.32	-3.52	0.00	0.00	-3.50	-6.17
5 b	-1.50	-1.01	0.00	0.00	-1.27	-2.56
5 c	-4.32	1.20	0.00	0.00	-0.64	0.05
5 bottom	-4.59	1.37	0.00	0.00	-0.77	0.06
6 top	-1.94	-4.04	0.00	0.00	-9.06	-3.71
6 a	-1.32	-3.52	0.00	0.00	-7.76	-3.31
6 b	1.50	-1.01	0.00	0.00	-3.50	-1.44
6 c	4.32	1.20	0.00	0.00	-0.72	-0.19
6 bottom	4.59	1.37	0.00	0.00	-0.84	-0.08

VEH: R1 - TOLL ROAD BRUG(5.75.44) page 39
date 11/09/2009; time 13:29:03
Cline Avenue - Load Rating - Single Box 41' Wide

Summary of the results (Maximum)

Section	Deadload Moment	Deadload Ax.Frc	P.T. Moment	P.T. Ax.Frc	Live load Moment	Live load Ax.Frc
1 a	-0.18	0.02	0.00	0.00	0.12	0.01
1 b	-2.51	0.27	0.00	0.00	0.62	0.12
1 c	-6.44	0.92	0.00	0.00	0.05	0.06
1 right	-7.60	1.13	0.00	0.00	0.06	0.08
2 left	-9.55	0.30	0.00	0.00	-1.61	1.56
2 a	-8.19	-0.02	0.00	0.00	0.24	1.31
2 b	-1.77	-1.53	0.00	0.00	3.84	-0.10
2 c	3.39	-2.73	0.00	0.00	7.41	-1.43
2 right	-9.55	0.30	0.00	0.00	-1.61	1.56
3 left	-7.60	1.13	0.00	0.00	0.06	0.08
3 a	-6.44	0.92	0.00	0.00	0.05	0.06
3 b	-2.51	0.27	0.00	0.00	0.62	0.12
3 c	-0.18	0.02	0.00	0.00	0.12	0.01
3 right	0.00	0.00	0.00	0.00	0.00	0.00
4 left	-4.59	0.83	0.00	0.00	1.35	-0.88
4 a	-3.73	1.26	0.00	0.00	1.27	-0.70
4 b	4.43	5.39	0.00	0.00	0.01	0.81
4 c	-3.73	1.26	0.00	0.00	1.27	-0.70
4 right	-4.59	0.83	0.00	0.00	1.35	-0.88
5 top	1.94	-4.04	0.00	0.00	9.60	-2.39
5 a	1.32	-3.52	0.00	0.00	8.54	-2.13
5 b	-1.50	-1.01	0.00	0.00	4.34	-0.98
5 c	-4.32	1.20	0.00	0.00	1.23	-0.21
5 bottom	-4.59	1.37	0.00	0.00	1.35	-0.11
6 top	-1.94	-4.04	0.00	0.00	5.32	-5.16
6 a	-1.32	-3.52	0.00	0.00	4.71	-4.43
6 b	1.50	-1.01	0.00	0.00	1.76	-1.84
6 c	4.32	1.20	0.00	0.00	1.09	0.09
6 bottom	4.59	1.37	0.00	0.00	1.33	0.11

Summary of the results (Minimum)

Section	Deadload Moment	Deadload Ax.Frc	P.T. Moment	P.T. Ax.Frc	Live load Moment	Live load Ax.Frc
1 a	-0.18	0.02	0.00	0.00	-0.03	0.01
1 b	-2.51	0.27	0.00	0.00	-0.20	0.11
1 c	-6.44	0.92	0.00	0.00	-5.48	0.49
1 right	-7.60	1.13	0.00	0.00	-6.94	0.71
2 left	-9.55	0.30	0.00	0.00	-10.68	-0.73
2 a	-8.19	-0.02	0.00	0.00	-9.49	-0.82
2 b	-1.77	-1.53	0.00	0.00	-4.38	-1.25
2 c	3.39	-2.73	0.00	0.00	0.04	-0.22
2 right	-9.55	0.30	0.00	0.00	-10.68	-0.73
3 left	-7.60	1.13	0.00	0.00	-6.93	0.71
3 a	-6.44	0.92	0.00	0.00	-5.48	0.49
3 b	-2.51	0.27	0.00	0.00	-0.20	0.11
3 c	-0.18	0.02	0.00	0.00	-0.03	0.01
3 right	0.00	0.00	0.00	0.00	0.00	0.00
4 left	-4.59	0.83	0.00	0.00	-1.33	0.70

VEH: R1 - TOLL ROAD BRUG(5.75.44) page 40
date 11/09/2009; time 13:29:03
Cline Avenue - Load Rating - Single Box 41' Wide

Summary of the results (Minimum)

Section	Deadload Moment	Deadload Ax.Frc	P.T. Moment	P.T. Ax.Frc	Live load Moment	Live load Ax.Frc
4 a	-3.73	1.26	0.00	0.00	-1.26	0.73
4 b	4.43	5.39	0.00	0.00	-0.09	2.08
4 c	-3.73	1.26	0.00	0.00	-1.26	0.73
4 right	-4.59	0.83	0.00	0.00	-1.33	0.70
5 top	1.94	-4.04	0.00	0.00	-5.32	-5.16
5 a	1.32	-3.52	0.00	0.00	-4.71	-4.43
5 b	-1.50	-1.01	0.00	0.00	-1.76	-1.84
5 c	-4.32	1.20	0.00	0.00	-1.09	0.09
5 bottom	-4.59	1.37	0.00	0.00	-1.33	0.11
6 top	-1.94	-4.04	0.00	0.00	-9.60	-2.39
6 a	-1.32	-3.52	0.00	0.00	-8.54	-2.14
6 b	1.50	-1.01	0.00	0.00	-4.34	-0.98
6 c	4.32	1.20	0.00	0.00	-1.23	-0.21
6 bottom	4.59	1.37	0.00	0.00	-1.35	-0.11

VEH: R2 - TOLL ROAD BRUG(5.75.44) page 39
date 11/09/2009; time 13:29:04
Cline Avenue - Load Rating - Single Box 41' Wide

Summary of the results (Maximum)

Section	--- Deadload ----		----- P.T. ------		--- Live load ---	
	Moment	Ax.Frc	Moment	Ax.Frc	Moment	Ax.Frc
1 a	-0.18	0.02	0.00	0.00	0.16	0.00
1 b	-2.51	0.27	0.00	0.00	0.97	0.07
1 c	-6.44	0.92	0.00	0.00	0.05	0.07
1 right	-7.60	1.13	0.00	0.00	0.06	0.09
2 left	-9.55	0.30	0.00	0.00	-1.44	1.44
2 a	-8.19	-0.02	0.00	0.00	0.70	1.15
2 b	-1.77	-1.53	0.00	0.00	3.96	-0.07
2 c	3.39	-2.73	0.00	0.00	7.01	-1.21
2 right	-9.55	0.30	0.00	0.00	-1.44	1.44
3 left	-7.60	1.13	0.00	0.00	0.06	0.09
3 a	-6.44	0.92	0.00	0.00	0.05	0.07
3 b	-2.51	0.27	0.00	0.00	0.97	0.07
3 c	-0.18	0.02	0.00	0.00	0.16	0.00
3 right	0.00	0.00	0.00	0.00	0.00	0.00
4 left	-4.59	0.83	0.00	0.00	1.26	-0.79
4 a	-3.73	1.26	0.00	0.00	1.19	-0.64
4 b	4.43	5.39	0.00	0.00	0.01	0.66
4 c	-3.73	1.26	0.00	0.00	1.19	-0.64
4 right	-4.59	0.83	0.00	0.00	1.26	-0.79
5 top	1.94	-4.04	0.00	0.00	7.82	-2.09
5 a	1.32	-3.52	0.00	0.00	6.93	-1.85
5 b	-1.50	-1.01	0.00	0.00	3.55	-0.81
5 c	-4.32	1.20	0.00	0.00	1.15	-0.19
5 bottom	-4.59	1.37	0.00	0.00	1.26	-0.11
6 top	-1.94	-4.04	0.00	0.00	4.79	-5.69
6 a	-1.32	-3.52	0.00	0.00	4.19	-4.73
6 b	1.50	-1.01	0.00	0.00	1.55	-1.67
6 c	4.32	1.20	0.00	0.00	1.03	0.09
6 bottom	4.59	1.37	0.00	0.00	1.26	0.10

Summary of the results (Minimum)

Section	--- Deadload ----		----- P.T. ------		--- Live load ---	
	Moment	Ax.Frc	Moment	Ax.Frc	Moment	Ax.Frc
1 a	-0.18	0.02	0.00	0.00	-0.02	0.00
1 b	-2.51	0.27	0.00	0.00	0.01	0.02
1 c	-6.44	0.92	0.00	0.00	-4.73	0.42
1 right	-7.60	1.13	0.00	0.00	-6.15	0.69
2 left	-9.55	0.30	0.00	0.00	-8.65	-0.61
2 a	-8.19	-0.02	0.00	0.00	-7.66	-0.69
2 b	-1.77	-1.53	0.00	0.00	-3.66	-1.07
2 c	3.39	-2.73	0.00	0.00	0.03	-0.19
2 right	-9.55	0.30	0.00	0.00	-8.65	-0.61
3 left	-7.60	1.13	0.00	0.00	-6.15	0.69
3 a	-6.44	0.92	0.00	0.00	-4.73	0.42
3 b	-2.51	0.27	0.00	0.00	0.01	0.02
3 c	-0.18	0.02	0.00	0.00	-0.02	0.00
3 right	0.00	0.00	0.00	0.00	0.00	0.00
4 left	-4.59	0.83	0.00	0.00	-1.26	0.65

VEH: R2 - TOLL ROAD BRUG(5.75.44) page 40
date 11/09/2009; time 13:29:04
Cline Avenue - Load Rating - Single Box 41' Wide

Summary of the results (Minimum)

Section	--- Deadload ----		----- P.T. ------		--- Live load ---	
	Moment	Ax.Frc	Moment	Ax.Frc	Moment	Ax.Frc
4 a	-3.73	1.26	0.00	0.00	-1.19	0.68
4 b	4.43	5.39	0.00	0.00	-0.08	1.71
4 c	-3.73	1.26	0.00	0.00	-1.19	0.68
4 right	-4.59	0.83	0.00	0.00	-1.26	0.65
5 top	1.94	-4.04	0.00	0.00	-4.79	-5.69
5 a	1.32	-3.52	0.00	0.00	-4.19	-4.73
5 b	-1.50	-1.01	0.00	0.00	-1.55	-1.67
5 c	-4.32	1.20	0.00	0.00	-1.03	0.09
5 bottom	-4.59	1.37	0.00	0.00	-1.26	0.10
6 top	-1.94	-4.04	0.00	0.00	-7.82	-2.09
6 a	-1.32	-3.52	0.00	0.00	-6.93	-1.85
6 b	1.50	-1.01	0.00	0.00	-3.55	-0.81
6 c	4.32	1.20	0.00	0.00	-1.15	-0.19
6 bottom	4.59	1.37	0.00	0.00	-1.26	-0.11

VEH: R3 - TOLL ROAD BRUG(5.75.44) page 39
date 11/09/2009; time 13:29:04
Cline Avenue - Load Rating - Single Box 41' Wide

Summary of the results (Maximum)

Section	--- Deadload ---		----- P.T. ------		--- Live load ---	
	Moment	Ax.Frc	Moment	Ax.Frc	Moment	Ax.Frc
1 a	-0.18	0.02	0.00	0.00	0.14	0.00
1 b	-2.51	0.27	0.00	0.00	0.66	0.08
1 c	-6.44	0.92	0.00	0.00	0.04	0.09
1 right	-7.60	1.13	0.00	0.00	0.05	0.12
2 left	-9.55	0.30	0.00	0.00	-1.21	1.43
2 a	-8.19	-0.02	0.00	0.00	0.56	1.20
2 b	-1.77	-1.53	0.00	0.00	3.87	0.00
2 c	3.39	-2.73	0.00	0.00	6.24	-1.04
2 right	-9.55	0.30	0.00	0.00	-1.21	1.43
3 left	-7.60	1.13	0.00	0.00	0.05	0.12
3 a	-6.44	0.92	0.00	0.00	0.04	0.09
3 b	-2.51	0.27	0.00	0.00	0.66	0.08
3 c	-0.18	0.02	0.00	0.00	0.14	0.00
3 right	0.00	0.00	0.00	0.00	0.00	0.00
4 left	-4.59	0.83	0.00	0.00	1.40	-0.85
4 a	-3.73	1.26	0.00	0.00	1.32	-0.68
4 b	4.43	5.39	0.00	0.00	0.01	0.58
4 c	-3.73	1.26	0.00	0.00	1.32	-0.68
4 right	-4.59	0.83	0.00	0.00	1.40	-0.85
5 top	1.94	-4.04	0.00	0.00	7.16	-1.33
5 a	1.32	-3.52	0.00	0.00	6.32	-1.19
5 b	-1.50	-1.01	0.00	0.00	3.09	-0.91
5 c	-4.32	1.20	0.00	0.00	1.25	-0.21
5 bottom	-4.59	1.37	0.00	0.00	1.40	-0.12
6 top	-1.94	-4.04	0.00	0.00	5.14	-5.06
6 a	-1.32	-3.52	0.00	0.00	4.47	-4.41
6 b	1.50	-1.01	0.00	0.00	1.57	-1.88
6 c	4.32	1.20	0.00	0.00	1.14	0.10
6 bottom	4.59	1.37	0.00	0.00	1.40	0.11

Summary of the results (Minimum)

Section	--- Deadload ---		----- P.T. ------		--- Live load ---	
	Moment	Ax.Frc	Moment	Ax.Frc	Moment	Ax.Frc
1 a	-0.18	0.02	0.00	0.00	-0.02	0.01
1 b	-2.51	0.27	0.00	0.00	-0.06	0.07
1 c	-6.44	0.92	0.00	0.00	-4.93	0.40
1 right	-7.60	1.13	0.00	0.00	-6.33	0.59
2 left	-9.55	0.30	0.00	0.00	-8.37	-0.47
2 a	-8.19	-0.02	0.00	0.00	-7.37	-0.55
2 b	-1.77	-1.53	0.00	0.00	-3.81	-0.96
2 c	3.39	-2.73	0.00	0.00	0.01	-0.18
2 right	-9.55	0.30	0.00	0.00	-8.37	-0.47
3 left	-7.60	1.13	0.00	0.00	-6.33	0.59
3 a	-6.44	0.92	0.00	0.00	-4.93	0.40
3 b	-2.51	0.27	0.00	0.00	-0.06	0.07
3 c	-0.18	0.02	0.00	0.00	-0.02	0.01
3 right	0.00	0.00	0.00	0.00	0.00	0.00
4 left	-4.59	0.83	0.00	0.00	-1.40	0.70

VEH: R3 - TOLL ROAD BRUG(5.75.44) page 40
date 11/09/2009; time 13:29:04
Cline Avenue - Load Rating - Single Box 41' Wide

Summary of the results (Minimum)

Section	--- Deadload ---		----- P.T. ------		--- Live load ---	
	Moment	Ax.Frc	Moment	Ax.Frc	Moment	Ax.Frc
4 a	-3.73	1.26	0.00	0.00	-1.32	0.72
4 b	4.43	5.39	0.00	0.00	-0.07	1.45
4 c	-3.73	1.26	0.00	0.00	-1.32	0.72
4 right	-4.59	0.83	0.00	0.00	-1.40	0.70
5 top	1.94	-4.04	0.00	0.00	-5.14	-5.06
5 a	1.32	-3.52	0.00	0.00	-4.47	-4.41
5 b	-1.50	-1.01	0.00	0.00	-1.57	-1.88
5 c	-4.32	1.20	0.00	0.00	-1.14	0.10
5 bottom	-4.59	1.37	0.00	0.00	-1.40	0.11
6 top	-1.94	-4.04	0.00	0.00	-7.16	-1.33
6 a	-1.32	-3.52	0.00	0.00	-6.32	-1.19
6 b	1.50	-1.01	0.00	0.00	-3.09	-0.91
6 c	4.32	1.20	0.00	0.00	-1.25	-0.21
6 bottom	4.59	1.37	0.00	0.00	-1.40	-0.12

VEH: R4 - MICHIGAN T BRUG(5.75.44) page 39
date 11/09/2009; time 13:29:05
Cline Avenue - Load Rating - Single Box 41' Wide

Summary of the results (Maximum)

Section	--- Deadload ---		----- P.T. ------		--- Live load ---	
	Moment	Ax.Frc	Moment	Ax.Frc	Moment	Ax.Frc
1 a	-0.18	0.02	0.00	0.00	0.11	0.00
1 b	-2.51	0.27	0.00	0.00	0.70	0.05
1 c	-6.44	0.92	0.00	0.00	0.07	0.11
1 right	-7.60	1.13	0.00	0.00	0.09	0.13
2 left	-9.55	0.30	0.00	0.00	0.38	1.45
2 a	-8.19	-0.02	0.00	0.00	2.01	1.24
2 b	-1.77	-1.53	0.00	0.00	4.39	-0.02
2 c	3.39	-2.73	0.00	0.00	6.44	-1.43
2 right	-9.55	0.30	0.00	0.00	0.38	1.45
3 left	-7.60	1.13	0.00	0.00	0.09	0.13
3 a	-6.44	0.92	0.00	0.00	0.07	0.11
3 b	-2.51	0.27	0.00	0.00	0.70	0.05
3 c	-0.18	0.02	0.00	0.00	0.11	0.00
3 right	0.00	0.00	0.00	0.00	0.00	0.00
4 left	-4.59	0.83	0.00	0.00	1.72	-1.01
4 a	-3.73	1.26	0.00	0.00	1.63	-0.87
4 b	4.43	5.39	0.00	0.00	0.01	0.73
4 c	-3.73	1.26	0.00	0.00	1.63	-0.87
4 right	-4.59	0.83	0.00	0.00	1.72	-1.01
5 top	1.94	-4.04	0.00	0.00	8.63	-1.13
5 a	1.32	-3.52	0.00	0.00	7.74	-1.01
5 b	-1.50	-1.01	0.00	0.00	3.93	-0.72
5 c	-4.32	1.20	0.00	0.00	1.58	-0.21
5 bottom	-4.59	1.37	0.00	0.00	1.72	-0.14
6 top	-1.94	-4.04	0.00	0.00	5.99	-4.45
6 a	-1.32	-3.52	0.00	0.00	5.26	-3.69
6 b	1.50	-1.01	0.00	0.00	1.93	-1.35
6 c	4.32	1.20	0.00	0.00	1.43	0.12
6 bottom	4.59	1.37	0.00	0.00	1.75	0.14

Summary of the results (Minimum)

Section	--- Deadload ---		----- P.T. ------		--- Live load ---	
	Moment	Ax.Frc	Moment	Ax.Frc	Moment	Ax.Frc
1 a	-0.18	0.02	0.00	0.00	-0.03	0.00
1 b	-2.51	0.27	0.00	0.00	0.00	0.05
1 c	-6.44	0.92	0.00	0.00	-4.33	0.30
1 right	-7.60	1.13	0.00	0.00	-5.48	0.51
2 left	-9.55	0.30	0.00	0.00	-8.65	-1.00
2 a	-8.19	-0.02	0.00	0.00	-7.93	-1.05
2 b	-1.77	-1.53	0.00	0.00	-3.96	-1.25
2 c	3.39	-2.73	0.00	0.00	0.03	-0.23
2 right	-9.55	0.30	0.00	0.00	-8.65	-1.00
3 left	-7.60	1.13	0.00	0.00	-5.47	0.51
3 a	-6.44	0.92	0.00	0.00	-4.33	0.30
3 b	-2.51	0.27	0.00	0.00	0.00	0.05
3 c	-0.18	0.02	0.00	0.00	-0.03	0.00
3 right	0.00	0.00	0.00	0.00	0.00	0.00
4 left	-4.59	0.83	0.00	0.00	-1.75	0.88

VEH: R4 - MICHIGAN T BRUG(5.75.44) page 40
date 11/09/2009; time 13:29:05
Cline Avenue - Load Rating - Single Box 41' Wide

Summary of the results (Minimum)

Section	--- Deadload ---		----- P.T. ------		--- Live load ---	
	Moment	Ax.Frc	Moment	Ax.Frc	Moment	Ax.Frc
4 a	-3.73	1.26	0.00	0.00	-1.66	0.91
4 b	4.43	5.39	0.00	0.00	-0.10	1.92
4 c	-3.73	1.26	0.00	0.00	-1.66	0.91
4 right	-4.59	0.83	0.00	0.00	-1.75	0.88
5 top	1.94	-4.04	0.00	0.00	-5.99	-4.45
5 a	1.32	-3.52	0.00	0.00	-5.26	-3.69
5 b	-1.50	-1.01	0.00	0.00	-1.93	-1.35
5 c	-4.32	1.20	0.00	0.00	-1.43	0.12
5 bottom	-4.59	1.37	0.00	0.00	-1.75	0.14
6 top	-1.94	-4.04	0.00	0.00	-8.63	-1.13
6 a	-1.32	-3.52	0.00	0.00	-7.74	-1.01
6 b	1.50	-1.01	0.00	0.00	-3.93	-0.72
6 c	4.32	1.20	0.00	0.00	-1.58	-0.21
6 bottom	4.59	1.37	0.00	0.00	-1.72	-0.14

VEH: R5 - MICHIGAN T BRUG(5.75.44) page 39
date 11/09/2009; time 13:29:05
Cline Avenue - Load Rating - Single Box 41' Wide

Summary of the results (Maximum)

Section	--- Deadload ----		----- P.T. ------		--- Live load ---	
	Moment	Ax.Frc	Moment	Ax.Frc	Moment	Ax.Frc
1 a	-0.18	0.02	0.00	0.00	0.02	0.01
1 b	-2.51	0.27	0.00	0.00	0.02	0.03
1 c	-6.44	0.92	0.00	0.00	0.07	0.10
1 right	-7.60	1.13	0.00	0.00	0.08	0.13
2 left	-9.55	0.30	0.00	0.00	-0.06	1.64
2 a	-8.19	-0.02	0.00	0.00	0.95	1.48
2 b	-1.77	-1.53	0.00	0.00	3.96	-0.05
2 c	3.39	-2.73	0.00	0.00	6.59	-1.63
2 right	-9.55	0.30	0.00	0.00	-0.06	1.64
3 left	-7.60	1.13	0.00	0.00	0.08	0.13
3 a	-6.44	0.92	0.00	0.00	0.07	0.10
3 b	-2.51	0.27	0.00	0.00	0.02	0.03
3 c	-0.18	0.02	0.00	0.00	0.02	0.01
3 right	0.00	0.00	0.00	0.00	0.00	0.00
4 left	-4.59	0.83	0.00	0.00	1.80	-1.11
4 a	-3.73	1.26	0.00	0.00	1.71	-0.92
4 b	4.43	5.39	0.00	0.00	0.01	0.89
4 c	-3.73	1.26	0.00	0.00	1.71	-0.92
4 right	-4.59	0.83	0.00	0.00	1.80	-1.11
5 top	1.94	-4.04	0.00	0.00	10.41	-1.59
5 a	1.32	-3.52	0.00	0.00	9.28	-1.43
5 b	-1.50	-1.01	0.00	0.00	4.79	-1.02
5 c	-4.32	1.20	0.00	0.00	1.65	-0.24
5 bottom	-4.59	1.37	0.00	0.00	1.80	-0.15
6 top	-1.94	-4.04	0.00	0.00	6.74	-3.55
6 a	-1.32	-3.52	0.00	0.00	5.89	-3.26
6 b	1.50	-1.01	0.00	0.00	2.16	-1.69
6 c	4.32	1.20	0.00	0.00	1.48	0.12
6 bottom	4.59	1.37	0.00	0.00	1.81	0.14

Summary of the results (Minimum)

Section	--- Deadload ----		----- P.T. ------		--- Live load ---	
	Moment	Ax.Frc	Moment	Ax.Frc	Moment	Ax.Frc
1 a	-0.18	0.02	0.00	0.00	-0.03	0.01
1 b	-2.51	0.27	0.00	0.00	-0.79	0.12
1 c	-6.44	0.92	0.00	0.00	-5.57	0.42
1 right	-7.60	1.13	0.00	0.00	-6.82	0.51
2 left	-9.55	0.30	0.00	0.00	-11.09	-0.81
2 a	-8.19	-0.02	0.00	0.00	-10.08	-1.18
2 b	-1.77	-1.53	0.00	0.00	-4.99	-1.46
2 c	3.39	-2.73	0.00	0.00	0.04	-0.26
2 right	-9.55	0.30	0.00	0.00	-11.09	-0.81
3 left	-7.60	1.13	0.00	0.00	-6.82	0.51
3 a	-6.44	0.92	0.00	0.00	-5.57	0.42
3 b	-2.51	0.27	0.00	0.00	-0.79	0.12
3 c	-0.18	0.02	0.00	0.00	-0.03	0.01
3 right	0.00	0.00	0.00	0.00	0.00	0.00
4 left	-4.59	0.83	0.00	0.00	-1.81	0.93

VEH: R5 - MICHIGAN T BRUG(5.75.44) page 40
date 11/09/2009; time 13:29:05
Cline Avenue - Load Rating - Single Box 41' Wide

Summary of the results (Minimum)

Section	--- Deadload ----		----- P.T. ------		--- Live load ---	
	Moment	Ax.Frc	Moment	Ax.Frc	Moment	Ax.Frc
4 a	-3.73	1.26	0.00	0.00	-1.71	0.96
4 b	4.43	5.39	0.00	0.00	-0.11	2.29
4 c	-3.73	1.26	0.00	0.00	-1.71	0.96
4 right	-4.59	0.83	0.00	0.00	-1.81	0.93
5 top	1.94	-4.04	0.00	0.00	-6.74	-3.55
5 a	1.32	-3.52	0.00	0.00	-5.89	-3.26
5 b	-1.50	-1.01	0.00	0.00	-2.16	-1.69
5 c	-4.32	1.20	0.00	0.00	-1.48	0.12
5 bottom	-4.59	1.37	0.00	0.00	-1.81	0.14
6 top	-1.94	-4.04	0.00	0.00	-10.41	-1.59
6 a	-1.32	-3.52	0.00	0.00	-9.28	-1.43
6 b	1.50	-1.01	0.00	0.00	-4.79	-1.02
6 c	4.32	1.20	0.00	0.00	-1.65	-0.24
6 bottom	4.59	1.37	0.00	0.00	-1.80	-0.15

VEH: S1 - SPECIAL TR BRUG(5.75.44) page 39
date 11/09/2009; time 13:29:06
Cline Avenue - Load Rating - Single Box 41' Wide

Summary of the results (Maximum)

Section	--- Deadload ---		----- P.T. ------		--- Live load ---	
	Moment	Ax.Frc	Moment	Ax.Frc	Moment	Ax.Frc
1 a	-0.18	0.02	0.00	0.00	0.20	0.00
1 b	-2.51	0.27	0.00	0.00	0.98	0.12
1 c	-6.44	0.92	0.00	0.00	0.05	0.08
1 right	-7.60	1.13	0.00	0.00	0.06	0.10
2 left	-9.55	0.30	0.00	0.00	-2.63	1.76
2 a	-8.19	-0.02	0.00	0.00	-0.11	1.47
2 b	-1.77	-1.53	0.00	0.00	4.54	-0.10
2 c	3.39	-2.73	0.00	0.00	8.52	-1.40
2 right	-9.55	0.30	0.00	0.00	-2.63	1.76
3 left	-7.60	1.13	0.00	0.00	0.06	0.10
3 a	-6.44	0.92	0.00	0.00	0.05	0.08
3 b	-2.51	0.27	0.00	0.00	0.97	0.12
3 c	-0.18	0.02	0.00	0.00	0.20	0.00
3 right	0.00	0.00	0.00	0.00	0.00	0.00
4 left	-4.59	0.83	0.00	0.00	1.45	-0.95
4 a	-3.73	1.26	0.00	0.00	1.36	-0.73
4 b	4.43	5.39	0.00	0.00	0.01	0.79
4 c	-3.73	1.26	0.00	0.00	1.36	-0.73
4 right	-4.59	0.83	0.00	0.00	1.45	-0.95
5 top	1.94	-4.04	0.00	0.00	9.79	-2.98
5 a	1.32	-3.52	0.00	0.00	8.58	-2.67
5 b	-1.50	-1.01	0.00	0.00	4.21	-1.21
5 c	-4.32	1.20	0.00	0.00	1.30	-0.24
5 bottom	-4.59	1.37	0.00	0.00	1.45	-0.13
6 top	-1.94	-4.04	0.00	0.00	5.77	-6.90
6 a	-1.32	-3.52	0.00	0.00	5.03	-5.94
6 b	1.50	-1.01	0.00	0.00	1.81	-2.44
6 c	4.32	1.20	0.00	0.00	1.16	0.10
6 bottom	4.59	1.37	0.00	0.00	1.42	0.11

Summary of the results (Minimum)

Section	--- Deadload ---		----- P.T. ------		--- Live load ---	
	Moment	Ax.Frc	Moment	Ax.Frc	Moment	Ax.Frc
1 a	-0.18	0.02	0.00	0.00	-0.03	0.01
1 b	-2.51	0.27	0.00	0.00	0.02	0.02
1 c	-6.44	0.92	0.00	0.00	-6.49	0.59
1 right	-7.60	1.13	0.00	0.00	-8.28	0.88
2 left	-9.55	0.30	0.00	0.00	-11.55	-0.54
2 a	-8.19	-0.02	0.00	0.00	-10.12	-0.78
2 b	-1.77	-1.53	0.00	0.00	-4.74	-1.24
2 c	3.39	-2.73	0.00	0.00	0.02	-0.22
2 right	-9.55	0.30	0.00	0.00	-11.55	-0.53
3 left	-7.60	1.13	0.00	0.00	-8.28	0.88
3 a	-6.44	0.92	0.00	0.00	-6.49	0.59
3 b	-2.51	0.27	0.00	0.00	0.02	0.02
3 c	-0.18	0.02	0.00	0.00	-0.03	0.01
3 right	0.00	0.00	0.00	0.00	0.00	0.00
4 left	-4.59	0.83	0.00	0.00	-1.42	0.74

VEH: S1 - SPECIAL TR BRUG(5.75.44) page 40
date 11/09/2009; time 13:29:06
Cline Avenue - Load Rating - Single Box 41' Wide

Summary of the results (Minimum)

Section	--- Deadload ---		----- P.T. ------		--- Live load ---	
	Moment	Ax.Frc	Moment	Ax.Frc	Moment	Ax.Frc
4 a	-3.73	1.26	0.00	0.00	-1.34	0.77
4 b	4.43	5.39	0.00	0.00	-0.09	1.98
4 c	-3.73	1.26	0.00	0.00	-1.34	0.77
4 right	-4.59	0.83	0.00	0.00	-1.42	0.74
5 top	1.94	-4.04	0.00	0.00	-5.77	-6.90
5 a	1.32	-3.52	0.00	0.00	-5.03	-5.94
5 b	-1.50	-1.01	0.00	0.00	-1.81	-2.44
5 c	-4.32	1.20	0.00	0.00	-1.16	0.10
5 bottom	-4.59	1.37	0.00	0.00	-1.42	0.11
6 top	-1.94	-4.04	0.00	0.00	-9.79	-2.98
6 a	-1.32	-3.52	0.00	0.00	-8.58	-2.67
6 b	1.50	-1.01	0.00	0.00	-4.21	-1.21
6 c	4.32	1.20	0.00	0.00	-1.30	-0.24
6 bottom	4.59	1.37	0.00	0.00	-1.45	-0.13

VEH: S2 - SPECIAL TR BRUG(5.75.44) page 39
date 11/09/2009; time 13:29:07
Cline Avenue - Load Rating - Single Box 41' Wide

Summary of the results (Maximum)

Section	--- Deadload ---- Moment	Ax.Frc	----- P.T. ------ Moment	Ax.Frc	--- Live load --- Moment	Ax.Frc
1 a	-0.18	0.02	0.00	0.00	0.16	0.01
1 b	-2.51	0.27	0.00	0.00	0.79	0.13
1 c	-6.44	0.92	0.00	0.00	0.04	0.07
1 right	-7.60	1.13	0.00	0.00	0.05	0.08
2 left	-9.55	0.30	0.00	0.00	-2.32	1.66
2 a	-8.19	-0.02	0.00	0.00	-0.12	1.37
2 b	-1.77	-1.53	0.00	0.00	4.06	-0.09
2 c	3.39	-2.73	0.00	0.00	8.07	-1.34
2 right	-9.55	0.30	0.00	0.00	-2.32	1.66
3 left	-7.60	1.13	0.00	0.00	0.05	0.08
3 a	-6.44	0.92	0.00	0.00	0.04	0.07
3 b	-2.51	0.27	0.00	0.00	0.79	0.13
3 c	-0.18	0.02	0.00	0.00	0.16	0.01
3 right	0.00	0.00	0.00	0.00	0.00	0.00
4 left	-4.59	0.83	0.00	0.00	1.33	-0.88
4 a	-3.73	1.26	0.00	0.00	1.25	-0.68
4 b	4.43	5.39	0.00	0.00	0.01	0.79
4 c	-3.73	1.26	0.00	0.00	1.25	-0.68
4 right	-4.59	0.83	0.00	0.00	1.33	-0.88
5 top	1.94	-4.04	0.00	0.00	9.70	-2.72
5 a	1.32	-3.52	0.00	0.00	8.54	-2.43
5 b	-1.50	-1.01	0.00	0.00	4.20	-1.11
5 c	-4.32	1.20	0.00	0.00	1.19	-0.21
5 bottom	-4.59	1.37	0.00	0.00	1.33	-0.11
6 top	-1.94	-4.04	0.00	0.00	5.31	-5.94
6 a	-1.32	-3.52	0.00	0.00	4.71	-5.07
6 b	1.50	-1.01	0.00	0.00	1.73	-2.07
6 c	4.32	1.20	0.00	0.00	1.06	0.09
6 bottom	4.59	1.37	0.00	0.00	1.29	0.10

Summary of the results (Minimum)

Section	--- Deadload ---- Moment	Ax.Frc	----- P.T. ------ Moment	Ax.Frc	--- Live load --- Moment	Ax.Frc
1 a	-0.18	0.02	0.00	0.00	-0.04	0.01
1 b	-2.51	0.27	0.00	0.00	-0.09	0.13
1 c	-6.44	0.92	0.00	0.00	-6.00	0.57
1 right	-7.60	1.13	0.00	0.00	-7.63	0.83
2 left	-9.55	0.30	0.00	0.00	-11.29	-0.53
2 a	-8.19	-0.02	0.00	0.00	-10.03	-0.76
2 b	-1.77	-1.53	0.00	0.00	-4.61	-1.18
2 c	3.39	-2.73	0.00	0.00	0.03	-0.21
2 right	-9.55	0.30	0.00	0.00	-11.30	-0.53
3 left	-7.60	1.13	0.00	0.00	-7.63	0.83
3 a	-6.44	0.92	0.00	0.00	-6.00	0.57
3 b	-2.51	0.27	0.00	0.00	-0.09	0.13
3 c	-0.18	0.02	0.00	0.00	-0.04	0.01
3 right	0.00	0.00	0.00	0.00	0.00	0.00
4 left	-4.59	0.83	0.00	0.00	-1.29	0.68

VEH: S2 - SPECIAL TR BRUG(5.75.44) page 40
date 11/09/2009; time 13:29:07
Cline Avenue - Load Rating - Single Box 41' Wide

Summary of the results (Minimum)

Section	--- Deadload ---- Moment	Ax.Frc	----- P.T. ------ Moment	Ax.Frc	--- Live load --- Moment	Ax.Frc
4 a	-3.73	1.26	0.00	0.00	-1.22	0.71
4 b	4.43	5.39	0.00	0.00	-0.08	1.97
4 c	-3.73	1.26	0.00	0.00	-1.22	0.71
4 right	-4.59	0.83	0.00	0.00	-1.29	0.68
5 top	1.94	-4.04	0.00	0.00	-5.31	-5.94
5 a	1.32	-3.52	0.00	0.00	-4.71	-5.07
5 b	-1.50	-1.01	0.00	0.00	-1.73	-2.07
5 c	-4.32	1.20	0.00	0.00	-1.06	0.09
5 bottom	-4.59	1.37	0.00	0.00	-1.29	0.10
6 top	-1.94	-4.04	0.00	0.00	-9.70	-2.72
6 a	-1.32	-3.52	0.00	0.00	-8.54	-2.43
6 b	1.50	-1.01	0.00	0.00	-4.20	-1.11
6 c	4.32	1.20	0.00	0.00	-1.19	-0.21
6 bottom	4.59	1.37	0.00	0.00	-1.33	-0.11

VEH: S3 - SPECIAL TR BRUG(5.75.44) page 39
date 11/09/2009; time 13:29:07
Cline Avenue - Load Rating - Single Box 41' Wide

Summary of the results (Maximum)

Section	Deadload Moment	Deadload Ax.Frc	P.T. Moment	P.T. Ax.Frc	Live load Moment	Live load Ax.Frc
1 a	-0.18	0.02	0.00	0.00	0.17	0.01
1 b	-2.51	0.27	0.00	0.00	0.82	0.17
1 c	-6.44	0.92	0.00	0.00	0.04	0.09
1 right	-7.60	1.13	0.00	0.00	0.05	0.11
2 left	-9.55	0.30	0.00	0.00	-2.54	2.00
2 a	-8.19	-0.02	0.00	0.00	-0.06	1.69
2 b	-1.77	-1.53	0.00	0.00	4.84	-0.07
2 c	3.39	-2.73	0.00	0.00	9.61	-1.57
2 right	-9.55	0.30	0.00	0.00	-2.54	2.00
3 left	-7.60	1.13	0.00	0.00	0.05	0.11
3 a	-6.44	0.92	0.00	0.00	0.04	0.09
3 b	-2.51	0.27	0.00	0.00	0.82	0.17
3 c	-0.18	0.02	0.00	0.00	0.17	0.01
3 right	0.00	0.00	0.00	0.00	0.00	0.00
4 left	-4.59	0.83	0.00	0.00	1.65	-1.09
4 a	-3.73	1.26	0.00	0.00	1.55	-0.84
4 b	4.43	5.39	0.00	0.00	0.01	0.97
4 c	-3.73	1.26	0.00	0.00	1.55	-0.84
4 right	-4.59	0.83	0.00	0.00	1.65	-1.09
5 top	1.94	-4.04	0.00	0.00	11.79	-3.24
5 a	1.32	-3.52	0.00	0.00	10.39	-2.90
5 b	-1.50	-1.01	0.00	0.00	5.11	-1.33
5 c	-4.32	1.20	0.00	0.00	1.48	-0.26
5 bottom	-4.59	1.37	0.00	0.00	1.65	-0.14
6 top	-1.94	-4.04	0.00	0.00	6.64	-6.75
6 a	-1.32	-3.52	0.00	0.00	5.79	-5.79
6 b	1.50	-1.01	0.00	0.00	2.13	-2.43
6 c	4.32	1.20	0.00	0.00	1.32	0.11
6 bottom	4.59	1.37	0.00	0.00	1.61	0.13

Summary of the results (Minimum)

Section	Deadload Moment	Deadload Ax.Frc	P.T. Moment	P.T. Ax.Frc	Live load Moment	Live load Ax.Frc
1 a	-0.18	0.02	0.00	0.00	-0.06	0.01
1 b	-2.51	0.27	0.00	0.00	-0.22	0.16
1 c	-6.44	0.92	0.00	0.00	-7.18	0.68
1 right	-7.60	1.13	0.00	0.00	-9.08	0.97
2 left	-9.55	0.30	0.00	0.00	-13.80	-0.77
2 a	-8.19	-0.02	0.00	0.00	-12.29	-0.89
2 b	-1.77	-1.53	0.00	0.00	-5.69	-1.40
2 c	3.39	-2.73	0.00	0.00	0.05	-0.25
2 right	-9.55	0.30	0.00	0.00	-13.80	-0.77
3 left	-7.60	1.13	0.00	0.00	-9.08	0.97
3 a	-6.44	0.92	0.00	0.00	-7.18	0.68
3 b	-2.51	0.27	0.00	0.00	-0.22	0.16
3 c	-0.18	0.02	0.00	0.00	-0.06	0.01
3 right	0.00	0.00	0.00	0.00	0.00	0.00
4 left	-4.59	0.83	0.00	0.00	-1.61	0.84

VEH: S3 - SPECIAL TR BRUG(5.75.44) page 40
date 11/09/2009; time 13:29:07
Cline Avenue - Load Rating - Single Box 41' Wide

Summary of the results (Minimum)

Section	Deadload Moment	Deadload Ax.Frc	P.T. Moment	P.T. Ax.Frc	Live load Moment	Live load Ax.Frc
4 a	-3.73	1.26	0.00	0.00	-1.53	0.88
4 b	4.43	5.39	0.00	0.00	-0.10	2.39
4 c	-3.73	1.26	0.00	0.00	-1.53	0.88
4 right	-4.59	0.83	0.00	0.00	-1.61	0.84
5 top	1.94	-4.04	0.00	0.00	-6.64	-6.75
5 a	1.32	-3.52	0.00	0.00	-5.79	-5.79
5 b	-1.50	-1.01	0.00	0.00	-2.13	-2.43
5 c	-4.32	1.20	0.00	0.00	-1.32	0.11
5 bottom	-4.59	1.37	0.00	0.00	-1.61	0.13
6 top	-1.94	-4.04	0.00	0.00	-11.79	-3.24
6 a	-1.32	-3.52	0.00	0.00	-10.39	-2.90
6 b	1.50	-1.01	0.00	0.00	-5.11	-1.33
6 c	4.32	1.20	0.00	0.00	-1.48	-0.26
6 bottom	4.59	1.37	0.00	0.00	-1.65	-0.14

VEH: S4 - SUPER LOAD BRUG(5.75.44) page 39
date 11/09/2009; time 13:29:08
Cline Avenue - Load Rating - Single Box 41' Wide

Summary of the results (Maximum)

Section	Deadload Moment	Deadload Ax.Frc	P.T. Moment	P.T. Ax.Frc	Live load Moment	Live load Ax.Frc
1 a	-0.18	0.02	0.00	0.00	0.13	0.00
1 b	-2.51	0.27	0.00	0.00	0.63	0.08
1 c	-6.44	0.92	0.00	0.00	0.03	0.06
1 right	-7.60	1.13	0.00	0.00	0.04	0.08
2 left	-9.55	0.30	0.00	0.00	-1.65	1.28
2 a	-8.19	-0.02	0.00	0.00	0.05	1.06
2 b	-1.77	-1.53	0.00	0.00	3.25	-0.05
2 c	3.39	-2.73	0.00	0.00	5.96	-0.99
2 right	-9.55	0.30	0.00	0.00	-1.65	1.28
3 left	-7.60	1.13	0.00	0.00	0.04	0.08
3 a	-6.44	0.92	0.00	0.00	0.03	0.06
3 b	-2.51	0.27	0.00	0.00	0.63	0.08
3 c	-0.18	0.02	0.00	0.00	0.13	0.00
3 right	0.00	0.00	0.00	0.00	0.00	0.00
4 left	-4.59	0.83	0.00	0.00	1.08	-0.70
4 a	-3.73	1.26	0.00	0.00	1.02	-0.54
4 b	4.43	5.39	0.00	0.00	0.01	0.57
4 c	-3.73	1.26	0.00	0.00	1.02	-0.54
4 right	-4.59	0.83	0.00	0.00	1.08	-0.70
5 top	1.94	-4.04	0.00	0.00	7.01	-2.08
5 a	1.32	-3.52	0.00	0.00	6.16	-1.86
5 b	-1.50	-1.01	0.00	0.00	3.04	-0.84
5 c	-4.32	1.20	0.00	0.00	0.97	-0.17
5 bottom	-4.59	1.37	0.00	0.00	1.08	-0.09
6 top	-1.94	-4.04	0.00	0.00	4.21	-4.74
6 a	-1.32	-3.52	0.00	0.00	3.69	-4.10
6 b	1.50	-1.01	0.00	0.00	1.33	-1.71
6 c	4.32	1.20	0.00	0.00	0.87	0.07
6 bottom	4.59	1.37	0.00	0.00	1.07	0.08

Summary of the results (Minimum)

Section	Deadload Moment	Deadload Ax.Frc	P.T. Moment	P.T. Ax.Frc	Live load Moment	Live load Ax.Frc
1 a	-0.18	0.02	0.00	0.00	-0.02	0.01
1 b	-2.51	0.27	0.00	0.00	-0.04	0.08
1 c	-6.44	0.92	0.00	0.00	-4.56	0.41
1 right	-7.60	1.13	0.00	0.00	-5.86	0.60
2 left	-9.55	0.30	0.00	0.00	-8.17	-0.38
2 a	-8.19	-0.02	0.00	0.00	-7.21	-0.56
2 b	-1.77	-1.53	0.00	0.00	-3.42	-0.89
2 c	3.39	-2.73	0.00	0.00	0.02	-0.16
2 right	-9.55	0.30	0.00	0.00	-8.17	-0.38
3 left	-7.60	1.13	0.00	0.00	-5.85	0.60
3 a	-6.44	0.92	0.00	0.00	-4.56	0.41
3 b	-2.51	0.27	0.00	0.00	-0.04	0.08
3 c	-0.18	0.02	0.00	0.00	-0.02	0.01
3 right	0.00	0.00	0.00	0.00	0.00	0.00
4 left	-4.59	0.83	0.00	0.00	-1.07	0.55

VEH: S4 - SUPER LOAD BRUG(5.75.44) page 40
date 11/09/2009; time 13:29:08
Cline Avenue - Load Rating - Single Box 41' Wide

Summary of the results (Minimum)

Section	Deadload Moment	Deadload Ax.Frc	P.T. Moment	P.T. Ax.Frc	Live load Moment	Live load Ax.Frc
4 a	-3.73	1.26	0.00	0.00	-1.01	0.57
4 b	4.43	5.39	0.00	0.00	-0.06	1.44
4 c	-3.73	1.26	0.00	0.00	-1.01	0.57
4 right	-4.59	0.83	0.00	0.00	-1.07	0.55
5 top	1.94	-4.04	0.00	0.00	-4.21	-4.74
5 a	1.32	-3.52	0.00	0.00	-3.69	-4.10
5 b	-1.50	-1.01	0.00	0.00	-1.33	-1.71
5 c	-4.32	1.20	0.00	0.00	-0.87	0.07
5 bottom	-4.59	1.37	0.00	0.00	-1.07	0.08
6 top	-1.94	-4.04	0.00	0.00	-7.01	-2.08
6 a	-1.32	-3.52	0.00	0.00	-6.16	-1.86
6 b	1.50	-1.01	0.00	0.00	-3.04	-0.84
6 c	4.32	1.20	0.00	0.00	-0.97	-0.17
6 bottom	4.59	1.37	0.00	0.00	-1.08	-0.09

VEH: S5 - SUPERLOAD BRUG(5.75.44) page 39
date 11/09/2009; time 13:29:08
Cline Avenue - Load Rating - Single Box 41' Wide

Summary of the results (Maximum)

Section	--- Deadload ---- Moment	Ax.Frc	----- P.T. ------ Moment	Ax.Frc	--- Live load --- Moment	Ax.Frc
1 a	-0.18	0.02	0.00	0.00	0.30	0.00
1 b	-2.51	0.27	0.00	0.00	1.50	0.02
1 c	-6.44	0.92	0.00	0.00	-0.03	-0.03
1 right	-7.60	1.13	0.00	0.00	-0.04	-0.03
2 left	-9.55	0.30	0.00	0.00	1.30	0.23
2 a	-8.19	-0.02	0.00	0.00	1.22	0.23
2 b	-1.77	-1.53	0.00	0.00	1.87	0.07
2 c	3.39	-2.73	0.00	0.00	3.94	0.36
2 right	-9.55	0.30	0.00	0.00	1.30	0.23
3 left	-7.60	1.13	0.00	0.00	-0.04	-0.03
3 a	-6.44	0.92	0.00	0.00	-0.03	-0.03
3 b	-2.51	0.27	0.00	0.00	1.50	0.02
3 c	-0.18	0.02	0.00	0.00	0.30	0.00
3 right	0.00	0.00	0.00	0.00	0.00	0.00
4 left	-4.59	0.83	0.00	0.00	0.47	-0.24
4 a	-3.73	1.26	0.00	0.00	0.45	-0.24
4 b	4.43	5.39	0.00	0.00	0.03	-0.46
4 c	-3.73	1.26	0.00	0.00	0.45	-0.24
4 right	-4.59	0.83	0.00	0.00	0.47	-0.24
5 top	1.94	-4.04	0.00	0.00	2.22	-4.05
5 a	1.32	-3.52	0.00	0.00	1.33	-5.75
5 b	-1.50	-1.01	0.00	0.00	0.40	-2.00
5 c	-4.32	1.20	0.00	0.00	0.39	-0.03
5 bottom	-4.59	1.37	0.00	0.00	0.47	-0.04
6 top	-1.94	-4.04	0.00	0.00	1.14	0.08
6 a	-1.32	-3.52	0.00	0.00	1.47	-0.24
6 b	1.50	-1.01	0.00	0.00	0.87	-0.21
6 c	4.32	1.20	0.00	0.00	0.44	-0.04
6 bottom	4.59	1.37	0.00	0.00	0.48	0.03

Summary of the results (Minimum)

Section	--- Deadload ---- Moment	Ax.Frc	----- P.T. ------ Moment	Ax.Frc	--- Live load --- Moment	Ax.Frc
1 a	-0.18	0.02	0.00	0.00	-0.02	0.01
1 b	-2.51	0.27	0.00	0.00	-0.32	0.10
1 c	-6.44	0.92	0.00	0.00	-3.00	0.40
1 right	-7.60	1.13	0.00	0.00	-4.49	0.73
2 left	-9.55	0.30	0.00	0.00	-5.45	0.57
2 a	-8.19	-0.02	0.00	0.00	-4.09	0.13
2 b	-1.77	-1.53	0.00	0.00	-0.42	0.31
2 c	3.39	-2.73	0.00	0.00	-0.14	0.10
2 right	-9.55	0.30	0.00	0.00	-5.45	0.57
3 left	-7.60	1.13	0.00	0.00	-4.49	0.73
3 a	-6.44	0.92	0.00	0.00	-3.00	0.40
3 b	-2.51	0.27	0.00	0.00	-0.32	0.10
3 c	-0.18	0.02	0.00	0.00	-0.02	0.01
3 right	0.00	0.00	0.00	0.00	0.00	0.00
4 left	-4.59	0.83	0.00	0.00	-0.48	0.22

VEH: S5 - SUPERLOAD BRUG(5.75.44) page 40
date 11/09/2009; time 13:29:08
Cline Avenue - Load Rating - Single Box 41' Wide

Summary of the results (Minimum)

Section	--- Deadload ---- Moment	Ax.Frc	----- P.T. ------ Moment	Ax.Frc	--- Live load --- Moment	Ax.Frc
4 a	-3.73	1.26	0.00	0.00	-0.45	0.30
4 b	4.43	5.39	0.00	0.00	-0.01	-0.14
4 c	-3.73	1.26	0.00	0.00	-0.45	0.30
4 right	-4.59	0.83	0.00	0.00	-0.48	0.22
5 top	1.94	-4.04	0.00	0.00	-1.14	0.08
5 a	1.32	-3.52	0.00	0.00	-1.47	-0.24
5 b	-1.50	-1.01	0.00	0.00	-0.87	-0.21
5 c	-4.32	1.20	0.00	0.00	-0.44	-0.04
5 bottom	-4.59	1.37	0.00	0.00	-0.48	0.03
6 top	-1.94	-4.04	0.00	0.00	-2.22	-4.05
6 a	-1.32	-3.52	0.00	0.00	-1.33	-5.75
6 b	1.50	-1.01	0.00	0.00	-0.40	-2.00
6 c	4.32	1.20	0.00	0.00	-0.39	-0.03
6 bottom	4.59	1.37	0.00	0.00	-0.47	-0.04

V_B_HL93_truck_EL.OUT 9/11/2009

VEH: HL93- TRUCK BRUG(5.75.44) page 39
date 11/09/2009; time 13:29:09
Cline Avenue - Load Rating - Single Box 41' Wide

Summary of the results (Maximum)

Section	Deadload Moment	Deadload Ax.Frc	P.T. Moment	P.T. Ax.Frc	Live load Moment	Live load Ax.Frc
1 a	-0.18	0.02	0.00	0.00	0.27	0.00
1 b	-2.51	0.27	0.00	0.00	1.56	0.09
1 c	-6.44	0.92	0.00	0.00	0.04	0.05
1 right	-7.60	1.13	0.00	0.00	0.05	0.07
2 left	-9.55	0.30	0.00	0.00	-2.64	-0.43
2 a	-8.19	-0.02	0.00	0.00	-0.27	1.28
2 b	-1.77	-1.53	0.00	0.00	4.51	-0.12
2 c	3.39	-2.73	0.00	0.00	12.05	-2.08
2 right	-9.55	0.30	0.00	0.00	-2.64	-0.43
3 left	-7.60	1.13	0.00	0.00	0.05	0.07
3 a	-6.44	0.92	0.00	0.00	0.04	0.05
3 b	-2.51	0.27	0.00	0.00	1.55	0.08
3 c	-0.18	0.02	0.00	0.00	0.27	0.00
3 right	0.00	0.00	0.00	0.00	0.00	0.00
4 left	-4.59	0.83	0.00	0.00	1.48	0.17
4 a	-3.73	1.26	0.00	0.00	1.40	0.46
4 b	4.43	5.39	0.00	0.00	0.01	0.67
4 c	-3.73	1.26	0.00	0.00	1.40	0.46
4 right	-4.59	0.83	0.00	0.00	1.48	0.17
5 top	1.94	-4.04	0.00	0.00	14.56	-6.15
5 a	1.32	-3.52	0.00	0.00	12.53	-5.32
5 b	-1.50	-1.01	0.00	0.00	5.90	-2.10
5 c	-4.32	1.20	0.00	0.00	1.52	-0.33
5 bottom	-4.59	1.37	0.00	0.00	1.48	-0.14
6 top	-1.94	-4.04	0.00	0.00	4.58	-8.37
6 a	-1.32	-3.52	0.00	0.00	3.97	-7.00
6 b	1.50	-1.01	0.00	0.00	1.45	-2.44
6 c	4.32	1.20	0.00	0.00	1.18	0.08
6 bottom	4.59	1.37	0.00	0.00	1.64	0.13

Summary of the results (Minimum)

Section	Deadload Moment	Deadload Ax.Frc	P.T. Moment	P.T. Ax.Frc	Live load Moment	Live load Ax.Frc
1 a	-0.18	0.02	0.00	0.00	-0.04	0.01
1 b	-2.51	0.27	0.00	0.00	-0.37	0.19
1 c	-6.44	0.92	0.00	0.00	-7.25	1.08
1 right	-7.60	1.13	0.00	0.00	-9.85	1.65
2 left	-9.55	0.30	0.00	0.00	-17.41	-0.89
2 a	-8.19	-0.02	0.00	0.00	-14.79	-1.35
2 b	-1.77	-1.53	0.00	0.00	-5.60	-1.44
2 c	3.39	-2.73	0.00	0.00	0.01	-0.18
2 right	-9.55	0.30	0.00	0.00	-17.41	-0.89
3 left	-7.60	1.13	0.00	0.00	-9.85	1.65
3 a	-6.44	0.92	0.00	0.00	-7.25	1.08
3 b	-2.51	0.27	0.00	0.00	-0.37	0.19
3 c	-0.18	0.02	0.00	0.00	-0.04	0.01
3 right	0.00	0.00	0.00	0.00	0.00	0.00
4 left	-4.59	0.83	0.00	0.00	-1.64	1.47

V_B_HL93_truck_EL.OUT 9/11/2009

VEH: HL93- TRUCK BRUG(5.75.44) page 40
date 11/09/2009; time 13:29:09
Cline Avenue - Load Rating - Single Box 41' Wide

Summary of the results (Minimum)

Section	Deadload Moment	Deadload Ax.Frc	P.T. Moment	P.T. Ax.Frc	Live load Moment	Live load Ax.Frc
4 a	-3.73	1.26	0.00	0.00	-1.56	1.56
4 b	4.43	5.39	0.00	0.00	-0.13	3.13
4 c	-3.73	1.26	0.00	0.00	-1.56	1.56
4 right	-4.59	0.83	0.00	0.00	-1.64	1.47
5 top	1.94	-4.04	0.00	0.00	-4.58	-8.37
5 a	1.32	-3.52	0.00	0.00	-3.97	-7.00
5 b	-1.50	-1.01	0.00	0.00	-1.45	-2.44
5 c	-4.32	1.20	0.00	0.00	-1.18	0.08
5 bottom	-4.59	1.37	0.00	0.00	-1.64	0.13
6 top	-1.94	-4.04	0.00	0.00	-14.56	-6.16
6 a	-1.32	-3.52	0.00	0.00	-12.53	-5.33
6 b	1.50	-1.01	0.00	0.00	-5.90	-2.10
6 c	4.32	1.20	0.00	0.00	-1.52	-0.33
6 bottom	4.59	1.37	0.00	0.00	-1.48	-0.14

VEH: HL93- TANDEM BRUG(5.75.44) page 39
date 11/09/2009; time 13:29:09
Cline Avenue - Load Rating - Single Box 41' Wide

Summary of the results (Maximum)

Section	Deadload Moment	Deadload Ax.Frc	P.T. Moment	P.T. Ax.Frc	Live load Moment	Live load Ax.Frc
1 a	-0.18	0.02	0.00	0.00	0.21	0.01
1 b	-2.51	0.27	0.00	0.00	0.95	0.16
1 c	-6.44	0.92	0.00	0.00	0.01	0.03
1 right	-7.60	1.13	0.00	0.00	0.02	0.04
2 left	-9.55	0.30	0.00	0.00	-1.94	-0.32
2 a	-8.19	-0.02	0.00	0.00	-1.71	1.28
2 b	-1.77	-1.53	0.00	0.00	3.45	-0.12
2 c	3.39	-2.73	0.00	0.00	11.12	-1.80
2 right	-9.55	0.30	0.00	0.00	-1.94	-0.32
3 left	-7.60	1.13	0.00	0.00	0.02	0.04
3 a	-6.44	0.92	0.00	0.00	0.01	0.03
3 b	-2.51	0.27	0.00	0.00	0.95	0.15
3 c	-0.18	0.02	0.00	0.00	0.21	0.01
3 right	0.00	0.00	0.00	0.00	0.00	0.00
4 left	-4.59	0.83	0.00	0.00	1.01	0.39
4 a	-3.73	1.26	0.00	0.00	0.95	0.72
4 b	4.43	5.39	0.00	0.00	0.00	0.65
4 c	-3.73	1.26	0.00	0.00	0.95	0.72
4 right	-4.59	0.83	0.00	0.00	1.01	0.39
5 top	1.94	-4.04	0.00	0.00	14.95	-6.25
5 a	1.32	-3.52	0.00	0.00	12.82	-5.54
5 b	-1.50	-1.01	0.00	0.00	5.70	-2.38
5 c	-4.32	1.20	0.00	0.00	1.11	-0.32
5 bottom	-4.59	1.37	0.00	0.00	1.01	-0.11
6 top	-1.94	-4.04	0.00	0.00	4.08	-7.09
6 a	-1.32	-3.52	0.00	0.00	3.50	-6.17
6 b	1.50	-1.01	0.00	0.00	1.26	-2.56
6 c	4.32	1.20	0.00	0.00	0.84	0.04
6 bottom	4.59	1.37	0.00	0.00	1.21	0.09

Summary of the results (Minimum)

Section	Deadload Moment	Deadload Ax.Frc	P.T. Moment	P.T. Ax.Frc	Live load Moment	Live load Ax.Frc
1 a	-0.18	0.02	0.00	0.00	-0.08	0.02
1 b	-2.51	0.27	0.00	0.00	-0.66	0.26
1 c	-6.44	0.92	0.00	0.00	-8.43	1.30
1 right	-7.60	1.13	0.00	0.00	-11.04	1.76
2 left	-9.55	0.30	0.00	0.00	-19.09	-0.70
2 a	-8.19	-0.02	0.00	0.00	-16.39	-0.92
2 b	-1.77	-1.53	0.00	0.00	-5.61	-1.32
2 c	3.39	-2.73	0.00	0.00	0.02	-0.16
2 right	-9.55	0.30	0.00	0.00	-19.09	-0.70
3 left	-7.60	1.13	0.00	0.00	-11.04	1.76
3 a	-6.44	0.92	0.00	0.00	-8.43	1.30
3 b	-2.51	0.27	0.00	0.00	-0.66	0.26
3 c	-0.18	0.02	0.00	0.00	-0.08	0.02
3 right	0.00	0.00	0.00	0.00	0.00	0.00
4 left	-4.59	0.83	0.00	0.00	-1.21	1.25

VEH: HL93- TANDEM BRUG(5.75.44) page 40
date 11/09/2009; time 13:29:09
Cline Avenue - Load Rating - Single Box 41' Wide

Summary of the results (Minimum)

Section	Deadload Moment	Deadload Ax.Frc	P.T. Moment	P.T. Ax.Frc	Live load Moment	Live load Ax.Frc
4 a	-3.73	1.26	0.00	0.00	-1.14	1.34
4 b	4.43	5.39	0.00	0.00	-0.10	2.92
4 c	-3.73	1.26	0.00	0.00	-1.14	1.34
4 right	-4.59	0.83	0.00	0.00	-1.21	1.25
5 top	1.94	-4.04	0.00	0.00	-4.08	-7.09
5 a	1.32	-3.52	0.00	0.00	-3.50	-6.17
5 b	-1.50	-1.01	0.00	0.00	-1.27	-2.56
5 c	-4.32	1.20	0.00	0.00	-0.84	0.04
5 bottom	-4.59	1.37	0.00	0.00	-1.21	0.09
6 top	-1.94	-4.04	0.00	0.00	-14.95	-6.25
6 a	-1.32	-3.52	0.00	0.00	-12.82	-5.54
6 b	1.50	-1.01	0.00	0.00	-5.70	-2.38
6 c	4.32	1.20	0.00	0.00	-1.11	-0.32
6 bottom	4.59	1.37	0.00	0.00	-1.01	-0.11

VEH: R1 - TOLL ROAD BRUG(5.75.44) page 39
date 11/09/2009; time 13:29:10
Cline Avenue - Load Rating - Single Box 41' Wide

Summary of the results (Maximum)

Section	Deadload Moment	Deadload Ax.Frc	P.T. Moment	P.T. Ax.Frc	Live load Moment	Live load Ax.Frc
1 a	-0.18	0.02	0.00	0.00	0.12	0.01
1 b	-2.51	0.27	0.00	0.00	0.63	0.13
1 c	-6.44	0.92	0.00	0.00	0.05	0.06
1 right	-7.60	1.13	0.00	0.00	0.06	0.08
2 left	-9.55	0.30	0.00	0.00	-1.61	1.56
2 a	-8.19	-0.02	0.00	0.00	0.24	1.31
2 b	-1.77	-1.53	0.00	0.00	3.84	-0.10
2 c	3.39	-2.73	0.00	0.00	10.34	-2.55
2 right	-9.55	0.30	0.00	0.00	-1.61	1.56
3 left	-7.60	1.13	0.00	0.00	0.06	0.08
3 a	-6.44	0.92	0.00	0.00	0.05	0.06
3 b	-2.51	0.27	0.00	0.00	0.63	0.13
3 c	-0.18	0.02	0.00	0.00	0.12	0.01
3 right	0.00	0.00	0.00	0.00	0.00	0.00
4 left	-4.59	0.83	0.00	0.00	1.82	0.18
4 a	-3.73	1.26	0.00	0.00	1.71	0.48
4 b	4.43	5.39	0.00	0.00	0.01	0.81
4 c	-3.73	1.26	0.00	0.00	1.71	0.48
4 right	-4.59	0.83	0.00	0.00	1.82	0.18
5 top	1.94	-4.04	0.00	0.00	16.47	-3.62
5 a	1.32	-3.52	0.00	0.00	14.59	-3.24
5 b	-1.50	-1.01	0.00	0.00	7.18	-1.87
5 c	-4.32	1.20	0.00	0.00	1.87	-0.34
5 bottom	-4.59	1.37	0.00	0.00	1.82	-0.16
6 top	-1.94	-4.04	0.00	0.00	5.32	-5.16
6 a	-1.32	-3.52	0.00	0.00	4.71	-4.43
6 b	1.50	-1.01	0.00	0.00	1.76	-1.84
6 c	4.32	1.20	0.00	0.00	1.44	0.10
6 bottom	4.59	1.37	0.00	0.00	2.01	0.15

Summary of the results (Minimum)

Section	Deadload Moment	Deadload Ax.Frc	P.T. Moment	P.T. Ax.Frc	Live load Moment	Live load Ax.Frc
1 a	-0.18	0.02	0.00	0.00	-0.05	0.01
1 b	-2.51	0.27	0.00	0.00	-0.43	0.23
1 c	-6.44	0.92	0.00	0.00	-6.38	0.92
1 right	-7.60	1.13	0.00	0.00	-8.15	1.25
2 left	-9.55	0.30	0.00	0.00	-18.10	-1.21
2 a	-8.19	-0.02	0.00	0.00	-16.12	-1.65
2 b	-1.77	-1.53	0.00	0.00	-6.52	-1.93
2 c	3.39	-2.73	0.00	0.00	0.04	-0.22
2 right	-9.55	0.30	0.00	0.00	-18.10	-1.21
3 left	-7.60	1.13	0.00	0.00	-8.15	1.25
3 a	-6.44	0.92	0.00	0.00	-6.38	0.92
3 b	-2.51	0.27	0.00	0.00	-0.43	0.23
3 c	-0.18	0.02	0.00	0.00	-0.05	0.01
3 right	0.00	0.00	0.00	0.00	0.00	0.00
4 left	-4.59	0.83	0.00	0.00	-2.01	1.80

VEH: R1 - TOLL ROAD BRUG(5.75.44) page 40
date 11/09/2009; time 13:29:10
Cline Avenue - Load Rating - Single Box 41' Wide

Summary of the results (Minimum)

Section	Deadload Moment	Deadload Ax.Frc	P.T. Moment	P.T. Ax.Frc	Live load Moment	Live load Ax.Frc
4 a	-3.73	1.26	0.00	0.00	-1.91	1.90
4 b	4.43	5.39	0.00	0.00	-0.16	3.84
4 c	-3.73	1.26	0.00	0.00	-1.91	1.90
4 right	-4.59	0.83	0.00	0.00	-2.01	1.79
5 top	1.94	-4.04	0.00	0.00	-5.32	-5.16
5 a	1.32	-3.52	0.00	0.00	-4.71	-4.43
5 b	-1.50	-1.01	0.00	0.00	-1.76	-1.84
5 c	-4.32	1.20	0.00	0.00	-1.44	0.10
5 bottom	-4.59	1.37	0.00	0.00	-2.01	0.15
6 top	-1.94	-4.04	0.00	0.00	-16.47	-3.62
6 a	-1.32	-3.52	0.00	0.00	-14.59	-3.24
6 b	1.50	-1.01	0.00	0.00	-7.18	-1.87
6 c	4.32	1.20	0.00	0.00	-1.87	-0.34
6 bottom	4.59	1.37	0.00	0.00	-1.82	-0.16

VEH: R2 - TOLL ROAD BRUG(5.75.44) page 39
date 11/09/2009; time 13:29:10
Cline Avenue - Load Rating - Single Box 41' Wide

Summary of the results (Maximum)

Section	Deadload Moment	Deadload Ax.Frc	P.T. Moment	P.T. Ax.Frc	Live load Moment	Live load Ax.Frc
1 a	-0.18	0.02	0.00	0.00	0.16	0.00
1 b	-2.51	0.27	0.00	0.00	0.99	0.09
1 c	-6.44	0.92	0.00	0.00	0.05	0.07
1 right	-7.60	1.13	0.00	0.00	0.06	0.09
2 left	-9.55	0.30	0.00	0.00	-1.44	1.44
2 a	-8.19	-0.02	0.00	0.00	0.70	1.15
2 b	-1.77	-1.53	0.00	0.00	3.96	-0.07
2 c	3.39	-2.73	0.00	0.00	9.73	-2.16
2 right	-9.55	0.30	0.00	0.00	-1.44	1.44
3 left	-7.60	1.13	0.00	0.00	0.06	0.09
3 a	-6.44	0.92	0.00	0.00	0.05	0.07
3 b	-2.51	0.27	0.00	0.00	0.97	0.07
3 c	-0.18	0.02	0.00	0.00	0.16	0.00
3 right	0.00	0.00	0.00	0.00	0.00	0.00
4 left	-4.59	0.83	0.00	0.00	1.74	0.03
4 a	-3.73	1.26	0.00	0.00	1.64	0.28
4 b	4.43	5.39	0.00	0.00	0.01	0.66
4 c	-3.73	1.26	0.00	0.00	1.64	0.28
4 right	-4.59	0.83	0.00	0.00	1.74	0.03
5 top	1.94	-4.04	0.00	0.00	13.73	-3.18
5 a	1.32	-3.52	0.00	0.00	12.13	-2.81
5 b	-1.50	-1.01	0.00	0.00	5.90	-1.58
5 c	-4.32	1.20	0.00	0.00	1.75	-0.30
5 bottom	-4.59	1.37	0.00	0.00	1.74	-0.15
6 top	-1.94	-4.04	0.00	0.00	4.79	-5.69
6 a	-1.32	-3.52	0.00	0.00	4.19	-4.73
6 b	1.50	-1.01	0.00	0.00	1.55	-1.67
6 c	4.32	1.20	0.00	0.00	1.38	0.10
6 bottom	4.59	1.37	0.00	0.00	1.89	0.14

Summary of the results (Minimum)

Section	Deadload Moment	Deadload Ax.Frc	P.T. Moment	P.T. Ax.Frc	Live load Moment	Live load Ax.Frc
1 a	-0.18	0.02	0.00	0.00	-0.04	0.01
1 b	-2.51	0.27	0.00	0.00	-0.22	0.14
1 c	-6.44	0.92	0.00	0.00	-5.40	0.76
1 right	-7.60	1.13	0.00	0.00	-7.14	1.14
2 left	-9.55	0.30	0.00	0.00	-14.92	-1.01
2 a	-8.19	-0.02	0.00	0.00	-13.33	-1.42
2 b	-1.77	-1.53	0.00	0.00	-5.60	-1.54
2 c	3.39	-2.73	0.00	0.00	0.03	-0.19
2 right	-9.55	0.30	0.00	0.00	-14.92	-1.01
3 left	-7.60	1.13	0.00	0.00	-7.14	1.14
3 a	-6.44	0.92	0.00	0.00	-5.40	0.76
3 b	-2.51	0.27	0.00	0.00	-0.22	0.14
3 c	-0.18	0.02	0.00	0.00	-0.04	0.01
3 right	0.00	0.00	0.00	0.00	0.00	0.00
4 left	-4.59	0.83	0.00	0.00	-1.89	1.58

VEH: R2 - TOLL ROAD BRUG(5.75.44) page 40
date 11/09/2009; time 13:29:10
Cline Avenue - Load Rating - Single Box 41' Wide

Summary of the results (Minimum)

Section	Deadload Moment	Deadload Ax.Frc	P.T. Moment	P.T. Ax.Frc	Live load Moment	Live load Ax.Frc
4 a	-3.73	1.26	0.00	0.00	-1.79	1.67
4 b	4.43	5.39	0.00	0.00	-0.14	3.16
4 c	-3.73	1.26	0.00	0.00	-1.79	1.67
4 right	-4.59	0.83	0.00	0.00	-1.89	1.58
5 top	1.94	-4.04	0.00	0.00	-4.79	-5.69
5 a	1.32	-3.52	0.00	0.00	-4.19	-4.73
5 b	-1.50	-1.01	0.00	0.00	-1.55	-1.67
5 c	-4.32	1.20	0.00	0.00	-1.38	0.10
5 bottom	-4.59	1.37	0.00	0.00	-1.89	0.14
6 top	-1.94	-4.04	0.00	0.00	-13.73	-3.18
6 a	-1.32	-3.52	0.00	0.00	-12.13	-2.81
6 b	1.50	-1.01	0.00	0.00	-5.90	-1.58
6 c	4.32	1.20	0.00	0.00	-1.75	-0.30
6 bottom	4.59	1.37	0.00	0.00	-1.74	-0.15

VEH: R3 - TOLL ROAD BRUG(5.75.44) page 39
date 11/09/2009; time 13:29:11
Cline Avenue - Load Rating - Single Box 41' Wide

Summary of the results (Maximum)

Section	Deadload Moment	Deadload Ax.Frc	P.T. Moment	P.T. Ax.Frc	Live load Moment	Live load Ax.Frc
1 a	-0.18	0.02	0.00	0.00	0.14	0.00
1 b	-2.51	0.27	0.00	0.00	0.67	0.11
1 c	-6.44	0.92	0.00	0.00	0.04	0.09
1 right	-7.60	1.13	0.00	0.00	0.05	0.12
2 left	-9.55	0.30	0.00	0.00	-1.21	1.43
2 a	-8.19	-0.02	0.00	0.00	0.56	1.20
2 b	-1.77	-1.53	0.00	0.00	3.87	0.00
2 c	3.39	-2.73	0.00	0.00	8.61	-1.86
2 right	-9.55	0.30	0.00	0.00	-1.21	1.43
3 left	-7.60	1.13	0.00	0.00	0.05	0.12
3 a	-6.44	0.92	0.00	0.00	0.04	0.09
3 b	-2.51	0.27	0.00	0.00	0.66	0.11
3 c	-0.18	0.02	0.00	0.00	0.14	0.00
3 right	0.00	0.00	0.00	0.00	0.00	0.00
4 left	-4.59	0.83	0.00	0.00	1.94	-0.13
4 a	-3.73	1.26	0.00	0.00	1.84	0.13
4 b	4.43	5.39	0.00	0.00	0.01	0.58
4 c	-3.73	1.26	0.00	0.00	1.84	0.14
4 right	-4.59	0.83	0.00	0.00	1.94	-0.13
5 top	1.94	-4.04	0.00	0.00	12.91	-3.43
5 a	1.32	-3.52	0.00	0.00	11.29	-3.07
5 b	-1.50	-1.01	0.00	0.00	5.21	-1.36
5 c	-4.32	1.20	0.00	0.00	1.89	-0.33
5 bottom	-4.59	1.37	0.00	0.00	1.94	-0.17
6 top	-1.94	-4.04	0.00	0.00	5.14	-5.06
6 a	-1.32	-3.52	0.00	0.00	4.47	-4.41
6 b	1.50	-1.01	0.00	0.00	1.57	-1.88
6 c	4.32	1.20	0.00	0.00	1.58	0.12
6 bottom	4.59	1.37	0.00	0.00	2.08	0.16

Summary of the results (Minimum)

Section	Deadload Moment	Deadload Ax.Frc	P.T. Moment	P.T. Ax.Frc	Live load Moment	Live load Ax.Frc
1 a	-0.18	0.02	0.00	0.00	-0.03	0.01
1 b	-2.51	0.27	0.00	0.00	-0.29	0.17
1 c	-6.44	0.92	0.00	0.00	-5.97	0.78
1 right	-7.60	1.13	0.00	0.00	-7.80	1.08
2 left	-9.55	0.30	0.00	0.00	-14.63	-1.09
2 a	-8.19	-0.02	0.00	0.00	-13.07	-1.22
2 b	-1.77	-1.53	0.00	0.00	-5.98	-1.44
2 c	3.39	-2.73	0.00	0.00	0.01	-0.18
2 right	-9.55	0.30	0.00	0.00	-14.63	-1.09
3 left	-7.60	1.13	0.00	0.00	-7.80	1.08
3 a	-6.44	0.92	0.00	0.00	-5.96	0.78
3 b	-2.51	0.27	0.00	0.00	-0.29	0.17
3 c	-0.18	0.02	0.00	0.00	-0.03	0.01
3 right	0.00	0.00	0.00	0.00	0.00	0.00
4 left	-4.59	0.83	0.00	0.00	-2.08	1.59

VEH: R3 - TOLL ROAD BRUG(5.75.44) page 40
date 11/09/2009; time 13:29:11
Cline Avenue - Load Rating - Single Box 41' Wide

Summary of the results (Minimum)

Section	Deadload Moment	Deadload Ax.Frc	P.T. Moment	P.T. Ax.Frc	Live load Moment	Live load Ax.Frc
4 a	-3.73	1.26	0.00	0.00	-1.97	1.66
4 b	4.43	5.39	0.00	0.00	-0.12	2.69
4 c	-3.73	1.26	0.00	0.00	-1.97	1.66
4 right	-4.59	0.83	0.00	0.00	-2.08	1.59
5 top	1.94	-4.04	0.00	0.00	-5.14	-5.06
5 a	1.32	-3.52	0.00	0.00	-4.47	-4.41
5 b	-1.50	-1.01	0.00	0.00	-1.57	-1.88
5 c	-4.32	1.20	0.00	0.00	-1.58	0.12
5 bottom	-4.59	1.37	0.00	0.00	-2.08	0.16
6 top	-1.94	-4.04	0.00	0.00	-12.91	-3.43
6 a	-1.32	-3.52	0.00	0.00	-11.29	-3.07
6 b	1.50	-1.01	0.00	0.00	-5.21	-1.36
6 c	4.32	1.20	0.00	0.00	-1.89	-0.33
6 bottom	4.59	1.37	0.00	0.00	-1.94	-0.17

V_B_R4_EL.OUT 9/11/2009

VEH: R4 - MICHIGAN T BRUG(5.75.44) page 39
date 11/09/2009; time 13:29:11
Cline Avenue - Load Rating - Single Box 41' Wide

Summary of the results (Maximum)

Section	--- Deadload ----		----- P.T. ------		--- Live load ---	
	Moment	Ax.Frc	Moment	Ax.Frc	Moment	Ax.Frc
1 a	-0.18	0.02	0.00	0.00	0.11	0.00
1 b	-2.51	0.27	0.00	0.00	0.72	0.08
1 c	-6.44	0.92	0.00	0.00	0.13	0.42
1 right	-7.60	1.13	0.00	0.00	0.12	0.29
2 left	-9.55	0.30	0.00	0.00	0.38	1.45
2 a	-8.19	-0.02	0.00	0.00	2.01	1.24
2 b	-1.77	-1.53	0.00	0.00	4.39	-0.02
2 c	3.39	-2.73	0.00	0.00	9.02	-2.55
2 right	-9.55	0.30	0.00	0.00	0.38	1.45
3 left	-7.60	1.13	0.00	0.00	0.12	0.29
3 a	-6.44	0.92	0.00	0.00	0.09	0.24
3 b	-2.51	0.27	0.00	0.00	0.72	0.08
3 c	-0.18	0.02	0.00	0.00	0.11	0.00
3 right	0.00	0.00	0.00	0.00	0.00	0.00
4 left	-4.59	0.83	0.00	0.00	2.44	-0.21
4 a	-3.73	1.26	0.00	0.00	2.31	0.03
4 b	4.43	5.39	0.00	0.00	0.01	0.73
4 c	-3.73	1.26	0.00	0.00	2.31	0.03
4 right	-4.59	0.83	0.00	0.00	2.44	-0.21
5 top	1.94	-4.04	0.00	0.00	14.93	-2.75
5 a	1.32	-3.52	0.00	0.00	13.36	-2.44
5 b	-1.50	-1.01	0.00	0.00	6.64	-1.10
5 c	-4.32	1.20	0.00	0.00	2.39	-0.34
5 bottom	-4.59	1.37	0.00	0.00	2.44	-0.21
6 top	-1.94	-4.04	0.00	0.00	5.99	-4.45
6 a	-1.32	-3.52	0.00	0.00	5.26	-3.69
6 b	1.50	-1.01	0.00	0.00	1.93	-1.35
6 c	4.32	1.20	0.00	0.00	1.94	0.15
6 bottom	4.59	1.37	0.00	0.00	2.59	0.20

Summary of the results (Minimum)

Section	--- Deadload ----		----- P.T. ------		--- Live load ---	
	Moment	Ax.Frc	Moment	Ax.Frc	Moment	Ax.Frc
1 a	-0.18	0.02	0.00	0.00	-0.03	0.01
1 b	-2.51	0.27	0.00	0.00	-0.04	0.10
1 c	-6.44	0.92	0.00	0.00	-4.49	0.53
1 right	-7.60	1.13	0.00	0.00	-5.76	0.81
2 left	-9.55	0.30	0.00	0.00	-15.15	-1.57
2 a	-8.19	-0.02	0.00	0.00	-13.60	-1.77
2 b	-1.77	-1.53	0.00	0.00	-6.61	-1.90
2 c	3.39	-2.73	0.00	0.00	0.03	-0.23
2 right	-9.55	0.30	0.00	0.00	-15.15	-1.57
3 left	-7.60	1.13	0.00	0.00	-5.76	0.81
3 a	-6.44	0.92	0.00	0.00	-4.49	0.53
3 b	-2.51	0.27	0.00	0.00	-0.04	0.10
3 c	-0.18	0.02	0.00	0.00	-0.03	0.01
3 right	0.00	0.00	0.00	0.00	0.00	0.00
4 left	-4.59	0.83	0.00	0.00	-2.59	1.98

V_B_R4_EL.OUT 9/11/2009

VEH: R4 - MICHIGAN T BRUG(5.75.44) page 40
date 11/09/2009; time 13:29:11
Cline Avenue - Load Rating - Single Box 41' Wide

Summary of the results (Minimum)

Section	--- Deadload ----		----- P.T. ------		--- Live load ---	
	Moment	Ax.Frc	Moment	Ax.Frc	Moment	Ax.Frc
4 a	-3.73	1.26	0.00	0.00	-2.46	2.07
4 b	4.43	5.39	0.00	0.00	-0.17	3.54
4 c	-3.73	1.26	0.00	0.00	-2.46	2.07
4 right	-4.59	0.83	0.00	0.00	-2.59	1.98
5 top	1.94	-4.04	0.00	0.00	-5.99	-4.45
5 a	1.32	-3.52	0.00	0.00	-5.26	-3.69
5 b	-1.50	-1.01	0.00	0.00	-1.93	-1.35
5 c	-4.32	1.20	0.00	0.00	-1.95	0.15
5 bottom	-4.59	1.37	0.00	0.00	-2.59	0.20
6 top	-1.94	-4.04	0.00	0.00	-14.93	-2.75
6 a	-1.32	-3.52	0.00	0.00	-13.36	-2.44
6 b	1.50	-1.01	0.00	0.00	-6.64	-1.10
6 c	4.32	1.20	0.00	0.00	-2.39	-0.34
6 bottom	4.59	1.37	0.00	0.00	-2.44	-0.21

VEH: R5 - MICHIGAN T BRUG(5.75.44) page 39
date 11/09/2009; time 13:29:12
Cline Avenue - Load Rating - Single Box 41' Wide

Summary of the results (Maximum)

Section	--- Deadload ----		----- P.T. ------		--- Live load ---	
	Moment	Ax.Frc	Moment	Ax.Frc	Moment	Ax.Frc
1 a	-0.18	0.02	0.00	0.00	0.02	0.01
1 b	-2.51	0.27	0.00	0.00	0.03	0.15
1 c	-6.44	0.92	0.00	0.00	0.07	0.10
1 right	-7.60	1.13	0.00	0.00	0.08	0.13
2 left	-9.55	0.30	0.00	0.00	-0.06	1.64
2 a	-8.19	-0.02	0.00	0.00	0.95	1.48
2 b	-1.77	-1.53	0.00	0.00	3.96	-0.05
2 c	3.39	-2.73	0.00	0.00	9.28	-2.92
2 right	-9.55	0.30	0.00	0.00	-0.06	1.64
3 left	-7.60	1.13	0.00	0.00	0.08	0.13
3 a	-6.44	0.92	0.00	0.00	0.07	0.10
3 b	-2.51	0.27	0.00	0.00	0.02	0.03
3 c	-0.18	0.02	0.00	0.00	0.02	0.01
3 right	0.00	0.00	0.00	0.00	0.00	0.00
4 left	-4.59	0.83	0.00	0.00	2.50	-0.02
4 a	-3.73	1.26	0.00	0.00	2.36	0.30
4 b	4.43	5.39	0.00	0.00	0.01	0.89
4 c	-3.73	1.26	0.00	0.00	2.36	0.30
4 right	-4.59	0.83	0.00	0.00	2.50	-0.02
5 top	1.94	-4.04	0.00	0.00	18.26	-3.55
5 a	1.32	-3.52	0.00	0.00	16.29	-3.21
5 b	-1.50	-1.01	0.00	0.00	7.98	-1.89
5 c	-4.32	1.20	0.00	0.00	2.49	-0.39
5 bottom	-4.59	1.37	0.00	0.00	2.50	-0.21
6 top	-1.94	-4.04	0.00	0.00	6.74	-3.55
6 a	-1.32	-3.52	0.00	0.00	5.89	-3.26
6 b	1.50	-1.01	0.00	0.00	2.16	-1.69
6 c	4.32	1.20	0.00	0.00	2.00	0.15
6 bottom	4.59	1.37	0.00	0.00	2.70	0.21

Summary of the results (Minimum)

Section	--- Deadload ----		----- P.T. ------		--- Live load ---	
	Moment	Ax.Frc	Moment	Ax.Frc	Moment	Ax.Frc
1 a	-0.18	0.02	0.00	0.00	-0.04	0.01
1 b	-2.51	0.27	0.00	0.00	-0.98	0.23
1 c	-6.44	0.92	0.00	0.00	-6.30	0.80
1 right	-7.60	1.13	0.00	0.00	-7.76	0.98
2 left	-9.55	0.30	0.00	0.00	-19.41	-1.75
2 a	-8.19	-0.02	0.00	0.00	-17.41	-1.90
2 b	-1.77	-1.53	0.00	0.00	-7.85	-2.30
2 c	3.39	-2.73	0.00	0.00	0.04	-0.26
2 right	-9.55	0.30	0.00	0.00	-19.41	-1.75
3 left	-7.60	1.13	0.00	0.00	-7.76	0.98
3 a	-6.44	0.92	0.00	0.00	-6.30	0.80
3 b	-2.51	0.27	0.00	0.00	-0.98	0.23
3 c	-0.18	0.02	0.00	0.00	-0.04	0.01
3 right	0.00	0.00	0.00	0.00	0.00	0.00
4 left	-4.59	0.83	0.00	0.00	-2.70	2.21

VEH: R5 - MICHIGAN T BRUG(5.75.44) page 40
date 11/09/2009; time 13:29:12
Cline Avenue - Load Rating - Single Box 41' Wide

Summary of the results (Minimum)

Section	--- Deadload ----		----- P.T. ------		--- Live load ---	
	Moment	Ax.Frc	Moment	Ax.Frc	Moment	Ax.Frc
4 a	-3.73	1.26	0.00	0.00	-2.56	2.32
4 b	4.43	5.39	0.00	0.00	-0.19	4.24
4 c	-3.73	1.26	0.00	0.00	-2.56	2.32
4 right	-4.59	0.83	0.00	0.00	-2.70	2.21
5 top	1.94	-4.04	0.00	0.00	-6.74	-3.55
5 a	1.32	-3.52	0.00	0.00	-5.89	-3.26
5 b	-1.50	-1.01	0.00	0.00	-2.16	-1.69
5 c	-4.32	1.20	0.00	0.00	-2.00	0.15
5 bottom	-4.59	1.37	0.00	0.00	-2.70	0.21
6 top	-1.94	-4.04	0.00	0.00	-18.26	-3.55
6 a	-1.32	-3.52	0.00	0.00	-16.29	-3.21
6 b	1.50	-1.01	0.00	0.00	-7.98	-1.89
6 c	4.32	1.20	0.00	0.00	-2.49	-0.39
6 bottom	4.59	1.37	0.00	0.00	-2.50	-0.21

VEH: S1 - SPECIAL TR BRUG(5.75.44) page 39
date 11/09/2009; time 13:29:12
Cline Avenue - Load Rating - Single Box 41' Wide

Summary of the results (Maximum)

Section	--- Deadload ----		----- P.T. ------		--- Live load ---	
	Moment	Ax.Frc	Moment	Ax.Frc	Moment	Ax.Frc
1 a	-0.18	0.02	0.00	0.00	0.20	0.01
1 b	-2.51	0.27	0.00	0.00	0.99	0.14
1 c	-6.44	0.92	0.00	0.00	0.05	0.08
1 right	-7.60	1.13	0.00	0.00	0.06	0.10
2 left	-9.55	0.30	0.00	0.00	-2.63	1.76
2 a	-8.19	-0.02	0.00	0.00	-0.11	1.47
2 b	-1.77	-1.53	0.00	0.00	4.54	-0.10
2 c	3.39	-2.73	0.00	0.00	11.75	-2.51
2 right	-9.55	0.30	0.00	0.00	-2.63	1.76
3 left	-7.60	1.13	0.00	0.00	0.06	0.10
3 a	-6.44	0.92	0.00	0.00	0.05	0.08
3 b	-2.51	0.27	0.00	0.00	0.97	0.12
3 c	-0.18	0.02	0.00	0.00	0.20	0.00
3 right	0.00	0.00	0.00	0.00	0.00	0.00
4 left	-4.59	0.83	0.00	0.00	1.95	0.12
4 a	-3.73	1.26	0.00	0.00	1.84	0.46
4 b	4.43	5.39	0.00	0.00	0.01	0.79
4 c	-3.73	1.26	0.00	0.00	1.84	0.46
4 right	-4.59	0.83	0.00	0.00	1.95	0.12
5 top	1.94	-4.04	0.00	0.00	16.86	-4.47
5 a	1.32	-3.52	0.00	0.00	14.77	-4.00
5 b	-1.50	-1.01	0.00	0.00	7.01	-2.32
5 c	-4.32	1.20	0.00	0.00	1.97	-0.39
5 bottom	-4.59	1.37	0.00	0.00	1.95	-0.18
6 top	-1.94	-4.04	0.00	0.00	5.77	-6.90
6 a	-1.32	-3.52	0.00	0.00	5.03	-5.94
6 b	1.50	-1.01	0.00	0.00	1.81	-2.44
6 c	4.32	1.20	0.00	0.00	1.56	0.11
6 bottom	4.59	1.37	0.00	0.00	2.14	0.16

Summary of the results (Minimum)

Section	--- Deadload ----		----- P.T. ------		--- Live load ---	
	Moment	Ax.Frc	Moment	Ax.Frc	Moment	Ax.Frc
1 a	-0.18	0.02	0.00	0.00	-0.05	0.01
1 b	-2.51	0.27	0.00	0.00	-0.41	0.23
1 c	-6.44	0.92	0.00	0.00	-7.87	1.10
1 right	-7.60	1.13	0.00	0.00	-10.22	1.54
2 left	-9.55	0.30	0.00	0.00	-19.62	-1.10
2 a	-8.19	-0.02	0.00	0.00	-17.12	-1.61
2 b	-1.77	-1.53	0.00	0.00	-6.98	-1.93
2 c	3.39	-2.73	0.00	0.00	0.02	-0.22
2 right	-9.55	0.30	0.00	0.00	-19.62	-1.10
3 left	-7.60	1.13	0.00	0.00	-10.22	1.54
3 a	-6.44	0.92	0.00	0.00	-7.87	1.10
3 b	-2.51	0.27	0.00	0.00	-0.41	0.23
3 c	-0.18	0.02	0.00	0.00	-0.05	0.01
3 right	0.00	0.00	0.00	0.00	0.00	0.00
4 left	-4.59	0.83	0.00	0.00	-2.14	1.83

VEH: S1 - SPECIAL TR BRUG(5.75.44) page 40
date 11/09/2009; time 13:29:12
Cline Avenue - Load Rating - Single Box 41' Wide

Summary of the results (Minimum)

Section	--- Deadload ----		----- P.T. ------		--- Live load ---	
	Moment	Ax.Frc	Moment	Ax.Frc	Moment	Ax.Frc
4 a	-3.73	1.26	0.00	0.00	-2.02	1.93
4 b	4.43	5.39	0.00	0.00	-0.16	3.68
4 c	-3.73	1.26	0.00	0.00	-2.02	1.93
4 right	-4.59	0.83	0.00	0.00	-2.14	1.83
5 top	1.94	-4.04	0.00	0.00	-5.77	-6.90
5 a	1.32	-3.52	0.00	0.00	-5.03	-5.94
5 b	-1.50	-1.01	0.00	0.00	-1.81	-2.44
5 c	-4.32	1.20	0.00	0.00	-1.56	0.11
5 bottom	-4.59	1.37	0.00	0.00	-2.14	0.16
6 top	-1.94	-4.04	0.00	0.00	-16.86	-4.47
6 a	-1.32	-3.52	0.00	0.00	-14.77	-4.00
6 b	1.50	-1.01	0.00	0.00	-7.01	-2.32
6 c	4.32	1.20	0.00	0.00	-1.97	-0.39
6 bottom	4.59	1.37	0.00	0.00	-1.95	-0.18

VEH: S2 - SPECIAL TR BRUG(5.75.44) page 39
date 11/09/2009; time 13:29:13
Cline Avenue - Load Rating - Single Box 41' Wide

Summary of the results (Maximum)

Section	Deadload Moment	Deadload Ax.Frc	P.T. Moment	P.T. Ax.Frc	Live load Moment	Live load Ax.Frc
1 a	-0.18	0.02	0.00	0.00	0.16	0.01
1 b	-2.51	0.27	0.00	0.00	0.80	0.15
1 c	-6.44	0.92	0.00	0.00	0.04	0.07
1 right	-7.60	1.13	0.00	0.00	0.05	0.08
2 left	-9.55	0.30	0.00	0.00	-2.32	1.66
2 a	-8.19	-0.02	0.00	0.00	-0.12	1.37
2 b	-1.77	-1.53	0.00	0.00	4.06	-0.09
2 c	3.39	-2.73	0.00	0.00	11.19	-2.41
2 right	-9.55	0.30	0.00	0.00	-2.32	1.66
3 left	-7.60	1.13	0.00	0.00	0.05	0.08
3 a	-6.44	0.92	0.00	0.00	0.04	0.07
3 b	-2.51	0.27	0.00	0.00	0.80	0.15
3 c	-0.18	0.02	0.00	0.00	0.16	0.01
3 right	0.00	0.00	0.00	0.00	0.00	0.00
4 left	-4.59	0.83	0.00	0.00	1.76	0.20
4 a	-3.73	1.26	0.00	0.00	1.66	0.52
4 b	4.43	5.39	0.00	0.00	0.01	0.79
4 c	-3.73	1.26	0.00	0.00	1.66	0.52
4 right	-4.59	0.83	0.00	0.00	1.76	0.20
5 top	1.94	-4.04	0.00	0.00	16.50	-4.09
5 a	1.32	-3.52	0.00	0.00	14.50	-3.66
5 b	-1.50	-1.01	0.00	0.00	6.98	-2.10
5 c	-4.32	1.20	0.00	0.00	1.81	-0.35
5 bottom	-4.59	1.37	0.00	0.00	1.76	-0.16
6 top	-1.94	-4.04	0.00	0.00	5.31	-5.94
6 a	-1.32	-3.52	0.00	0.00	4.71	-5.07
6 b	1.50	-1.01	0.00	0.00	1.73	-2.07
6 c	4.32	1.20	0.00	0.00	1.42	0.09
6 bottom	4.59	1.37	0.00	0.00	1.97	0.15

Summary of the results (Minimum)

Section	Deadload Moment	Deadload Ax.Frc	P.T. Moment	P.T. Ax.Frc	Live load Moment	Live load Ax.Frc
1 a	-0.18	0.02	0.00	0.00	-0.06	0.01
1 b	-2.51	0.27	0.00	0.00	-0.46	0.22
1 c	-6.44	0.92	0.00	0.00	-7.32	1.06
1 right	-7.60	1.13	0.00	0.00	-9.41	1.46
2 left	-9.55	0.30	0.00	0.00	-19.14	-1.08
2 a	-8.19	-0.02	0.00	0.00	-16.80	-1.54
2 b	-1.77	-1.53	0.00	0.00	-6.73	-1.84
2 c	3.39	-2.73	0.00	0.00	0.03	-0.21
2 right	-9.55	0.30	0.00	0.00	-19.14	-1.08
3 left	-7.60	1.13	0.00	0.00	-9.41	1.46
3 a	-6.44	0.92	0.00	0.00	-7.32	1.06
3 b	-2.51	0.27	0.00	0.00	-0.46	0.22
3 c	-0.18	0.02	0.00	0.00	-0.06	0.01
3 right	0.00	0.00	0.00	0.00	0.00	0.00
4 left	-4.59	0.83	0.00	0.00	-1.97	1.75

VEH: S2 - SPECIAL TR BRUG(5.75.44) page 40
date 11/09/2009; time 13:29:13
Cline Avenue - Load Rating - Single Box 41' Wide

Summary of the results (Minimum)

Section	Deadload Moment	Deadload Ax.Frc	P.T. Moment	P.T. Ax.Frc	Live load Moment	Live load Ax.Frc
4 a	-3.73	1.26	0.00	0.00	-1.86	1.85
4 b	4.43	5.39	0.00	0.00	-0.15	3.66
4 c	-3.73	1.26	0.00	0.00	-1.86	1.85
4 right	-4.59	0.83	0.00	0.00	-1.97	1.75
5 top	1.94	-4.04	0.00	0.00	-5.31	-5.94
5 a	1.32	-3.52	0.00	0.00	-4.71	-5.07
5 b	-1.50	-1.01	0.00	0.00	-1.73	-2.07
5 c	-4.32	1.20	0.00	0.00	-1.42	0.09
5 bottom	-4.59	1.37	0.00	0.00	-1.97	0.15
6 top	-1.94	-4.04	0.00	0.00	-16.50	-4.09
6 a	-1.32	-3.52	0.00	0.00	-14.51	-3.66
6 b	1.50	-1.01	0.00	0.00	-6.98	-2.10
6 c	4.32	1.20	0.00	0.00	-1.81	-0.35
6 bottom	4.59	1.37	0.00	0.00	-1.76	-0.16

VEH: S3 - SPECIAL TR BRUG(5.75.44) page 39
date 11/09/2009; time 13:29:13
Cline Avenue - Load Rating - Single Box 41' Wide

Summary of the results (Maximum)

Section	--- Deadload ----		----- P.T. ------		--- Live load ---	
	Moment	Ax.Frc	Moment	Ax.Frc	Moment	Ax.Frc
1 a	-0.18	0.02	0.00	0.00	0.18	0.01
1 b	-2.51	0.27	0.00	0.00	0.83	0.20
1 c	-6.44	0.92	0.00	0.00	0.04	0.09
1 right	-7.60	1.13	0.00	0.00	0.05	0.11
2 left	-9.55	0.30	0.00	0.00	-2.54	2.00
2 a	-8.19	-0.02	0.00	0.00	-0.06	1.69
2 b	-1.77	-1.53	0.00	0.00	4.84	-0.07
2 c	3.39	-2.73	0.00	0.00	13.35	-2.83
2 right	-9.55	0.30	0.00	0.00	-2.54	2.00
3 left	-7.60	1.13	0.00	0.00	0.05	0.11
3 a	-6.44	0.92	0.00	0.00	0.04	0.09
3 b	-2.51	0.27	0.00	0.00	0.83	0.20
3 c	-0.18	0.02	0.00	0.00	0.17	0.01
3 right	0.00	0.00	0.00	0.00	0.00	0.00
4 left	-4.59	0.83	0.00	0.00	2.18	0.23
4 a	-3.73	1.26	0.00	0.00	2.06	0.62
4 b	4.43	5.39	0.00	0.00	0.01	0.97
4 c	-3.73	1.26	0.00	0.00	2.06	0.62
4 right	-4.59	0.83	0.00	0.00	2.18	0.23
5 top	1.94	-4.04	0.00	0.00	20.11	-4.88
5 a	1.32	-3.52	0.00	0.00	17.70	-4.37
5 b	-1.50	-1.01	0.00	0.00	8.49	-2.51
5 c	-4.32	1.20	0.00	0.00	2.24	-0.43
5 bottom	-4.59	1.37	0.00	0.00	2.18	-0.20
6 top	-1.94	-4.04	0.00	0.00	6.64	-6.75
6 a	-1.32	-3.52	0.00	0.00	5.79	-5.79
6 b	1.50	-1.01	0.00	0.00	2.13	-2.43
6 c	4.32	1.20	0.00	0.00	1.78	0.12
6 bottom	4.59	1.37	0.00	0.00	2.45	0.19

Summary of the results (Minimum)

Section	--- Deadload ----		----- P.T. ------		--- Live load ---	
	Moment	Ax.Frc	Moment	Ax.Frc	Moment	Ax.Frc
1 a	-0.18	0.02	0.00	0.00	-0.09	0.02
1 b	-2.51	0.27	0.00	0.00	-0.64	0.34
1 c	-6.44	0.92	0.00	0.00	-8.85	1.30
1 right	-7.60	1.13	0.00	0.00	-11.28	1.76
2 left	-9.55	0.30	0.00	0.00	-23.34	-1.26
2 a	-8.19	-0.02	0.00	0.00	-20.63	-1.81
2 b	-1.77	-1.53	0.00	0.00	-8.35	-2.19
2 c	3.39	-2.73	0.00	0.00	0.05	-0.25
2 right	-9.55	0.30	0.00	0.00	-23.34	-1.26
3 left	-7.60	1.13	0.00	0.00	-11.28	1.76
3 a	-6.44	0.92	0.00	0.00	-8.85	1.30
3 b	-2.51	0.27	0.00	0.00	-0.64	0.34
3 c	-0.18	0.02	0.00	0.00	-0.09	0.02
3 right	0.00	0.00	0.00	0.00	0.00	0.00
4 left	-4.59	0.83	0.00	0.00	-2.45	2.16

VEH: S3 - SPECIAL TR BRUG(5.75.44) page 40
date 11/09/2009; time 13:29:13
Cline Avenue - Load Rating - Single Box 41' Wide

Summary of the results (Minimum)

Section	--- Deadload ----		----- P.T. ------		--- Live load ---	
	Moment	Ax.Frc	Moment	Ax.Frc	Moment	Ax.Frc
4 a	-3.73	1.26	0.00	0.00	-2.32	2.28
4 b	4.43	5.39	0.00	0.00	-0.17	4.45
4 c	-3.73	1.26	0.00	0.00	-2.32	2.28
4 right	-4.59	0.83	0.00	0.00	-2.45	2.16
5 top	1.94	-4.04	0.00	0.00	-6.64	-6.75
5 a	1.32	-3.52	0.00	0.00	-5.79	-5.79
5 b	-1.50	-1.01	0.00	0.00	-2.13	-2.43
5 c	-4.32	1.20	0.00	0.00	-1.78	0.12
5 bottom	-4.59	1.37	0.00	0.00	-2.45	0.19
6 top	-1.94	-4.04	0.00	0.00	-20.11	-4.89
6 a	-1.32	-3.52	0.00	0.00	-17.70	-4.37
6 b	1.50	-1.01	0.00	0.00	-8.49	-2.51
6 c	4.32	1.20	0.00	0.00	-2.24	-0.43
6 bottom	4.59	1.37	0.00	0.00	-2.18	-0.20

VEH: S4 - SUPER LOAD BRUG(5.75.44) page 39
date 11/09/2009; time 13:29:14
Cline Avenue - Load Rating - Single Box 41' Wide

Summary of the results (Maximum)

Section	--- Deadload ---- Moment	Ax.Frc	----- P.T. ------ Moment	Ax.Frc	--- Live load --- Moment	Ax.Frc
1 a	-0.18	0.02	0.00	0.00	0.13	0.00
1 b	-2.51	0.27	0.00	0.00	0.64	0.10
1 c	-6.44	0.92	0.00	0.00	0.03	0.06
1 right	-7.60	1.13	0.00	0.00	0.04	0.08
2 left	-9.55	0.30	0.00	0.00	-1.65	1.28
2 a	-8.19	-0.02	0.00	0.00	0.05	1.06
2 b	-1.77	-1.53	0.00	0.00	3.25	-0.05
2 c	3.39	-2.73	0.00	0.00	8.24	-1.78
2 right	-9.55	0.30	0.00	0.00	-1.65	1.28
3 left	-7.60	1.13	0.00	0.00	0.04	0.08
3 a	-6.44	0.92	0.00	0.00	0.03	0.06
3 b	-2.51	0.27	0.00	0.00	0.64	0.10
3 c	-0.18	0.02	0.00	0.00	0.13	0.00
3 right	0.00	0.00	0.00	0.00	0.00	0.00
4 left	-4.59	0.83	0.00	0.00	1.47	0.06
4 a	-3.73	1.26	0.00	0.00	1.38	0.30
4 b	4.43	5.39	0.00	0.00	0.01	0.57
4 c	-3.73	1.26	0.00	0.00	1.38	0.30
4 right	-4.59	0.83	0.00	0.00	1.47	0.06
5 top	1.94	-4.04	0.00	0.00	12.16	-3.14
5 a	1.32	-3.52	0.00	0.00	10.67	-2.80
5 b	-1.50	-1.01	0.00	0.00	5.06	-1.62
5 c	-4.32	1.20	0.00	0.00	1.48	-0.28
5 bottom	-4.59	1.37	0.00	0.00	1.47	-0.13
6 top	-1.94	-4.04	0.00	0.00	4.21	-4.74
6 a	-1.32	-3.52	0.00	0.00	3.69	-4.10
6 b	1.50	-1.01	0.00	0.00	1.33	-1.71
6 c	4.32	1.20	0.00	0.00	1.18	0.08
6 bottom	4.59	1.37	0.00	0.00	1.61	0.12

Summary of the results (Minimum)

Section	--- Deadload ---- Moment	Ax.Frc	----- P.T. ------ Moment	Ax.Frc	--- Live load --- Moment	Ax.Frc
1 a	-0.18	0.02	0.00	0.00	-0.04	0.01
1 b	-2.51	0.27	0.00	0.00	-0.30	0.16
1 c	-6.44	0.92	0.00	0.00	-5.51	0.77
1 right	-7.60	1.13	0.00	0.00	-7.18	1.07
2 left	-9.55	0.30	0.00	0.00	-13.97	-0.79
2 a	-8.19	-0.02	0.00	0.00	-12.30	-1.15
2 b	-1.77	-1.53	0.00	0.00	-5.10	-1.39
2 c	3.39	-2.73	0.00	0.00	0.02	-0.16
2 right	-9.55	0.30	0.00	0.00	-13.97	-0.79
3 left	-7.60	1.13	0.00	0.00	-7.18	1.07
3 a	-6.44	0.92	0.00	0.00	-5.51	0.77
3 b	-2.51	0.27	0.00	0.00	-0.30	0.16
3 c	-0.18	0.02	0.00	0.00	-0.04	0.01
3 right	0.00	0.00	0.00	0.00	0.00	0.00
4 left	-4.59	0.83	0.00	0.00	-1.61	1.35

VEH: S4 - SUPER LOAD BRUG(5.75.44) page 40
date 11/09/2009; time 13:29:14
Cline Avenue - Load Rating - Single Box 41' Wide

Summary of the results (Minimum)

Section	--- Deadload ---- Moment	Ax.Frc	----- P.T. ------ Moment	Ax.Frc	--- Live load --- Moment	Ax.Frc
4 a	-3.73	1.26	0.00	0.00	-1.52	1.42
4 b	4.43	5.39	0.00	0.00	-0.11	2.67
4 c	-3.73	1.26	0.00	0.00	-1.52	1.42
4 right	-4.59	0.83	0.00	0.00	-1.61	1.35
5 top	1.94	-4.04	0.00	0.00	-4.21	-4.74
5 a	1.32	-3.52	0.00	0.00	-3.69	-4.10
5 b	-1.50	-1.01	0.00	0.00	-1.33	-1.71
5 c	-4.32	1.20	0.00	0.00	-1.18	0.08
5 bottom	-4.59	1.37	0.00	0.00	-1.61	0.12
6 top	-1.94	-4.04	0.00	0.00	-12.16	-3.14
6 a	-1.32	-3.52	0.00	0.00	-10.67	-2.80
6 b	1.50	-1.01	0.00	0.00	-5.06	-1.62
6 c	4.32	1.20	0.00	0.00	-1.48	-0.28
6 bottom	4.59	1.37	0.00	0.00	-1.47	-0.13

VEH: S5 - SUPERLOAD BRUG(5.75.44) page 39
date 11/09/2009; time 13:29:14
Cline Avenue - Load Rating - Single Box 41' Wide

Summary of the results (Maximum)

Section	--- Deadload ---		----- P.T. ------		--- Live load ---	
	Moment	Ax.Frc	Moment	Ax.Frc	Moment	Ax.Frc
1 a	-0.18	0.02	0.00	0.00	0.30	0.00
1 b	-2.51	0.27	0.00	0.00	1.50	0.02
1 c	-6.44	0.92	0.00	0.00	-0.03	-0.03
1 right	-7.60	1.13	0.00	0.00	-0.04	-0.03
2 left	-9.55	0.30	0.00	0.00	1.81	0.46
2 a	-8.19	-0.02	0.00	0.00	1.67	0.46
2 b	-1.77	-1.53	0.00	0.00	2.56	0.24
2 c	3.39	-2.73	0.00	0.00	5.12	0.60
2 right	-9.55	0.30	0.00	0.00	1.81	0.46
3 left	-7.60	1.13	0.00	0.00	-0.04	-0.03
3 a	-6.44	0.92	0.00	0.00	-0.03	-0.03
3 b	-2.51	0.27	0.00	0.00	1.50	0.02
3 c	-0.18	0.02	0.00	0.00	0.30	0.00
3 right	0.00	0.00	0.00	0.00	0.00	0.00
4 left	-4.59	0.83	0.00	0.00	0.68	-0.46
4 a	-3.73	1.26	0.00	0.00	0.65	-0.47
4 b	4.43	5.39	0.00	0.00	0.05	-0.82
4 c	-3.73	1.26	0.00	0.00	0.65	-0.47
4 right	-4.59	0.83	0.00	0.00	0.68	-0.46
5 top	1.94	-4.04	0.00	0.00	2.22	-4.05
5 a	1.32	-3.52	0.00	0.00	1.33	-5.75
5 b	-1.50	-1.01	0.00	0.00	0.40	-2.00
5 c	-4.32	1.20	0.00	0.00	0.51	-0.05
5 bottom	-4.59	1.37	0.00	0.00	0.68	-0.05
6 top	-1.94	-4.04	0.00	0.00	2.61	-0.28
6 a	-1.32	-3.52	0.00	0.00	2.45	-0.25
6 b	1.50	-1.01	0.00	0.00	1.38	-0.65
6 c	4.32	1.20	0.00	0.00	0.65	-0.06
6 bottom	4.59	1.37	0.00	0.00	0.67	0.04

Summary of the results (Minimum)

Section	--- Deadload ---		----- P.T. ------		--- Live load ---	
	Moment	Ax.Frc	Moment	Ax.Frc	Moment	Ax.Frc
1 a	-0.18	0.02	0.00	0.00	-0.03	0.01
1 b	-2.51	0.27	0.00	0.00	-0.41	0.11
1 c	-6.44	0.92	0.00	0.00	-4.78	0.78
1 right	-7.60	1.13	0.00	0.00	-7.06	1.25
2 left	-9.55	0.30	0.00	0.00	-8.90	0.81
2 a	-8.19	-0.02	0.00	0.00	-6.03	0.49
2 b	-1.77	-1.53	0.00	0.00	-0.42	0.31
2 c	3.39	-2.73	0.00	0.00	-0.14	0.10
2 right	-9.55	0.30	0.00	0.00	-8.90	0.81
3 left	-7.60	1.13	0.00	0.00	-7.06	1.25
3 a	-6.44	0.92	0.00	0.00	-4.78	0.78
3 b	-2.51	0.27	0.00	0.00	-0.41	0.11
3 c	-0.18	0.02	0.00	0.00	-0.03	0.01
3 right	0.00	0.00	0.00	0.00	0.00	0.00
4 left	-4.59	0.83	0.00	0.00	-0.67	0.20

VEH: S5 - SUPERLOAD BRUG(5.75.44) page 40
date 11/09/2009; time 13:29:14
Cline Avenue - Load Rating - Single Box 41' Wide

Summary of the results (Minimum)

Section	--- Deadload ---		----- P.T. ------		--- Live load ---	
	Moment	Ax.Frc	Moment	Ax.Frc	Moment	Ax.Frc
4 a	-3.73	1.26	0.00	0.00	-0.64	0.31
4 b	4.43	5.39	0.00	0.00	-0.01	-0.14
4 c	-3.73	1.26	0.00	0.00	-0.64	0.31
4 right	-4.59	0.83	0.00	0.00	-0.67	0.20
5 top	1.94	-4.04	0.00	0.00	-2.61	-0.28
5 a	1.32	-3.52	0.00	0.00	-2.45	-0.25
5 b	-1.50	-1.01	0.00	0.00	-1.38	-0.65
5 c	-4.32	1.20	0.00	0.00	-0.65	-0.06
5 bottom	-4.59	1.37	0.00	0.00	-0.67	0.04
6 top	-1.94	-4.04	0.00	0.00	-2.22	-4.05
6 a	-1.32	-3.52	0.00	0.00	-1.33	-5.75
6 b	1.50	-1.01	0.00	0.00	-0.40	-2.00
6 c	4.32	1.20	0.00	0.00	-0.51	-0.05
6 bottom	4.59	1.37	0.00	0.00	-0.68	-0.05

4.10.4 Brug Input Striped Lanes

1V_B_SL_HL93_truck_EL.txt 9/11/2009

```
* start ; column 11-30 can be used to have your own text on the top of each page
*   5   10   15   20   25   30   35   40   45   50   55   60   65   70   75   80
*   V    V    V    V    V    V    V    V    V    V    V    V    V    V    V    V
00001  1 1     VEH: HL93- TRUCK - SINGLE TRUCK
* code 1001
Cline Avenue - Striped Lanes - Single Box 41' Wide
* code 1002
    2         1
* code 1003
*   5   10   15   20   25   30   35   40   45   50   55   60   65   70   75   80
*   V    V    V    V    V    V    V    V    V    V    V    V    V    V    V    V
250.0      113.0      41.00    1.0       1.0       1.3
* code 1004
    1    0    2
* code 1005
   72    1
* code 1005a
* location traffic lanes
10.167
* maximum and minimum truck
7.917     29.083    10.000
* code 1007, linear loads
0.7350    0.441
40.2650   0.441
* code 1201
    6    5    3    1    2
* code 1202 coordinates
 0.0000   8.2500
 7.3125   8.2500
 7.3125   0.3333
33.6875   8.2500
33.6875   0.3333
41.0000   8.2500
* code 1203 - profile 1
    5    2    3    4
0.000     0.750
1.000     0.750
3.833     1.125
6.667     1.500
7.313     1.500
* code 1203 - profile 2
    7    2    3    4
0.000     1.500
0.646     1.500
4.646     0.750
13.188    0.750
21.729    0.750
25.729    1.500
26.375    1.500
* code 1203 - profile 3
    5    2    3    4
0.000     1.500
0.646     1.500
3.479     1.125
6.313     0.750
7.313     0.750
* code 1203 - profile 4
    5    2    3    4
0.000     0.667
0.646     0.667
13.188    0.667
25.729    0.667
26.375    0.667
* code 1203 - profile 5
    5    2    3    4
0.000     1.292
0.750     1.292
4.167     1.292
7.583     1.292
7.917     1.292
* code 1204 - assembling boxgirder
    1    2    1
    2    4    2
    4    6    3
    3    5    4
    2    3    5
    4    5    5
* code 1205 control code
    1    2   13    1    1    0    4    3     1.0       1.0
* code 1206 wheels/axle
       0.0
```

1V_B_SL_HL93_truck_EL.txt 9/11/2009

```
       1.5
       6.0
       7.5 0.833
* code 1207 definition axles
0.0       0.1
14.0      0.4
28.0      0.4
* code 1208 - accuracy
0.00001   0.00001   0.00001   .00001    .00001
* code 1209 number sections
   29
* code definition sections
   1A   1B   1C   1R   2L   2A   2B   2C   2R   3L   3A   3B   3C   3R   4L   4A
   4B   4C   4R   5L   5A   5B   5C   5R   6L   6A   6B   6C   6R
* code 1210 - density conrete
0.156
* code 1211 - extra forces selfweight

* code 1212 - surcharge
1.025
* code 1213 - Prestressing Layout - NONE
```

1V_B_SL_HL93_tandem_EL.txt 9/11/2009

```
* start ; column 11-30 can be used to have your own text on the top of each page
*   5   10   15   20   25   30   35   40   45   50   55   60   65   70   75   80
*   V    V    V    V    V    V    V    V    V    V    V    V    V    V    V    V
00001  1 1     VEH: HL93- TANDEM - SINGLE TRUCK
* code 1001
Cline Avenue - Striped Lanes - Single Box 41' Wide
* code 1002
    2         1
* code 1003
*   5   10   15   20   25   30   35   40   45   50   55   60   65   70   75   80
*   V    V    V    V    V    V    V    V    V    V    V    V    V    V    V    V
250.0      113.0      41.00    1.0       1.0       1.3
* code 1004
    1    0    2
* code 1005
   50    1
* code 1005a
* location traffic lanes
10.167
* maximum and minimum truck
7.917     29.083    10.000
* code 1007, linear loads
0.7350    0.441
40.2650   0.441
* code 1201
    6    5    3    1    2
* code 1202 coordinates
 0.0000   8.2500
 7.3125   8.2500
 7.3125   0.3333
33.6875   8.2500
33.6875   0.3333
41.0000   8.2500
* code 1203 - profile 1
    5    2    3    4
0.000     0.750
1.000     0.750
3.833     1.125
6.667     1.500
7.313     1.500
* code 1203 - profile 2
    7    2    3    4
0.000     1.500
0.646     1.500
4.646     0.750
13.188    0.750
21.729    0.750
25.729    1.500
26.375    1.500
* code 1203 - profile 3
    5    2    3    4
0.000     1.500
0.646     1.500
3.479     1.125
6.313     0.750
7.313     0.750
* code 1203 - profile 4
    5    2    3    4
0.000     0.667
0.646     0.667
13.188    0.667
25.729    0.667
26.375    0.667
* code 1203 - profile 5
    5    2    3    4
0.000     1.292
0.750     1.292
4.167     1.292
7.583     1.292
7.917     1.292
* code 1204 - assembling boxgirder
    1    2    1
    2    4    2
    4    6    3
    3    5    4
    2    3    5
    4    5    5
* code 1205 control code
    1    2   13    1    1    0    4    2     1.0       1.0
* code 1206 wheels/axle
       0.0
```

1V_B_SL_HL93_tandem_EL.txt 9/11/2009

```
       1.5
       6.0
       7.5 0.833
* code 1207 definition axles
0.0       0.5
4.0       0.5
* code 1208 - accuracy
0.00001   0.00001   0.00001   .00001    .00001
* code 1209 number sections
   29
* code definition sections
   1A   1B   1C   1R   2L   2A   2B   2C   2R   3L   3A   3B   3C   3R   4L   4A
   4B   4C   4R   5L   5A   5B   5C   5R   6L   6A   6B   6C   6R
* code 1210 - density conrete
0.156
* code 1211 - extra forces selfweight

* code 1212 - surcharge
1.025
* code 1213 - Prestressing Layout - NONE
```

V_B_SL_HL93_truck_EL.txt 9/11/2009

```
* start ; column 11-30 can be used to have your own text on the top of each page
*   5   10   15   20   25   30   35   40   45   50   55   60   65   70   75   80
*   V    V    V    V    V    V    V    V    V    V    V    V    V    V    V    V
00001  1 1     VEH: HL93- TRUCK
* code 1001
Cline Avenue - Striped Lanes - Single Box 41' Wide
* code 1002
    2         1
* code 1003
*   5   10   15   20   25   30   35   40   45   50   55   60   65   70   75   80
*   V    V    V    V    V    V    V    V    V    V    V    V    V    V    V    V
250.0      113.0      41.00    1.0       1.0       1.3
* code 1004
    2    0    2
* code 1005
   72
* code 1005a
* location traffic lanes
10.167    22.167
* maximum and minimum truck
7.917     29.083    10.000
* code 1007, linear loads
0.7350    0.441
40.2650   0.441
* code 1201
    6    5    3    1    2
* code 1202 coordinates
 0.0000   8.2500
 7.3125   8.2500
 7.3125   0.3333
33.6875   8.2500
33.6875   0.3333
41.0000   8.2500
* code 1203 - profile 1
    5    2    3    4
0.000     0.750
1.000     0.750
3.833     1.125
6.667     1.500
7.313     1.500
* code 1203 - profile 2
    7    2    3    4
0.000     1.500
0.646     1.500
4.646     0.750
13.188    0.750
21.729    0.750
25.729    1.500
26.375    1.500
* code 1203 - profile 3
    5    2    3    4
0.000     1.500
0.646     1.500
3.479     1.125
6.313     0.750
7.313     0.750
* code 1203 - profile 4
    5    2    3    4
0.000     0.667
0.646     0.667
13.188    0.667
25.729    0.667
26.375    0.667
* code 1203 - profile 5
    5    2    3    4
0.000     1.292
0.750     1.292
4.167     1.292
7.583     1.292
7.917     1.292
* code 1204 - assembling boxgirder
    1    2    1
    2    4    2
    4    6    3
    3    5    4
    2    3    5
    4    5    5
* code 1205 control code
    1    2   13    1    1    0    4    3     1.0       1.0
* code 1206 wheels/axle
       0.0
```

V_B_SL_HL93_truck_EL.txt 9/11/2009

```
       1.5
       6.0
       7.5 0.833
* code 1207 definition axles
0.0       0.1
14.0      0.4
28.0      0.4
* code 1208 - accuracy
0.00001   0.00001   0.00001   .00001    .00001
* code 1209 number sections
   29
* code definition sections
   1A   1B   1C   1R   2L   2A   2B   2C   2R   3L   3A   3B   3C   3R   4L   4A
   4B   4C   4R   5L   5A   5B   5C   5R   6L   6A   6B   6C   6R
* code 1210 - density conrete
0.156
* code 1211 - extra forces selfweight

* code 1212 - surcharge
1.025
* code 1213 - Prestressing Layout - NONE
```

V_B_SL_HL93_tandem_EL.txt 9/11/2009

```
* start ; column 11-30 can be used to have your own text on the top of each page
*   5   10   15   20   25   30   35   40   45   50   55   60   65   70   75   80
*   V    V    V    V    V    V    V    V    V    V    V    V    V    V    V    V
00001  1 1     VEH: HL93- TANDEM
* code 1001
Cline Avenue - Striped Lanes - Single Box 41' Wide
* code 1002
    2         1
* code 1003
*   5   10   15   20   25   30   35   40   45   50   55   60   65   70   75   80
*   V    V    V    V    V    V    V    V    V    V    V    V    V    V    V    V
250.0      113.0      41.00    1.0       1.0       1.3
* code 1004
    2    0    2
* code 1005
   50
* code 1005a
* location traffic lanes
10.167    22.167
* maximum and minimum truck
7.917     29.083    10.000
* code 1007, linear loads
0.7350    0.441
40.2650   0.441
* code 1201
    6    5    3    1    2
* code 1202 coordinates
 0.0000   8.2500
 7.3125   8.2500
 7.3125   0.3333
33.6875   8.2500
33.6875   0.3333
41.0000   8.2500
* code 1203 - profile 1
    5    2    3    4
0.000     0.750
1.000     0.750
3.833     1.125
6.667     1.500
7.313     1.500
* code 1203 - profile 2
    7    2    3    4
0.000     1.500
0.646     1.500
4.646     0.750
13.188    0.750
21.729    0.750
25.729    1.500
26.375    1.500
* code 1203 - profile 3
    5    2    3    4
0.000     1.500
0.646     1.500
3.479     1.125
6.313     0.750
7.313     0.750
* code 1203 - profile 4
    5    2    3    4
0.000     0.667
0.646     0.667
13.188    0.667
25.729    0.667
26.375    0.667
* code 1203 - profile 5
    5    2    3    4
0.000     1.292
0.750     1.292
4.167     1.292
7.583     1.292
7.917     1.292
* code 1204 - assembling boxgirder
    1    2    1
    2    4    2
    4    6    3
    3    5    4
    2    3    5
    4    5    5
* code 1205 control code
    1    2   13    1    1    0    4    2     1.0       1.0
* code 1206 wheels/axle
       0.0
```

V_B_SL_HL93_tandem_EL.txt 9/11/2009

```
       1.5
       6.0
       7.5 0.833
* code 1207 definition axles
0.0       0.5
4.0       0.5
* code 1208 - accuracy
0.00001   0.00001   0.00001   .00001    .00001
* code 1209 number sections
   29
* code definition sections
   1A   1B   1C   1R   2L   2A   2B   2C   2R   3L   3A   3B   3C   3R   4L   4A
   4B   4C   4R   5L   5A   5B   5C   5R   6L   6A   6B   6C   6R
* code 1210 - density conrete
0.156
* code 1211 - extra forces selfweight

* code 1212 - surcharge
1.025
* code 1213 - Prestressing Layout - NONE
```

4.10.5 Brug Output Striped Lanes (Summary)

VEH: HL93- TRUCK - S BRUG(5.75.44) page 39
date 11/09/2009; time 14:44:35
Cline Avenue - Striped Lanes - Single Box 41' Wide

Summary of the results (Maximum)

Section	--- Deadload ----		----- P.T. ------		--- Live load ---	
	Moment	Ax.Frc	Moment	Ax.Frc	Moment	Ax.Frc
1 a	-0.18	0.02	0.00	0.00	0.00	0.00
1 b	-2.51	0.27	0.00	0.00	1.28	0.08
1 c	-6.44	0.92	0.00	0.00	-0.12	0.08
1 right	-7.60	1.13	0.00	0.00	-0.17	0.10
2 left	-9.55	0.30	0.00	0.00	-3.91	1.07
2 a	-8.19	-0.02	0.00	0.00	-2.10	1.01
2 b	-1.77	-1.53	0.00	0.00	4.51	-0.12
2 c	3.39	-2.73	0.00	0.00	8.77	-1.16
2 right	-9.55	0.30	0.00	0.00	-3.10	-0.49
3 left	-7.60	1.13	0.00	0.00	0.03	0.06
3 a	-6.44	0.92	0.00	0.00	0.03	0.05
3 b	-2.51	0.27	0.00	0.00	0.01	0.01
3 c	-0.18	0.02	0.00	0.00	0.00	0.00
3 right	0.00	0.00	0.00	0.00	0.00	0.00
4 left	-4.59	0.83	0.00	0.00	1.09	-0.44
4 a	-3.73	1.26	0.00	0.00	1.03	-0.26
4 b	4.43	5.39	0.00	0.00	-0.01	0.84
4 c	-3.73	1.26	0.00	0.00	0.80	0.50
4 right	-4.59	0.83	0.00	0.00	0.84	0.35
5 top	1.94	-4.04	0.00	0.00	8.48	-2.85
5 a	1.32	-3.52	0.00	0.00	7.36	-2.51
5 b	-1.50	-1.01	0.00	0.00	3.56	-1.05
5 c	-4.32	1.20	0.00	0.00	1.00	-0.21
5 bottom	-4.59	1.37	0.00	0.00	1.09	-0.10
6 top	-1.94	-4.04	0.00	0.00	-3.13	-0.26
6 a	-1.32	-3.52	0.00	0.00	-2.72	-0.23
6 b	1.50	-1.01	0.00	0.00	-0.89	-0.08
6 c	4.32	1.20	0.00	0.00	0.90	0.07
6 bottom	4.59	1.37	0.00	0.00	1.08	0.09

Summary of the results (Minimum)

Section	--- Deadload ----		----- P.T. ------		--- Live load ---	
	Moment	Ax.Frc	Moment	Ax.Frc	Moment	Ax.Frc
1 a	-0.18	0.02	0.00	0.00	-0.03	0.01
1 b	-2.51	0.27	0.00	0.00	-0.26	0.13
1 c	-6.44	0.92	0.00	0.00	-3.57	0.58
1 right	-7.60	1.13	0.00	0.00	-6.42	0.96
2 left	-9.55	0.30	0.00	0.00	-10.40	-0.35
2 a	-8.19	-0.02	0.00	0.00	-9.00	-0.58
2 b	-1.77	-1.53	0.00	0.00	-3.91	-1.02
2 c	3.39	-2.73	0.00	0.00	0.11	-0.34
2 right	-9.55	0.30	0.00	0.00	-10.40	-0.35
3 left	-7.60	1.13	0.00	0.00	-2.23	0.90
3 a	-6.44	0.92	0.00	0.00	-1.47	0.63
3 b	-2.51	0.27	0.00	0.00	-0.26	0.13
3 c	-0.18	0.02	0.00	0.00	-0.03	0.01
3 right	0.00	0.00	0.00	0.00	0.00	0.00
4 left	-4.59	0.83	0.00	0.00	-0.97	0.75

VEH: HL93- TRUCK - S BRUG(5.75.44) page 40
date 11/09/2009; time 14:44:35
Cline Avenue - Striped Lanes - Single Box 41' Wide

Summary of the results (Minimum)

Section	--- Deadload ----		----- P.T. ------		--- Live load ---	
	Moment	Ax.Frc	Moment	Ax.Frc	Moment	Ax.Frc
4 a	-3.73	1.26	0.00	0.00	-0.92	0.79
4 b	4.43	5.39	0.00	0.00	-0.07	1.69
4 c	-3.73	1.26	0.00	0.00	-1.03	0.60
4 right	-4.59	0.83	0.00	0.00	-1.08	0.57
5 top	1.94	-4.04	0.00	0.00	-2.10	-8.16
5 a	1.32	-3.52	0.00	0.00	-1.77	-6.84
5 b	-1.50	-1.01	0.00	0.00	-0.40	-2.39
5 c	-4.32	1.20	0.00	0.00	-0.73	0.05
5 bottom	-4.59	1.37	0.00	0.00	-0.97	0.07
6 top	-1.94	-4.04	0.00	0.00	-8.48	-2.85
6 a	-1.32	-3.52	0.00	0.00	-7.36	-2.51
6 b	1.50	-1.01	0.00	0.00	-3.56	-1.05
6 c	4.32	1.20	0.00	0.00	-0.93	-0.18
6 bottom	4.59	1.37	0.00	0.00	-0.84	-0.08

VEH: HL93- TANDEM - BRUG(5.75.44) page 39
date 11/09/2009; time 14:44:34
Cline Avenue - Striped Lanes - Single Box 41' Wide

Summary of the results (Maximum)

Section	--- Deadload ---		----- P.T. ------		--- Live load ---	
	Moment	Ax.Frc	Moment	Ax.Frc	Moment	Ax.Frc
1 a	-0.18	0.02	0.00	0.00	0.03	0.01
1 b	-2.51	0.27	0.00	0.00	0.76	0.15
1 c	-6.44	0.92	0.00	0.00	-0.30	0.09
1 right	-7.60	1.13	0.00	0.00	-0.40	0.11
2 left	-9.55	0.30	0.00	0.00	-4.43	-0.51
2 a	-8.19	-0.02	0.00	0.00	-3.43	0.98
2 b	-1.77	-1.53	0.00	0.00	3.45	-0.12
2 c	3.39	-2.73	0.00	0.00	8.11	-1.00
2 right	-9.55	0.30	0.00	0.00	-2.35	-0.37
3 left	-7.60	1.13	0.00	0.00	-0.02	0.04
3 a	-6.44	0.92	0.00	0.00	-0.01	0.03
3 b	-2.51	0.27	0.00	0.00	0.00	0.01
3 c	-0.18	0.02	0.00	0.00	0.00	0.00
3 right	0.00	0.00	0.00	0.00	0.00	0.00
4 left	-4.59	0.83	0.00	0.00	0.79	-0.30
4 a	-3.73	1.26	0.00	0.00	0.74	-0.09
4 b	4.43	5.39	0.00	0.00	-0.01	0.81
4 c	-3.73	1.26	0.00	0.00	0.51	0.70
4 right	-4.59	0.83	0.00	0.00	0.54	0.54
5 top	1.94	-4.04	0.00	0.00	9.06	-3.71
5 a	1.32	-3.52	0.00	0.00	7.76	-3.31
5 b	-1.50	-1.01	0.00	0.00	3.50	-1.44
5 c	-4.32	1.20	0.00	0.00	0.72	-0.19
5 bottom	-4.59	1.37	0.00	0.00	0.79	-0.08
6 top	-1.94	-4.04	0.00	0.00	-2.32	-0.22
6 a	-1.32	-3.52	0.00	0.00	-2.02	-0.20
6 b	1.50	-1.01	0.00	0.00	-0.67	-0.08
6 c	4.32	1.20	0.00	0.00	0.64	0.05
6 bottom	4.59	1.37	0.00	0.00	0.77	0.06

Summary of the results (Minimum)

Section	--- Deadload ---		----- P.T. ------		--- Live load ---	
	Moment	Ax.Frc	Moment	Ax.Frc	Moment	Ax.Frc
1 a	-0.18	0.02	0.00	0.00	-0.05	0.01
1 b	-2.51	0.27	0.00	0.00	-0.46	0.18
1 c	-6.44	0.92	0.00	0.00	-4.19	0.71
1 right	-7.60	1.13	0.00	0.00	-6.62	1.00
2 left	-9.55	0.30	0.00	0.00	-11.96	-0.27
2 a	-8.19	-0.02	0.00	0.00	-10.32	-0.49
2 b	-1.77	-1.53	0.00	0.00	-4.18	-0.87
2 c	3.39	-2.73	0.00	0.00	0.10	-0.30
2 right	-9.55	0.30	0.00	0.00	-11.96	-0.27
3 left	-7.60	1.13	0.00	0.00	-2.93	0.88
3 a	-6.44	0.92	0.00	0.00	-2.13	0.68
3 b	-2.51	0.27	0.00	0.00	-0.46	0.18
3 c	-0.18	0.02	0.00	0.00	-0.05	0.01
3 right	0.00	0.00	0.00	0.00	0.00	0.00
4 left	-4.59	0.83	0.00	0.00	-0.70	0.61

VEH: HL93- TANDEM - BRUG(5.75.44) page 40
date 11/09/2009; time 14:44:34
Cline Avenue - Striped Lanes - Single Box 41' Wide

Summary of the results (Minimum)

Section	--- Deadload ---		----- P.T. ------		--- Live load ---	
	Moment	Ax.Frc	Moment	Ax.Frc	Moment	Ax.Frc
4 a	-3.73	1.26	0.00	0.00	-0.66	0.65
4 b	4.43	5.39	0.00	0.00	-0.06	1.56
4 c	-3.73	1.26	0.00	0.00	-0.73	0.45
4 right	-4.59	0.83	0.00	0.00	-0.77	0.42
5 top	1.94	-4.04	0.00	0.00	-1.23	-6.95
5 a	1.32	-3.52	0.00	0.00	-1.05	-6.05
5 b	-1.50	-1.01	0.00	0.00	-0.21	-2.50
5 c	-4.32	1.20	0.00	0.00	-0.52	0.03
5 bottom	-4.59	1.37	0.00	0.00	-0.70	0.05
6 top	-1.94	-4.04	0.00	0.00	-9.06	-3.71
6 a	-1.32	-3.52	0.00	0.00	-7.76	-3.31
6 b	1.50	-1.01	0.00	0.00	-3.50	-1.44
6 c	4.32	1.20	0.00	0.00	-0.67	-0.16
6 bottom	4.59	1.37	0.00	0.00	-0.54	-0.06

VEH: HL93- TRUCK BRUG(5.75.44) page 39
date 11/09/2009; time 14:44:41
Cline Avenue - Striped Lanes - Single Box 41' Wide

Summary of the results (Maximum)

Section	--- Deadload ----		----- P.T. ------		--- Live load ---	
	Moment	Ax.Frc	Moment	Ax.Frc	Moment	Ax.Frc
1 a	-0.18	0.02	0.00	0.00	0.00	0.00
1 b	-2.51	0.27	0.00	0.00	1.28	0.08
1 c	-6.44	0.92	0.00	0.00	-0.12	0.08
1 right	-7.60	1.13	0.00	0.00	-0.17	0.10
2 left	-9.55	0.30	0.00	0.00	-3.91	1.07
2 a	-8.19	-0.02	0.00	0.00	-2.10	1.01
2 b	-1.77	-1.53	0.00	0.00	4.51	-0.12
2 c	3.39	-2.73	0.00	0.00	12.05	-2.08
2 right	-9.55	0.30	0.00	0.00	-3.10	-0.49
3 left	-7.60	1.13	0.00	0.00	0.03	0.06
3 a	-6.44	0.92	0.00	0.00	0.03	0.05
3 b	-2.51	0.27	0.00	0.00	0.01	0.01
3 c	-0.18	0.02	0.00	0.00	0.00	0.00
3 right	0.00	0.00	0.00	0.00	0.00	0.00
4 left	-4.59	0.83	0.00	0.00	1.30	0.52
4 a	-3.73	1.26	0.00	0.00	1.22	0.80
4 b	4.43	5.39	0.00	0.00	-0.01	0.84
4 c	-3.73	1.26	0.00	0.00	0.80	0.50
4 right	-4.59	0.83	0.00	0.00	0.84	0.35
5 top	1.94	-4.04	0.00	0.00	14.56	-6.15
5 a	1.32	-3.52	0.00	0.00	12.53	-5.32
5 b	-1.50	-1.01	0.00	0.00	5.90	-2.10
5 c	-4.32	1.20	0.00	0.00	1.45	-0.30
5 bottom	-4.59	1.37	0.00	0.00	1.30	-0.13
6 top	-1.94	-4.04	0.00	0.00	-3.13	-0.26
6 a	-1.32	-3.52	0.00	0.00	-2.72	-0.23
6 b	1.50	-1.01	0.00	0.00	-0.89	-0.08
6 c	4.32	1.20	0.00	0.00	1.03	0.06
6 bottom	4.59	1.37	0.00	0.00	1.52	0.11

Summary of the results (Minimum)

Section	--- Deadload ----		----- P.T. ------		--- Live load ---	
	Moment	Ax.Frc	Moment	Ax.Frc	Moment	Ax.Frc
1 a	-0.18	0.02	0.00	0.00	-0.04	0.01
1 b	-2.51	0.27	0.00	0.00	-0.36	0.18
1 c	-6.44	0.92	0.00	0.00	-4.69	1.01
1 right	-7.60	1.13	0.00	0.00	-8.05	1.53
2 left	-9.55	0.30	0.00	0.00	-17.41	-0.89
2 a	-8.19	-0.02	0.00	0.00	-14.79	-1.35
2 b	-1.77	-1.53	0.00	0.00	-3.91	-1.02
2 c	3.39	-2.73	0.00	0.00	0.11	-0.34
2 right	-9.55	0.30	0.00	0.00	-17.41	-0.89
3 left	-7.60	1.13	0.00	0.00	-2.94	1.52
3 a	-6.44	0.92	0.00	0.00	-1.99	1.01
3 b	-2.51	0.27	0.00	0.00	-0.37	0.20
3 c	-0.18	0.02	0.00	0.00	-0.04	0.01
3 right	0.00	0.00	0.00	0.00	0.00	0.00
4 left	-4.59	0.83	0.00	0.00	-0.97	0.75

VEH: HL93- TRUCK BRUG(5.75.44) page 40
date 11/09/2009; time 14:44:41
Cline Avenue - Striped Lanes - Single Box 41' Wide

Summary of the results (Minimum)

Section	--- Deadload ----		----- P.T. ------		--- Live load ---	
	Moment	Ax.Frc	Moment	Ax.Frc	Moment	Ax.Frc
4 a	-3.73	1.26	0.00	0.00	-0.92	0.79
4 b	4.43	5.39	0.00	0.00	-0.13	3.13
4 c	-3.73	1.26	0.00	0.00	-1.44	1.65
4 right	-4.59	0.83	0.00	0.00	-1.52	1.56
5 top	1.94	-4.04	0.00	0.00	-2.10	-8.16
5 a	1.32	-3.52	0.00	0.00	-1.77	-6.84
5 b	-1.50	-1.01	0.00	0.00	-0.40	-2.39
5 c	-4.32	1.20	0.00	0.00	-0.73	0.05
5 bottom	-4.59	1.37	0.00	0.00	-0.97	0.07
6 top	-1.94	-4.04	0.00	0.00	-14.56	-6.16
6 a	-1.32	-3.52	0.00	0.00	-12.53	-5.33
6 b	1.50	-1.01	0.00	0.00	-5.90	-2.10
6 c	4.32	1.20	0.00	0.00	-0.95	-0.21
6 bottom	4.59	1.37	0.00	0.00	-0.84	-0.08

VEH: HL93- TANDEM BRUG(5.75.44) page 39
date 11/09/2009; time 14:44:41
Cline Avenue - Striped Lanes - Single Box 41' Wide

Summary of the results (Maximum)

Section	--- Deadload ----		----- P.T. ------		--- Live load ---	
	Moment	Ax.Frc	Moment	Ax.Frc	Moment	Ax.Frc
1 a	-0.18	0.02	0.00	0.00	0.03	0.01
1 b	-2.51	0.27	0.00	0.00	0.76	0.15
1 c	-6.44	0.92	0.00	0.00	-0.30	0.09
1 right	-7.60	1.13	0.00	0.00	-0.40	0.11
2 left	-9.55	0.30	0.00	0.00	-4.43	-0.51
2 a	-8.19	-0.02	0.00	0.00	-3.43	0.98
2 b	-1.77	-1.53	0.00	0.00	3.45	-0.12
2 c	3.39	-2.73	0.00	0.00	11.12	-1.80
2 right	-9.55	0.30	0.00	0.00	-2.35	-0.37
3 left	-7.60	1.13	0.00	0.00	-0.02	0.04
3 a	-6.44	0.92	0.00	0.00	-0.01	0.03
3 b	-2.51	0.27	0.00	0.00	0.00	0.01
3 c	-0.18	0.02	0.00	0.00	0.00	0.00
3 right	0.00	0.00	0.00	0.00	0.00	0.00
4 left	-4.59	0.83	0.00	0.00	0.85	0.74
4 a	-3.73	1.26	0.00	0.00	0.81	1.06
4 b	4.43	5.39	0.00	0.00	-0.01	0.81
4 c	-3.73	1.26	0.00	0.00	0.51	0.70
4 right	-4.59	0.83	0.00	0.00	0.54	0.54
5 top	1.94	-4.04	0.00	0.00	14.95	-6.25
5 a	1.32	-3.52	0.00	0.00	12.82	-5.54
5 b	-1.50	-1.01	0.00	0.00	5.70	-2.38
5 c	-4.32	1.20	0.00	0.00	1.05	-0.29
5 bottom	-4.59	1.37	0.00	0.00	0.85	-0.09
6 top	-1.94	-4.04	0.00	0.00	-2.32	-0.22
6 a	-1.32	-3.52	0.00	0.00	-2.02	-0.20
6 b	1.50	-1.01	0.00	0.00	-0.67	-0.08
6 c	4.32	1.20	0.00	0.00	0.73	0.03
6 bottom	4.59	1.37	0.00	0.00	1.13	0.08

Summary of the results (Minimum)

Section	--- Deadload ----		----- P.T. ------		--- Live load ---	
	Moment	Ax.Frc	Moment	Ax.Frc	Moment	Ax.Frc
1 a	-0.18	0.02	0.00	0.00	-0.08	0.02
1 b	-2.51	0.27	0.00	0.00	-0.66	0.26
1 c	-6.44	0.92	0.00	0.00	-6.01	1.26
1 right	-7.60	1.13	0.00	0.00	-9.10	1.70
2 left	-9.55	0.30	0.00	0.00	-19.09	-0.70
2 a	-8.19	-0.02	0.00	0.00	-16.39	-0.92
2 b	-1.77	-1.53	0.00	0.00	-4.60	-1.51
2 c	3.39	-2.73	0.00	0.00	0.10	-0.30
2 right	-9.55	0.30	0.00	0.00	-19.09	-0.70
3 left	-7.60	1.13	0.00	0.00	-4.09	1.28
3 a	-6.44	0.92	0.00	0.00	-2.99	0.98
3 b	-2.51	0.27	0.00	0.00	-0.66	0.26
3 c	-0.18	0.02	0.00	0.00	-0.08	0.02
3 right	0.00	0.00	0.00	0.00	0.00	0.00
4 left	-4.59	0.83	0.00	0.00	-0.73	1.63

VEH: HL93- TANDEM BRUG(5.75.44) page 40
date 11/09/2009; time 14:44:41
Cline Avenue - Striped Lanes - Single Box 41' Wide

Summary of the results (Minimum)

Section	--- Deadload ----		----- P.T. ------		--- Live load ---	
	Moment	Ax.Frc	Moment	Ax.Frc	Moment	Ax.Frc
4 a	-3.73	1.26	0.00	0.00	-0.69	1.78
4 b	4.43	5.39	0.00	0.00	-0.10	2.92
4 c	-3.73	1.26	0.00	0.00	-1.07	1.45
4 right	-4.59	0.83	0.00	0.00	-1.13	1.36
5 top	1.94	-4.04	0.00	0.00	-1.23	-6.95
5 a	1.32	-3.52	0.00	0.00	-1.05	-6.05
5 b	-1.50	-1.01	0.00	0.00	-0.21	-2.50
5 c	-4.32	1.20	0.00	0.00	-0.52	0.03
5 bottom	-4.59	1.37	0.00	0.00	-0.73	0.04
6 top	-1.94	-4.04	0.00	0.00	-14.95	-6.25
6 a	-1.32	-3.52	0.00	0.00	-12.82	-5.54
6 b	1.50	-1.01	0.00	0.00	-5.70	-2.38
6 c	4.32	1.20	0.00	0.00	-0.68	-0.20
6 bottom	4.59	1.37	0.00	0.00	-0.54	-0.06

4.11 3D Analysis Section VC

CASE VC - SINGLE BOX PORTION OF SECTION IVA
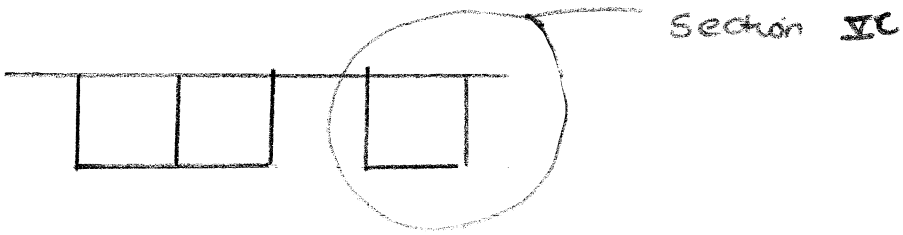
See section IVA for model data.