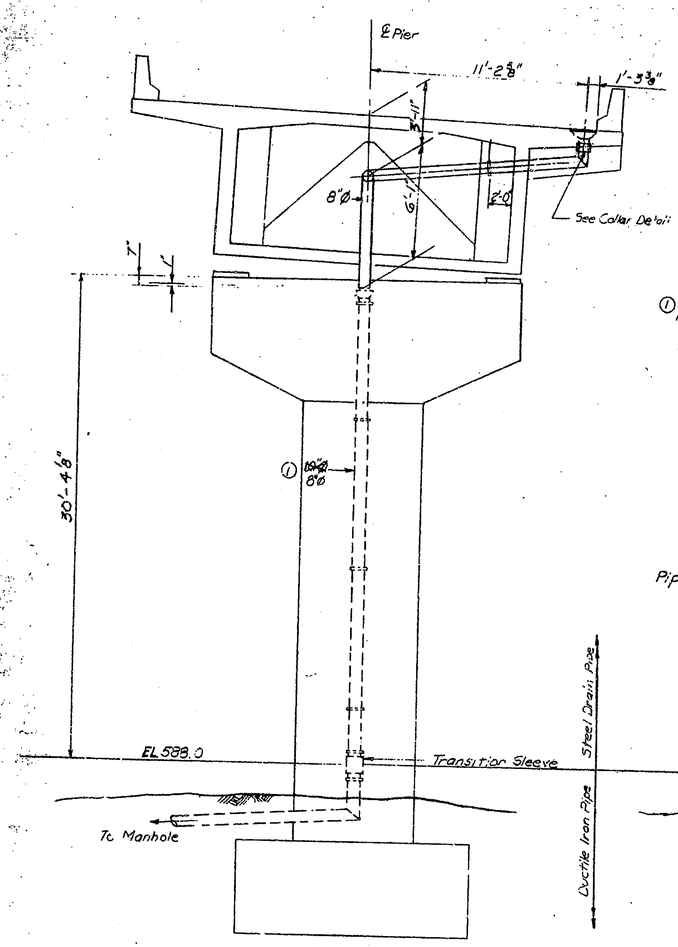

SECTION - A

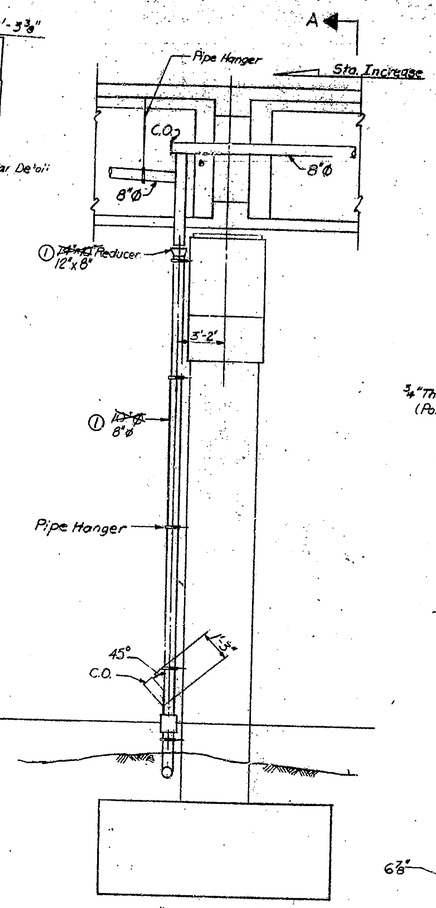

ELEVATION

PIER 103

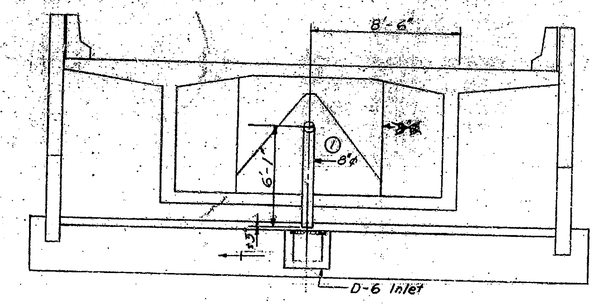

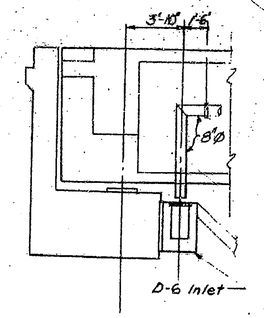

ABUTMENT 101

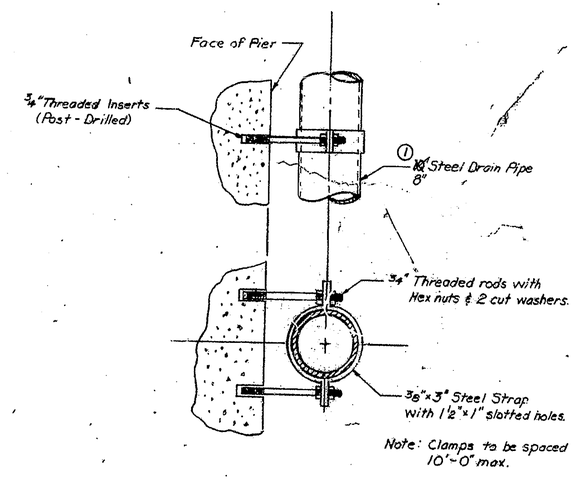

PIPE CONNECTION DETAIL (TYP)

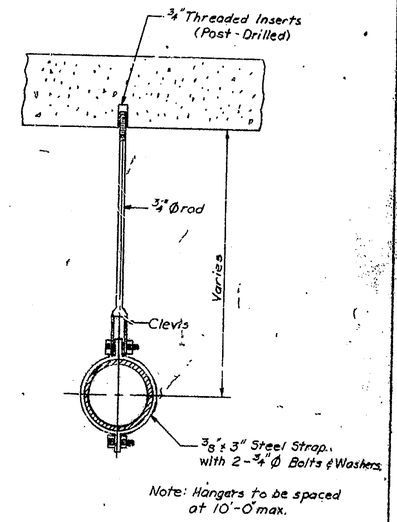

PIPE HANGER DETAIL (TYP)

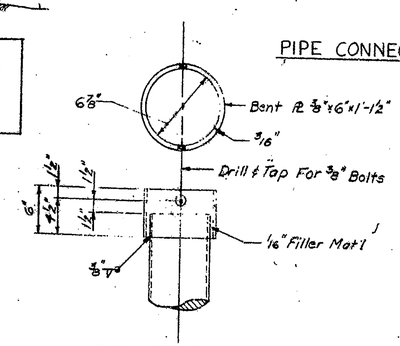

COLLAR DETAIL (TYP)

① Revision 5/16/88 Drain Pipe

DESIGNED	M.M.	CK'D.	M.M.
DRAWN	T.D.S.	CK'D.	G.R.
TRACED	T.D.S.	CK'D.	M.M.

Figg and Muller Engineers Inc.
Consulting Engineers
Tallahassee Florida 32301

SUPERSTRUCTURE DRAINAGE DETAIL

INDIANA STATE HIGHWAY COMMISSION

LAKE COUNTY - RAMP:- D SECTION:-

SCALE:- N.T.S. DATE:- July 29, 1981

SUBMITTED FOR APPROVAL Eugene C. Figg, Jr.

DRAWING:- OF SHEET:- 123A OF

PROJECT:- MM 220-1(8)

CONTRACT NO. B-12752

BRIDGE FILE:- 912-45-2546 REX