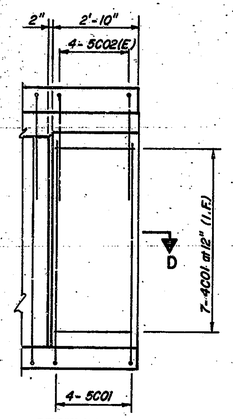

SECTION B-B

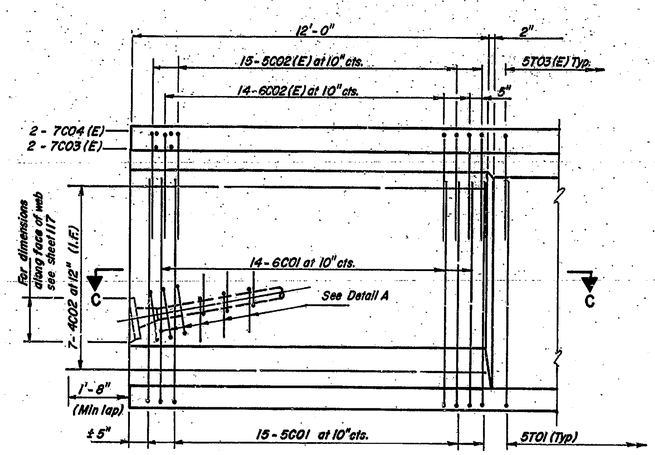

SECTION A-A

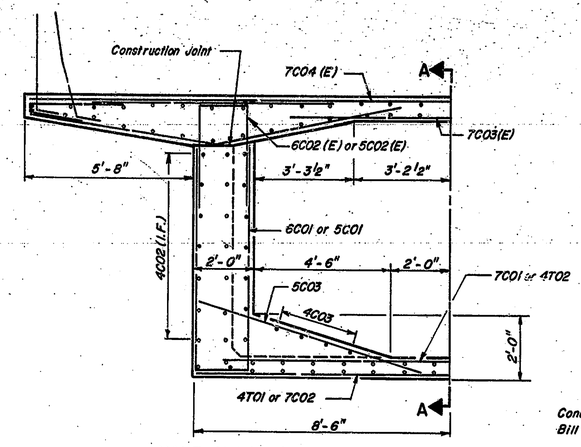

HALF CROSS SECTION
JACKING END

Concrete Quantities included in Bill of Material Sheet 107.

BILL OF MATERIAL

Bars	No. / Units I	II	III	Total No.	Length	Bent	Str.
4C01	–	14	14	28	4'-5"	●	
4C02	14	14	–	28	15'-3"	●	
4C03	8	8	–	16	11'-10"		●
4C04	48	48	–	96	9'-0"	●	
5C01	30	38	38	106	16'-6"	●	
5C02(E)	30	38	38	106	9'-0"	●	
5C03	30	30	–	60	7'-9"		●
6C01	28	28	–	56	16'-6"	●	
6C02(E)	20	28	–	56	9'-10"	●	
6C03	48	48	–	96	3'-10"	●	
7C01	5	5	–	10	19'-2"	●	
7C02	5	5	–	10	14'-8"		●
7C03(E)	2	2	–	4	12'-4"		●
7C04(E)	2	2	–	4	28'-2"		●

ESTIMATED QUANTITIES

Item	Unit	Total
Reinforcing Steel	Lb.	6012.80
Reinforcing Steel (Epoxy Coated)	Lb.	2153.25

NOTE: All reinforcing bars shall conform to the requirements of ASTM Grade 60. Minimum compressive strength of Superstructure Conc. shall be 5,000 p.s.i.

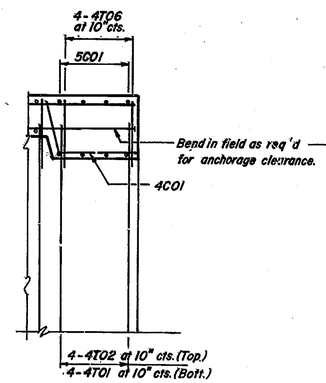

SECTION D-D

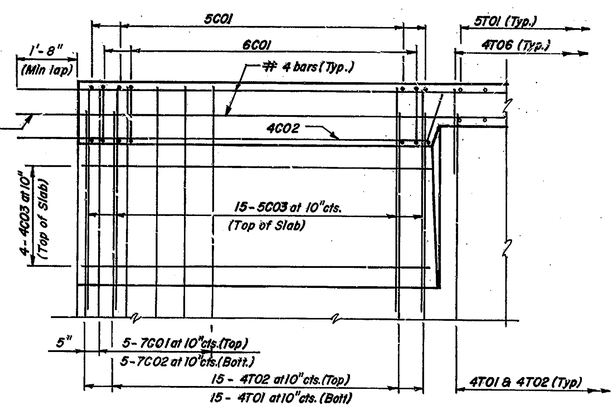

SECTION C-C

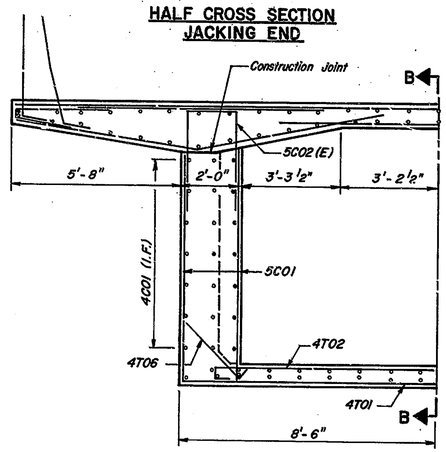

HALF CROSS SECTION
COUPLER END

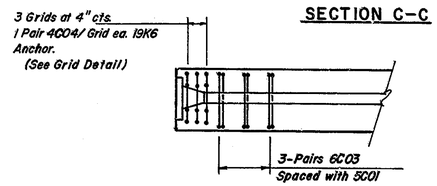

DETAIL A - PLAN VIEW

GRID DETAIL

CONSTRUCTION JOINT REINFORCEMENT

Bar	a	b
5C01	1'-10"	7'-4"
5C02(E)	1'-10"	3'-7"
6C01	1'-10"	7'-4"
6C02(E)	1'-10"	4'-0"
6C03	1'-10"	1'-0"
7C01	16'-10"	1'-2"

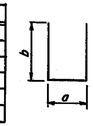

5C01, 5C02(E)
6C01, 6C02(E), 6C03, 7C01

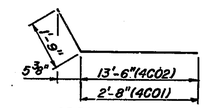

4C01, 4C02

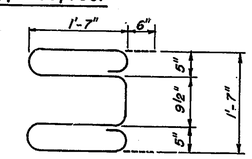

4C04

DESIGNED	M.M.	C'K'D.	M.M.
DRAWN	R.E.T.	C'K'D.	R.E.T.
TRACED	T.D.S.	C'K'D.	G.R.

APPROVED FOR CONSTRUCTION
W. B. Abbott
W. B. ABBOTT
(1-2-81)

Figg and Muller Engineers Inc.
4444 Corporate Square
Tallahassee Florida 32301

CONSTRUCTION JOINT REINFORCEMENT DETAILS

INDIANA STATE HIGHWAY COMMISSION

LAKE COUNTY - RAMP:- D SECTION:-
SCALE:- DATE:- July 29, 1981
SUBMITTED FOR APPROVAL Eugene C. Figg, Jr.
DRAWING:- OF SHEET: 109 OF
PROJECT:- MM 220-1 (8)
CONTRACT NO. B-12752
BRIDGE FILE:- 912-45-2546 REX

EUGENE C. FIGG, JR. REGISTERED 19 1980 STATE OF INDIANA PROFESSIONAL ENGINEER