BAR BENDING DIAGRAMS

NOTE: Number preceding letter denotes bar size.
All dimensions are out to out.
All bar bending diagrams shall be in accordance with A.C.I. Standards.

TYPICAL SECTION REINFORCEMENT

NOTE: (*) See Sheet No. 109

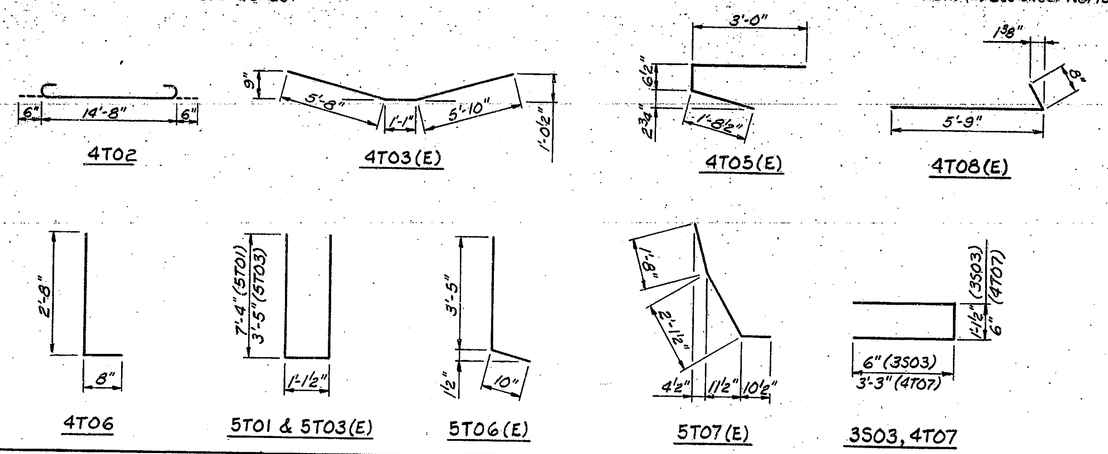

EXPANSION JOINT REINFORCEMENT

Bar	a	b	c
4E03(E)	3'-8"	9"	4½"
4E04(E)	1'-7"	2'-3"	4½"
4E05(E)	10"	*~~2'-9½"~~	4½"
4E06(E)	3'-2½"	*~~2'-9½"~~	4½"
4E07(E)	3'-2½"	4'-3½"	4½"
4E08(E)	10"	4'-3½"	4½"
5E04	4'-10"	11½"	5½"
5E06	8'-6"	11½"	5½"
7E01	8'-6"	11½"	7½"

*Changed to 2'-8½"

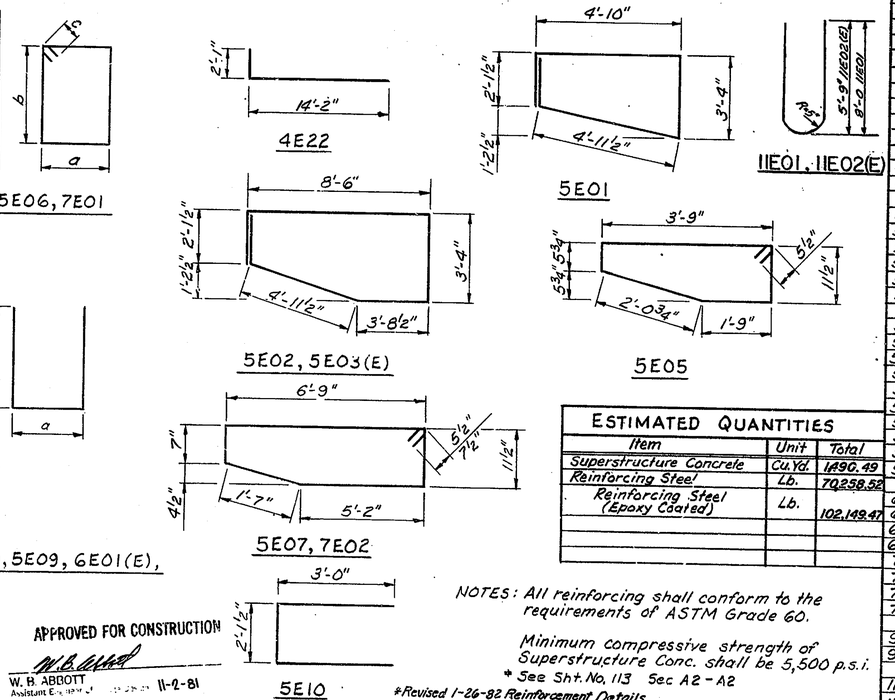

Bar	a	b
4E09(E)	10"	4'-0"
4E10	10"	6'-5"
4E11(E)	2'-9"	3'-0"
4E12	2'-9"	7'-5½"
4E13(E)	2'-6½"	3'-0"
4E14	2'-6½"	7'-5½"
4E15(E)	2'-4½"	3'-0"
4E16	2'-4½"	7'-5½"
4E17(E)	2'-1½"	3'-0"
4E18	2'-1½"	7'-5½"
5E08(E)	2'-1½"	3'-6"
5E09	2'-1½"	6'-11½"
6E01(E)	2'-1½"	3'-6"
6E02	2'-1½"	6'-11½"
6C03	1'-10"	1'-0"

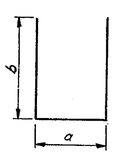

4E09(E) thru 4E18(E), 5E08(E), 5E09, 6E01(E), 6E02, 6C03

ESTIMATED QUANTITIES

Item	Unit	Total
Superstructure Concrete	Cu.Yd.	1490.49
Reinforcing Steel	Lb.	70,258.52
Reinforcing Steel (Epoxy Coated)	Lb.	102,149.47

NOTES: All reinforcing shall conform to the requirements of ASTM Grade 60.

Minimum compressive strength of Superstructure Conc. shall be 5,500 p.s.i.

* See Sht. No. 113 Sec A2 - A2

*Revised 1-26-82 Reinforcement Details.

APPROVED FOR CONSTRUCTION

W. B. ABBOTT
Assistant Engineer 11-2-81

DESIGNED M.M. C'K'D M.M.
DRAWN R.E.T. C'K'D M.M.
TRACED R.E.T. C'K'D M.M.

BILL OF MATERIAL

UNIT I Bar	No.	Length	Bent	Str.
3S03	328	2'-2"	•	
4C04(*)	48	9'-0"	•	
4T01	214	16'-10"		•
4T02	214	15'-8"	•	
4T03(E)	410	12'-8"	•	
4T04(E)	254	28'-2"		•
4T05(E)	508	5'-3"	•	
4T06	398	3'-4"	•	
4T07	104	7'-0"	•	
4T08(E)	196	6'-5"	•	
4T09(E)	127	10'-8"		•
4L01(E)	28	12'-6"		•
4L04	124	60'-0"		•
4L04(E)	174	60'-0"		•
4L05	30	46'-9"		•
4L06	48	46'-3"		•
4L07	14	26'-0"		•
4L08	14	15'-8"		•
4L09	32	50'-8"		•
4L10(E)	58	38'-0"		•
4E01(E)	3	28'-2"		•
4E02	4	28'-2"		•
4E03(E)	46	9'-7"	•	
4E04(E)	23	6'-5"	•	
4E05(E)	12	*~~6'-8"~~	•	
4E06(E)	6	*~~12'-9"~~	•	
4E07(E)	4	15'-9"	•	
4E08(E)	8	11'-0"	•	
4E09(E)	10	8'-10"	•	
4E10	10	13'-8"	•	
4E11(E)	2	8'-9"	•	
4E12	2	17'-8"	•	
4E13(E)	2	8'-7"	•	
4E14	2	17'-6"	•	
4E15(E)	2	8'-5"	•	
4E16	2	17'-4"	•	
4E17(E)	2	8'-2"	•	
4E18	2	17'-1"	•	
4E19(E)	29	6'-6"		•
4E20(E)	29	4'-8"		•
4E21	34	4'-10"		•
4E22	16	16'-3"	•	
5T01	420	15'-10"	•	
5T03(E)	420	8'-0"	•	
5T04(E)	127	10'-8"		•
5T05(E)	508	8'-0"		•
5T06(E)	508	4'-3"	•	
5T07(E)	508	4'-8"	•	
5E01	8	17'-5"	•	
5E02	6	24'-9"	•	
5E03(E)	2	24'-9"	•	
5E04	8	12'-5"	•	
5E05	8	10'-0"	•	
5E06	2	19'-10"	•	
5E07	2	16'-0"	•	
5E08(E)	30	9'-2"	•	
5E09	30	16'-1"	•	
5E10	14	8'-2"	•	
6E01(E)	28	9'-2"	•	
6E02	28	16'-1"	•	
6C03(*)	48	3'-10"	•	
6L01 #	12	17'-0"		•
7E01	4	20'-1"	•	
7E02	4	16'-3"	•	
7E03(E)	4	28'-2"		•
7E04	18	16'-10"		•
9E01(E)	4	28'-2"		•
9E02	8	10'-6"		•
11E01	12	16'-10"	•	
11E02(E)	12	12'-4"	•	

UNIT II Bar	No.	Length	Bent	Str.
3S03	304	2'-2"	•	
4T01	201	16'-10"		•
4T02	201	15'-8"	•	
4T03(E)	382	12'-8"	•	
4T04(E)	229	28'-2"		•
4T05(E)	229	5'-3"	•	
4T06	368	3'-4"	•	
4T07	74	7'-0"	•	
4T08(E)	152	6'-5"	•	
4T09(E)	114	10'-8"		•
4L01(E)	28	12'-6"		•
4L04	124	60'-0"		•
4L04(E)	174	60'-0"		•
4L15	48	32'-7"		•
4L16	48	41'-3"		•
4L17	14	9'-0"		•
4L18	14	19'-0"		•
4L19	14	21'-0"		•
4L20	14	15'-8"		•
4L21(E)	58	15'-0"		•
5T01	406	15'-10"	•	
5T03(E)	406	8'-0"	•	
5T04(E)	115	10'-8"		•
5T05(E)	458	8'-0"		•
5T06(E)	458	4'-3"	•	
5T07(E)	458	4'-8"	•	
6L01 #		17'-0"		•

UNIT III Bar	No.	Length	Bent	Str.
3S03	250	2'-2"	•	
4T01	223	16'-10"		•
4T02	223	15'-8"	•	
4T03(E)	404	12'-8"	•	
4T04(E)	249	28'-2"		•
4T05(E)	498	5'-3"	•	
4T06	442	3'-4"	•	
4T07	90	7'-0"	•	
4T08(E)	68	6'-5"	•	
4T09(E)	124	10'-8"		•
4L01(E)	28	12'-6"		•
4L04	76	60'-0"		•
4L04(E)	174	60'-0"		•
4L30	48	50'-0"		•
4L31	48	40'-0"		•
4L32	48	32'-7"		•
4L33	62	20'-8"		•
4L34	14	19'-0"		•
4L35	14	37'-4"		•
4L36(E)	58	32'-1"		•
5T01	460	15'-10"	•	
5T03(E)	460	8'-0"	•	
5T04(E)	125	10'-8"		•
5T05(E)	498	8'-0"		•
5T06(E)	498	4'-3"	•	
5T07(E)	498	4'-8"	•	
6L01 #		17'-0"		•

Flgg and Muller Engineers Inc.
421 West College Street
Fort Wayne, Indiana 46802

BAR BENDING DIAGRAMS & BILL OF MATERIAL - UNITS I thru III

INDIANA STATE HIGHWAY COMMISSION

LAKE COUNTY - RAMP:- D SECTION:-
SCALE:- N.T.S. DATE:- July 29, 1981
SUBMITTED FOR APPROVAL Eugene C. Figg, Jr.
DRAWING:- OF SHEET:- 107A OF
PROJECT:- MM 220-1(8)
CONTRACT NO. B-12752
BRIDGE FILE:- 912-45-2546 REX

EUGENE C. FIGG, JR. REGISTERED No. 10568 STATE OF INDIANA PROFESSIONAL ENGINEER