BAR BENDING DIAGRAMS

NOTE: Number preceding letter denotes bar size.
All dimensions are out to out.
All bar bending pin diameters shall be in accordance with A.C.I. Standards.

TYPICAL SECTION REINFORCEMENT

Bar	a	b
3S01	1'-1½"	1'-0"
4S13	6"	3'-4"
4S24(E)	2'-3"	1'-8"
4S26	6"	1'-2"
5S01	1'-1½"	7'-4"
5S03(E)	1'-1½"	3'-5"

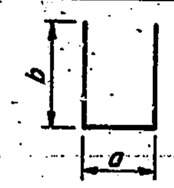

3S01, 4S13, 4S24(E), 4S26, 5S01 5S03(E)

Bar	a	b
3S02	1'-2"	4'-0"
4S09	8"	2'-8"

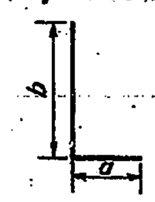

3S02, 4S09

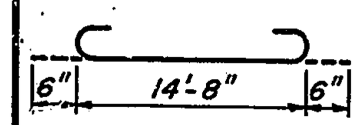

4S02

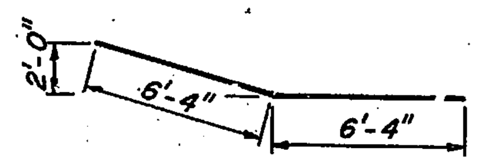

4S03(E)

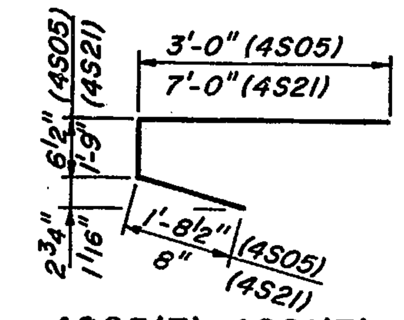

4S05(E), 4S21(E)

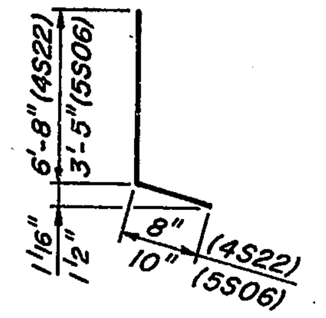

4S22(E), 5S06(E)

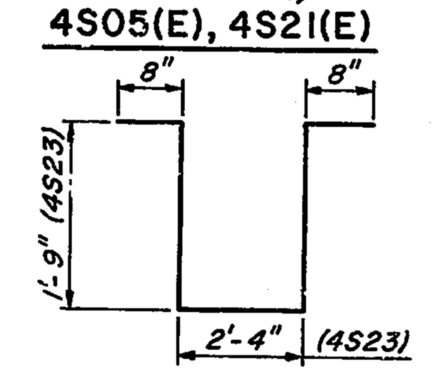

4S23(E)

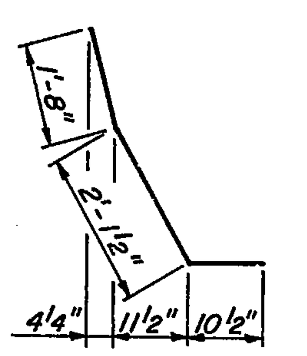

5S07(E)

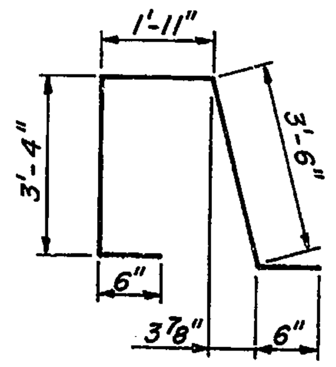

6S06(E)

PIER DIAPHRAGM REINFORCEMENT

Bar	a	b	c
4S31	3'-3"	2'-4"	4½"
4S32	4'-0¼"	2'-4"	4½"
4S33	4'-10"	2'-4"	4½"
4S34	5'-7¾"	2'-4"	4½"
4S35	6'-5½"	2'-4"	4½"
4S36	7'-3¼"	2'-4"	4½"
4S39(E)	2'-3"	2'-4½"	4½"
4S40(E)	2'-3"	1'-6"	4½"
5S40	3'-3"	4'-10"	5½"

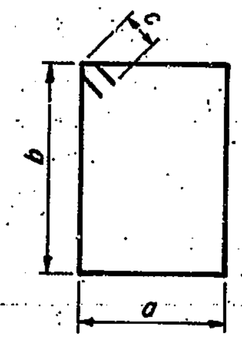

4S31 thru 4S36, 4S39(E), 4S40(E), 5S40

Bar	a	b
4S37(E)	4'-8½"	3'-0"
4S38(E)	2'-3"	3'-0"
4S41	2'-3"	2'-3"
4S42	2'-3"	3'-6"
4S43	2'-3"	4'-8"
4S44	2'-3"	5'-11"
4S48	4'-8½"	7'-3"
4S49	3'-1½"	7'-3"
4S50(E)	3'-1½"	3'-0"
11S40	2'-2½"	4'-10"

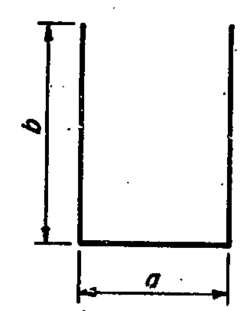

4S37(E), 4S38(E), 4S41 thru 4S44, 4S48, 4S49, 4S50(E), 11S40

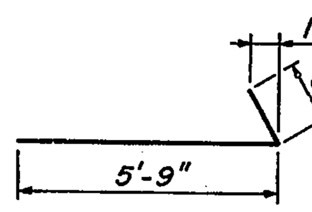

4S45(E)

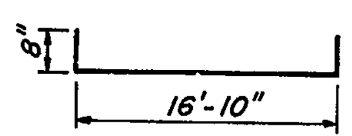

4S46

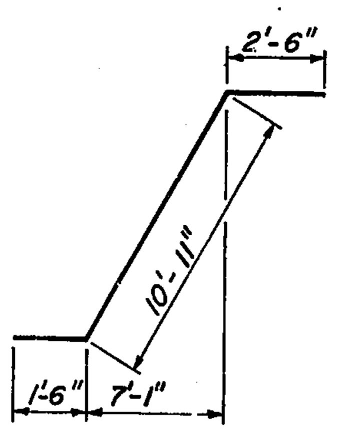

7S40(E)

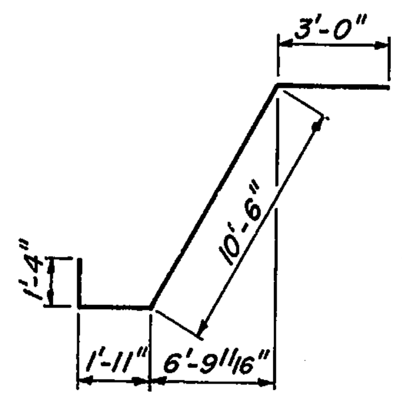

8S40

ABUTMENT DIAPHRAGM REINFORCEMENT

Bar	a	b	c
4S66 (E)	2'-4"	10"	4½"
4S67 (E)	2'-3"	1'-8½"	4½"
4S68(E)	2'-3"	2'-10¾"	4½"
4S69 (E)	2'-3"	4'-0"	4½"
4S70 (E)	2'-3"	5'-2"	4½"
4S71 (E)	2'-3"	6'-4"	4½"
4S78 (E)	1'-0½"	8'-1"	4½"
4S80(E)	2'-4"	8"	4½"
5S60 (E)	3'-4"	2'-11½"	5½"
5S61 (E)	3'-4"	3'-10"	5½"
5S62(E)	1'-3"	3'-10"	5½"
5S63	3'-4"	1'-1"	5½"

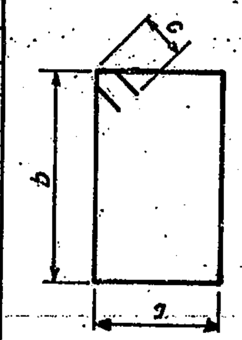

4S66(E)-4S71(E), 4S78(E), 4S80(E)
5S60(E) - 5S63

Bar	a	b
4S77 (E)	2'-4"	1'-10"
6S63 (E)	3'-2½"	4'-0"
6S64	3'-2½"	7'-3"
6S65 (E)	1'-1½"	4'-0"
6S66	1'-1½"	7'-3"
9S60 (E)	3'-2½"	5'-6"
9S61	3'-2½"	7'-3"
9S62 (E)	1'-1½"	5'-6
9S63	1'-1½"	7'-3"

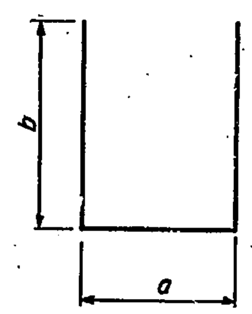

4S77(E), 6S63(E) - 6S66(E), 9S60(E)-9S63(E)

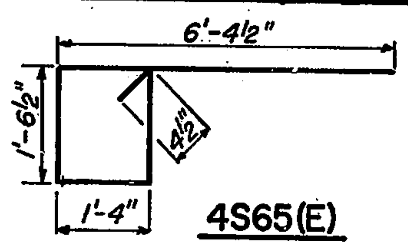

4S65(E)

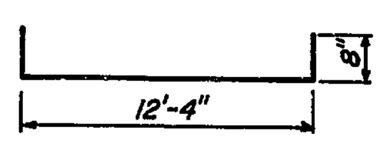

4S62(E)

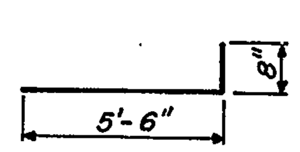

4S63 (E)

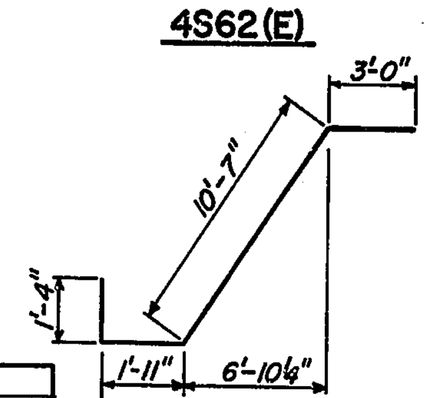

6S60(E)

Bar	a	b
4S72 (E)	5'-5"	7'-8"
4S73 (E)	4'-7"	6'-9"
4S74 (E)	3'-9"	5'-10"
4S75 (E)	2'-11"	4'-11"
4S76 (E)	2'-1"	4'-0"

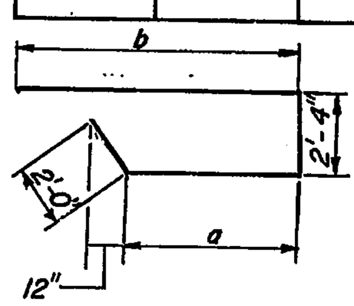

4S72(E), 4S76(E)

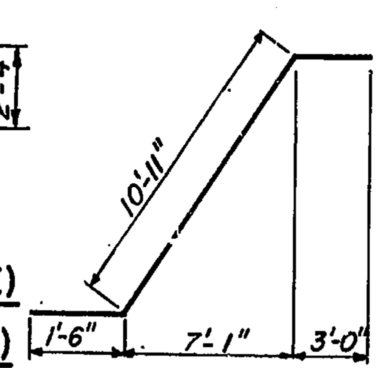

6S67(E)

CONSTRUCTION JOINT REINFORCEMENT

Bar	a	b
5S02	1'-10"	7'-4"
5S08(E)	1'-10"	3'-7"
6S03	1'-10"	1'-0"

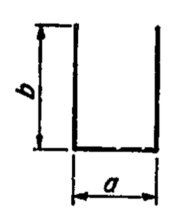

5S02, 5S08(E), 6S03

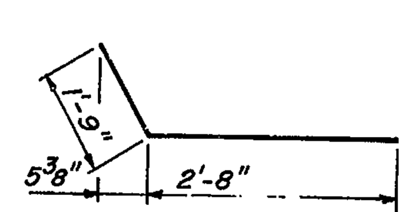

4S06

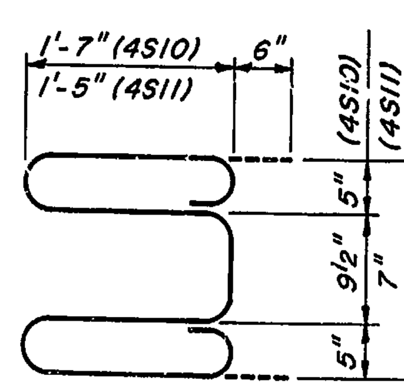

4S10, 4S11

APPROVED FOR CONSTRUCTION
W. B. Abbott
W. B. ABBOTT 7-30-81
[illegible] Engineer of [illegible]

DESIGNED MM	C'K'D MM
DRAWN R.E.T.	C'K'D GR
TRACED NBD	C'K'D RET

BILL OF MATERIAL

Bar	No.	Length	Bent	Str.
3S01	2076	3'-2"	•	
3S02	182	5'-2"	•	
4S01	193	16'-10"		•
4S02	186	15'-8"	•	
4S03(E)	214	12'-8"	•	
4S04(E)	192	28'-2"		•
4S05(E)	384	5'-3"	•	
4S06	14	4'-5"	•	
4S09	364	3'-4"	•	
4S10	12	9'-0"	•	
4S11	24	8'-1"	•	
4S12(E)	96	10'-8"		•
4S13	108	7'-2"	•	
4S14(E)	192	7'-9"		•
4S15	124	60'-0"		•
4S15(E)	116	60'-0"		•
4S16	62	30'-7"		•
4S17	62	15'-4"		•
4S18(E)	58	52'-8"		•
4S19	32	56'-0"		
4S21(E)	4	9'-5"	•	
4S22(E)	4	7'-4"	•	
4S23(E)	14	7'-2"	•	
4S24(E)	2	5'-7"	•	
4S26	14	2'-10"	•	
4S30(E)	28	12'-6"		•
4S31	8	11'-11"	•	
4S32	4	13'-6"	•	
4S33	4	15'-1"	•	
4S34	4	16'-9"	•	
4S35	4	18'-4"	•	
4S36	4	20'-0"	•	
4S37(E)	6	10'-9"	•	
4S38(E)	8	13'-6"	•	
4S39(E)	2	10'-0"	•	
4S40(E)	1	8'-3"	•	
4S41	2	6'-9"	•	
4S42	2	9'-3"	•	
4S43	2	11'-7"	•	
4S44	2	14'-1"	•	
4S45(E)	170	6'-5"	•	
4S46	7	18'-2"	•	
4S47	62	5'-6"		•
4S48	6	19'-3"	•	
4S49	4	15'-8"	•	
4S50(E)	4	9'-2"	•	

Bar	No.	Length	Bent	Str.
4S61 (E)	5	28'-0"		•
4S62 (E)	1	13'-8"	•	
4S63 (E)	2	6'-2"	•	
4S64 (E)	2	5'-3"		•
4S65 (E)	34	10'-10"	•	
4S66 (E)	28	7'-1"	•	
4S67 (E)	2	8'-8"	•	
4S68 (E)	2	11'-1"	•	
4S69 (E)	2	13'-3"	•	
4S70 (E)	2	15'-7"	•	
4S71 (E)	2	17'-11"	•	
4S72 (E)	2	17'-5"	•	
4S73 (E)	2	15'-8"	•	
4S74 (E)	2	13'-11"	•	
4S75 (E)	2	12'-2"	•	
4S76(E)	2	10'-5"	•	
4S77(E)	10	6'-0	•	
4S78(E)	2	19'-0"	•	
4S80(E)	6	6'-9"	•	
5S01	398	9'-6"	•	
5S02	8	13'-6"	•	
5S03(E)	398	8'-0"	•	
5S04(E)	96	10'-8"		•
5S05(E)	384	8'-0"		•
5S06(E)	390	4'-3"	•	
5S07(E)	390	4'-8"	•	
5S08(E)	8	4'-0"		•
5S40	28	17'-1"	•	
5S60(E)	14	13'-6"	•	
5S61 (E)	4	15'-3"	•	
5S62 (E)	4	11'-1"	•	
5S63	14	9'-9"	•	
6S03	48	3'-10"	•	

Bar	No.	Length	Bent	Str.
6S08(E)	24	17'-0"		•
6S09(E)	12	8'-0"		•
6S60 (E)	6	16'-10"	•	
6S62	12	16'-7"		•
6S63 (E)	6	11'-3"	•	
6S64 (E)	6	17'-9"	•	
6S65 (E)	2	9'-2"	•	
6S66 (E)	2	15'-8"	•	
6S67 (E)	4	15'-5"	•	
7S40(E)	4	14'-11"	•	
7S60(E)	3	27'-10"		•
8S01	16	5'-0"		•
8S40	8	16'-9"	•	
9S60 (E)	2	13'-9"	•	
9S61	2	17'-9"	•	
9S62 (E)	2	11'-9"	•	
9S63	2	17'-9"	•	
11S40	2	11'-11"	•	
11S41(E)	4	24'-8"		•
11S42	2	16'-9"		•

ESTIMATED QUANTITIES

Item	Unit	Total
Superstructure Concrete	Cu.Yd.	367.4
Reinforcing Steel	Lb.	24,386
Reinforcing Steel (Epoxy Coated)	Lb.	30,676

NOTES: All reinforcment bars shall conform to the requirements of ASTM Grade 60.
Minimum compressive strength of Superstructure Conc. shall be 5,500 p.s.i.

Figg and Muller Engineers Inc.
424 North Calhoun Street
Tallahassee Florida 32301

BAR BENDING DIAGRAMS & BILL OF MATERIAL - UNIT VIII

INDIANA STATE HIGHWAY COMMISSION

LAKE COUNTY - RAMP:- C SECTION:-
SCALE:- N.T.S. DATE:- MAY 26, 1981
SUBMITTED FOR APPROVAL Eugene C. Figg, Jr.
DRAWING:- OF SHEET:- 321 OF
PROJECT:- MM 220-1(8)
CONTRACT NO. B-12752
BRIDGE FILE:- 912-45-2546 REN

EUGENE C. FIGG, JR. REGISTERED No 18543 STATE OF INDIANA PROFESSIONAL ENGINEER