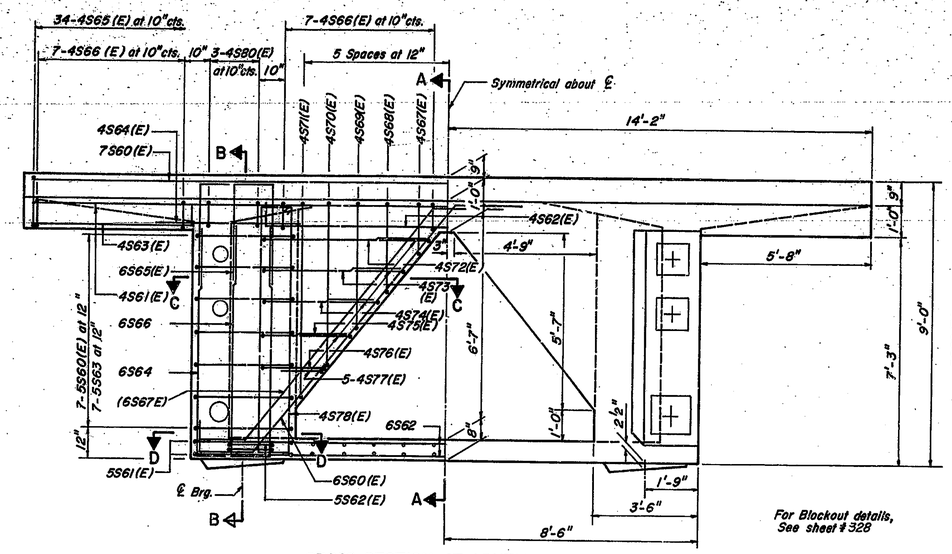

CROSS SECTION AT ABUTMENT DIAPHRAGM

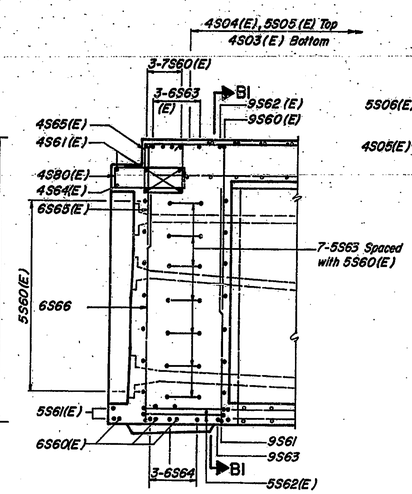

SECTION B-B

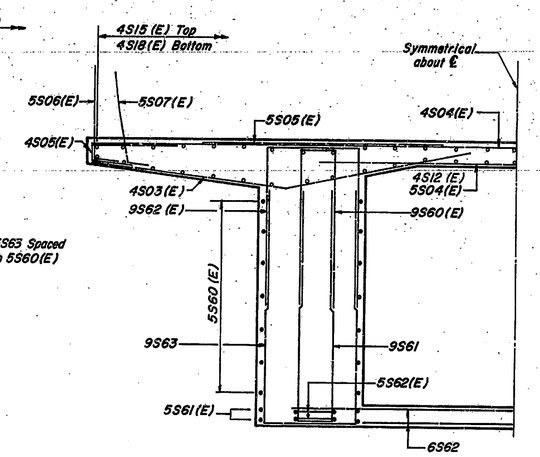

SECTION BI-BI

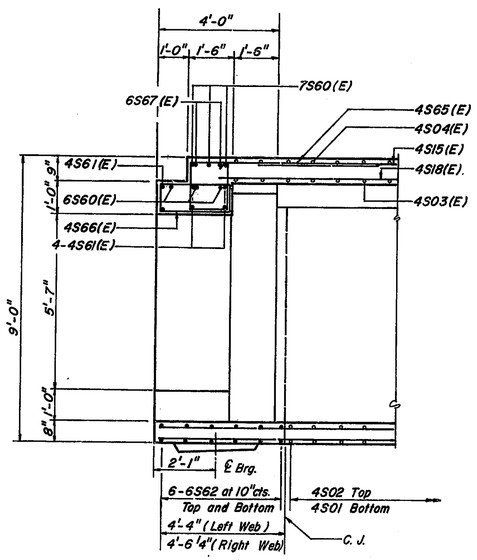

SECTION A-A

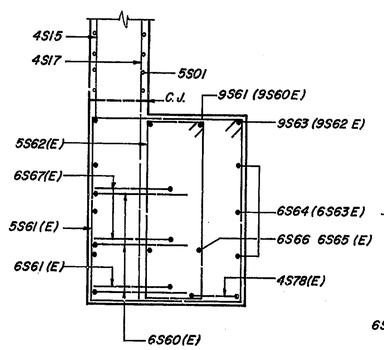

SECTION D-D

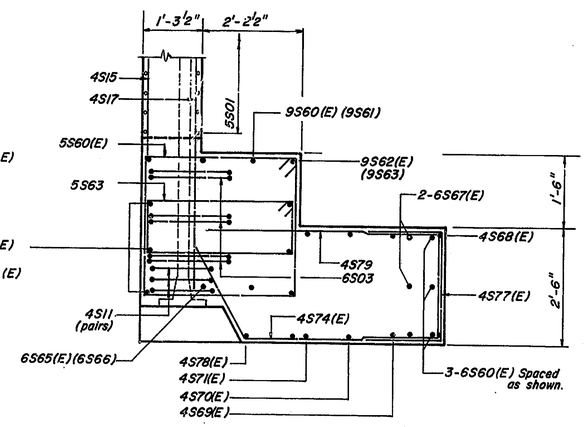

SECTION C-C

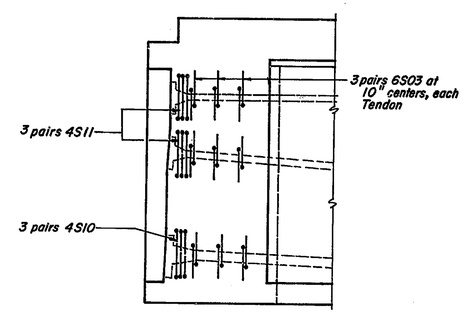

SECTION THRU TENDONS

APPROVED FOR CONSTRUCTION

W. B. Abbott 7-30-81

W. B. ABBOTT
Assistant Engineer of Bridge Design

DESIGNED MM	C'K'D MM		
DRAWN TF	C'K'D GR		
TRACED HG3	C'K'D GR		

Flagg and Muller Engineers Inc.
426 North Calhoun Street
Tallahassee Florida 32301

ABUTMENT DIAPHRAGM DETAILS UNIT VIII

INDIANA STATE HIGHWAY COMMISSION

LAKE COUNTY - RAMP:- C SECTION:-

SCALE:- NTS DATE:- MAY 26, 1981

SUBMITTED FOR APPROVAL Eugene C. Flagg Jr.

DRAWING:- OF SHEET:- 320 OF

PROJECT:- MM 220-1(8)

CONTRACT NO. B-12752

BRIDGE FILE:- 912-45-2546 REN

EUGENE C. FLAGG JR. REGISTERED No. 16543 STATE OF INDIANA PROFESSIONAL ENGINEER