BAR BENDING DIAGRAMS

NOTE:- Number preceding letter denotes bar size.
All dimensions are out to out.
All bar bending pin diameters shall be in accordance with A.C.I. Standards.

TYPICAL SECTION REINFORCEMENT

Bar	a	b
3S01	1'-1½"	1'-0"
4S13	6"	3'-4"
4S24(E)	2'-3"	1'-8"
5S01	1'-1½"	7'-4"
5S03	1'-1½"	3'-5"

3S01, 4S13, 4S24(E), 5S01, 5S03

Bar	a	b
3S02	1'-2"	4'-0"
4S09	8"	2'-8"

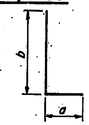

3S02, 4S09

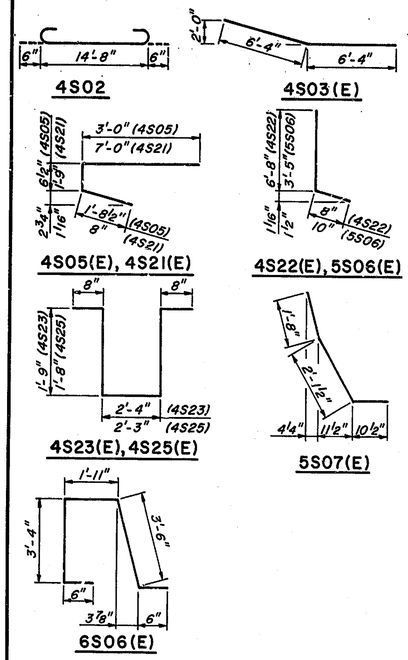

PIER DIAPHRAGM REINFORCEMENT

Bar	a	b	c
4S31	3'-3"	2'-4"	4½"
4S32	4'-0¼"	2'-4"	4½"
4S33	4'-10"	2'-4"	4½"
4S34	5'-7¾"	2'-4"	4½"
4S35	6'-5½"	2'-4"	4½"
4S36	7'-3¼"	2'-4"	4½"
4S39(E)	2'-3"	2'-4½"	4½"
4S40(E)	2'-3"	1'-6"	4½"
5S40	3'-3"	4'-10"	5½"

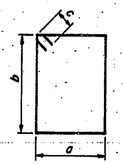

4S31 thru 4S36, 4S39(E), 4S40(E), 5S40

Bar	a	b
4S37(E)	4'-8½"	3'-0"
4S38(E)	2'-3"	3'-0"
4S41	2'-3"	2'-3"
4S42	2'-3"	3'-6"
4S43	2'-3"	4'-8"
4S44	2'-3"	5'-11"
4S48	4'-8½"	7'-3"
4S49	3'-11½"	7'-3"
4S50(E)	3'-11½"	3'-0"
11S40	2'-2½"	4'-10"

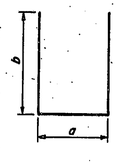

4S37(E), 4S38(E), 4S41 thru 4S44, 4S48, 4S49, 4S50(E), 11S40

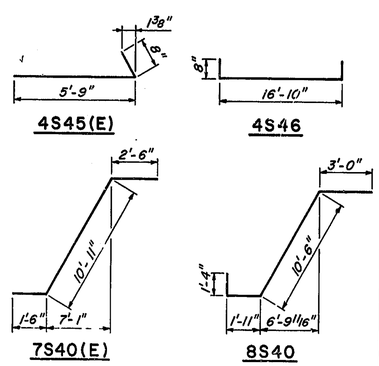

BILL OF MATERIAL

Bar	No.	Length	Bent	Str.
3S01	1440	3'-2"	•	
3S02	127	5'-2"	•	
4S01	134	16'-10"		•
4S02	127	16'-8"	•	
4S03(E)	268	12'-8"	•	
4S04(E)	134	28'-2"		•
4S05(E)	268	5'-3"	•	
4S06	14	4'-5"	•	
4S07	14	15'-3"	•	
4S08	8	11'-10"		•
4S09	254	3'-4"	•	
4S10	12	9'-0"	•	
4S11	24	8'-1"	•	
4S12	67	10'-8"		•
4S13	108	7'-2"	•	
4S14(E)	134	7'-9"		•
4S15	62	60'-0"		•
4S15(E)	58	60'-0"		•
4S16	62	20'-2"		•
4S17	62	32'-1"		•
4S18(E)	58	57'-6"		•
4S19	17	17'-0"		•
4S21(E)	2	9'-5"	•	
4S22(E)	2	7'-4"	•	
4S23(E)	7	7'-2"	•	
4S24(E)	1	5'-7"	•	
4S30(E)	28	12'-6"		•
4S31	8	11'-11"	•	
4S32	4	13'-6"	•	
4S33	4	15'-1"	•	
4S34	4	16'-9"	•	
4S35	4	18'-4"	•	
4S36	4	20'-0"	•	
4S37(E)	6	10'-9"	•	
4S38(E)	8	8'-3"	•	
4S39(E)	2	10'-0"	•	
4S40(E)	1	8'-3"	•	
4S41	2	6'-9"	•	
4S42	2	9'-3"	•	
4S43	2	11'-7"	•	
4S44	2	14'-1"	•	
4S45(E)	268	6'-5"	•	
4S46	7	18'-2"	•	
4S47	62	5'-6"		•
4S48	10	19'-3"	•	
4S49	4	17'-8"	•	
4S50(E)	4	3'-2"	•	

Bar	No.	Length	Bent	Str.
5S01	230	15'-10"	•	
5S02	38	16'-6"	•	
5S03(E)	270	8'-0"	•	
5S04(E)	67	10'-8"		•
5S05(E)	268	8'-0"		•
5S06(E)	268	4'-3"	•	
5S07(E)	268	4'-8"	•	
5S08(E)	38	9'-0"	•	
5S09	30	7'-9"		•
5S40	28	17'-1"	•	
6S01	28	16'-6"	•	
6S02(E)	28	9'-10"	•	
6S03	36	3'-10"	•	

Bar	No.	Length	Bent	Str.
6S08	12	17'-0"		•
7S01	5	19'-2"	•	
7S02	5	14'-8"		•
7S03(E)	2	12'-4"		•
7S04(E)	2	28'-2"		•
7S40(E)	4	14'-11"	•	
8S40	8	16'-9"	•	
11S40	2	11'-11"	•	
11S41(E)	4	24'-8"		•
11S42	2	16'-9"		•

CONSTRUCTION JOINT REINFORCEMENT

Bar	a	b
5S02	1'-10"	7'-4"
5S08(E)	1'-10"	3'-7"
6S01	1'-10"	7'-4"
6S02(E)	1'-10"	4'-0"
7S01	16'-10"	1'-2"

5S02, 5S08(E), 6S01, 6S01, 6S02(E)
6S03, 7S01

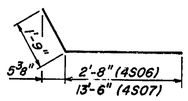

4S06, 4S07

4S10, 4S11

ESTIMATED QUANTITIES

Item	Unit	Total
Superstructure Concrete	Cu. Yd.	252.0
Reinforcing Steel	Lb.	19,889
Reinforcing Steel (Epoxy Coated)	Lb.	21,857

NOTES: All reinforcement bars shall conform to the requirements of ASTM Grade 60.
Minimum compressive strength of Superstructure Conc. shall be 5,500 p.s.i.

Figg and Muller Engineers Inc.
Consulting Engineers
Tallahassee Florida 32301

BAR BENDING DIAGRAMS & BILL OF MATERIAL - UNIT VII

INDIANA STATE HIGHWAY COMMISSION

LAKE COUNTY - RAMP:- C SECTION:-
SCALE:- N.T.S. DATE:- MAY 26, 1981
SUBMITTED FOR APPROVAL Eugene C. Figg Jr.
DRAWING:- OF SHEET:- 318 OF
PROJECT:- MM 220-1(8)
CONTRACT NO. B-12752
BRIDGE FILE:- 912-45-2546 REN

FOR CHIEF ENGINEER
W. O. Wolfe
Assistant Engineer Design 7-30-81

DESIGNED M.M. C'K'D M.M.
DRAWN R.E.T. C'K'D G.R.
TRACED N.D. C'K'D R.E.T.