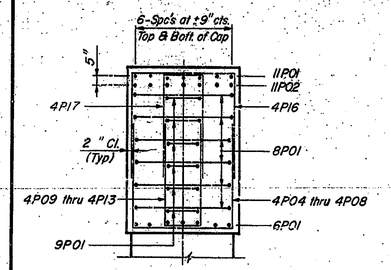

SECTION THRU CAP

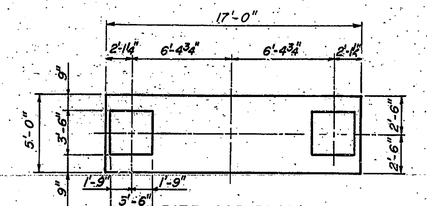

PIER CAP PLAN

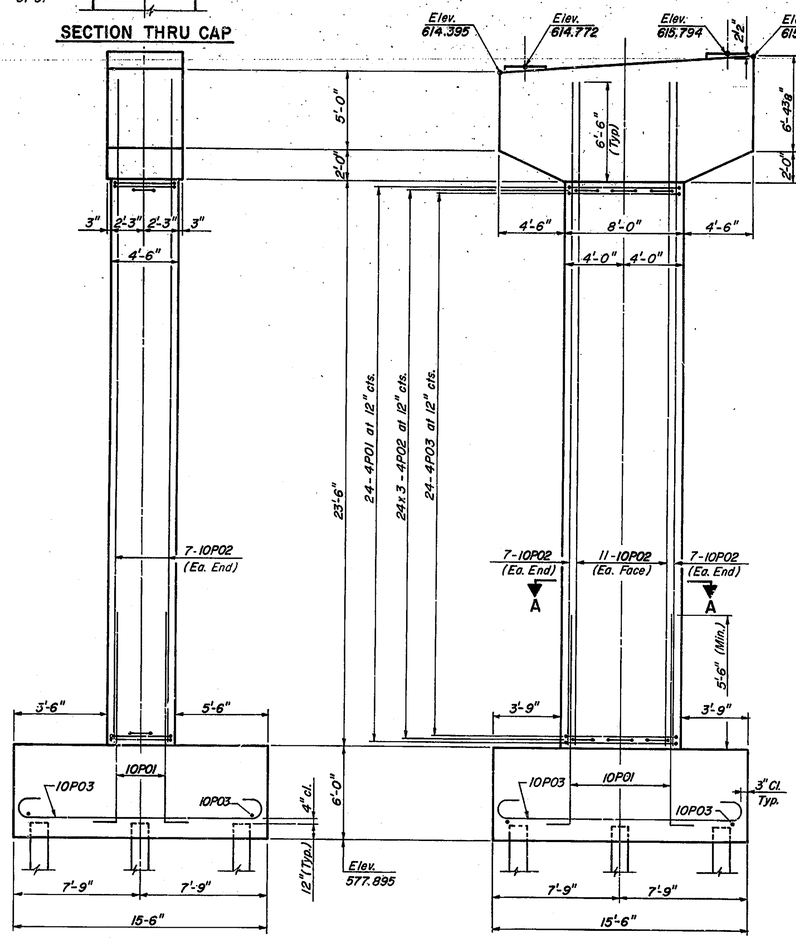

SIDE VIEW

ELEVATION
(Looking Up Station)

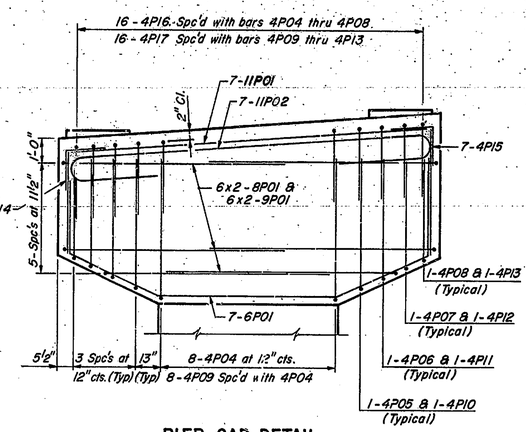

PIER CAP DETAIL

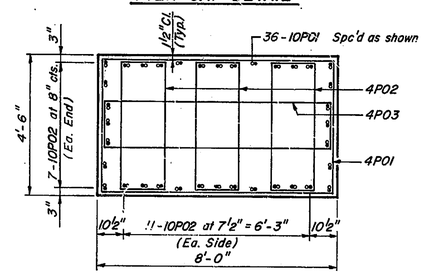

SECTION A-A

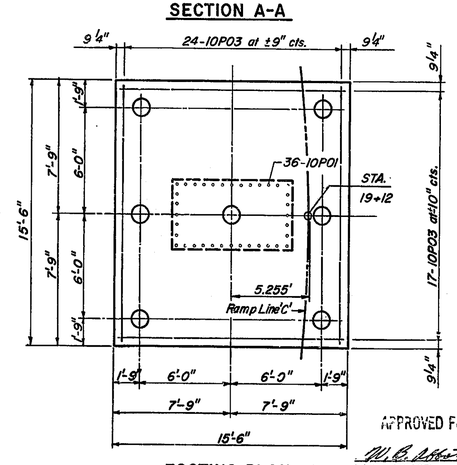

FOOTING PLAN

APPROVED FOR CONSTRUCTION
5-18-81
W. B. ABBOTT
Assistant Engineer of Bridge Design

PILE DATA

TYPE: High Capacity (14"ø Steel Encased Concrete)
ESTIMATED LENGTH: 85'
NUMBER REQUIRED: 7

BAR BENDING DIAGRAMS

NOTES: Number preceding letter denotes bar size.
All dimension are out to out.
All bar bending pin diameters shall be in accordance with A.C.I. Standards.

Bar	a	b
4P04	4'-8"	6'-6"
4P05	4'-8"	6'-0"
4P06	4'-8"	5'-6"
4P07	4'-8"	5'-0"
4P08	4'-8"	4'-6"
4P09	1'-9"	6'-6"
4P10	1'-9"	6'-0"
4P11	1'-9"	5'-6"
4P12	1'-9"	5'-0"
4P13	1'-9"	4'-6"
4P16	4'-8"	3'-3"
4P17	1'-9"	3'-3"
8P01	4'-7"	10'-2"
9P01	1'-8"	10'-5"

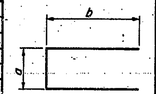

4P04 thru 4P13 & 4P16, 4P17, 8P01, 9P01

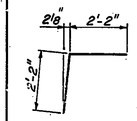

4P14

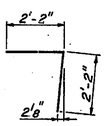

4P15

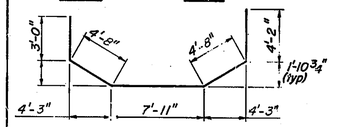

6P01

Bar	a	b
4P01	4'-3"	7'-9"
4P02	1'-6"	4'-3"
4P03	1'-7"	7'-9"

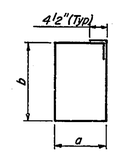

4P01, 4P02, 4P03

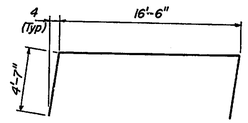

11P01

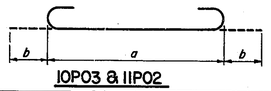

10P03 & 11P02

Bar	a	b
10P03	15'-0"	1'-5"
11P02	16'-6"	4'-7"

10P01

BILL OF MATERIAL

Bar	No.	Length	Bent	Str.
4P01	24	24'-9"	●	
4P02	72	12'-3"	●	
4P03	24	19'-5"	●	
4P04	8	17'-8"	●	
4P05	2	16'-8"	●	
4P06	2	15'-8"	●	
4P07	2	14'-8"	●	
4P08	2	13'-8"	●	
4P09	8	14'-9"	●	
4P10	2	13'-9"	●	
4P11	2	12'-9"	●	
4P12	2	11'-9"	●	
4P13	2	10'-9"	●	
4P14	7	4'-4"	●	
4P15	7	4'-4"	●	
4P16	16	11'-2"	●	
4P17	16	8'-3"	●	
6P01	7	24'-5"	●	
8P01	12	24'-11"	●	
9P01	12	22'-6"	●	
10P01	36	12'-4"	●	
10P02	36	30'-0"		●
10P03	41	17'-10"	●	
11P01	7	25'-8"	●	
11P02	7	25'-2"	●	

ESTIMATED QUANTITIES

Item	Unit	Total
Reinforcing Steel	Lb.	15,433
Substructure Conc.	Cu. Yd.	54.0
Footing Conc.	Cu. Yd.	53.1
High Capacity Piles	Lin. ft.	595

NOTE: All reinforcement bars shall conform to the requirements of ASTM, grade 60.
Minimum compressive strength of both Footing and Substructure concrete shall be 4,000 p.s.i.

DESIGNED HG/M.H. C'K'D. M.M.
DRAWN NBD C'K'D. G.R.
TRACED N.B.D. C'K'D. G.R.

Figg and Muller Engineers Inc.
424 North Calhoun Street
Milwaukee, Wisconsin 53202

PIER 403 DETAILS

INDIANA STATE HIGHWAY COMMISSION

LAKE COUNTY - RAMP:- C SECTION:-
SCALE:- NTS DATE:- MARCH 13, 1981
SUBMITTED FOR APPROVAL Eugene C. Figg Jr.
DRAWING:- OF SHEET:- 27 OF
PROJECT:- MM 220-1 (8)
CONTRACT NO. B-12752
BRIDGE FILE:- 912-45-2546 REN

EUGENE C. FIGG JR. REGISTERED