② * For drain in Unit VIII this dimension is 2'-7"

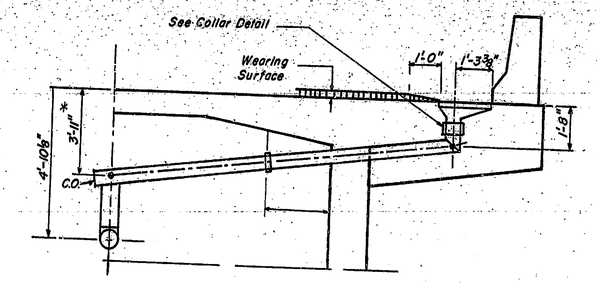

SECTION B-B

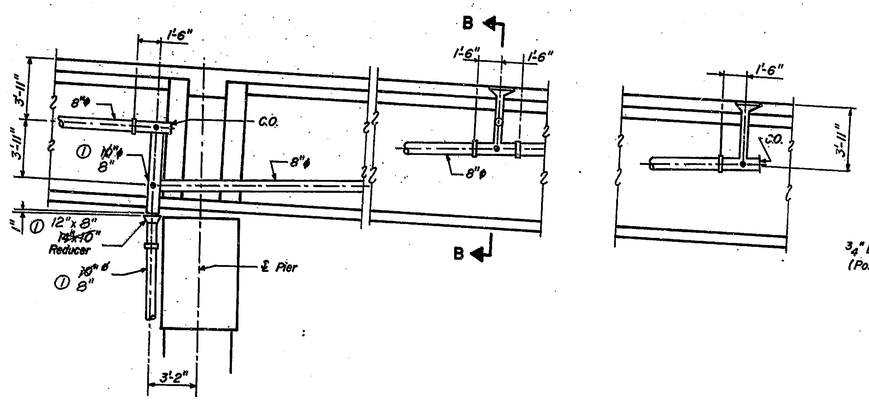

PIER 406

STATION INCREASE

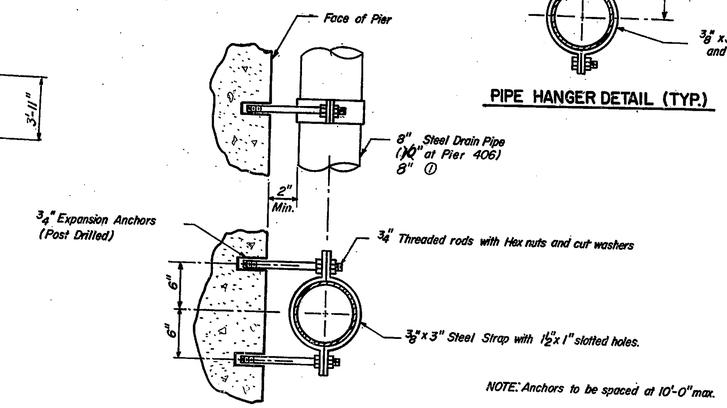

NOTE: Anchors to be spaced at 10'-0" max.

PIPE ANCHOR DETAIL (TYP.)

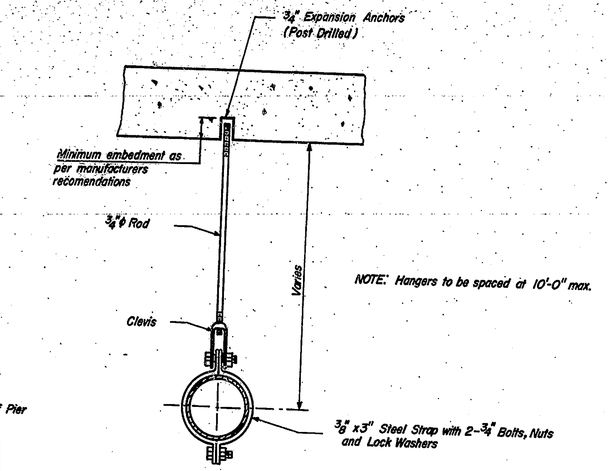

NOTE: Hangers to be spaced at 10'-0" max.

PIPE HANGER DETAIL (TYP.)

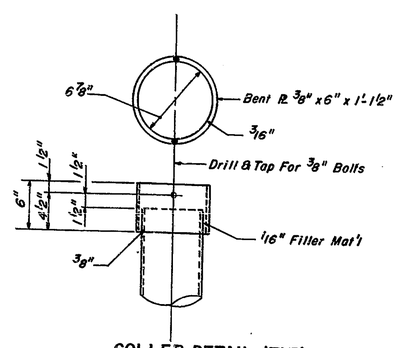

COLLER DETAIL (TYP)

APPROVED FOR CONSTRUCTION

F. L. DERTHICK 9-12-83
Engineer of Bridge Plans

APPROVED FOR CONSTRUCTION

W. B. ABBOTT 7-30-81
Chief Engineer of Bridge Design

DESIGNED	M.M.	C'K'D.	M.M.
DRAWN	T.F.	C'K'D.	G.R.
TRACED	NBD	C'K'D.	G.R.

① Revision 5/16/83 Drain Pipe
② Revision 9/7/83 Deck Drain Pipe Dimension.

Figg and Muller Engineers Inc.
424 North Calhoun Street
Tallahassee Florida 32301

SUPERSTRUCTURE DRAINAGE DETAIL II

INDIANA STATE HIGHWAY COMMISSION

LAKE COUNTY - RAMP:- C SECTION:-

SCALE:- N.T.S. DATE:- MAY 26, 1981

SUBMITTED FOR APPROVAL Eugene C. Figg Jr.

DRAWING:- OF SHEET:- 341 OF

PROJECT:- MM 220-1(8)

CONTRACT NO. B-12752

BRIDGE FILE:- 912-45-2546 REN

EUGENE C. FIGG JR. REGISTERED No 18543 STATE OF INDIANA PROFESSIONAL ENGINEER