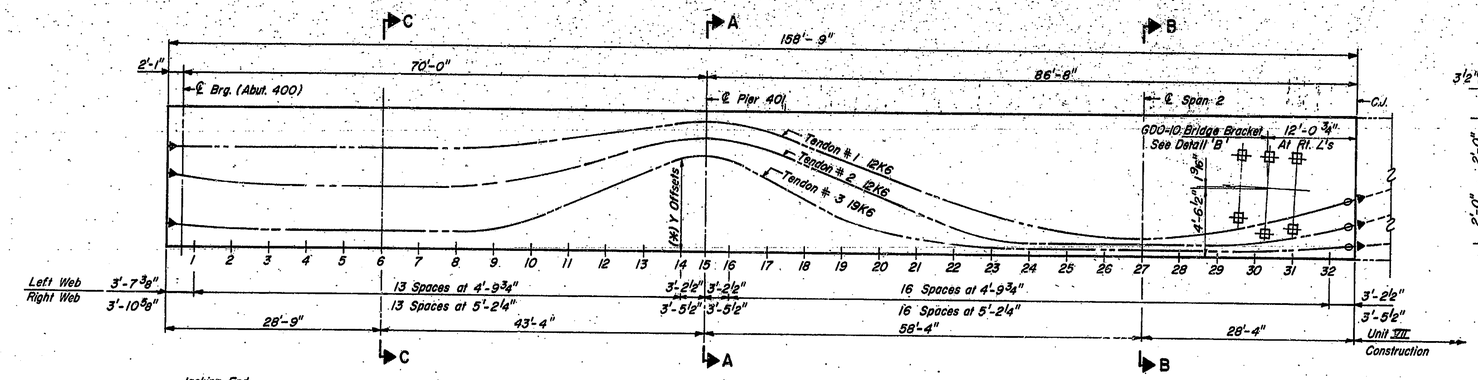

TENDON PROFILE ELEVATION

(Scale: Vert. 1/4" = 1'-0" Horiz. 1/8" = 1'-0")

(*) Y Offsets given are from bottom of slab to bottom of tendon ducts.

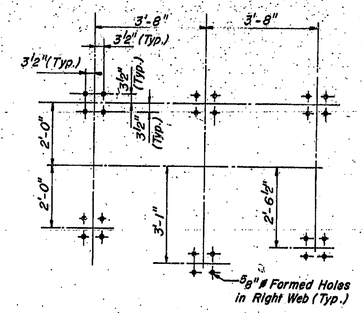

DETAIL 'B'

Location	(*) Y Offsets		
	TENDON 1	TENDON 2	TENDON 3
1	6.367	4.385	1.206
2	6.367	4.091	1.066
3	6.367	3.921	1.004
4	6.367	3.867	1.000
5	6.367	3.867	1.000
6	6.367	3.867	1.000
7	6.367	3.867	1.000
8	6.371	3.894	1.002
9	6.458	4.092	1.234
10	6.658	4.484	1.858
11	6.972	5.073	2.829
12	7.397	5.842	3.845
13	7.843	6.616	4.861
14	8.108	7.073	5.843
15	8.159	7.159	6.125
16	8.061	7.050	5.713
17	7.541	6.472	4.498
18	6.673	5.506	3.264
19	5.781	4.514	2.055
20	4.889	3.523	1.195
21	3.998	2.531	.762
22	3.110	1.548	.478
23	2.344	.860	.280
24	1.750	.617	.209
25	1.328	.617	.208
26	1.076	.617	.208
27	.992	.617	.208
28	1.076	.617	.208
29	1.328	.617	.208
30	1.750	.617	.209
31	2.344	.860	.280
32	3.110	1.548	.478

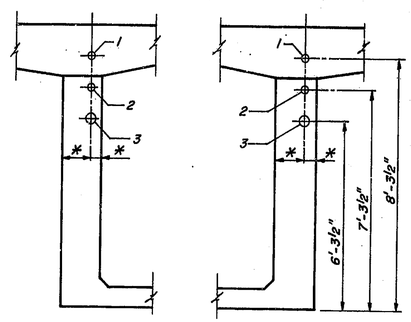

LEFT WEB RIGHT WEB

SECTION A-A

Looking Up Station

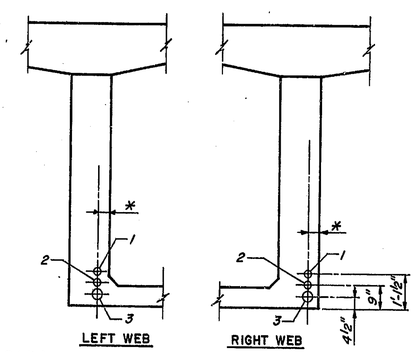

LEFT WEB RIGHT WEB

* See Detail A

SECTION B-B

Looking Up Station

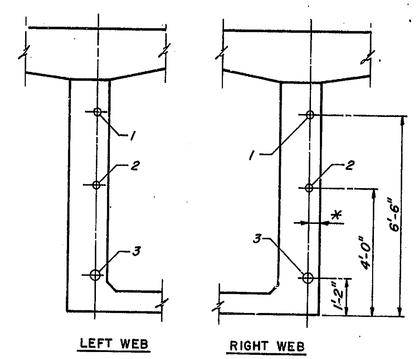

LEFT WEB RIGHT WEB

SECTION C-C

Looking Up Station

STRESSING SEQUENCE	TENDON NO.	TYPE	JACKING FORCE(K)	ELONGATION		LENGTH	
				LEFT	RIGHT	LEFT	RIGHT
1st	2	12K6	527	1.001	1.079	153.52	165.45
2nd	1	12K6	527	1.050	1.132	153.31	165.22
3rd	3	19K6	842	1.000	1.078	153.65	165.60
4th							
5th							

LEGEND

- Dead End
- Jacking End
- Post Tensioning Coupler

APPROVED FOR CONSTRUCTION

W. S. ARNOTT 7-30-81
Assistant Engineer of Bridge Design

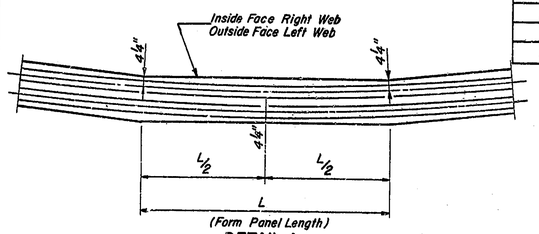

(Form Panel Length)

DETAIL A

Tendon Placement in Circular Sections (Not To Scale)

NOTES

- Tendons to be stressed from Jacking End as indicated by ▶ in Tendon Profile Elevation.
- Elongations and Lengths given from Anchor Plate to Anchor Plate.
- Elongations based on a steel modulus of elasticity of $26,500 \times 10^6$ p.s.i.
- Dimensions are horizontal, except as noted.

DESIGNED MM/DD C'K'D MM
DRAWN R.E.T. C'K'D M.M.
TRACED NBD C'K'D M.M.

Flog and Muller Engineers Inc.
424 North Calhoun Street
Tallahassee Florida 32301

POST TENSIONING LAYOUT - UNIT VIII

INDIANA STATE HIGHWAY COMMISSION

LAKE COUNTY - RAMP:- C SECTION:-
SCALE:- As Noted DATE:- MAY 26, 1981
SUBMITTED FOR APPROVAL Eugene C. Foley Jr.
DRAWING:- OF SHEET:- 336 OF
PROJECT:- MM 220-1 (8)
CONTRACT NO. B-12752
BRIDGE FILE:- 912-45-2546 REN

EUGENE C. FOLEY JR. REGISTERED No. 18543 STATE OF INDIANA PROFESSIONAL ENGINEER