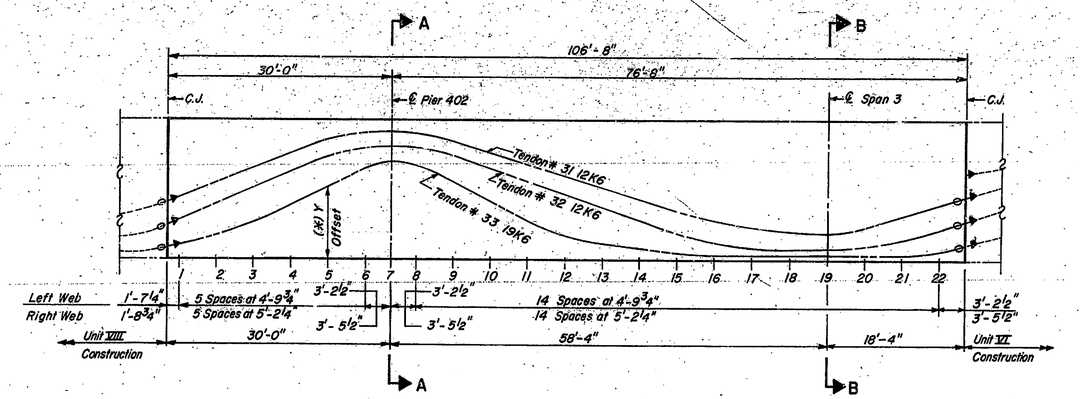

Jacking End

Dead End

(*) Y Offsets given are from bottom of slab to bottom of tendon ducts.

TENDON PROFILE ELEVATION

(Scale: Vert. ¼" = 1'-0"; Horiz. ⅛" = 1'-0")

Location	(*) Y Offsets		
	TENDON 31	TENDON 32	TENDON 33
1	3.995	2.528	0.761
2	4.886	3.520	1.197
3	5.778	4.511	2.058
4	6.670	5.503	3.264
5	7.537	6.471	4.475
6	8.059	7.050	5.690
7	8.156	7.156	6.125
8	8.067	7.058	5.798
9	5.605	6.549	4.625
10	6.835	5.698	3.466
11	6.043	4.823	2.328
12	5.252	3.948	1.469
13	4.460	3.073	0.961
14	3.668	2.199	0.575
15	2.929	1.459	0.303
16	2.350	0.950	0.209
17	1.938	0.672	0.209
18	1.693	0.615	0.209
19	1.615	0.615	0.209
20	1.833	0.759	0.209
21	2.487	1.193	0.304
22	3.312	1.912	0.577

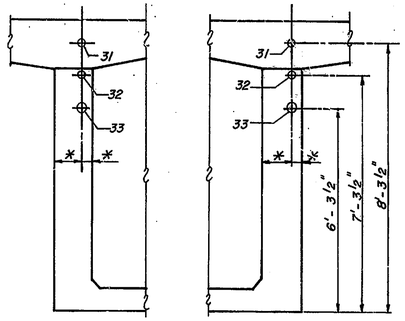

LEFT WEB

RIGHT WEB

SECTION A-A

Looking Up Station

* See Detail A

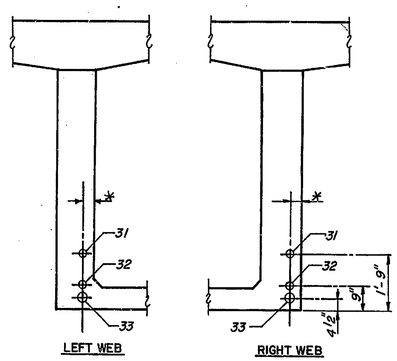

LEFT WEB

RIGHT WEB

SECTION B-B

Looking Up Station

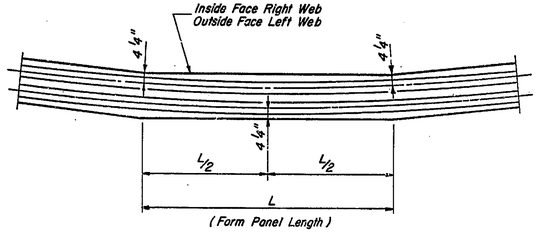

DETAIL A

Tendon Placement in Circular Sections
(Not To Scale)

STRESSING SEQUENCE	TENDON NO.	TYPE	JACKING FORCE(K)	ELONGATION		LENGTH	
				LEFT	RIGHT	LEFT	RIGHT
1st	32	12K6	536	0.720	0.776	103.70	111.76
2nd	31	12K6	536	0.724	0.781	103.62	111.67
3rd	33	19K6	882	0.719	0.775	103.75	111.82
4th							
5th							

NOTES

- Tendons to be stressed from Jacking End as indicated by ➔ in Tendon Profile Elevation.
- Elongations and Lengths given from Anchor Plate to Anchor Plate.
- Elongations based on a steel modulus of elasticity of $26,500 \times 10^6$ p.s.i.
- Dimensions are horizontal.

LEGEND

- Dead End
- Jacking End
- Post Tensioning Coupler

APPROVED

W. B. ABBOTT 7-30-81
Assist. Engineer of Bridge Design

Figg and Muller Engineers Inc.
424 Kern Calhoun Street
Tallahassee Florida 32301

POST TENSIONING LAYOUT – UNIT VII

INDIANA STATE HIGHWAY COMMISSION

LAKE COUNTY - RAMP:- C SECTION:-

SCALE:- As Noted DATE:- May 26, 1981

SUBMITTED FOR APPROVAL Eugene C. Figg Jr.

DRAWING:- OF SHEET:- 335 OF

PROJECT:- MM 220-1 (8)

CONTRACT NO. B-12752

BRIDGE FILE:- 912-45-2546 REN

EUGENE C. FIGG JR. REGISTERED STATE OF FLORIDA PROFESSIONAL ENGINEER

DESIGNED MM/DD C'K'D. MM
DRAWN R.E.T. C'K'D. MM
TRACED T.D.S. C'K'D. MM