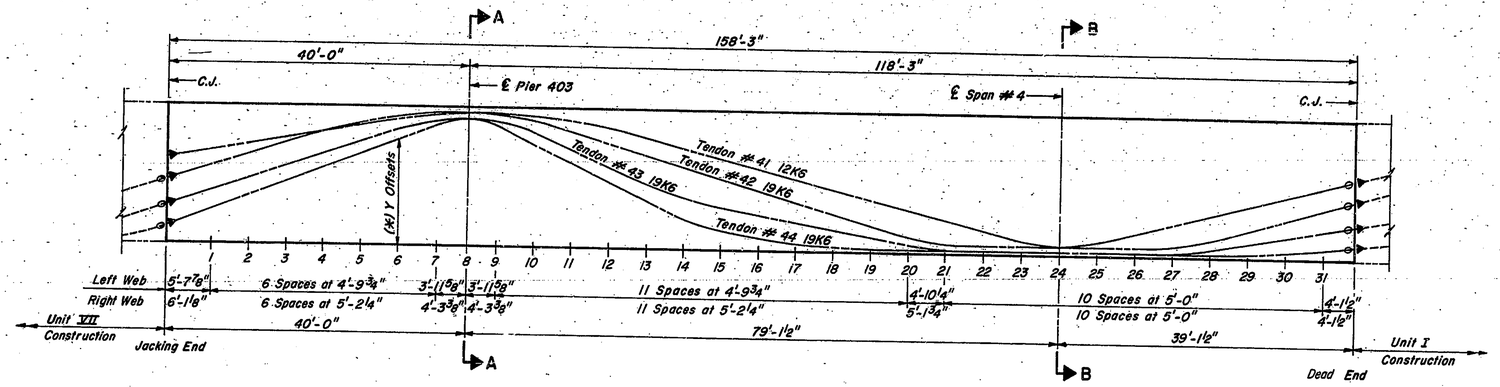

(*)- Y Offsets given are from bottom of slab to bottom of tendon ducts.

TENDON PROFILE ELEVATION

(Scale: Vert. ¼" = 1'-0"; Horiz. ⅛" = 1'-0")

Location	(*) Y Offsets			
	TENDON 41	TENDON 42	TENDON 43	TENDON 44
1	5.972	4.804	3.305	1.367
2	6.419	5.630	4.133	2.145
3	6.865	6.456	4.960	3.214
4	7.312	7.278	5.788	4.326
5	7.758	7.929	6.615	5.437
6	8.201	8.323	7.436	6.549
7	8.462	8.458	7.984	7.660
8	8.490	8.459	8.125	8.125
9	8.471	8.365	7.942	7.608
10	8.338	8.001	7.229	6.462
11	8.077	7.368	6.161	5.315
12	7.689	6.653	5.084	4.169
13	7.172	5.938	4.007	3.022
14	6.555	4.508	2.690	1.031
15	5.930	5.223	3.167	1.876
16	5.304	3.793	2.245	0.707
17	4.679	3.078	1.800	0.477
18	4.053	2.363	1.355	0.299
19	3.428	1.648	0.910	0.215
20	2.802	0.944	0.465	0.209
21	2.177	0.593	0.214	0.209
22	1.551	0.584	0.209	0.209
23	0.941	.584	0.209	0.209
24	0.696	0.584	0.209	0.209
25	0.941	0.584	0.209	0.209
26	1.549	0.584	0.209	0.209
27	2.174	0.593	0.214	0.209
28	2.800	0.944	0.465	0.209
29	3.425	1.646	0.910	0.215
30	4.051	2.361	1.355	0.299
31	4.676	3.076	1.800	0.477

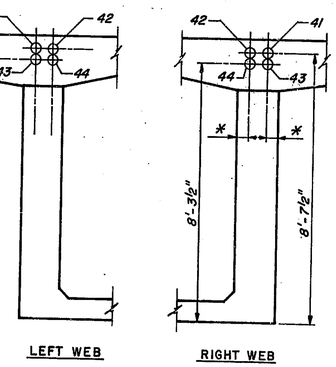

SECTION A-A

Looking Up Station

* See Detail A

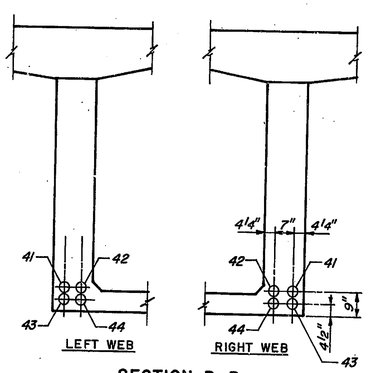

SECTION B-B

Looking Up Station

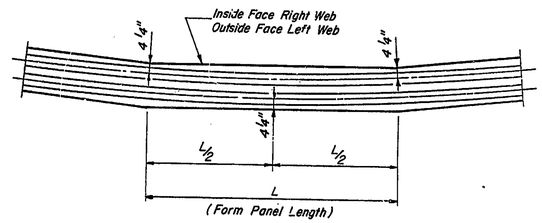

DETAIL A

Tendon Placement in Circular Section (Not To Scale)

STRESSING SEQUENCE	TENDON NO.	TYPE	JACKING FORCE(K)	ELONGATION		LENGTH	
				LEFT	RIGHT	LEFT	RIGHT
1st	42	19K6	842	1.063	1.116	155.45	163.10
2nd	43	19K6	842	1.042	1.093	155.52	163.16
3rd	41	12K6	527	1.069	1.122	155.24	162.88
4th	44	19K6	869	1.018	1.068	155.87	163.54
5th							

NOTES

- Tendons to be stressed from Jacking End as indicated by ►— in Tendon Profile Elevation.
- Elongations and Lengths given from Anchor Plate to Anchor Plate.
- Elongations based on a steel modulus of elasticity of $26,500 \times 10^6$ p.s.i.
- Dimensions are horizontal.

LEGEND

- —►— Dead End
- —▶— Jacking End
- —o— Post Tensioning Coupler

APPROVED FOR CONSTRUCTION

W. B. ABBOTT 7-30-81

Assistant Engineer of Bridge Design

Figg and Muller Engineers Inc.
424 North Calhoun Street
Tallahassee Florida 32301

POST TENSIONING LAYOUT - UNIT VI

INDIANA STATE HIGHWAY COMMISSION

LAKE COUNTY - RAMP:- C SECTION:-

SCALE:- AS NOTED DATE:- MAY 26, 1981

SUBMITTED FOR APPROVAL

DRAWING:- OF SHEET:- 334 OF

PROJECT:- MM 220 - 1(8)

CONTRACT NO. B-12752

BRIDGE FILE:- 912-45-2546 REN

EUGENE C. FIGG JR. REGISTERED No. 18543 STATE OF FLORIDA PROFESSIONAL ENGINEER

DESIGNED MM/DD C'K'D MM
DRAWN R.E.T. C'K'D MM
TRACED R.E.T. C'K'D MM