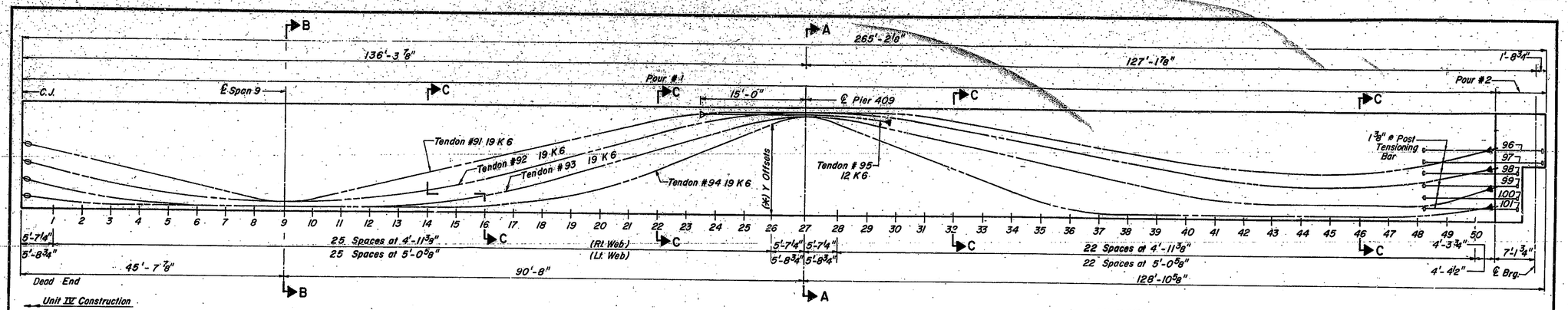

TENDON PROFILE ELEVATION

(Scale: Vert. 1/4"=1'-0"; Horiz. 1/8"=1'-0")

(*) - Y Offsets given are from bottom of slab to bottom of Tendon ducts.

Location	(*) Y Offsets				
	TENDON 91	TENDON 92	TENDON 93	TENDON 94	TENDON 95
1	4.817	3.235	1.691	0.585	
2	4.215	2.604	1.096	0.334	
3	3.613	2.058	0.653	0.217	
4	3.011	1.598	0.362	0.209	
5	2.409	1.224	0.222	0.209	
6	1.807	0.936	0.209	0.209	
7	1.205	0.733	0.209	0.209	
8	0.719	0.616	0.209	0.209	
9	0.584	0.584	0.209	0.209	
10	0.719	0.616	0.209	0.209	
11	1.205	0.733	0.209	0.209	
12	1.807	0.936	0.209	0.209	
13	2.409	1.224	0.222	0.209	
14	3.011	1.598	0.362	0.209	
15	3.613	2.058	0.653	0.217	
16	4.215	2.603	1.096	0.334	
17	4.817	3.235	1.691	0.585	
18	5.419	3.910	2.404	0.950	
19	6.021	4.586	3.125	1.334	
20	6.623	5.261	3.846	1.873	
21	7.225	5.937	4.567	2.624	
22	7.748	6.612	5.288	3.565	
23	8.128	7.256	6.009	4.537	
24	8.364	7.768	6.730	5.508	8.221
25	8.457	8.138	7.440	6.480	8.221
26	8.459	8.368	7.931	7.679	8.221
27	8.459	8.459	8.125	8.125	8.221
28	8.459	8.459	7.982	7.506	7.954
29	8.459	8.380	7.620	6.596	7.285
30	8.413	8.123	7.096	5.686	
31	8.204	7.711	6.564	4.776	
32	7.837	7.279	6.032	3.866	
33	7.433	6.848	5.500	2.956	
34	7.029	6.416	4.968	2.046	
35	6.625	5.985	4.436	1.220	
36	6.221	5.553	3.904	0.637	
37	5.817	5.122	3.372	0.301	
38	5.413	4.690	2.840	0.209	
39	5.009	4.259	2.309	0.209	
40	4.605	3.827	1.848	0.209	
41	4.236	3.398	1.497	0.209	
42	3.989	3.056	1.257	0.209	
43	3.871	2.852	1.129	0.209	
44	3.882	2.785	1.104	0.209	
45	4.023	2.856	1.104	0.209	
46	4.292	3.064	1.104	0.209	
47	4.690	3.410	1.104	0.209	
48	5.217	3.884	1.244	0.297	
49	5.831	4.385	1.851	0.682	
50	6.447	4.885	2.800	1.284	

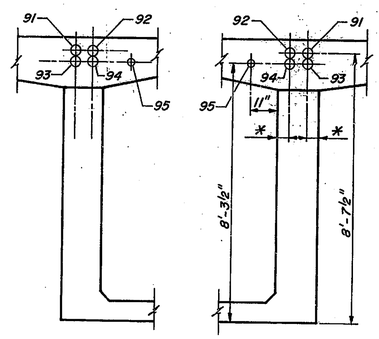

SECTION A-A

Looking Up Station

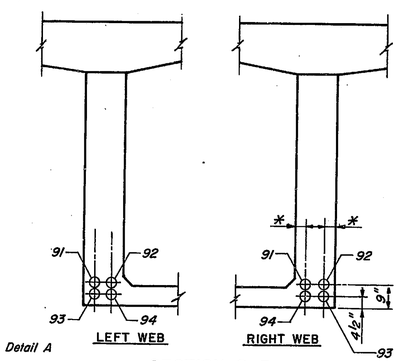

* See Detail A

SECTION B-B

Looking Up Station

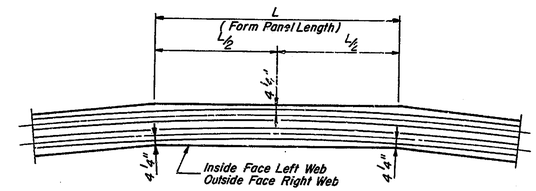

DETAIL A

Tendon Placement in Circular Sections
(Not To Scale)

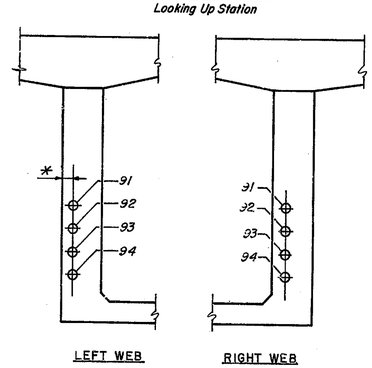

SECTION C-C

Looking Up Station

STRESSING SEQUENCE	TENDON NO.	TYPE	JACKING FORCE(K)	ELONGATION		LENGTH	
				LEFT	RIGHT	LEFT	RIGHT
1st	92	19K6	842	1.680	1.643	260.29	254.58
2nd	93	19K6	842	1.635	1.599	260.53	254.80
3rd	91	19K6	842	1.681	1.644	260.38	254.67
4th	94	19K6	842	1.612	1.577	260.77	255.04
5th	95	12K6	545	0.209	0.205	30.43	29.76

NOTES

- Tendons to be stressed from Jacking End as indicated by ➔ in Tendon Profile Elevation.
- Elongations and Lengths given from Anchor Plate to Anchor Plate.
- Elongations based on a steel modulus of elasticity of $26,500 \times 10^6$ p.s.i.
- Dimensions are horizontal.

LEGEND

- Dead End
- Jacking End
- Post Tensioning Coupler

APPROVED FOR CONSTRUCTION

W. B. ABBOTT 7-30-81
Assistant Engineer of Bridge Design

Figg and Muller Engineers Inc.
4700 Gaskin Place
Tallahassee Florida 32301

POST TENSIONING LAYOUT - UNIT V

INDIANA STATE HIGHWAY COMMISSION

LAKE COUNTY - RAMP:- C SECTION:-

SCALE:- AS NOTED DATE:- MAY 26, 1981

SUBMITTED FOR APPROVAL Eugene C. Figg, Jr.

DRAWING:- OF SHEET:- 333 OF

PROJECT:- MM 220-1(8)

CONTRACT NO. B-12752

BRIDGE FILE:- 912-45-2546 REN

EUGENE C. FIGG, JR. REGISTERED No. 18541 STATE OF INDIANA PROFESSIONAL ENGINEER

DESIGNED M.M. C'K'D. MM
DRAWN R.E.T. C'K'D. MM
TRACED H.G. C'K'D. MM