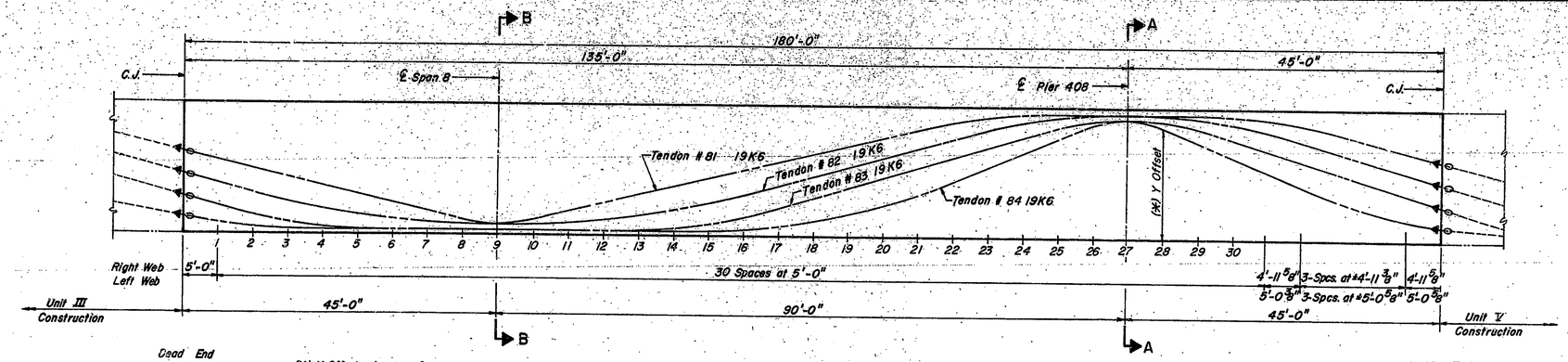

(*)-Y Offsets given are from bottom slab to bottom of tendon ducts.

TENDON PROFILE ELEVATION

(Scale : Vert. 1/4"=1'-0" ; Horiz. 1/8"=1'-0")

Location	(*) Y Offsets			
	TENDON 81	TENDON 82	TENDON 83	TENDON 84
1	4.898	3.325	1.782	0.629
2	4.296	2.683	1.167	0.360
3	3.694	2.126	0.704	0.225
4	3.092	1.654	0.392	0.209
5	2.490	1.269	0.232	0.209
6	1.888	0.969	0.209	0.209
7	1.286	0.755	0.209	0.209
8	0.764	0.626	0.209	0.209
℄ Span 9	0.584	0.583	0.209	0.209
10	0.764	0.626	0.209	0.209
11	1.286	0.755	0.209	0.209
12	1.888	0.969	0.209	0.209
13	2.490	1.269	0.232	0.209
14	3.092	1.654	0.392	0.209
15	3.694	2.126	0.704	0.225
16	4.296	2.683	1.167	0.360
17	4.898	3.325	1.782	0.629
18	5.500	4.000	2.500	1.000
19	6.102	4.676	3.221	1.393
20	8.704	5.351	3.942	1.961
21	7.303	6.027	4.663	2.740
22	7.807	6.702	5.384	3.695
23	8.168	7.333	6.105	4.666
24	8.385	7.825	6.826	5.638
25	8.459	8.177	7.524	6.609
26	8.459	8.388	7.975	7.581
℄-408 27	8.459	8.459	8.125	8.125
28	8.459	8.388	7.975	7.581
29	8.459	8.177	7.524	6.609
30	8.385	7.825	6.826	5.638
31	8.167	7.333	6.105	4.666
32	7.807	6.702	5.384	3.695
33	7.303	6.027	4.663	2.740
34	6.703	5.351	3.942	1.960
35	6.101	4.676	3.221	1.393
36	5.499	4.000	2.500	0.999

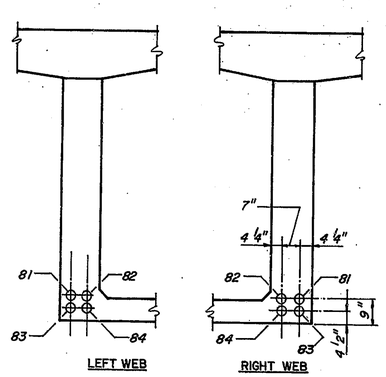

SECTION B-B

Looking Up Station

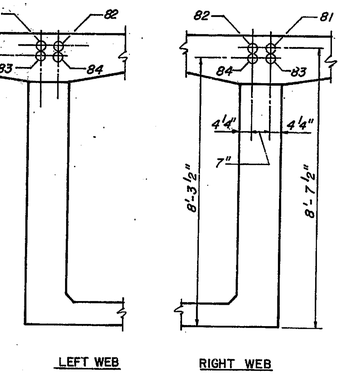

SECTION A-A

Looking Up Station

STRESSING SEQUENCE	TENDON NO.	TYPE	JACKING FORCE (K)	ELONGATION	LENGTH
1st	82	19K6	842	1.212	181.12
2nd	83	19K6	828	1.193	181.26
3rd	81	19K6	842	1.223	181.11
4th	84	19K6	856	1.158	181.53
5th					

NOTES

- Tendons to be stressed from Jacking End as indicated by ➔ in Tendon Profile Elevation.
- Elongations and Lengths given from Anchor Plate to Anchor Plate.
- Elongations based on a steel modulus of elasticity of $26,500 \times 10^6$ p.s.i.
- Dimensions are horizontal.

LEGEND

- Dead End
- Jacking End
- Post Tension Coupler

APPROVED FOR CONSTRUCTION

W. S. ABBOTT 7-30-81
Assistant Engineer of Bridge Design

Figg and Muller Engineers Inc.
428 North Calhoun Street
Tallahassee Florida 32301

POST TENSIONING LAYOUT - UNIT IV

INDIANA STATE HIGHWAY COMMISSION

LAKE COUNTY - RAMP:- C SECTION:-

SCALE:- DATE:- MAY 26, 1981

SUBMITTED FOR APPROVAL Eugene C. Figg Jr.

DRAWING:- OF SHEET:- 332 OF

PROJECT:- MM 220-1 (8)

CONTRACT NO. B-12750

BRIDGE FILE:- 912-45-2546 REN

EUGENE C. FIGG, JR. REGISTERED No 11141 STATE OF INDIANA PROFESSIONAL ENGINEER

DESIGNED MM/DD C'K'D. MM
DRAWN RT C'K'D. MM
TRACED HGB C'K'D. MM