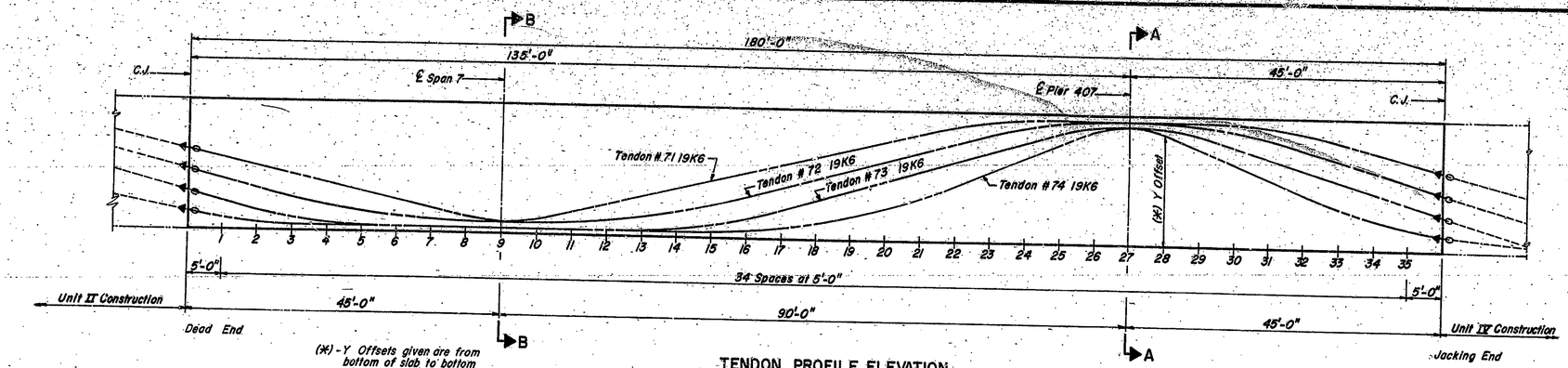

(*) - Y Offsets given are from bottom of slab to bottom of tendon ducts.

TENDON PROFILE ELEVATION

(Scale: Vert. 1/4" = 1'-0", Horiz. 1/8" = 1'-0")

Location	(*) Y Offsets			
	TENDON 71	TENDON 72	TENDON 73	TENDON 74
1	4.898	3.325	1.782	0.629
2	4.296	2.683	1.167	0.360
3	3.694	2.126	0.704	0.225
4	3.092	1.654	0.392	0.209
5	2.490	1.269	0.232	0.209
6	1.888	0.969	0.209	0.209
7	1.286	0.755	0.209	0.209
8	0.764	0.626	0.209	0.209
9	0.584	0.583	0.209	0.209
10	0.764	0.626	0.209	0.209
11	1.286	0.755	0.209	0.209
12	1.888	0.969	0.209	0.209
13	2.490	1.269	0.232	0.209
14	3.092	1.654	0.392	0.209
15	3.694	2.126	0.704	0.225
16	4.296	2.683	1.167	0.360
17	4.898	3.325	1.782	0.629
18	5.500	4.000	2.500	1.000
19	6.102	4.676	3.221	1.393
20	6.704	5.351	3.942	1.961
21	7.303	6.027	4.663	2.740
22	7.807	6.702	5.384	3.695
23	8.168	7.333	6.105	4.666
24	8.385	7.825	6.826	5.638
25	8.459	8.177	7.524	6.609
26	8.459	8.388	7.975	7.581
27	8.459	8.459	8.125	8.125
28	8.459	8.388	7.975	7.581
29	8.459	8.177	7.524	6.609
30	8.385	7.825	6.826	5.638
31	8.167	7.333	6.105	4.666
32	7.807	6.702	5.384	3.695
33	7.303	6.027	4.663	2.740
34	6.703	5.351	3.942	1.960
35	6.101	4.676	3.221	1.393
36	5.499	4.000	2.500	0.999

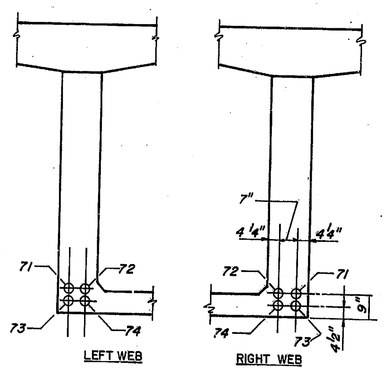

SECTION B-B

Looking Up Station

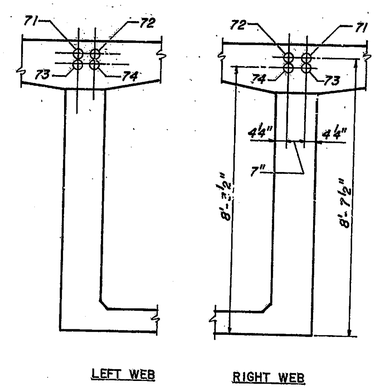

SECTION A-A

Lookin Up Station

STRESSING SEQUENCE	TENDON NO.	TYPE	JACKING FORCE (K)	ELONGATION	LENGTH
1st	72	19K6	842	1.212	180.87
2nd	73	19K6	828	1.193	181.01
3rd	71	19K6	842	1.223	180.86
4th	74	19K6	856	1.158	181.28
5th					

NOTES

- Tendons to be stressed from Jacking End as indicated by ➔ in Tendon Profile Elevation.
- Elongations and Lengths given from Anchor Plate to Anchor Plate.
- Elongations based on a steel modulus of elasticity of $26,500 \times 10^6$ p.s.i.
- Dimensions are horizontal.

LEGEND

- Dead End
- Jacking End
- Post Tension Coupler

APPROVED FOR CONSTRUCTION

W. B. ABBOTT — 7-30-81

DESIGNED MM/DD C'K'D. MM
DRAWN Dr C'K'D. M.M.
TRACED HGS. C'K'D. M.M.

Figg and Muller Engineers Inc.
428 North Gallows Road
Vienna, Virginia 22180

POST TENSIONING LAYOUT - UNIT III

INDIANA STATE HIGHWAY COMMISSION

LAKE COUNTY - RAMP:- C SECTION:-

SCALE:- DATE:- MAY 26, 1981

SUBMITTED FOR APPROVAL Eugene C. Figg

DRAWING:- OF SHEET:- 331 OF

PROJECT:- MM 2201(8)

CONTRACT NO. B-12752

BRIDGE FILE:- 912-45-2546 REN

EUGENE C. FIGG REGISTERED 17481 STATE OF VIRGINIA PROFESSIONAL ENGINEER