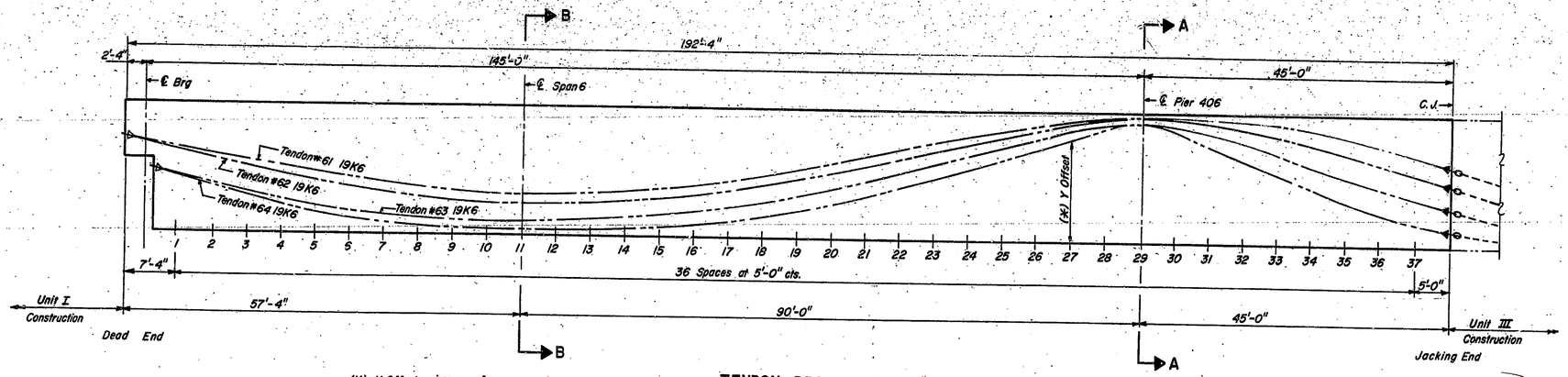

(*)- Y Offsets given are from bottom of slab to bottom of tendon ducts.

TENDON PROFILE ELEVATION

(Scale: Vert. 1/4" = 1'-0" Horiz. 1/8" = 1'-0")

Location	(*) Y Offsets			
	TENDON 61	TENDON 62	TENDON 63	TENDON 64
1	6.026	5.875	3.604	3.564
2	5.608	5.342	3.140	2.923
3	5.190	4.810	2.676	2.294
4	4.772	4.277	2.212	1.741
5	4.354	3.745	1.770	1.273
6	3.936	3.226	1.409	0.889
7	3.518	2.793	1.131	0.591
8	3.129	2.456	0.938	0.379
9	2.849	2.215	0.829	0.251
10	2.681	2.070	0.802	0.209
11	2.625	2.021	0.802	0.209
12	2.656	2.052	0.833	0.209
13	2.750	2.146	0.927	0.218
14	2.907	2.303	1.082	0.290
15	3.127	2.523	1.300	0.434
16	3.410	2.806	1.580	0.650
17	3.756	3.152	1.922	0.938
18	4.164	3.561	2.326	1.297
19	4.636	4.033	2.793	1.729
20	5.139	4.536	3.321	2.233
21	5.642	5.039	3.912	2.809
22	6.145	5.542	4.532	3.456
23	6.648	6.045	5.151	4.167
24	7.151	6.548	5.771	4.886
25	7.620	7.051	6.390	5.606
26	7.987	7.554	7.010	6.325
27	8.249	8.039	7.608	7.045
28	8.406	8.354	7.995	7.764
29	8.459	8.459	8.125	8.125
30	8.459	8.388	7.974	7.577
31	8.459	8.177	7.523	6.606
32	8.385	7.825	6.825	5.634
33	8.167	7.333	6.104	4.663
34	7.807	6.702	5.383	3.691
35	7.303	6.027	4.662	2.740
36	6.703	5.351	3.941	1.961
37	6.101	4.676	3.220	1.393

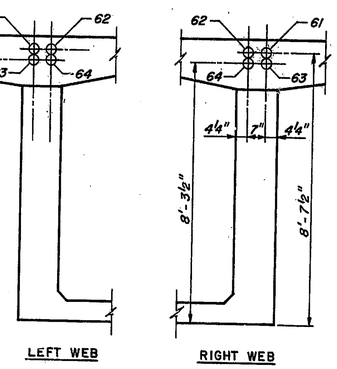

SECTION A-A

Looking Up Station

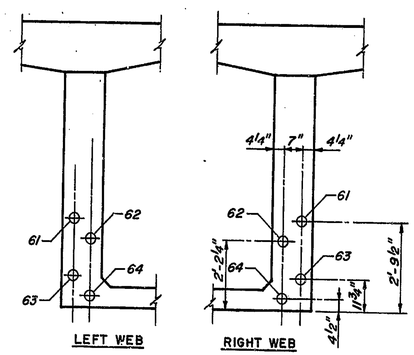

SECTION B-B

Looking Up Station

STRESSING SEQUENCE	TENDON NO.	TYPE	JACKING FORCE (K)	ELONGATION	LENGTH
1st	62	19K6	842	1.293	192.43
2nd	63	19K6	828	1.243	188.34
3rd	61	19K6	842	1.297	192.22
4th	64	19K6	856	1.220	188.73
5th					

NOTES

- Tendons to be stressed from Jacking End as indicated by ▶ in Tendon Profile Elevation.
- Elongations and Lengths given from Anchor Plate to Anchor Plate.
- Elongations based on a steel modulus of elasticity of 26,500 x 10^6 p.s.i.
- Dimensions are horizontal.

LEGEND

- Dead End
- Jacking End
- Post Tensioning Coupler

APPROVED FOR CONSTRUCTION

W. B. ABBOTT 7-30-81
Assistant Engineer of Bridge Design

Figg and Muller Engineers Inc.
224 North Calhoun Street
Tallahassee - Florida 32301

DESIGNED MM/DD C'K'D MM
DRAWN R.E.T. C'K'D MM
TRACED ABD C'K'D MM

POST TENSIONING LAYOUT - UNIT II

INDIANA STATE HIGHWAY COMMISSION

LAKE COUNTY - RAMP:- C SECTION:-
SCALE:- As Noted DATE:- MAY 26, 1981
SUBMITTED FOR APPROVAL Eugene C. Figg Jr.
DRAWING:- OF SHEET:- 330 OF
PROJECT:- MM 220-1 (6)
CONTRACT NO. B-12752
BRIDGE FILE:- 912-45-2546 REN

EUGENE C. FIGG, JR. REGISTERED NO 15141 STATE OF INDIANA PROFESSIONAL ENGINEER