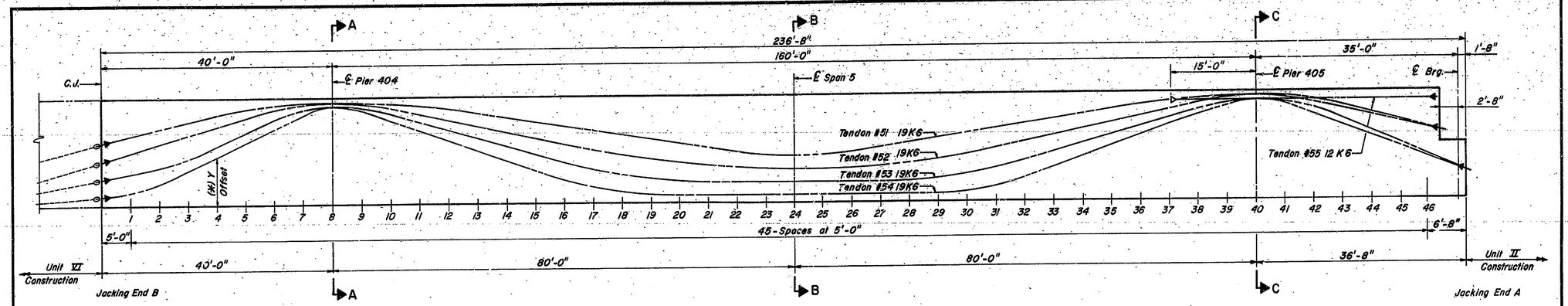

(*)-Y Offsets given are from bottom of slab to bottom of tendon duct.

TENDON PROFILE ELEVATION

(Scale: Vert. 1/4" = 1'-0" Horiz. 1/8" = 1'-0")

Location	(*) Y Offsets			
	TENDON 51	TENDON 52	TENDON 53	TENDON 54
1	5.792	4.381	2.612	0.942
2	6.417	5.096	3.066	1.687
3	7.030	5.811	3.827	2.822
4	7.544	6.526	4.895	3.968
5	7.944	7.241	5.972	5.115
6	8.230	7.907	7.049	6.261
7	8.401	8.321	7.856	7.408
℄ 404-8	8.459	8.459	8.125	8.125
9	8.420	8.331	7.957	7.722
10	8.304	7.947	7.454	6.883
11	8.110	7.429	6.770	6.043
12	7.839	6.911	6.085	5.203
13	7.491	6.393	5.401	4.363
14	7.105	5.875	4.716	3.523
15	6.720	5.357	4.031	2.683
16	6.334	4.839	3.349	1.847
17	5.949	4.340	2.751	1.180
18	5.563	3.907	2.280	0.760
19	5.178	3.541	1.936	0.587
20	4.792	3.241	1.718	0.583
21	4.407	3.007	1.628	0.583
22	4.047	2.841	1.625	0.583
23	3.824	2.741	1.625	0.583
℄ Span-24	3.749	2.708	1.625	0.583
25	3.824	2.741	1.625	0.583
26	4.047	2.841	1.625	0.583
27	4.407	3.007	1.628	0.583
28	4.792	3.241	1.718	0.583
29	5.178	3.541	1.936	0.587
30	5.563	3.907	2.280	0.760
31	5.949	4.340	2.751	1.180
32	6.334	4.839	3.349	1.847
33	6.720	5.357	4.031	2.683
34	7.105	5.875	4.716	3.523
35	7.491	6.393	5.400	4.363
36	7.839	6.911	6.085	5.203
37	8.110	7.429	6.769	6.043
38	8.304	7.947	7.454	6.883
39	8.420	8.331	7.957	7.722
℄ 405-40	8.459	8.459	8.125	8.125
41	8.402	8.376	7.954	7.806
42	8.234	8.127	7.441	6.950
43	7.952	7.731	6.585	6.034
44	7.559	7.311	5.538	5.117
45	7.055	6.892	4.490	4.201
46	6.515	6.472	3.442	3.284
47			2.394	2.368

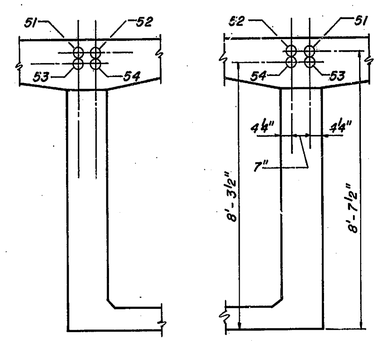

LEFT WEB RIGHT WEB

SECTION A-A

Looking Up Station

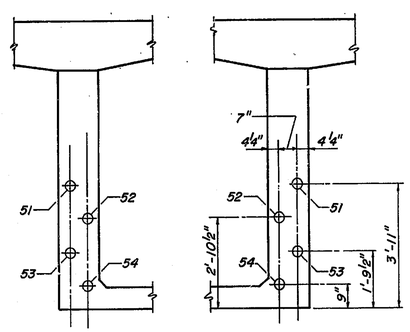

LEFT WEB RIGHT WEB

SECTION B-B

Looking Up Station

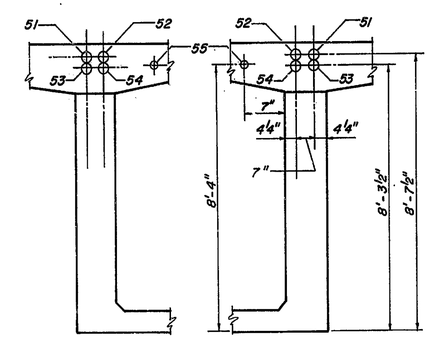

LEFT WEB RIGHT WEB

SECTION C-C

*

Tendon No.	Elongation Jacking End A	Elongation Jacking End B
52	1.473'	0.131'
53	1.532'	0.099'
51	1.555'	0.101'
54	1.427'	0.159'

STRESSING SEQUENCE	TENDON NO.	TYPE	JACKING FORCE (K)	TOTAL ELONGATION	LENGTH
1st	52	19K6	842	1.604*	232.59
2nd	53	19K6	856	1.631*	237.86
3rd	51	19K6	856	1.656*	232.24
4th	54	19K6	856	1.586*	238.46
5th	55	12K6	536	0.338*	46.66

NOTES

- Tendons to be stressed from Jacking End as indicated by ⟶ in Tendon Profile Elevation.
- Elongations and Lengths given from Anchor Plate to Anchor Plate.
- Elongations based on a steel modulus of elasticity of 26,500 x 10^6 p.s.i.
- Dimensions are horizontal.

LEGEND

- Dead End
- Jacking End
- Post Tensioning Coupler

APPROVED FOR CONSTRUCTION

W. B. Ashby 7-30-81

W. B. ASHBY
Assistant Director of Highway Design

Figg and Muller Engineers Inc.
434 North Calhoun Street
Tallahassee, Florida 32301

POST TENSIONING LAYOUT - UNIT I

INDIANA STATE HIGHWAY COMMISSION

LAKE COUNTY - RAMP:- C SECTION:-

SCALE:- AS NOTED DATE:- MAY 26, 1981

SUBMITTED FOR APPROVAL Eugene C. Figg Jr.

DRAWING:- OF SHEET:- 329 OF

PROJECT:- MM 220-1 (8)

CONTRACT NO. B-12752

BRIDGE FILE:- 912-45-2546 REN

EUGENE C. FIGG, JR. REGISTERED TO 18543 STATE OF FLORIDA PROFESSIONAL ENGINEER

DESIGNED MM/DD C'K'D MM
DRAWN RT C'K'D MM
TRACED Hgs C'K'D MM