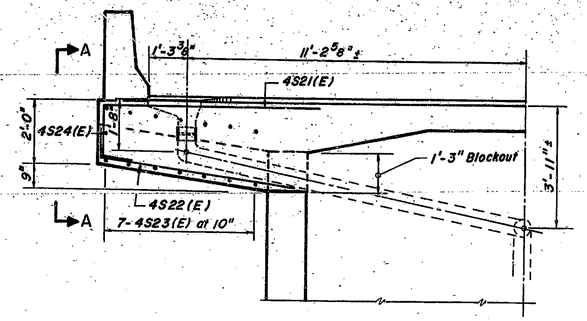

CROSS SECTION AT ROADWAY DRAIN

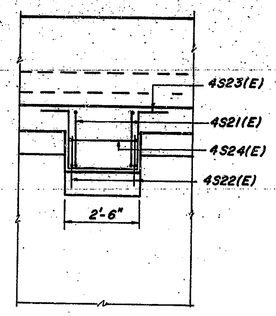

VIEW A-A

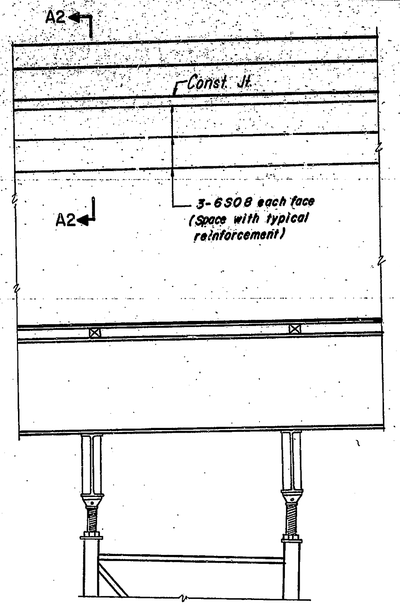

ELEVATION
(AT CONSTRUCTION TOWER)

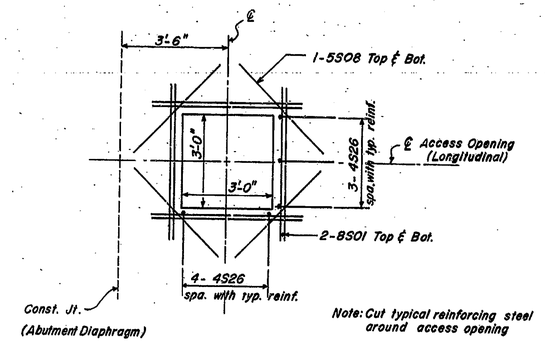

PLAN

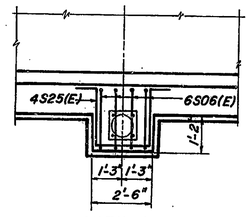

VIEW BI-BI

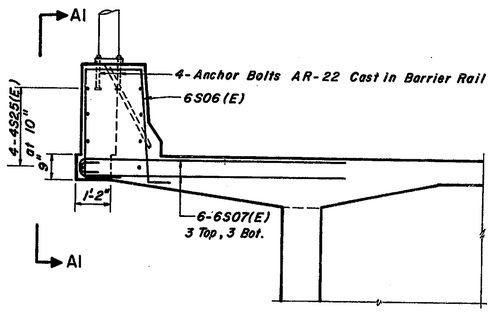

CROSS SECTION AT LIGHTSTAND
(Sta. 30+30.00)

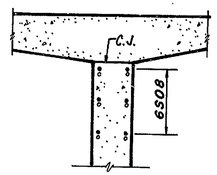

SECTION A2-A2

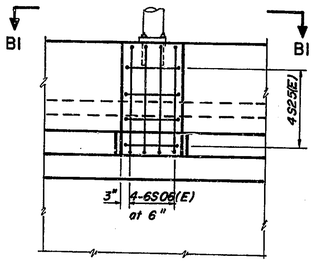

VIEW AI-AI

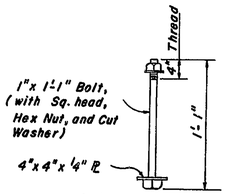

(Galvanize Thread, Hex Nut and Cut Washer)

ANCHOR BOLT AR-22

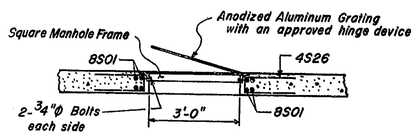

SECTION THRU ACCESS OPENING

ACCESS OPENING DETAILS

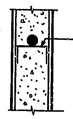

Note: Quantities billed with
Unit Bill of Material.

TENDON SUPPORT DETAILS

APPROVED FOR CONSTRUCTION

W. B. ABBOTT
Assistant Engineer of Bridge Design
7-30-81

DESIGNED MM	C'K'D. MM		
DRAWN T.F	C'K'D. GR		
TRACED HLB	C'K'D. GR		

Flagg and Muller Engineers Inc.
426 North Calhoun Street
Tallahassee Florida 32301

MISCELLANEOUS SUPERSTRUCTURE DETAILS

INDIANA STATE HIGHWAY COMMISSION

LAKE COUNTY- RAMP:- C SECTION:-
SCALE:- DATE:- MAY 26, 1981
SUBMITTED FOR APPROVAL Eugene C. Figg, Jr.
DRAWING:- OF SHEET:- 324 OF
PROJECT:- MM 220-1(8)
CONTRACT NO. B-12752
BRIDGE FILE:- 912-45-2546 REN

EUGENE C. FIGG JR. REGISTERED No 18543 STATE OF INDIANA PROFESSIONAL ENGINEER