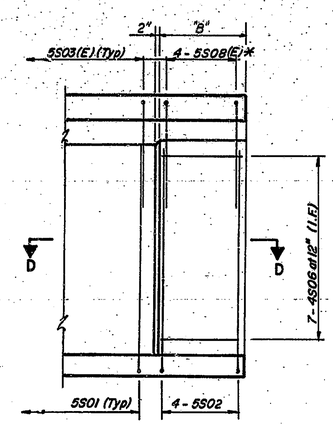

SECTION B-B

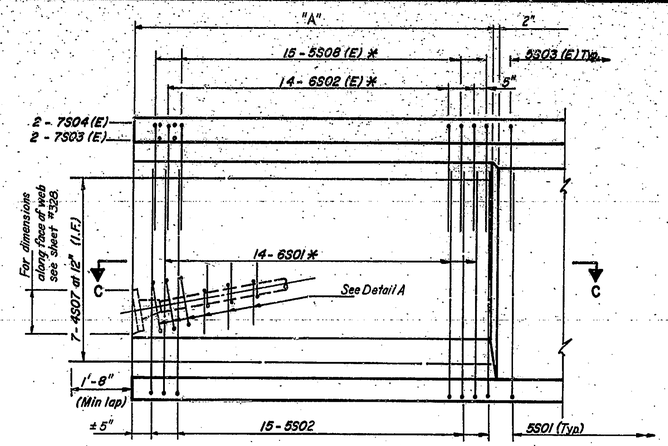

SECTION A-A

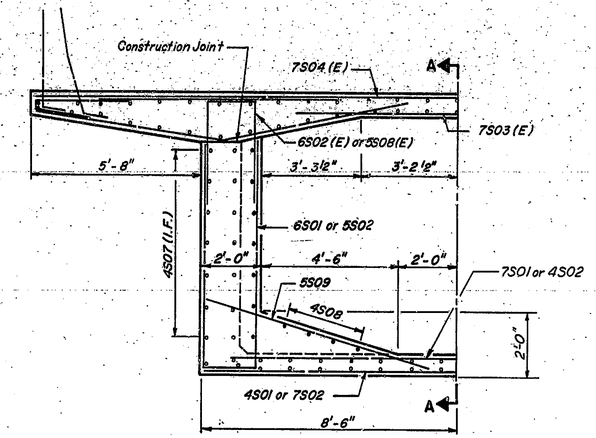

HALF CROSS SECTION
JACKING END

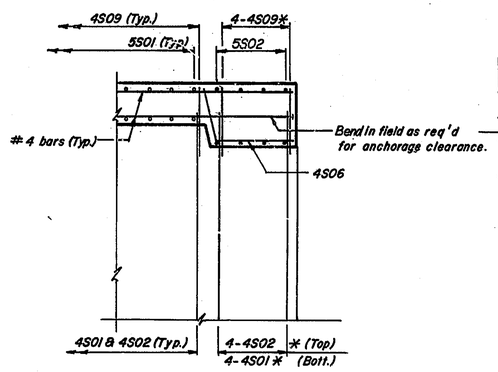

SECTION D-D

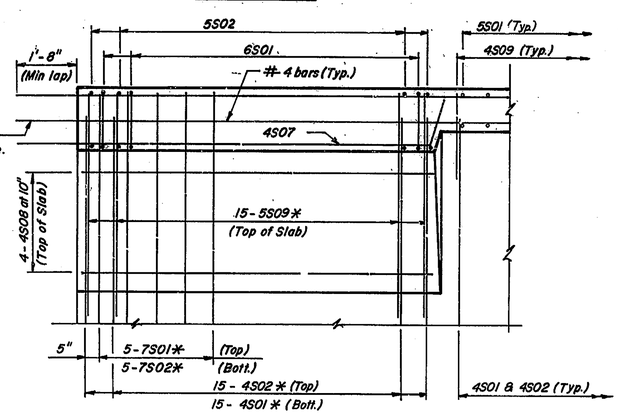

SECTION C-C

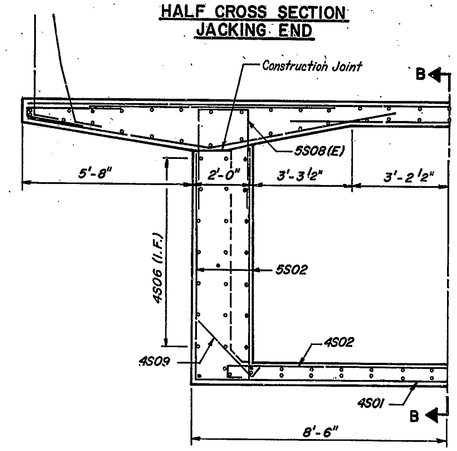

HALF CROSS SECTION
COUPLER END

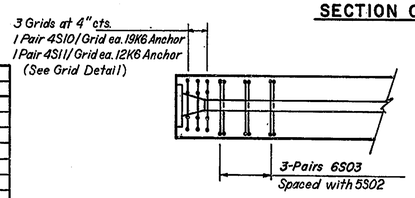

DETAIL A - PLAN VIEW

UNIT	Dimension "A"		Dimension "B"	
	Left Web	Right Web	Left Web	Right Web
I	12'-0"	12'-0"	N.A.	N.A.
II	12'-0"	12'-0"	N.A.	N.A.
III	12'-0"	12'-0"	2'-10"	2'-10"
IV	12'-0"	11'-9"	2'-10"	2'-10"
V	N.A.	N.A.	2'-10"	2'-10"
VI	11'-0"	12'-0"	2'-10"	2'-10"
VII	11'-0"	12'-0"	2'-10"	3'-0"
VIII	11'-0"	12'-0"	2'-10"	3'-0"

Note: Left Hand and Right Hand When Looking Upstation.

(*) Bar Spacing Shown on Corresponding Superstructure Unit Drawings. Sheets # 302 - Unit I
305 - Unit II
308 - Unit III
310 - Unit IV
312 - Unit V
315 - Unit VI
317 - Unit VII
319 - Unit VIII

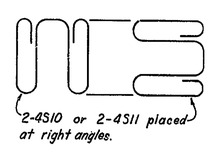

GRID DETAIL

APPROVED FOR CONSTRUCTION

W. B. ABBOTT 7-30-81
Assistant Engineer of Bridge Design

Figg and Muller Engineers Inc.
424 North Calhoun Street
Tallahassee Florida 32301

CONSTRUCTION JOINT REINFORCEMENT DETAILS

INDIANA STATE HIGHWAY COMMISSION

LAKE COUNTY - RAMP:- C SECTION:-
SCALE:- DATE:- May 26, 1981
SUBMITTED FOR APPROVAL Eugene C. Figg Jr.
DRAWING:- OF SHEET:- 322 OF
PROJECT:- M.M. 220-1(8)
CONTRACT NO. B-2752
BRIDGE FILE:- 912-45-2546 REN

EUGENE C. FIGG, JR. REGISTERED No 18543 STATE OF INDIANA PROFESSIONAL ENGINEER

DESIGNED M.M. C'K'D M.M.
DRAWN R.E.T. C'K'D R.E.T.
TRACED T.D.S. C'K'D G.R.