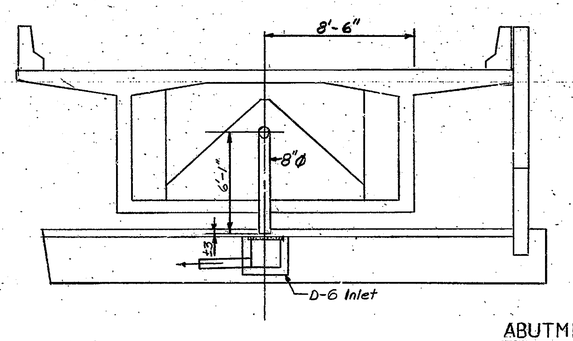

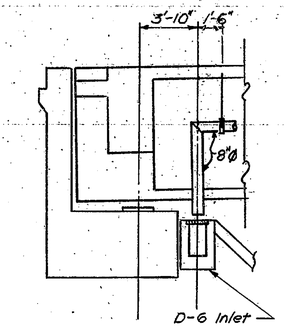

ABUTMENT DETAIL 301

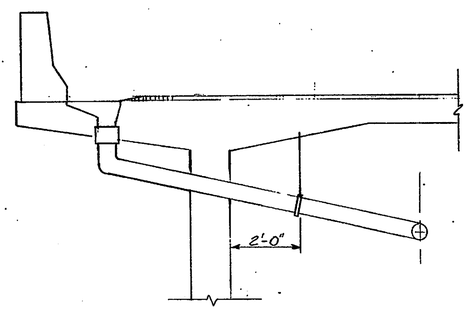

TYPICAL SECTION AT RDWY. DRAIN

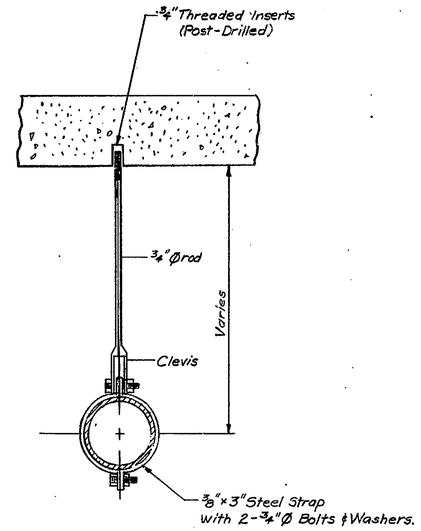

Note: Hangers to be spaced at 10'-0" max.

PIPE HANGER DETAIL (TYP)

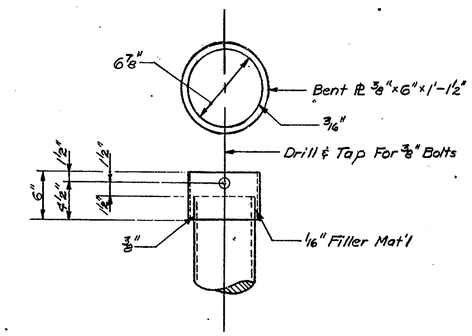

COLLAR DETAIL (TYP)

APPROVED FOR CONSTRUCTION

W. B. Abbott
W. B. ABBOTT
Assistant Engineer of Bridge Design (1-2-81)

Figg and Muller Engineers Inc.
424 North Capitol Street
Indianapolis, Indiana 46204

SUPERSTRUCTURE DRAINAGE DETAIL

INDIANA STATE HIGHWAY COMMISSION

LAKE COUNTY - RAMP:- B SECTION:-

SCALE:- N.T.S DATE:- July 29, 1981

SUBMITTED FOR APPROVAL Eugene C. Figg Jr.

DRAWING:- OF SHEET:- 316 OF

PROJECT:- MM 220-1(8)

CONTRACT NO. B-12752

BRIDGE FILE:- 912-45-2546 RWN

EUGENE C. FIGG, JR. REGISTERED NO. 10543 STATE OF INDIANA PROFESSIONAL ENGINEER

DESIGNED	M.M.	C'K'D.	M.M.
DRAWN	T.D.S.	C'K'D.	G.R.
TRACED		C'K'D.	