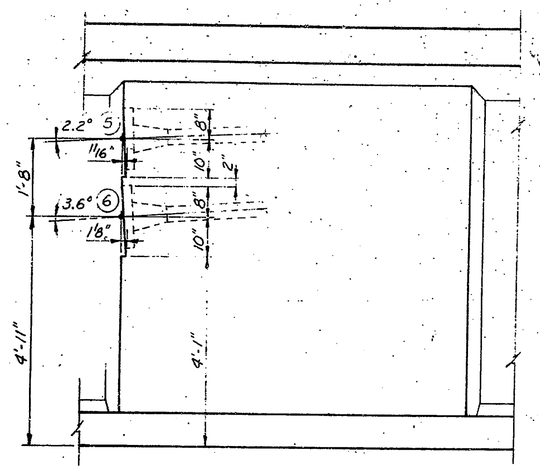

BLISTER B-1

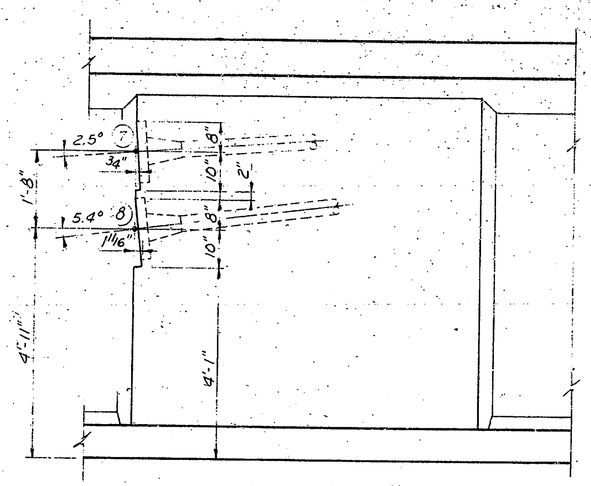

BLISTER B-2

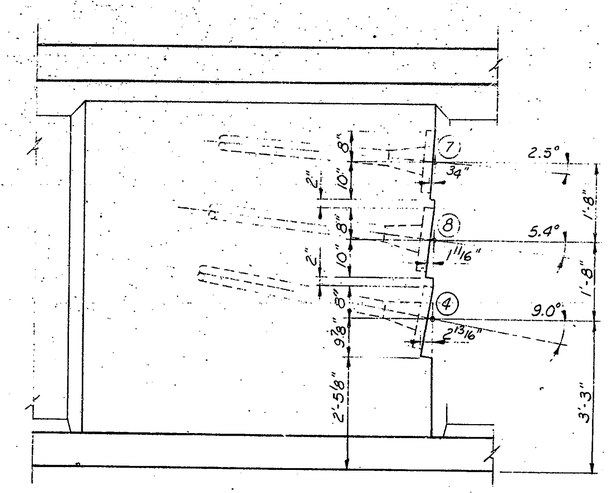

BLISTER B-3

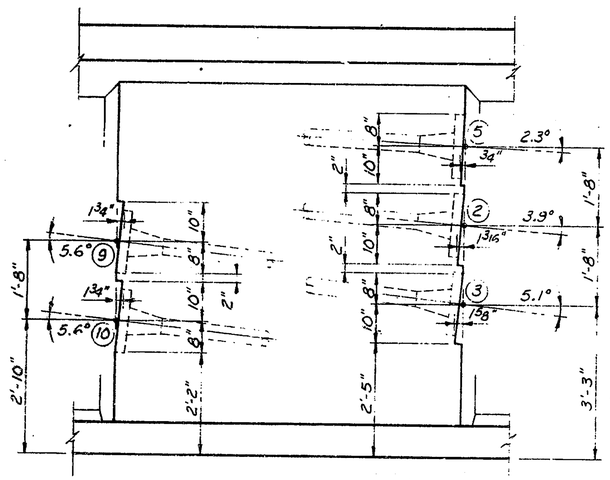

BLISTER B-4

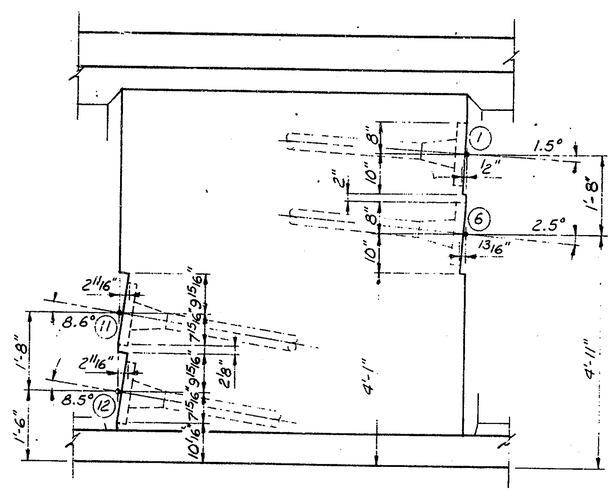

BLISTER B-5

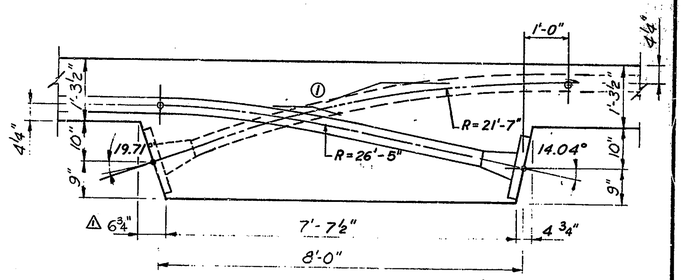

TYPICAL PLAN DEVIATION DETAIL

NOTE: Dimensions are at right angles to face of tendon anchorages.

① Revised 11/9/82

APPROVED FOR CONSTRUCTION

F. L. Derthick
F. L. DERTHICK
Engineer of Bridge Plans MAR 30 1983

△ Revised March, 1983

Figg and Muller Engineers Inc.
424 North Calhoun Street
Tallahassee Florida 32301

POST TENSIONING BLISTER DETAILS

INDIANA STATE HIGHWAY COMMISSION

LAKE COUNTY - RAMP:- B SECTION:-
SCALE:- 3/4" = 1'-0" DATE:- July 29, 1981
SUBMITTED FOR APPROVAL Eugene C. Figg, Jr.
DRAWING:- OF SHEET:- 310 OF
PROJECT:- MM 220-1(8)
CONTRACT NO. B-12752
BRIDGE FILE:- 912-45-2546 RWN

EUGENE C. FIGG, JR. REGISTERED No 18543 STATE OF INDIANA PROFESSIONAL ENGINEER

DESIGNED D.D. CK'D D.D.
DRAWN R.E.T. CK'D D.D.
TRACED CK'D