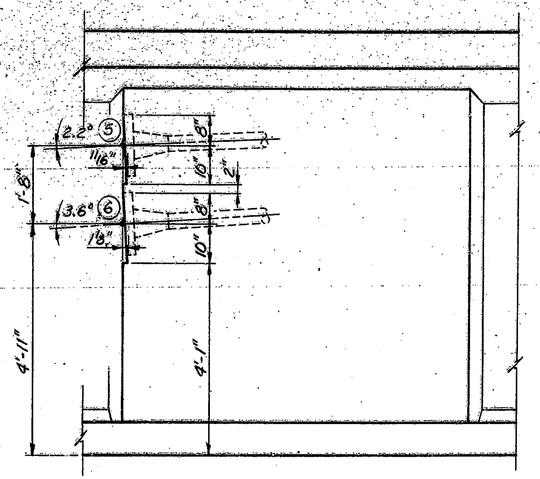

BLISTER B-1

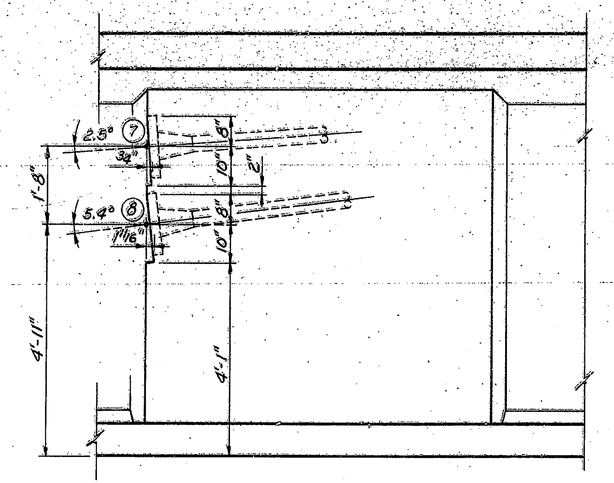

BLISTER B-2

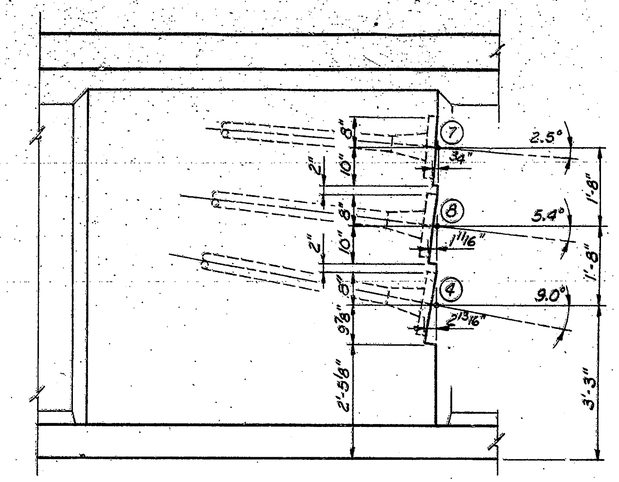

BLISTER B-3

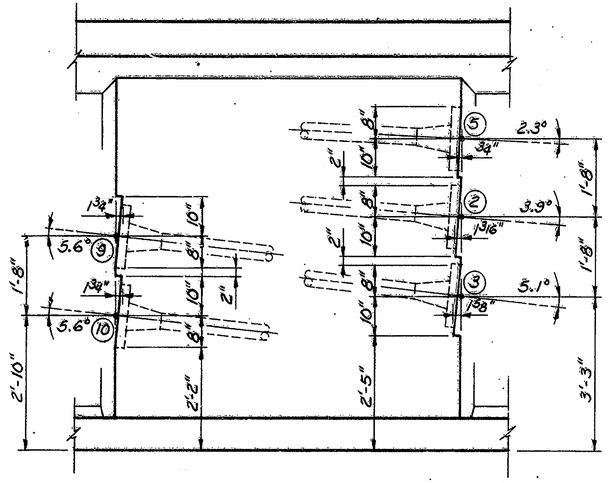

BLISTER B-4

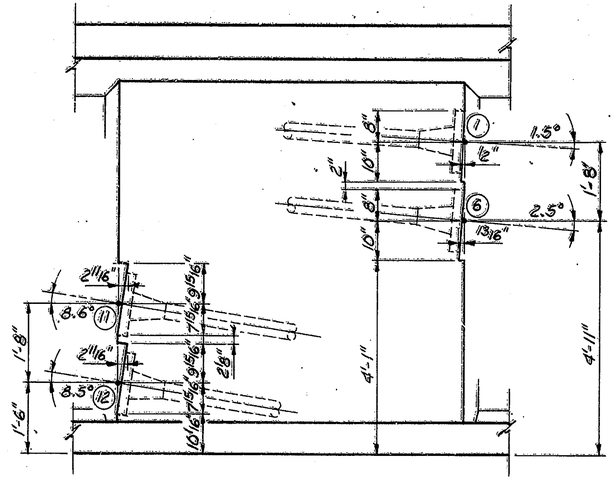

BLISTER B-5

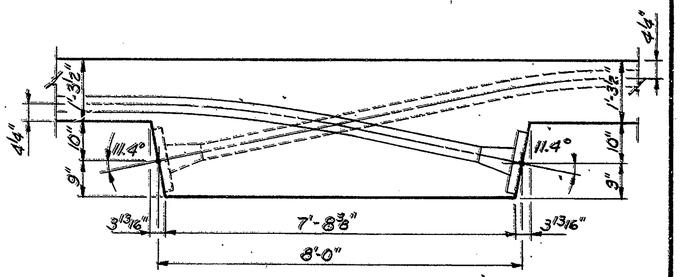

TYPICAL PLAN DEVIATION DETAIL

NOTE: Dimensions are at right angles to face of tendon anchorages.

APPROVED FOR CONSTRUCTION

W. B. Abbott

W. B. ABBOTT
Assistant Engineer of Bridge Design 11-12-81

Figg and Muller Engineers Inc.
456 Berkshire Road
Tallahassee Florida 32301

POST TENSIONING BLISTER DETAILS

INDIANA STATE HIGHWAY COMMISSION

LAKE COUNTY - RAMP:- B SECTION:-

SCALE:- 3/4" = 1'-0"

DATE:- July 29, 1981

SUBMITTED FOR APPROVAL Eugene C. Figg, Jr.

DRAWING:- OF SHEET:- 310 OF

PROJECT:- MM 220-1(8)

CONTRACT NO. B-12752

BRIDGE FILE:- 912-45-2546 RWN

DESIGNED	D.D.	CK'D	D.D.
DRAWN	R.E.T.	CK'D	D.D.
TRACED		CK'D	