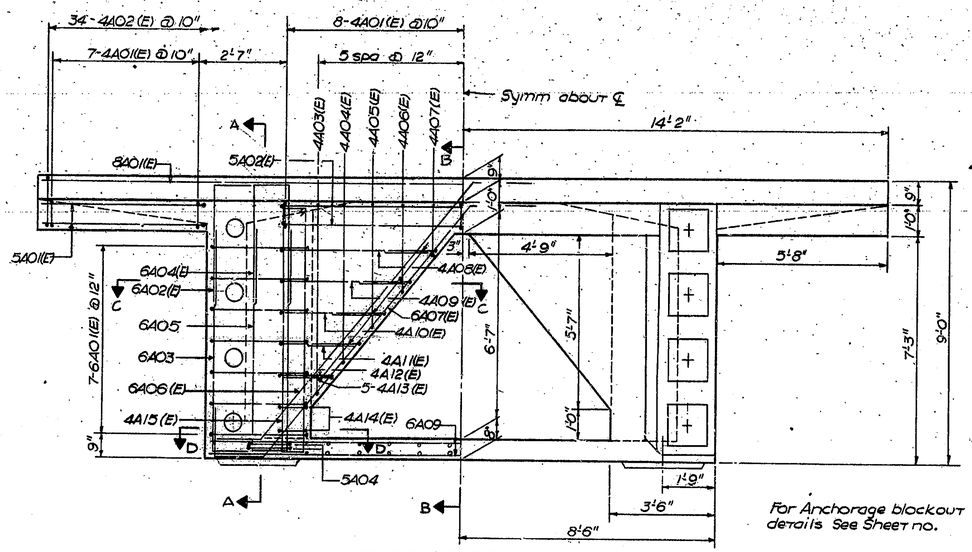

CROSS SECTION

For Anchorage blockout details See Sheet no.

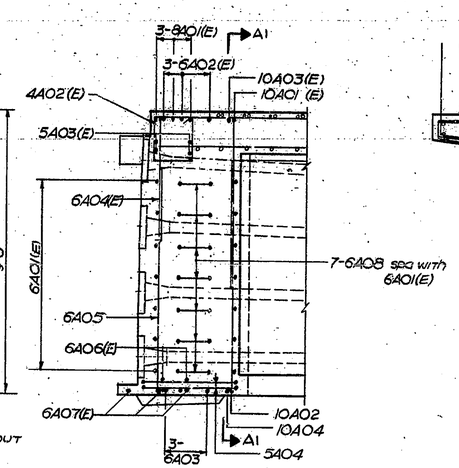

SECTION A-A

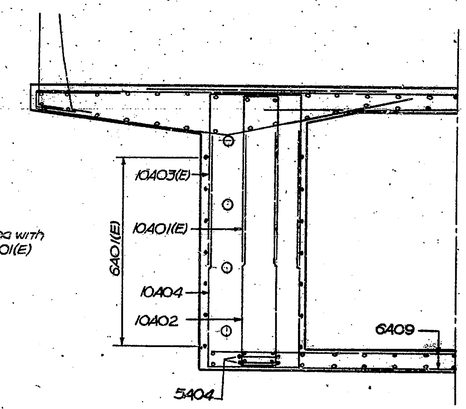

SECTION A1-A1

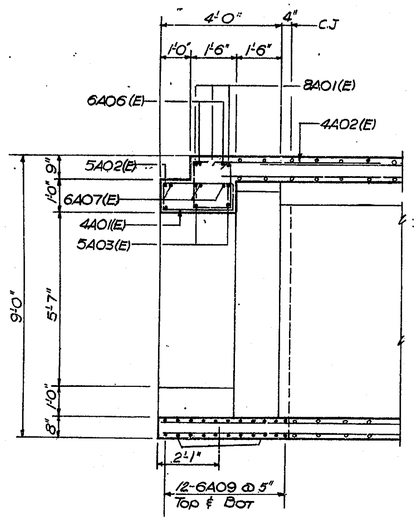

SECTION B-B

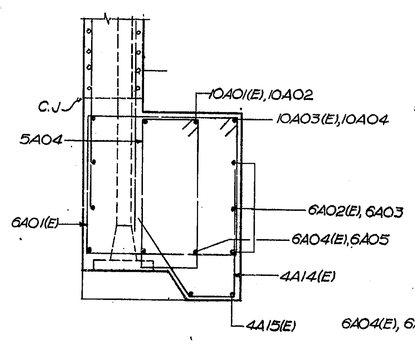

SECTION D-D

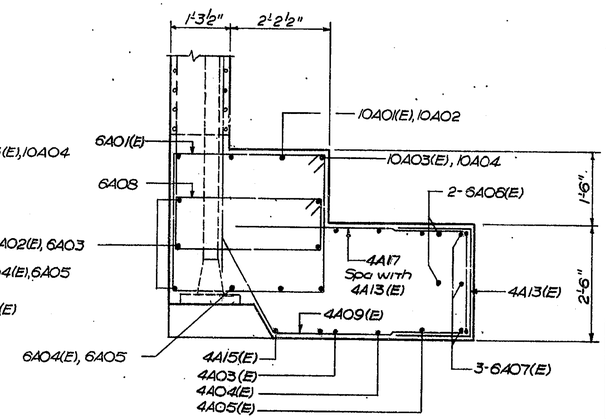

SECTION C-C

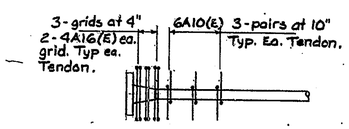

ADDITIONAL TENDON REINFORCEMENT

APPROVED FOR CONSTRUCTION

W. B. ABBOTT
Assistant Engineer of Bridge Design
11-2-81

DESIGNED M.M.	CK'D. M.M.		
DRAWN T.F.	CK'D. M.M.		
TRACED	CK'D.		

Flood and Mulfer Engineers Inc.
424 North Calhoun Street
Tallahassee Florida 32301

ABUTMENT DIAPHRAGM RAMP B

INDIANA STATE HIGHWAY COMMISSION

LAKE COUNTY - RAMP:- B SECTION:-

SCALE:- ½" = 1'-0" DATE:- July 23, 1981

SUBMITTED FOR APPROVAL

DRAWING:- OF SHEET:- 307 OF

PROJECT:- MM 220-1(8)

CONTRACT NO. B-12752

BRIDGE FILE:- 912-40-2546 RWD