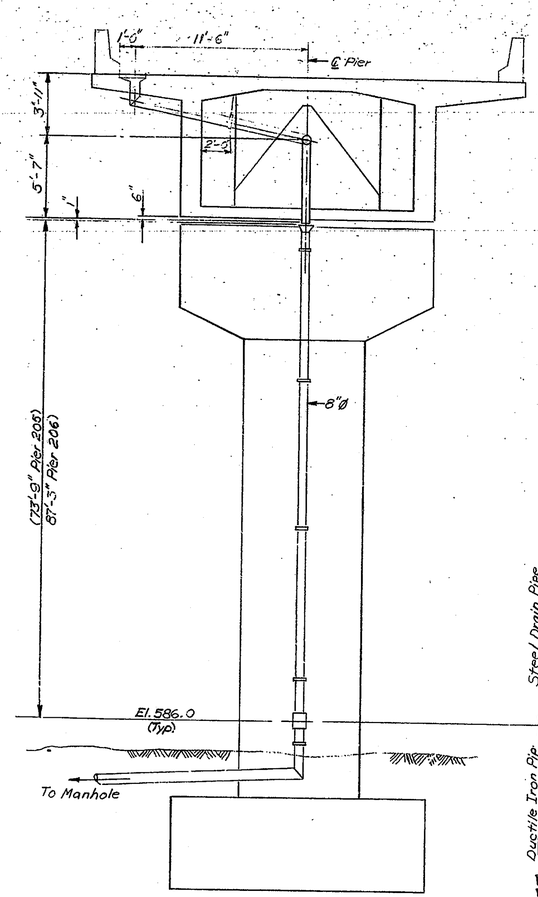

ELEVATION
PIERS 205 & 206

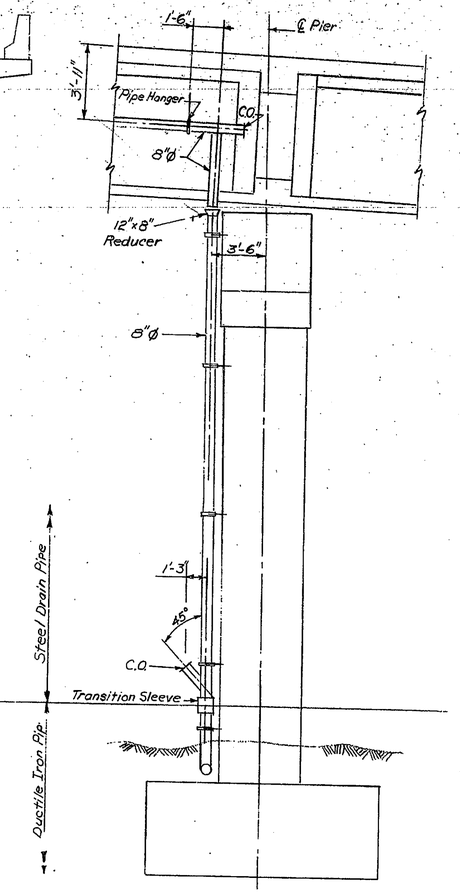

DETAIL AT PIERS 205 & 206 TYPICAL

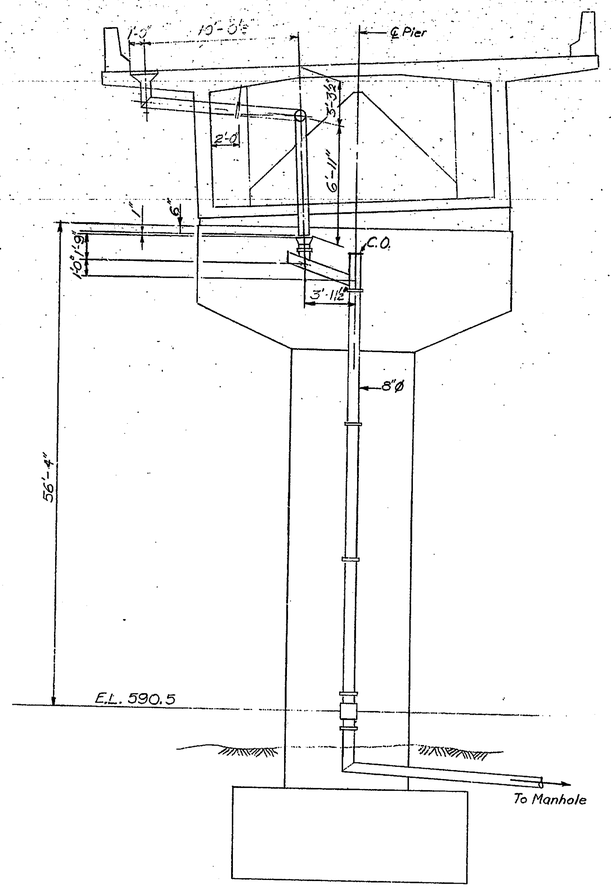

ELEVATION PIER 204

APPROVED FOR CONSTRUCTION

W. B. ABBOTT
Assistant Engineer of Bridge Design 9-17-81

Figg and Muller Engineers Inc.
724 North Calhoun Street
Tallahassee, Florida 32301

SUPERSTRUCTURE DRAINAGE DETAIL II

INDIANA STATE HIGHWAY COMMISSION

LAKE COUNTY - RAMP:- A SECTION:-
SCALE:- N.T.S. DATE:- June 29, 1981
SUBMITTED FOR APPROVAL Eugene C. Figg, Jr.
DRAWING:- OF SHEET:- 152 OF
PROJECT:- MM 220-1 (8)
CONTRACT NO. B-12752
BRIDGE FILE:- 912-45-2546 RWX

EUGENE C. FIGG, JR. REGISTERED PE 11540 STATE OF Florida PROFESSIONAL ENGINEER

DES'D M.M.	C'K'D M.M.
DRA T.S.	C'K'D T.F.
TRA T.S.	C'K'D T.F.