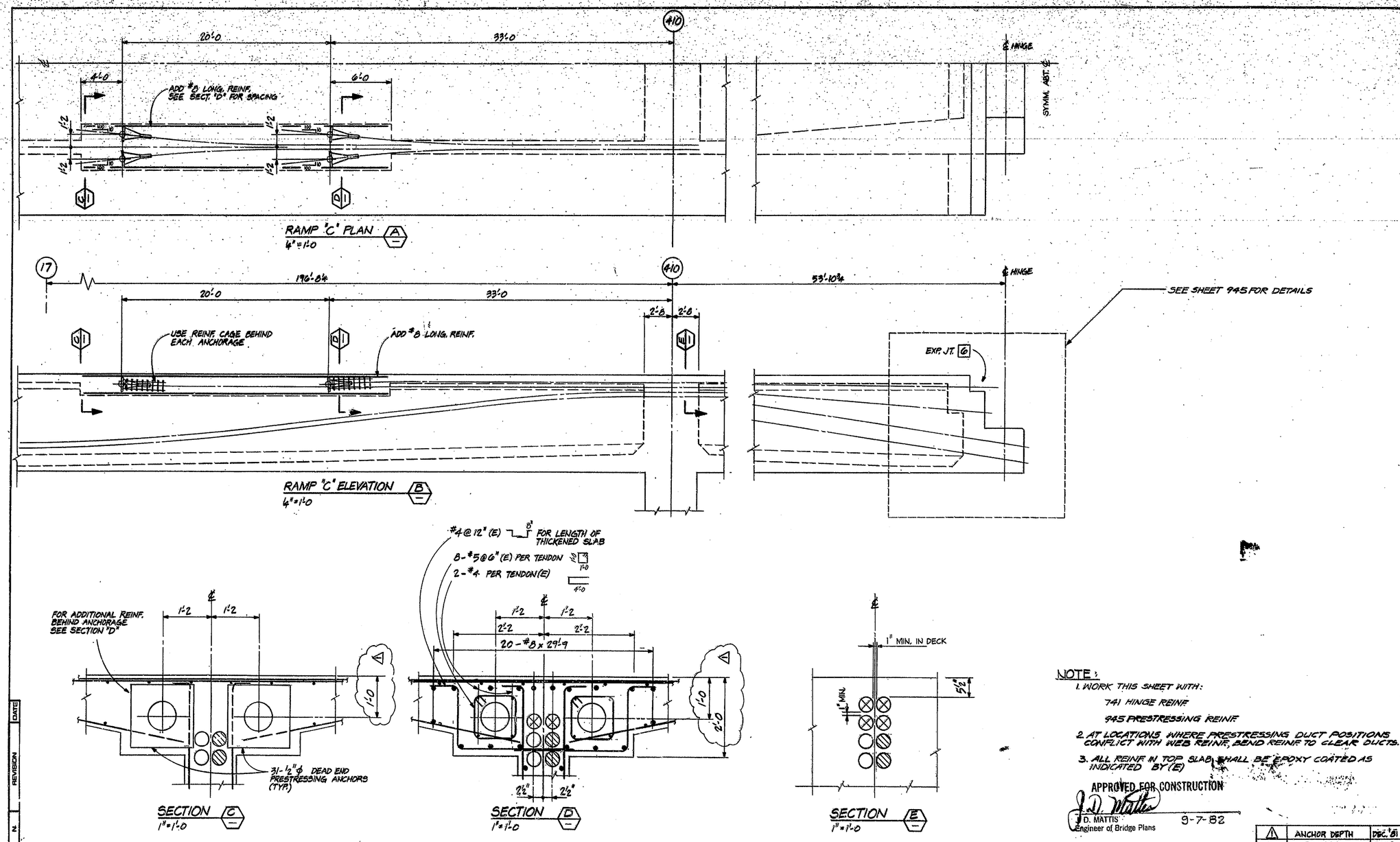

NOTE:

1. WORK THIS SHEET WITH:
   741 HINGE REINF.
   945 PRESTRESSING REINF.
2. AT LOCATIONS WHERE PRESTRESSING DUCT POSITIONS CONFLICT WITH WEB REINF., BEND REINF. TO CLEAR DUCTS.
3. ALL REINF. IN TOP SLAB SHALL BE EPOXY COATED AS INDICATED BY (E)

APPROVED FOR CONSTRUCTION

J. D. MATTIS
Engineer of Bridge Plans
9-7-82

NO.	REVISION	DATE
1	ANCHOR DEPTH	DEC. '81

T. Y. LIN INTERNATIONAL
STRUCTURAL ENGINEERS

REID, QUEBE, ALLISON, WILCOX AND ASSOCIATES INC.
CONSULTING ENGINEERS

WALSH CONSTRUCTION COMPANY
A DIVISION OF GUY F. ATKINSON CO.
DARIEN, CONNECTICUT

SHEET TITLE
RAMP "C" - TOP SLAB ANCHORAGE DETAILS

CLINE AVENUE EXTENSION OVER INDIANA HARBOR CANAL
BRIDGE FILE: 812-45-2548 CONTRACT NO. S-11612 INDIANA STATE HIGHWAY COMMISSION

SHEET N.
944