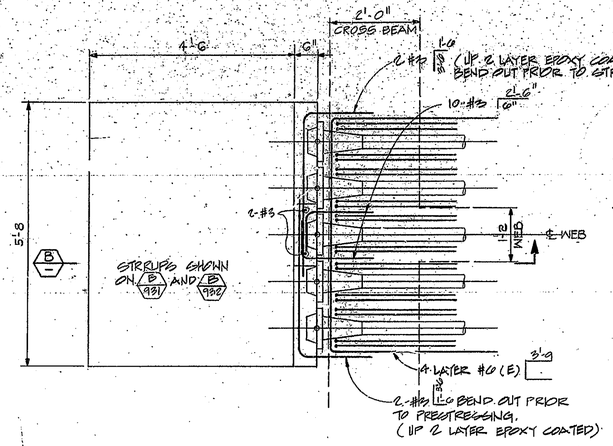


TOP PLAN
3/4" = 1'-0

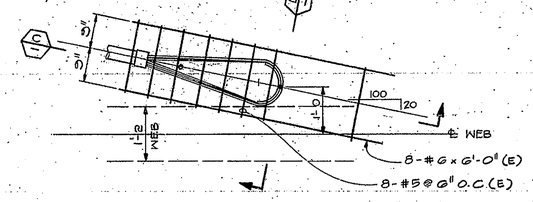


TOP PLAN
3/4" = 1'-0

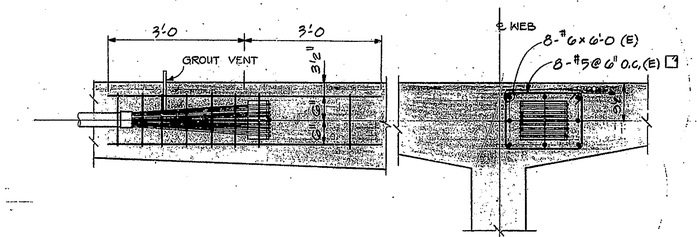


SECTION C
3/4" = 1'-0

SECTION D
3/4" = 1'-0

TYP. LOOPED ANCHOR REINF. DETAIL

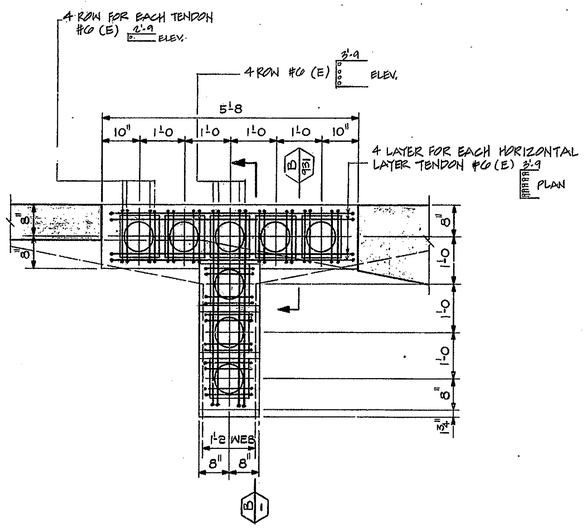


SECTION A
3/4" = 1'-0

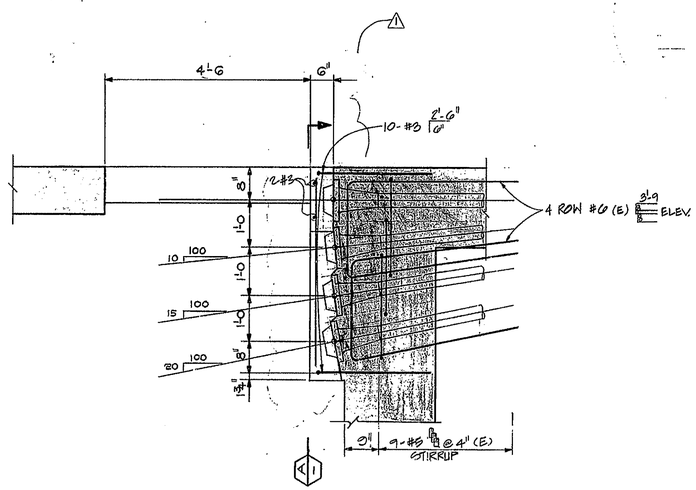


SECTION B
3/4" = 1'-0

NOTES :

1. THE SPIRAL NEAR THE TRUMPET ARE NOT SHOWN ON THE DWG.
2. REQUIRE SUBMITTAL AND APPROVAL OF REINFORCING DETAIL BEFORE COMMENCING WORK.

BLOCKOUT DETAILS

FOR LOCATION SEE SHEET 832

APPROVED FOR CONSTRUCTION

W. B. ABBOTT
Assistant Engineer of Bridge Design 10-28-81

| NO. | REVISION | DATE |
|---|---|---|
| 1 | LOOPED ANCHOR | SEPT '81 |

T. Y. LIN INTERNATIONAL
STRUCTURAL ENGINEERS

REID, QUEBE, ALLISON, WILCOX AND ASSOCIATES INC.
CONSULTING ENGINEERS

**WALSH CONSTRUCTION COMPANY**
A DIVISION OF GUY F. ATKINSON CO.
DARIEN, CONNECTICUT

SHEET TITLE
**PRESTRESSING DETAILS - TOP ANCHORAGE DETAILS 2, SEG. 3**

CLINE AVENUE EXTENSION OVER INDIANA HARBOR CANAL
BRIDGE FILE: 912-45-2646 CONTRACT NO. 8-11612 INDIANA STATE HIGHWAY COMMISSION

SHEET N.
932