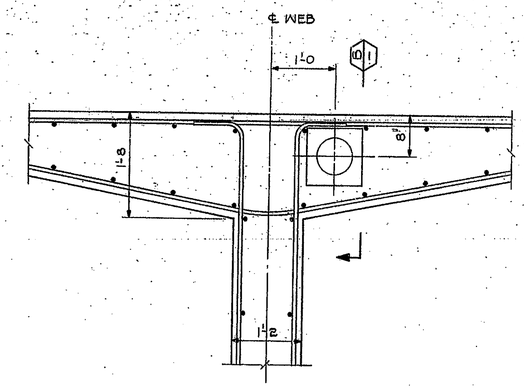

TYPICAL 1 ANCHORAGE DETAIL
1" = 1'-0

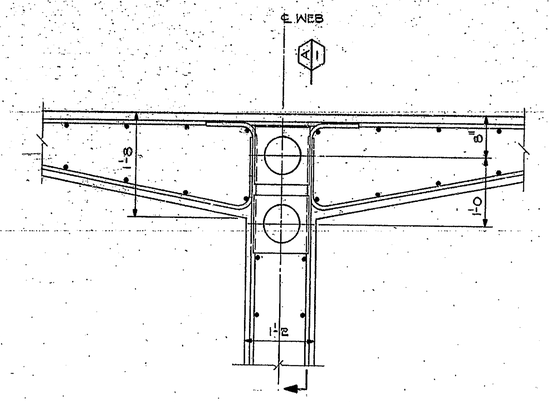

TYPICAL 2 ANCHORAGES DETAIL
1" = 1'-0

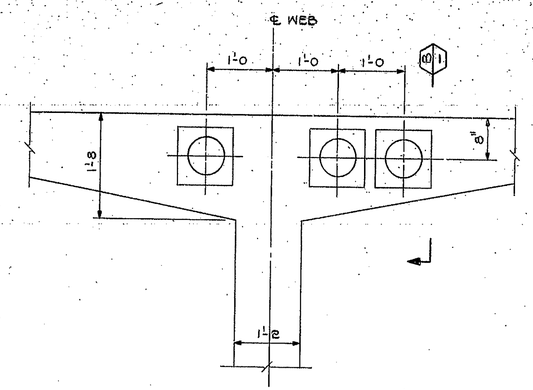

TYPICAL 3 ANCHORAGES DETAIL
1" = 1'-0
CROSS SECTION REINFORCEMENT SIMILAR TO 4 ANCHORAGE DETAIL

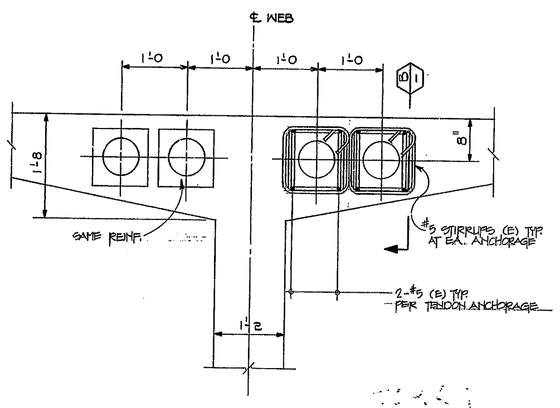

TYPICAL 4 ANCHORAGES DETAIL
1" = 1'-0

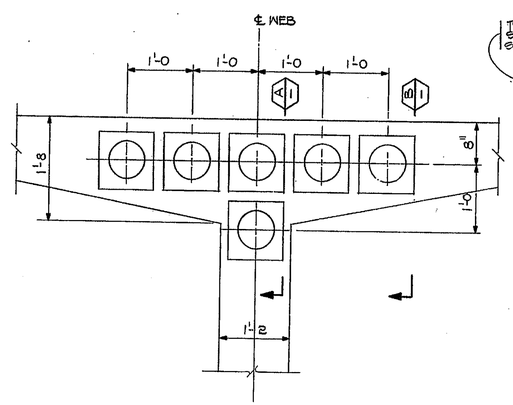

TYPICAL 6 ANCHORAGES DETAIL
1" = 1'-0
CROSS SECTION REINFORCEMENTS SAME AS 4 ANCHORAGES DETAIL.

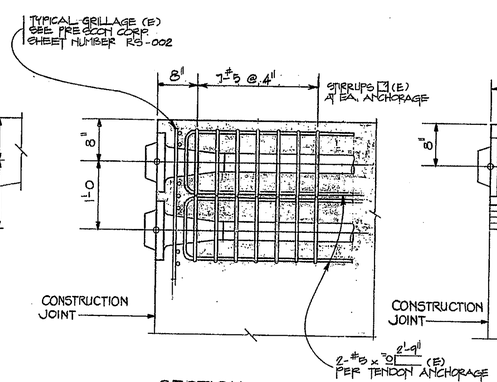

SECTION A
1" = 1'-0

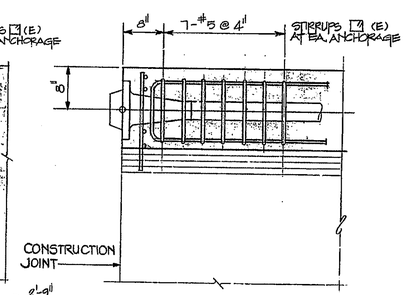

SECTION B
1" = 1'-0

NOTES:

1. REQUIRE SUBMITTAL AND APPROVAL OF REINFORCING DETAILS BEFORE COMMENCING WORK.
2. ALL REINF. IN DECK MARKED WITH NOTATION (E) SHALL BE EPOXY COATED

W. B. Wall 6-15-81

T. Y. LIN INTERNATIONAL
STRUCTURAL ENGINEERS

REID, QUEBE, ALLISON, WILCOX AND ASSOCIATES INC.
CONSULTING ENGINEERS

WALSH CONSTRUCTION COMPANY
A DIVISION OF GUY F. ATKINSON CO.
DARIEN, CONNECTICUT

SHEET TITLE
PRESTRESSING DETAILS- TOP ANCHORAGE DETAILS 1 – SEGMENT 3

CLINE AVENUE EXTENSION OVER INDIANA HARBOR CANAL
BRIDGE FILE: 912-45-2548 CONTRACT NO. 8-11612
INDIANA STATE HIGHWAY COMMISSION

FIELD REVISION 1 JAN. 28, 1981

SHEET N.
931