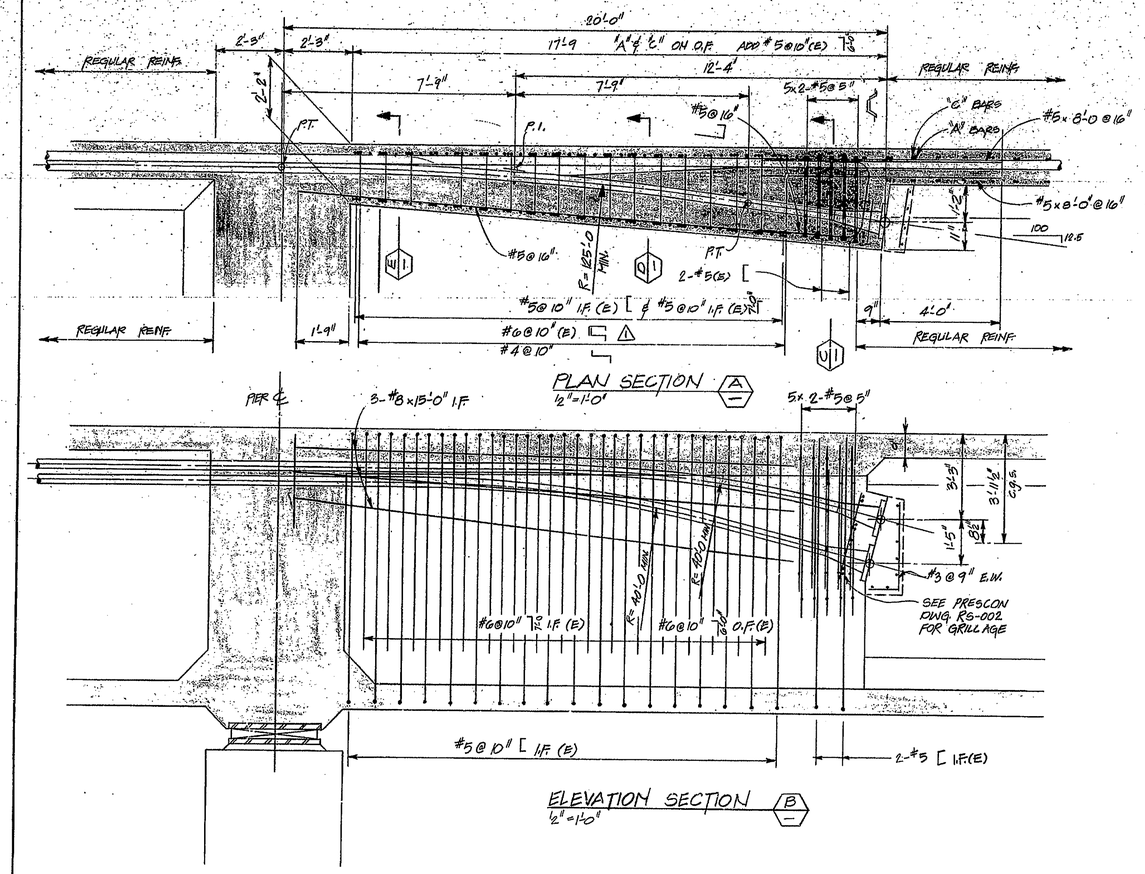

PLAN SECTION (A)
1/2"=1'-0"

ELEVATION SECTION (B)
1/2"=1'-0"

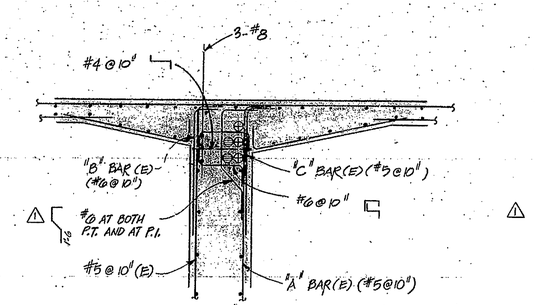

SECTION (E)
1/2"=1'-0"

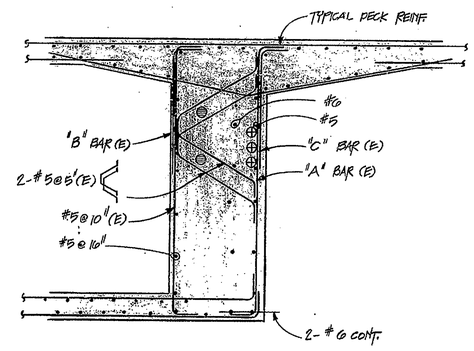

SECTION (C)
1/2"=1'-0"

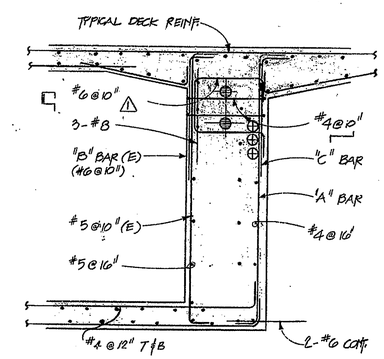

SECTION (D)
1/2"=1'-0"

NOTES:

1. RE 5. IN TOP DECK SLAB IS EPOXY COATED AS INDICATED BY (E)
2. THIS BUILD-OUT IS FOR TWO TENDONS, 21 - ½"ϕ STRAND EACH LOCATED NEAR PIER 3.
3. NO DUCT COUPLERS TO BE USED FOR ANCHORED TENDONS BETWEEN PIER AND ANCHORAGE

APPROVED FOR CONSTRUCTION
W. B. Abbott 6-23-81
ABBOTT
Assistant Engineer of Bridge Design

NO.	REVISION	DATE
1	PT & PI BAR	JUNE 1981
0	ISSUED	MAY 1981

T. Y. LIN INTERNATIONAL
STRUCTURAL ENGINEERS

REID, QUEBE, ALLISON, WILCOX AND ASSOCIATES INC.
CONSULTING ENGINEERS

T. Y. LIN REGISTERED No. 18266 STATE OF INDIANA PROFESSIONAL ENGINEER

WALSH CONSTRUCTION COMPANY
A DIVISION OF GUY F. ATKINSON CO.
DARIEN, CONNECTICUT

SHEET TITLE
BLISTER - 2 x 21 1/2" STRANDS NEAR PIER 3

CLINE AVENUE EXTENSION OVER INDIANA HARBOR CANAL
BRIDGE FILE: 912-45-2548 CONTRACT NO. B-11612
INDIANA STATE HIGHWAY COMMISSION

SHEET N.
910