NOTES:
1. WORK THIS SHEET WITH:
944 DEAD END ANCHORS, RAMP "C"
945 PRESTRESSING REINF., EXP. JT. 6
1021 BEARING SETTING

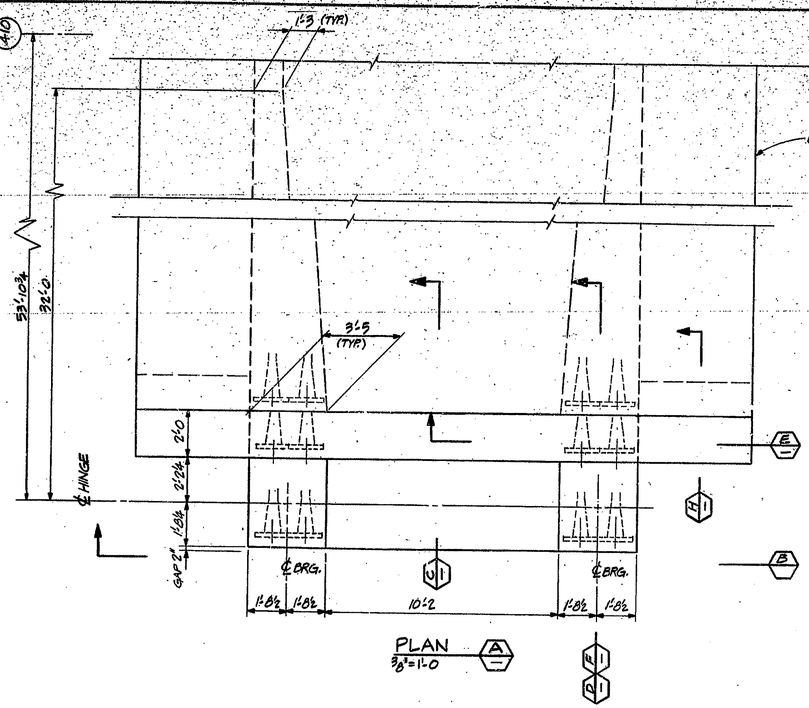


PLAN (A) 3/8"=1'-0

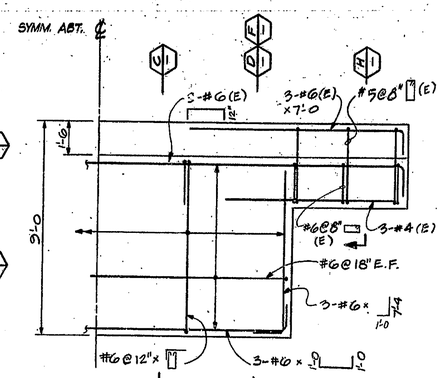


SECTION AT DIAPHRAGM (E) 3/8"=1'-0

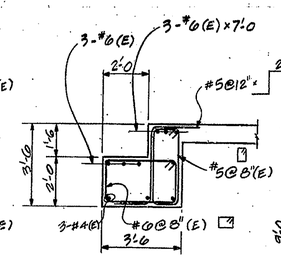


SECTION (H) 3/8"=1'-0

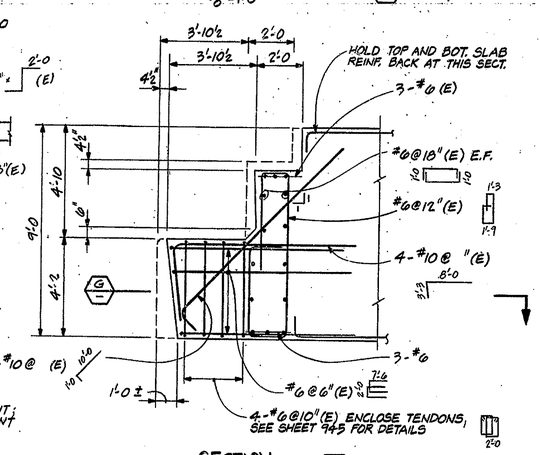


SECTION (F) 3/8"=1'-0

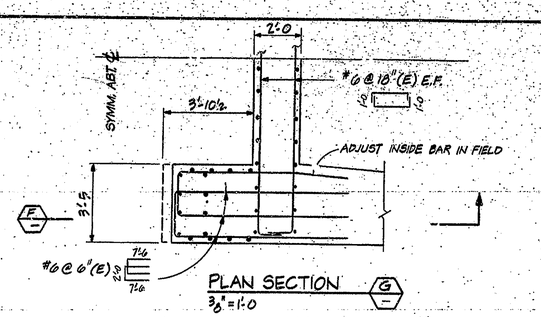


PLAN SECTION (G) 3/8"=1'-0

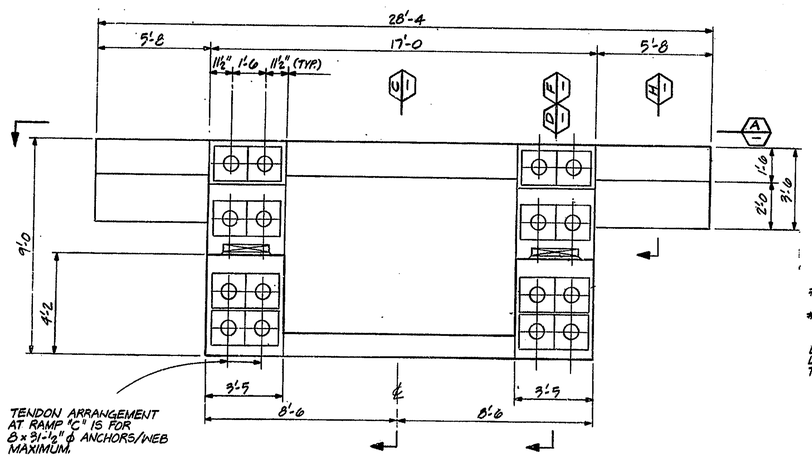


FRONT VIEW (B) 3/8"=1'-0

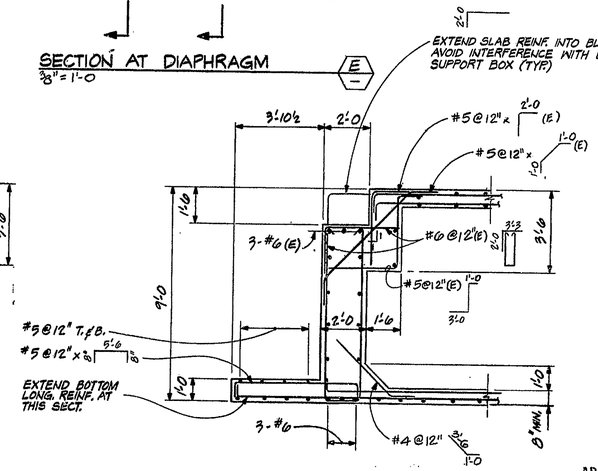


SECTION (C) 3/8"=1'-0

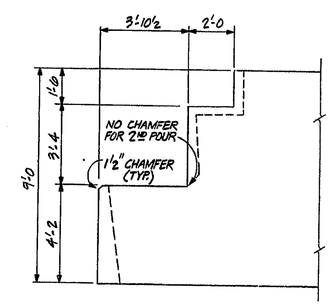


SECTION (D) 2ND POUR (AFTER STRESSING) 3/8"=1'-0

APPROVED FOR CONSTRUCTION
J. D. MATTIS
Engineer of Bridge Plans
9-7-82

| No. | REVISION | DATE |
|---|---|---|
| 1 | RAMP "C" ONLY | DEC. '81 |

T. Y. LIN INTERNATIONAL
STRUCTURAL ENGINEERS

REID, QUIEBE, ALLISON, WILCOX AND ASSOCIATES INC.
CONSULTING ENGINEERS

REGISTERED PROFESSIONAL ENGINEER 18266 STATE OF INDIANA

**WALSH CONSTRUCTION COMPANY**
A DIVISION OF GUY F. ATKINSON CO.
DARIEN, CONNECTICUT

SHEET TITLE
**RAMP "C" EXPANSION JOINT 6**

CLINE AVENUE EXTENSION OVER INDIANA HARBOR CANAL
BRIDGE FILE: 912-45-2546 CONTRACT NO. 8-11612
INDIANA STATE HIGHWAY COMMISSION

SHEET N.
**741**