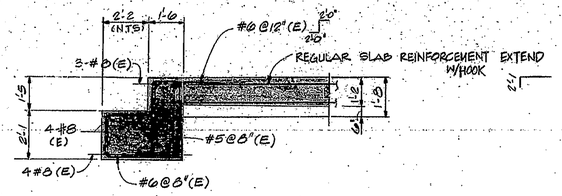

SECTION C
3/8" = 1'-0

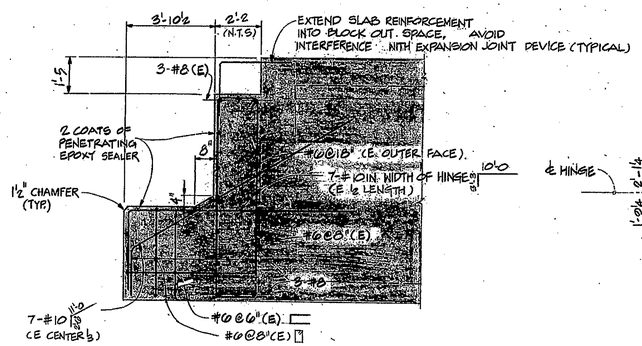

SECTION D
3/8" = 1'-0

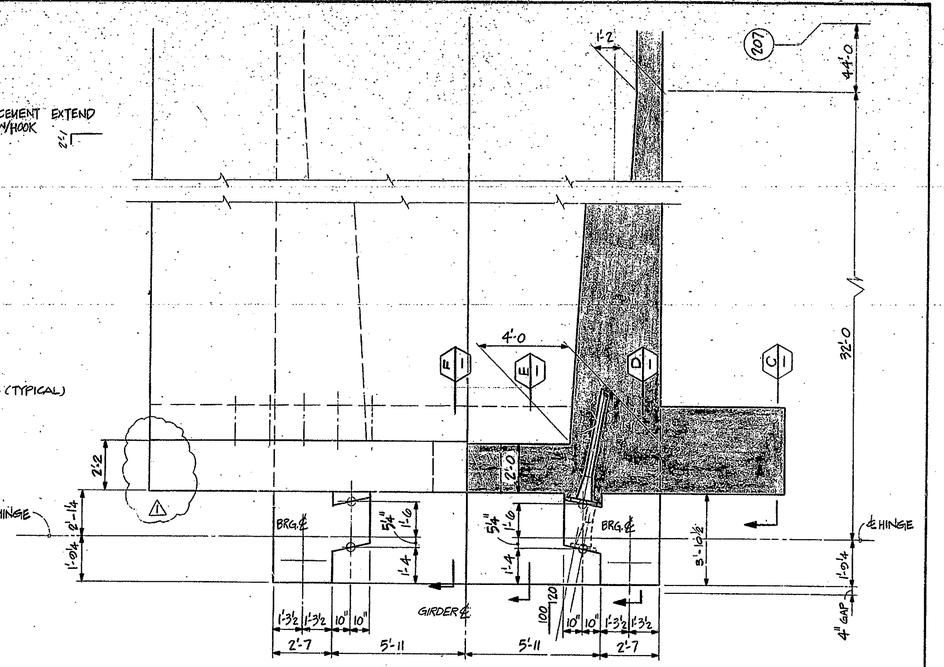

PLAN SECTION A
3/8" = 1'-0

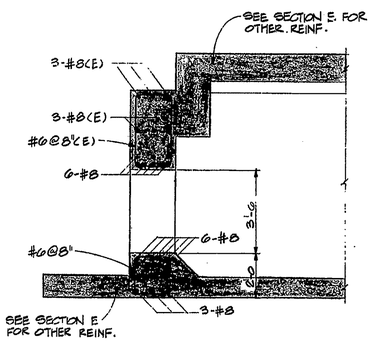

SECTION F
3/8" = 1'-0

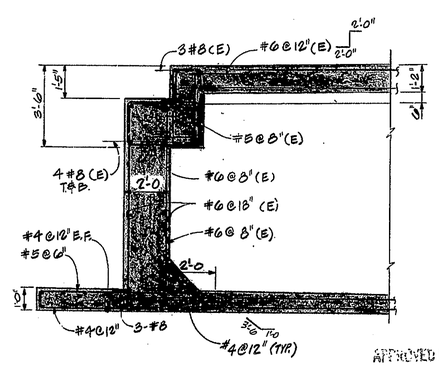

SECTION E
3/8" = 1'-0

APPROVED FOR CONSTRUCTION
W. B. ABBOTT
Assistant Engineer of Bridge Design 10-26-81

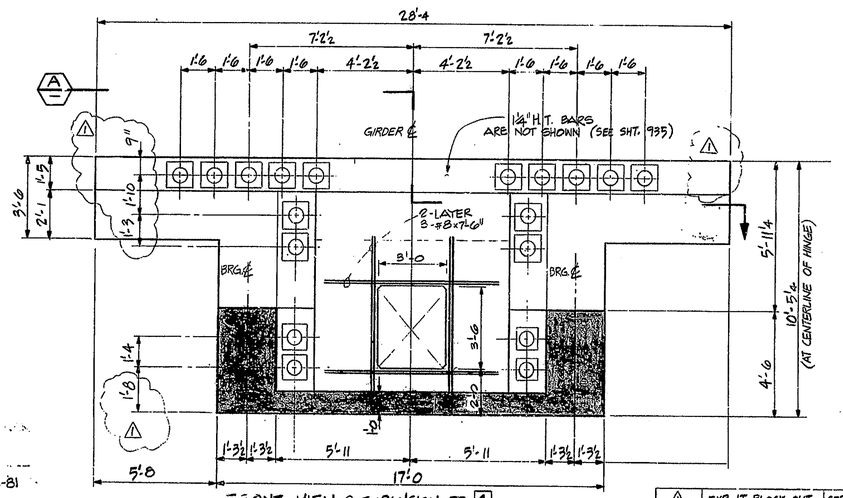

FRONT VIEW @ EXPANSION JT. 4

NOTES:

1. WORK THIS SHEET WITH:
   - 731 FOR REINFORCING
   - 933, 933A, 93B, 939 FOR PRESTRESSING
   - 1104 AND 1104A FOR CONST. SEQUENCE

No.	REVISION	DATE
1	EXP. JT. BLOCK-OUT	SEPT. '01

T. Y. LIN INTERNATIONAL
STRUCTURAL ENGINEERS

REID, QUEBE, ALLISON, WILCOX AND ASSOCIATES INC.
CONSULTING ENGINEERS

T. Y. LIN REGISTERED PROFESSIONAL ENGINEER STATE OF INDIANA

WALSH CONSTRUCTION COMPANY
A DIVISION OF GUY F. ATKINSON CO.
DARIEN, CONNECTICUT

SHEET TITLE
RAMP "A" - EXPANSION JOINT 4 DETAILS

CLINE AVENUE EXTENSION OVER INDIANA HARBOR CANAL
BRIDGE FILE: 812-45-2549 CONTRACT NO. 8-11812
INDIANA STATE HIGHWAY COMMISSION

SHEET N.
732