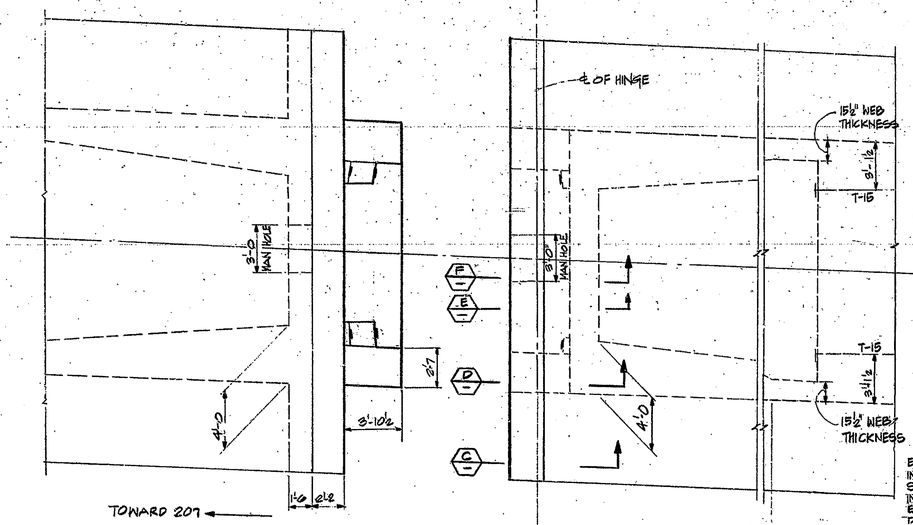

PLAN HINGE 4 (A)
1/4"=1'-0

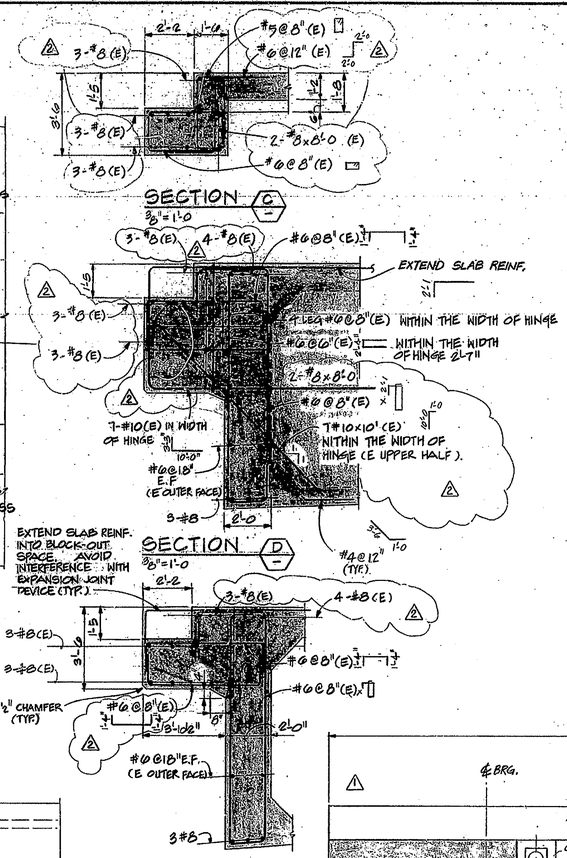

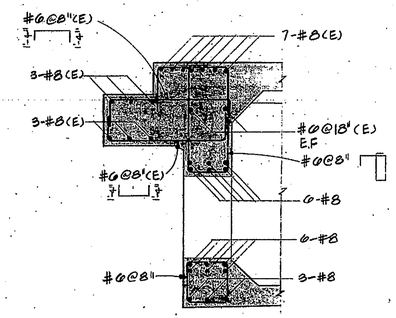

SECTION (F)
3/8"=1'-0

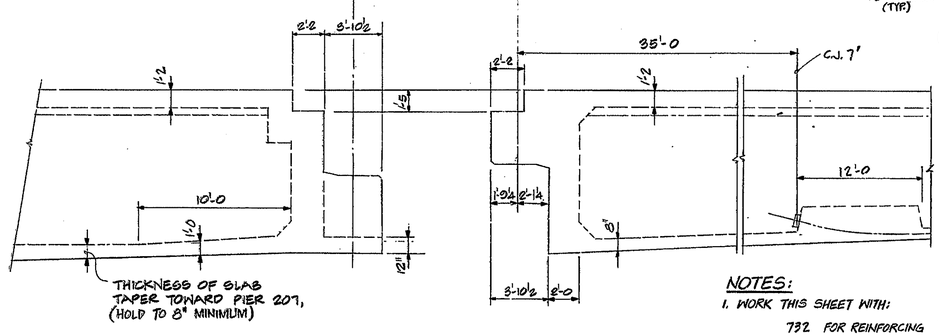

LONGITUDINAL SECTION HINGE 4 (B)
1/4"=1'-0

NOTES:

1. WORK THIS SHEET WITH:

732 FOR REINFORCING

935, 935A, 938, 939 FOR PRESTRESSING

1104 AND 1104A FOR CONST. SEQUENCE

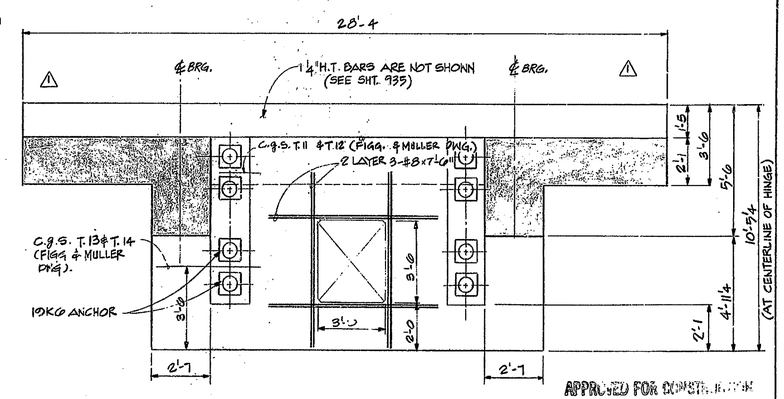

FRONT VIEW @ EXPANSION JT. 4
3/8"=1'-0 (LOOKING TOWARD PIER 206)

APPROVED FOR CONSTRUCTION

W. B. ABBOTT
Assistant Engineer of Bridge 10-26-81

No.	REVISION	DATE
2	SECT. "D", "E", "F"	OCT. '81
1	EXP. JT. BLOCK-OUT	SEPT. '81

DATE	REVISION	N

T. Y. LIN INTERNATIONAL
STRUCTURAL ENGINEERS

REID, QUEBE, ALLISON, WILCOX AND ASSOCIATES INC.
CONSULTING ENGINEERS

T. Y. LIN REGISTERED ARCHITECT INDIANA PROFESSIONAL ENGINEER

WALSH CONSTRUCTION COMPANY
A DIVISION OF GUY F. ATKINSON CO.
DARIEN, CONNECTICUT

SHEET TITLE: RAMP "A" EXPANSION JOINT 4 DETAILS

CLINE AVENUE EXTENSION OVER INDIANA HARBOR CANAL
BRIDGE FILE: 912-45-2548 CONTRACT NO: B-11812 INDIANA STATE HIGHWAY COMMISSION

SHEET N. 731