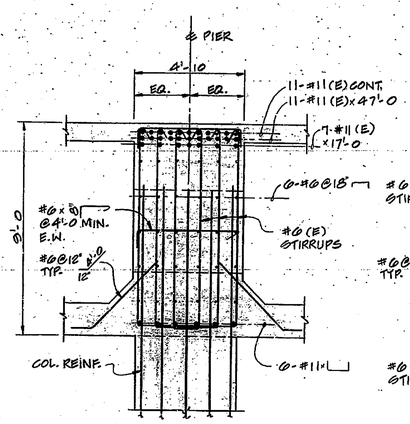

SECTION C
3/8"=1'-0

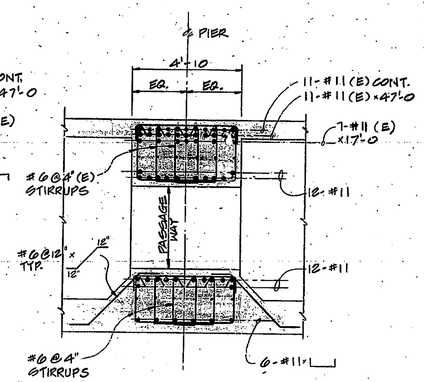

SECTION D
3/8"=1'-0

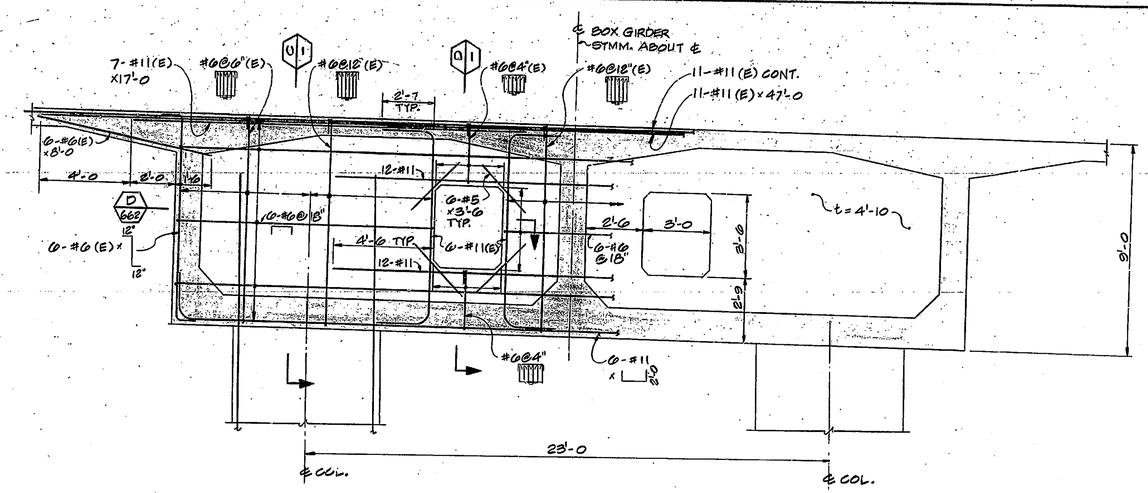

SECTION A DIAPHRAGM AT PIER No. 27'
3/8"=1'-0

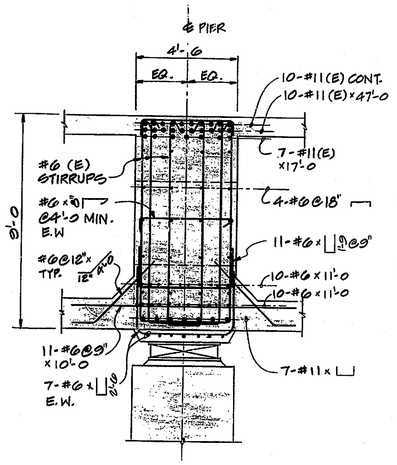

SECTION E
3/8"=1'-0

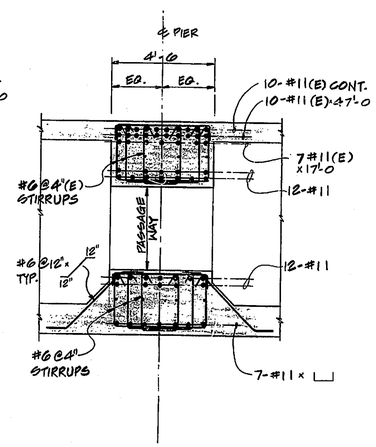

SECTION F
3/8"=1'-0

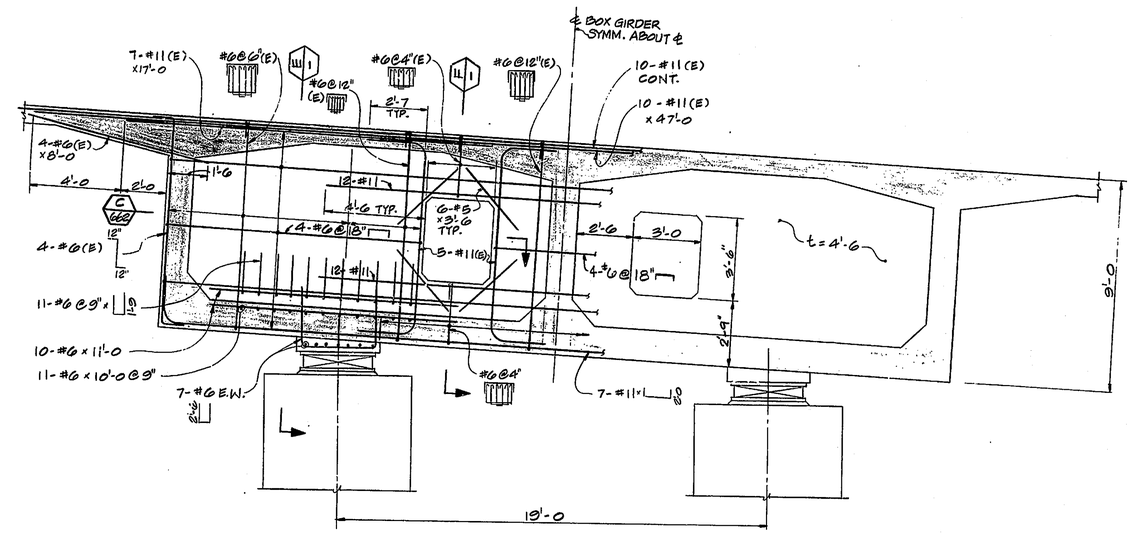

SECTION B DIAPHRAGM AT PIER No. 29'
3/8"=1'-0

NOTE: SAME AS DWG. 610

N.	REVISION	DATE

T. Y. LIN INTERNATIONAL
STRUCTURAL ENGINEERS

REID, QUEBE, ALLISON, WILCOX AND ASSOCIATES INC.
CONSULTING ENGINEERS

WALSH CONSTRUCTION COMPANY
A DIVISION OF GUY F. ATKINSON CO.
DARIEN, CONNECTICUT

SHEET TITLE
DIAPHRAGMS AT PIER No. 27' & 29'

CLINE AVENUE EXTENSION OVER INDIANA HARBOR CANAL
BRIDGE FILE: 912-45-2548 CONTRACT NO. B-11812
INDIANA STATE HIGHWAY COMMISSION

SHEET N.
661