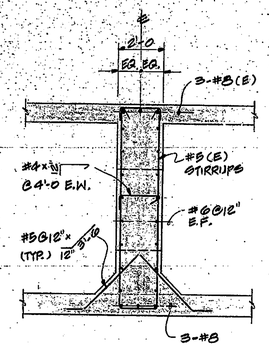

SECTION C
3/8" = 1'-0

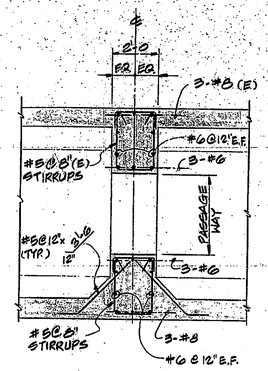

SECTION D
3/8" = 1'-0

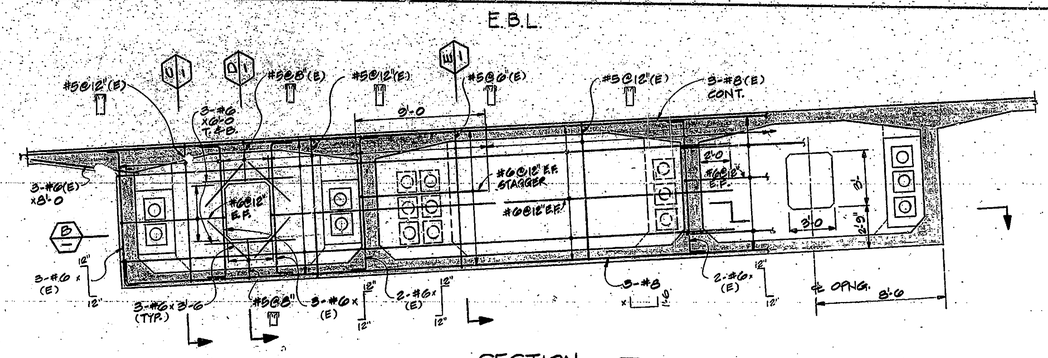

SECTION A
1/4" = 1'-0

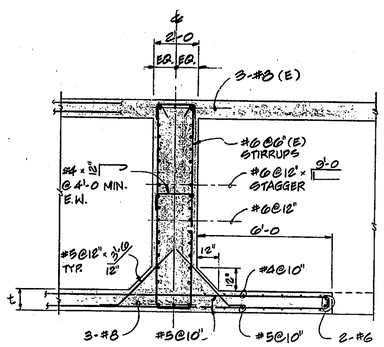

SECTION E
3/8" = 1'-0

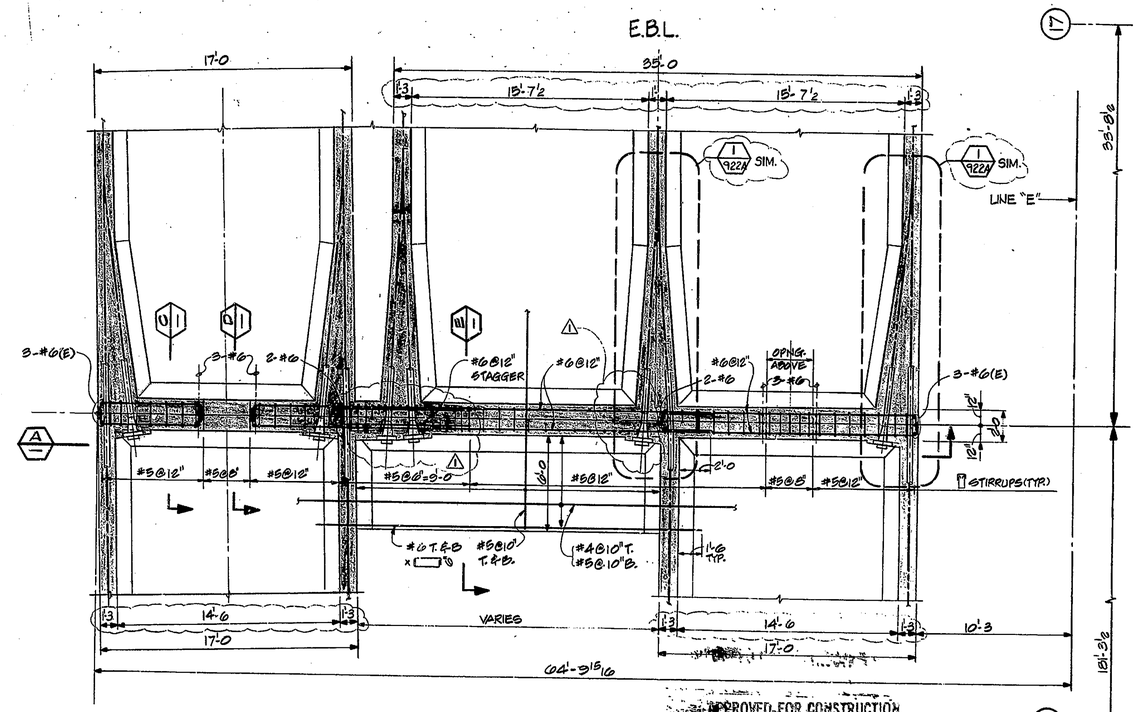

PLAN SECTION B
1/4" = 1'-0

APPROVED FOR CONSTRUCTION
J.D. Martin
J.D. Martin
Engineer of Bridge Design
9-7-82

NOTE: SAME AS DWG. 610

No.	REVISION	DATE
1	ANCHOR CLEARANCE	JAN. '82

NO.	REVISION	DATE

T. Y. LIN INTERNATIONAL
STRUCTURAL ENGINEERS

REID, QUEBE, ALLISON, WILCOX AND ASSOCIATES INC.
CONSULTING ENGINEERS

WALSH CONSTRUCTION COMPANY
A DIVISION OF GUY F. ATKINSON CO.
DARIEN, CONNECTICUT

SHEET TITLE
DIAPHRAGM AT BOX GIRDER TRANSITION – SEGMENT 4

CLINE AVENUE EXTENSION OVER INDIANA HARBOR CANAL
BRIDGE FILE: 912-45-2546 CONTRACT NO. B-11612
INDIANA STATE HIGHWAY COMMISSION

SHEET N.
644