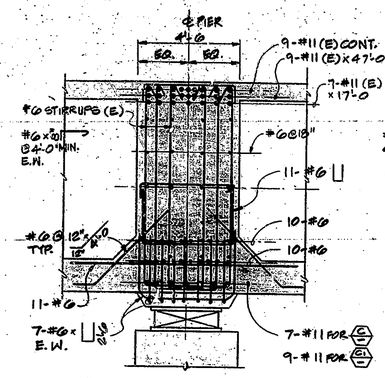


SECTION C C1
3/8"=1'-0

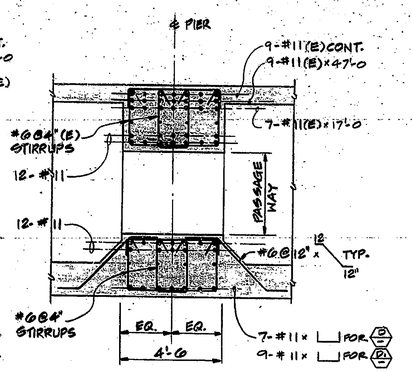


SECTION D D1
3/8"=1'-0

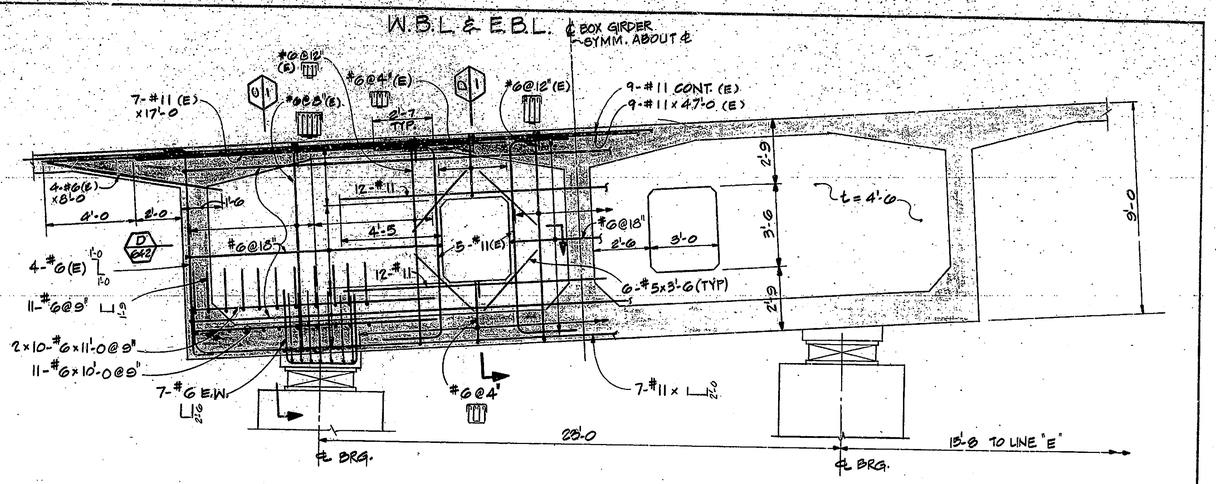


SECTION A DIAPHRAGM AT PIER No. 20, 20', 23, 23', 24 & 24'
3/8"=1'-0

W.B.L. OR E.B.L.

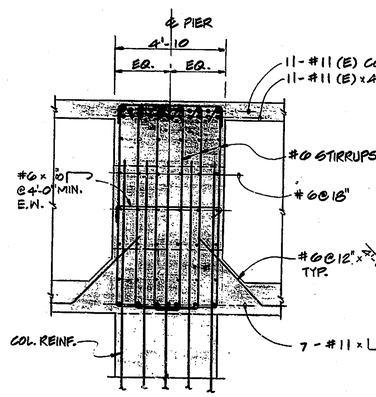


SECTION E
3/8"=1'-0

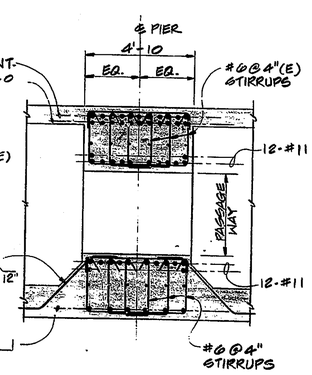


SECTION F
3/8"=1'-0

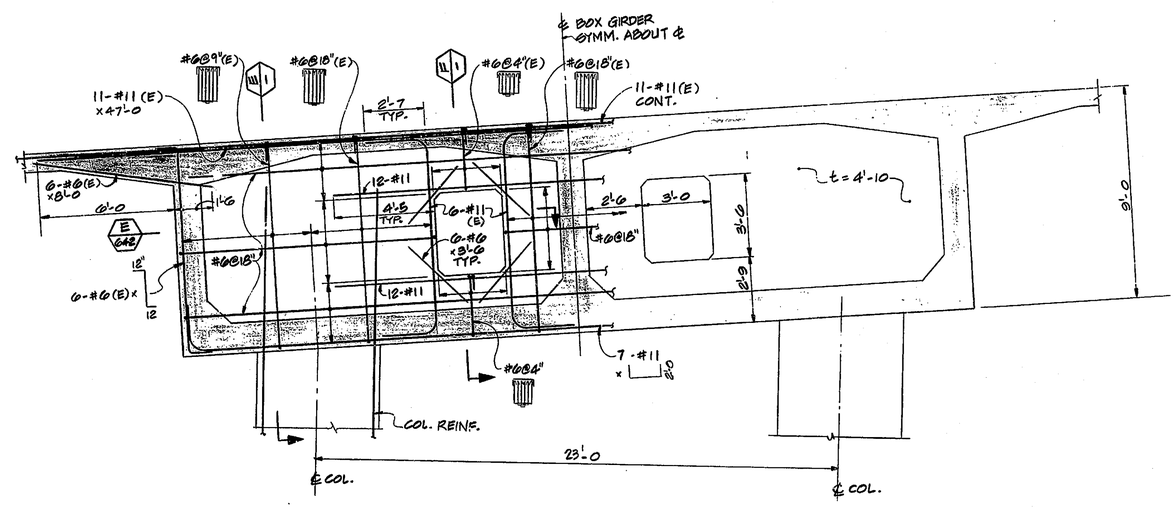


SECTION B DIAPHRAGM AT PIER No. 21, 21', 22 & 22'
3/8"=1'-0

NOTE: SAME AS DWG. 610

| N. | REVISION | DATE |
|---|---|---|

T. Y. LIN INTERNATIONAL
STRUCTURAL ENGINEERS

REID, QUEBE, ALLISON, WILCOX AND ASSOCIATES INC.
CONSULTING ENGINEERS

**WALSH CONSTRUCTION COMPANY**
A DIVISION OF GUY F. ATKINSON CO.
DARIEN, CONNECTICUT

SHEET TITLE
**DIAPHRAGMS AT PIER No. 20, 20', 21, 21', 22, 22', 23, 23', 24 & 24'**

CLINE AVENUE EXTENSION OVER INDIANA HARBOR CANAL
BRIDGE FILE: 912-45-2546 CONTRACT NO. 8-11612
INDIANA STATE HIGHWAY COMMISSION

SHEET N.
**643**