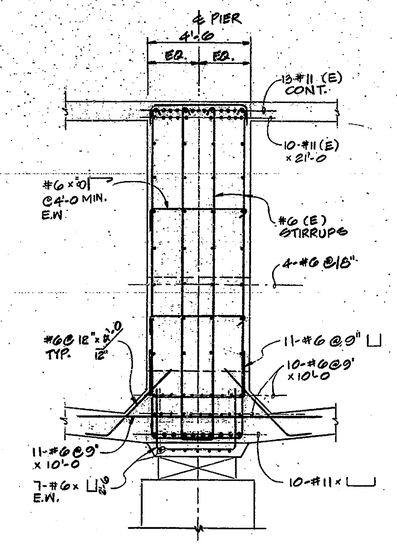

SECTION C
3/8" = 1'-0

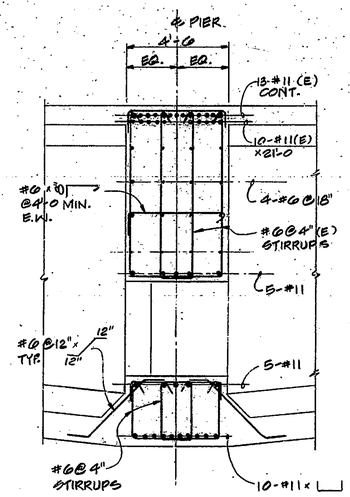

SECTION D
3/8" = 1'-0

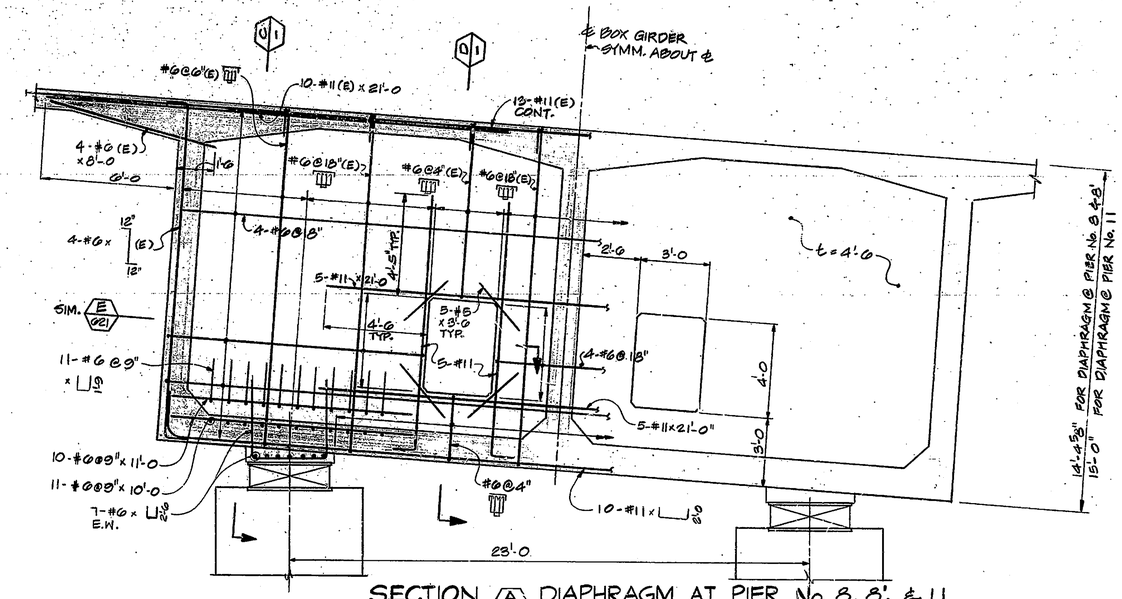

SECTION A DIAPHRAGM AT PIER No. 8, 8', & 11
3/8" = 1'-0

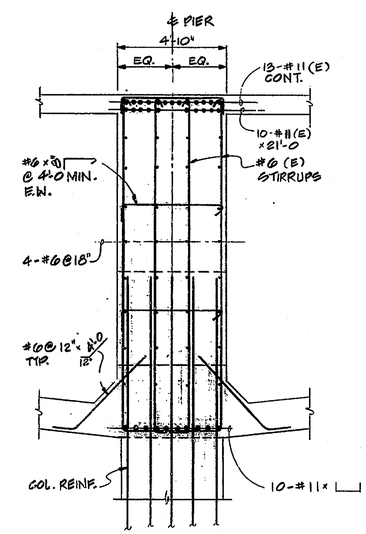

SECTION E
3/8" = 1'-0

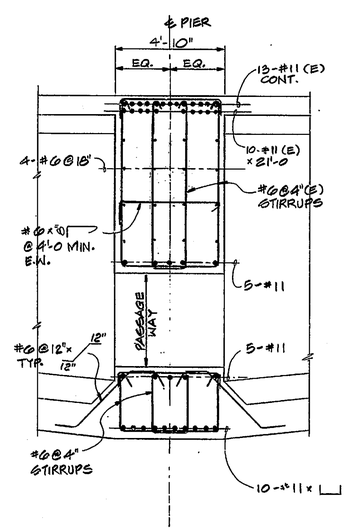

SECTION F
3/8" = 1'-0

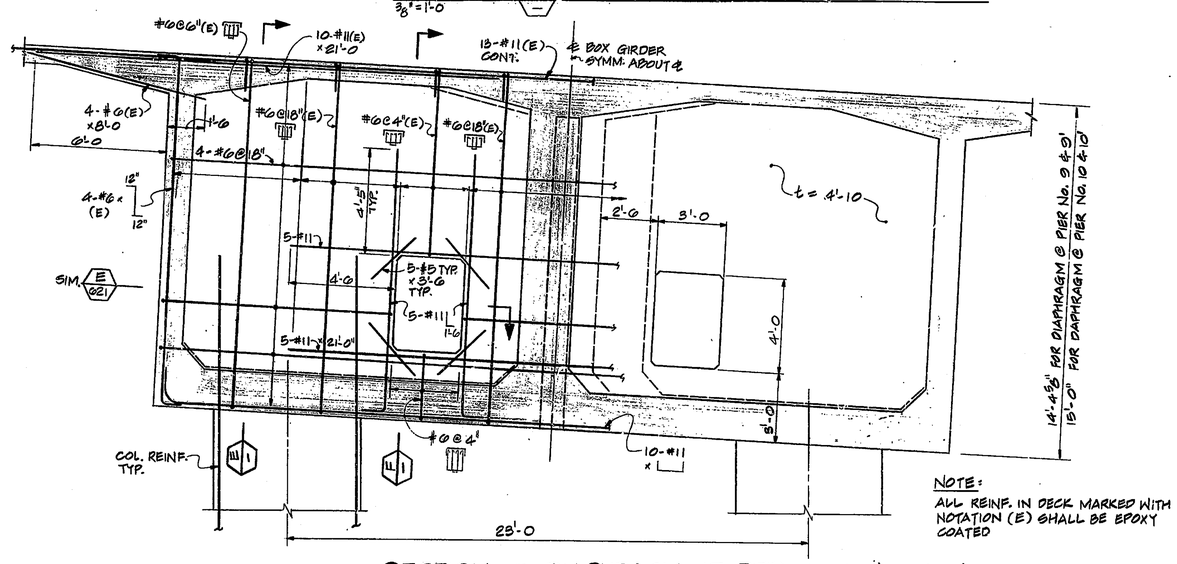

SECTION B DIAPHRAGM AT PIER No. 9, 9', 10 & 10'
3/8" = 1'-0

NOTE:
ALL REINF. IN DECK MARKED WITH NOTATION (E) SHALL BE EPOXY COATED

N.	REVISION	DATE

T. Y. LIN INTERNATIONAL
STRUCTURAL ENGINEERS

REID, QUEBE, ALLISON, WILCOX AND ASSOCIATES INC.
CONSULTING ENGINEERS

WALSH CONSTRUCTION COMPANY
A DIVISION OF GUY F. ATKINSON CO.
DARIEN, CONNECTICUT

SHEET TITLE
DIAPHRAGMS AT PIER No. 8, 8', 9, 9', 10, 10', & 11

CLINE AVENUE EXTENSION OVER INDIANA HARBOR CANAL
BRIDGE FILE: 912-46-2548 CONTRACT NO. B-11612 INDIANA STATE HIGHWAY COMMISSION

SHEET N.
620