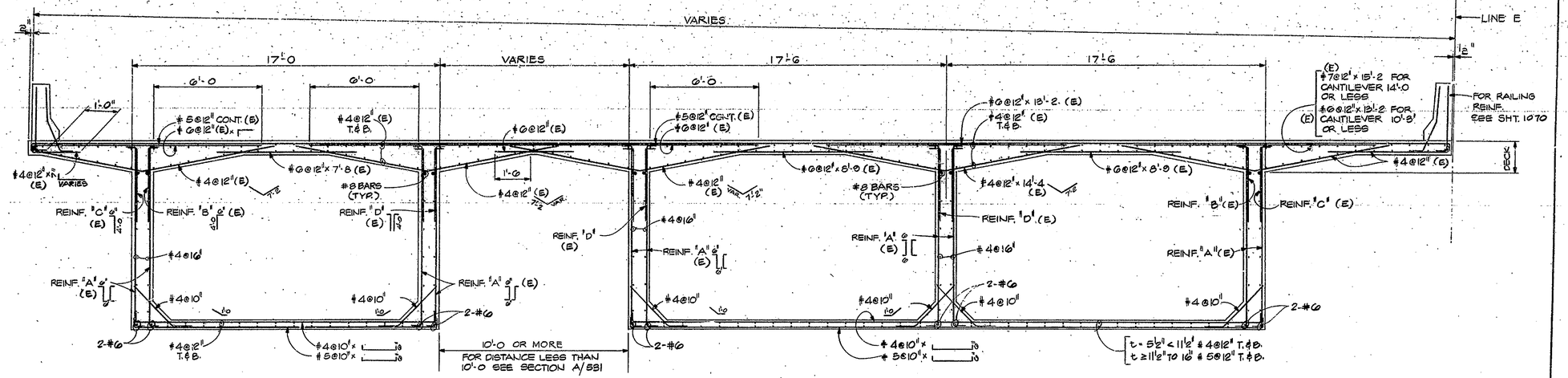

SECTION B
3/8" = 1'-0

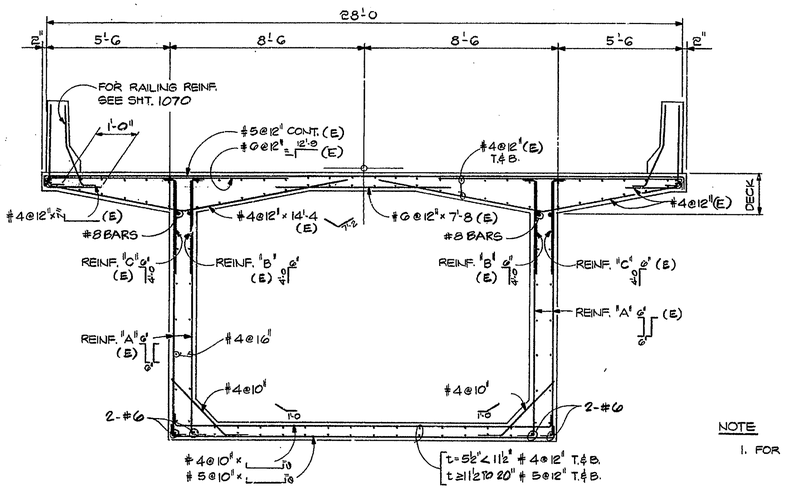

NOTE

1. FOR NOTES SEE SHT 531

SECTION C
3/8" = 1'-0

N.	REVISION	DATE

T. Y. LIN INTERNATIONAL
STRUCTURAL ENGINEERS

REID, QUEBE, ALLISON, WILCOX AND ASSOCIATES INC.
CONSULTING ENGINEERS

T. Y. LIN REGISTERED No. 18265 STATE OF INDIANA PROFESSIONAL ENGINEER

WALSH CONSTRUCTION COMPANY
A DIVISION OF GUY F. ATKINSON CO.
DARIEN, CONNECTICUT

SHEET TITLE
BOX CROSS SECTION REINFORCEMENT DETAILS 2 – SEGMENT 3

CLINE AVENUE EXTENSION OVER INDIANA HARBOR CANAL
BRIDGE FILE: 912-45-2546 CONTRACT NO. B-11612
INDIANA STATE HIGHWAY COMMISSION

SHEET N.
532